Catalogue

2015-2016 edition

HVAC

Water supply | **Sewage**



SALMSON,
INVENTING
THE SOLUTIONS
OF TOMORROW.

Salmson

Water supply

Summary	13
Technical reminders	14
Surface pumps	17
Submersible pumps	303
Booster modules	345

Sewage

Summary	531
Technical reminders	532
Clear water pumps	535
Waste water pumps	587
Pump with macerator	645
Clear water lifting systems	651
Waste water lifting systems	655

HVAC

Summary	675
Technical reminders	676
Wet Rotor Circulators	677
Dry Rotor Circulators	819
Modules	1213

Sanitary Hot water

Summary	1237
Ciculators	1239
Pumps	1265

Equipment

Summary	1269
Control devices	1271
Warning devices	1309
Tanks	1311
Equipment submersible pumps	1371



Our markets


La Défense

Salmson, a leading name in the field of pumps and pumping systems, essentially targets three markets:

- **Building Services**
- **Water Management**
- **Industry**


Sainte Musse hospital

Building Services

From individual houses to collective housing, as well as tertiary sector buildings (hospitals, schools, offices, shops, administrative premises), we offer dedicated solutions for each type of application.

- In France, Salmson is the leading brand in the buildings market segment.


Treatment plant of Tougas

Water Management

From drawing water from a river or a ground water table to returning it to the natural environment, we provide product solutions for every link in this cycle.

- In France, Salmson is a brand which is showing rapid growth in the Water Management standard distribution segment.

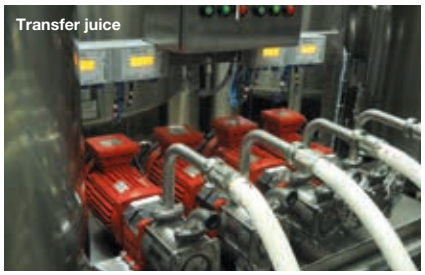
Transfer juice

Industry

The Salmson brand provides solutions tailored to all industrial installation configurations, in applications such as transfer, circulation, boosting, distribution, sewage and waste water treatment.

- In France, Salmson is a brand which specialises in peri-process.

Our fields **of application**

Across these 3 markets, the Salmson brand offers a wide range of products which can be adapted to all types of installation within the scope of

3 main fields of application:

HVAC



Designed for heating, air conditioning and domestic hot water circulation, our range is composed of in-line pumps and high energy efficiency core circulators. This has historically been our brand's field of application.

Water Supply



Depending on the number of residents or occupants in a building, the surface area to be irrigated, or even the current fire protection regulations, Salmson pumps and systems meet all requirements in terms of supply and boosting.

Sewage



From cellar drain pumps and agitators to sewage plants, Salmson markets a wide range of products for draining clean, contaminated and waste water.

Index

A
Acson **1271**
Acson vario **1273**
Alarmson **1309**
Alti-Aqua **351**
Alti-HU **345**
Alti-Nexis advens **451**
Alti-Nexis-V **357**
Alti-Nexis-VE **399**
Aquason AL et PAP **303**
Aquaval **549**

C
CC-HVAC **1295**
Celciux **1247**
Cleanson **1227**
Condenson classic **1233**

D
DIE **979**
DIL **919**

E
Expanson comfort **1213**

F
Floats **1277**

G
Geosun **715**
GET **1049**
GV **583**

H
Hydrobat HPBS **527**
Hydroplus (N-Alti H/N-Alti V) **473**
Hydroplus-E (EBMS) **497**
Hydroplus-E (N-Alti HE/N-Alti VE) **515**
Hydroson **45**

I
IC 8 **337**
Immerson cables **1317**
Immerson D3 **307**
Immerson D4-QC **311**
Immerson S4-S6 **319**
IPAE **1281**
Ixens **1027**

J
Jetson **17**

K
Kidson **1223**

L
Liftson M-Lix **659**
Liftson S **655**
LRE-JRE **859**
LRL-JRL- LRL-U **819**
LRN-JRN **843**

M
MGP **1303**
Mini SDL **645**
Mini SVO **587**
MS lift **1285**
MUH **53**
Multi-H hydromini **175**
Multi-HE hydromini mono **217**
Multi-HE **193**
Multi-HE hydromini tri **209**
Multi-HE mono **185**
Multi-V **221**
Multi-V hydromini **241**
Multi-VE hydromini mono **299**
Multi-VE **255**
Multi-VE hydromini tri **289**
Multi-VE mono **245**
MUV **167**

N
NEC **1265**
Nexis advens **143**
Nexis-V 22 to 52 **87**
Nexis-V 2 to 16 **61**
Nexis-VE **109**
NOE-NOH **1171**
NOES **1163**
NOS **1123**
NRG **1155**
NSB-NSB-S-DSB **1251**
NXL-NYL **677**

P
PBE **1077**
PBS **1057**
Priux home **687**
Priux home B 60-40 **695**
Priux home D **701**
Priux home zoom **709**
Priux master **799**

R
Recupeo home **33**
Recupeo master **37**
Rocsan lix **603**
Rocsan evo **623**

S
S (pump) **563**
Sanitson premium **665**
SCA 408-410 **613**
SCP **1173**
SC-lift **1291**
SCX-DCX collective **727**
SCX-DCX small collective **719**
SHS-SBS **543**
SIE **951**
SIL **895**
Siriux master **755**
Siriux home **681**
Springson **25**
Subsanit 2 **651**
Subson **535**
SVO-SCA 205-206 **593**
SXS **1257**

T
Tanks **1311**
Thermo'clock **1243**
TP-2800 **559**

U
UVO-UCA-UCB **633**

Y
YN 1200 **1283**
YN 3000 E **1287**

Z
Zen Ô home **1239**

Range tables

Water supply

Range	Operating range			Applications				Construction					Fluid type		
	Domestic / Collective	Flow rate (m^3/h)	Manometric head up	Water supply	Rainwater supply	Water extraction	fire fighting	Surface pump	submersible pump	standardized pump	Booster module	EVS [1]	Drinking water ACS	Non drinking water	aggressive water
Alti-Aqua	D/C	14	68	x							x			x	
Alti-HU	D/C	16	60	x							x		x	x	
Alti-Nexis advens	C	78	160	x							x	x	x	x	
Alti-Nexis-V	C	320	240	x							x		x	x	
Alti-Nexis-VE	C	320	250	x							x	x	x	x	
Aquason AL & PAP	D	16	87	x		x			x					x	
Hydrobat HPBS	C	55	62				x				x			x	
Hydroson	D	8	55	x				x					x	x	
Hydroson hydromini	D	8	55	x							x		x	x	
Immerson IC 8	C	300	400			x			x					x	x
Immerson D3	D	2,6	125	x		x			x					x	
Immerson D4	D	24	300	x		x			x					x	
Immerson S4 - S6	C	78	420	x		x			x				x	x	
Jetson	D	5	50	x				x						x	
Jetson hydromini	D	5	50	x							x			x	
MUH	C	13	67	x				x					x	x	
Multi-H	C	25	70	x				x					x	x	
Multi-H hydromini	D/C	25	70	x							x		x	x	
Multi-HE	C	34	96	x				x				x	x	x	
Multi-HE hydromini	D/C	10	80	x							x	x	x	x	
Multi-V	C	140	240	x				x					x	x	
Multi-V hydromini	C	8	60	x							x		x	x	
Multi-VE	C	140	250	x				x				x	x	x	
Multi-VE hydromini	C	20	125	x							x	x	x	x	
MUV	C	14	137	x				x					x	x	
N-Alti-HE	C	140	350	x							x	x	x	x	
Nexis advens	C	80	240	x				x				x	x	x	
Nexis-V	C	80	255	x				x					x	x	
Nexis-VE	C	80	240	x				x				x	x	x	
NOE - NOH	C	3000	140	x						x				x	
NOES	C	1600	105	x						x				x	
NOLH	C	1800	140	x						x				x	
Norma-V	C	200	100	x										x	
NOS	C	450	150	x						x			x*	x	
PBS	C	375	105	x						x				x	
Récupéo home	D	5	42		x						x			x	
Récupéo master	C	16	58		x						x			x	
SCP	C	17000	170	x			x			x			x	x	
Springson	D	8	55	x				x						x	
Springson hydromini	D	8	55	x							x			x	

* On demand

1) Electronic variation speed (EVS)

Range tables

HVAC

Range	Operating range			Applications								Construction					
	Domestic / Collective	Flow rate (m^3/h)	Manometric head up (mCE)	Hot water circulation	Cold water circulation	Domestic hot water	sludging-degassing modules	Pressure maintenance	Condensates lifting	Superheated water circulation	Viscous fluid circulation	Circulator	Inline pump	Standardized pump	Module	Volumetric pump	ESV [1]
Celciux	C	2,5	5			x						x					
Cleanson	C	10 to 900 m^3h	-				x								x		
Expanson comfort	C	Up to 13 000 kW	80					x							x		
Géosun	D	5,5	11	x	x							x					x
GET	C	80	38	x						x			x				
GV	C	17	21						x								
Ixens	C	120	51	x	x								x				x
Kidson	C	0,5 to 40 m^3h	-				x								x		
LRE-JRE	C	170	29	x	x	x							x				x
LRL-JRL	C	120	31	x	x	x							x				
LRN-JRN	C	200	52	x	x								x				
NEC	C	6,5	7			x							x				
NOE-NOH	C	3 000	140	x	x									x			
NOS - NOES	C	1 800	150	x	x									x			
NRG	C	250	36	x	x									x			
NSB - NSB-S - DSB	C	6	6,5			x						x					
NXL - NYL	D	6	4	x	x							x					
PBE	C	380	85	x	x									x			x
PBS	C	375	105	x	x									x			
Priux home	D	5	8	x	x							x					x
Priux master (-D)	C	60	17	x	x							x					x
SCP	C	17 000	245	x	x									x			
SIE-DIE	C	800	65	x	x								x				x
SIL-DIL	C	1 100	105	x	x								x				
Siriux home	D	4	6	x	x							x					x
Siriux master (-D)	C	108	12	x	x							x					x
SCX-DCX small collective	C/D	7,5	14									x					
SCX-DCX collective	C	19	68									x					x
SXS	C	65	9			x						x					x
Tanks	D/C	-	-					x									
Thermo'clock	C	0,35	1,05			x						x					
Zen'Ô home	C	0,35	0,9			x						x					

1) Electronic variation speed (EVS)

Range tables

Sewage

Range	Operating range			Construction					Fluid type				
	Domestic / Collective	Flow rate (m^3/h)	Manometric head up (mCE)	Surface pump	Lineshaft pumps	submersible pump	Submersible macerator pump	Lifting unit	Clear water	Infiltration water	Rain water	worksite Water	wastewater
Aquaval	C	150	41			X			X	X	X	X	
GV / CS	C	50	33		X				X	X	X		
Liftson M-Lix	D/C	49	22					X					X
Liftson S	D	55	6,5					X	X	X	X		X
Mini SDL	D/C	16	38				X						X
Mini SVO	D/C	22	10			X				X	X		X
Rocsan evo	D/C	90	29			X				X	X		X
Rocsan lix	D/C	90	29			X				X	X		X
Sanitson premium	D/C	62	25					X					X
Subsanit 2	D	9	8					X	X				
Subson	D	16	11			X			X	X	X		
Subson premium	D	15	11			X			X	X	X		
SVO-SCA	C	180	22			X				X	X		X
TP 2800	C	74	30	X					X	X	X	X	
S (pump)	C	500	60	X					X	X	X	X	
UVO-UCA-UCB	C	360	62			X			X	X	X		X

Icons

EVS	Product with electronic speed technology	Ex	ATEX-compliant product
Certified ACS	Certified product ACS: Sanitary Conformity Certification	M M M	6 / 4 / 2 poles
		▲ ▲+▲	Single / double pump

Assistance
Selection and sales tools

Committed to accompanying you in your development, we provide you with an extensive range of tools:
- Technical data enabling you to find all the information you need for preparing your projects.
- Tools to help you choose the best suited product.
- Tailor-made solutions for each specific issue wichever industry is concerned.

The tools in this section can be accessed from the home page of our website:
www.salmson.com

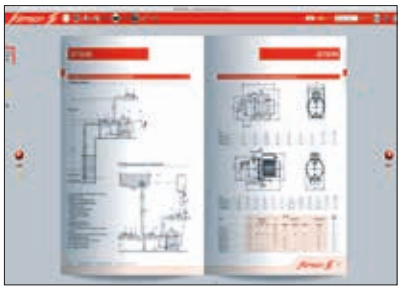
E-catalogue

E-catalogue

Technical reference material covering all of our ranges.
In this browsable version of our online catalogue you can save all or part of its contents in PDF format.

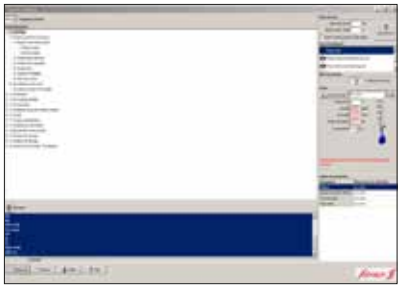
Selecson

SELECSON

The product selection tool for our pumps and pumping systems.
- It brings together all the key product families: **HVAC /Water Supply / Sewage.**
- It features an intuitive interface, available in 4 languages: **French/English/Italian/Spanish.**
- It includes 2-D/3-D plans, and enables users to switch to the Interchangeability guide.



CAD-library

CAD-library

Our CAD library gathers information for over 90 ranges, featuring more than 30,000 plans for our pumps and pumping systems with 2-D or 3-D views.

This CAD library is systematically updated for any new product.



Interchangeability guide

Interchangeability guide

The replacement tool for circulators and in-line pumps.
- The Interchangeability guide enables you to quickly find the right replacement product from our range of Salmson circulators and in-line pumps for the main market brands.
- It provides all the equivalencies for high efficiency products: circulators and pumps with electronic speed variation.

GENERAL TERMS OF SALE - FRANCE AND ABROAD

INTRODUCTION

These Terms and Conditions of sale form an integral part of the contract and override any document to the contrary of the Purchaser, its authorised agents or shippers, which has not been accepted in writing by the Vendor. Any modifications that the parties may make to these Terms and Conditions require an express, written agreement.

1 - PLANS AND DOCUMENTS

The weights, technical characteristics, price performance and other data shown in the catalogues, prospectus, circulars, advertisements, engravings, price lists and any other medium are only indicative. This data is only contractually binding if the contract expressly refers thereto.

2 - BIDS

The bids are drawn up on the basis of the specifications provided by the Purchaser. The Vendor is only bound by the written commitments made on its headed paper and signed by an authorised representative.

Except in the event of a specific agreement, the bid shall be valid for one month.

3 - TRAINING AND PERFORMANCE OF THE CONTRACT

The contract shall be deemed to have been concluded by its signature by both parties or even by the written acceptance by the Vendor of the order placed by the Purchaser. The performance of the contract shall only begin after collection of the deposit stipulated in the order and, as the case may be, after receipt of the authorisations of the official export and import bodies, as well as after receipt of the other documents stipulated in the contract, valid and usable by the Vendor.

The commitments of the parties shall be executed in accordance with the terms of the contract and in good faith. Any modification must be the subject of a written protocol accepted by the Vendor.

4 - VERIFICATONS AND TESTS

Any verifications, tests or inspections requested by the Purchaser are incumbent on it.

5 - PRICE

Except in the event of a specific agreement, the prices are tax excluded for the equipment without specific packaging, according to the Terms and Conditions of delivery stipulated in the acknowledgement of receipt of the order. They do not include the duties, taxes, additional costs or charges of any kind whatsoever, payable outside France. Except in the event of a stipulation to the contrary, the prices are expressed in the legal tender of France.

For any order, the net amount of which, excluding taxes, is less than €600, a contribution to the delivery costs shall be applied according to the schedule in effect.

6 - PAYMENT

6.1 Payment terms and conditions

In accordance with Act No. 2001-420 of 15 May 2001, payment must be received by the Seller at the latest on the 30th day after the handover date, unless agreed otherwise in writing between the parties.

Under no circumstances can the contractual payment date be unilaterally called into question by the Buyer under any pretext whatsoever, including in the event of dispute. Early payments will be made with no discount, unless agreed otherwise in writing.

6.2 Late payment

In accordance with Acts No. 2001-420 of 15 May 2001, 2008-776 of 4 August 2008, and 2012-387 of 22 March 2012, any late payment will result, without prior formal notice, in the application of late payment interest equal to the interest rate applied by the European Central Bank to its most recent refinancing operation plus 10 percentage points, calculated according to the provisions of Article L.441 6 of the Commercial Code, and in the payment of inclusive compensation of forty (40) euros for collection expenses. Additional compensation for collection expenses may be requested by the Seller, with justification. Any late payment on a due date or deterioration of the Buyer's financial situation as determined by a credit insurance establishment will result in the expiry of the loan term, with all of the sums due becoming immediately payable. The fact that the Seller avails itself of one and/or the other of these provisions does not deprive it of the right to implement the property provision clause contained in Article 13. In the event of late payment, the Seller has the right to withhold the manufactured products and associated supplies.

6.3 Automatic debit practices

The Buyer will refrain from any unlawful automatic debit or credit, and in general, will refrain from invoicing the Seller all sums that have not formally been accepted by the latter, for any reason whatsoever.

7 - DELIVERY TIME

The time runs from the day when the conditions necessary for the performance of the contract are fulfilled. The Vendor is discharged by right from any commitment concerning the delivery times in the event where the Purchaser does not comply with one or several of its obligations under the contract or in the event of force majeure or of events or causes outside of the control of the Vendor making normal performance of its obligations impossible. As far as possible, the latter shall keep the Purchaser informed of these events in due course. Late delivery penalties are only due if they are accepted in writing by the Vendor and they exclude any other compensation which the Purchaser may claim.

8 - PACKAGING

The packaging eventually requested is always payable by the Purchaser, in addition to the agreed price, and is not taken back by the Vendor, except in the event of a specific stipulation.

9 - DELIVERY

Except in the event of a specific stipulation in the contract, the deliveries mean goods (products and accessories) delivered on an unloaded truck, in their standard packaging. The delivery conditions are stipulated at the time of the order and are stated on the Acknowledgement of receipt of the Order. In the event of sale "Ex Works", the risks relating to the goods not removed, the operations, subsequent to the supplying at the factory and, in particular, of shipping, handling, storage and delivery to the site are incumbent on and at the expense and responsibility of the Purchaser.

In all cases, it is the responsibility of the Purchaser to verify all the shipments on arrival, to mention, if need be, reservations to the shipper within 48 hours and to immediately inform Vendor thereof. Any mention of the INCOTERMS shall mean reference to their latest version in effect at the time of the conclusion of the contract.

10 - INTELLECTUAL PROPERTY AND CONFIDENTIALITY

10.1 – Intellectual property and knowhow of the documents and products

All the intellectual property rights as well as the know-how incorporated in the documents sent, the products delivered and the services performed remain the exclusive property of the Vendor.

Any transfer of an intellectual property right or know-how must be the subject of a specific contract. The Vendor reserves the right to use its know-how and the results of its research and development work.

All the plans, descriptions, technical documents or estimates provided to the other party are communicated within the framework of a loan for use, the purpose of which is the assessment and the discussion of the Vendor's commercial bid. They must not be used by the other party for other purposes. These documents must be returned to the Vendor at its first request.

10.2 – Confidentiality clause

The parties reciprocally undertake to comply with a general confidentiality obligation involving any confidential information, verbal or written, whatsoever and whatever the medium thereof (discussion reports, plans, exchanges of computerised data, activities, installations, projects, know-how, prototypes produced at the request of the Purchaser, products, etc.) exchanged within the framework of the preparation and the performance of the contract, except the information which is generally known to the public or that which shall become so otherwise than by the action of the Purchaser.

Accordingly, the parties undertake to :

- keep strictly secret all the confidential information and, in particular, never to disclose or communicate in any way whatsoever, directly or indirectly, all or part of the confidential information to anyone whatsoever, without the prior, written authorisation of the other party
- not to use all of part of the confidential information for purposes or for an activity other than the performance of the contract
- not to make any copy or imitation of all or part of the confidential information.

The parties undertake to take all the measures necessary to ensure compliance with this confidentiality obligation throughout the term of the contract and even after its expiry and guarantee compliance with this obligation by all of their employees and subcontractors or other contracting parties. This obligation is an obligation for results.

10.3 – Guarantee clause in the event of forgery

Each of the parties guarantees that the elements which it has provided or designed for the performance of the contract (plans, specifications, processes and their conditions of application, etc.) do not use the intellectual property rights or know-how held by a third party. They guarantee that they can freely use them without infringing any contractual or statutory obligation.

They mutually guarantee each other against the direct or indirect consequences of any legal action for civil or criminal liability resulting from legal action for forgery or unfair competition.

11 - GUARANTEE AND LIABILITY

11.1 – Contractual guarantee

Except in the event of a stipulation to the contrary, the Vendor offers a guarantee of 24 months from the date of manufacturing. This period is extended to 36 months for the circulators. The guarantee means a mechanical guarantee and covers, at the Vendor's discretion, defects in materials and manufacturing. To invoke the guarantee, the Purchaser must notify the Vendor in writing of the defects within 8 days from their discovery, which it attributes to the product and specify the operating conditions existing at the time of the recording of these defects. Beyond this period, the guarantee can no longer be invoked.

The guarantee only consists, at the Vendor's choice, of the repairing or the replacement of the products recognised to be defective by it and sent to its workshops. It does not cover the travel, transport or shipping expenses and the costs of removal/reinstallation such as the handling costs.

11.2 – Liability

The Vendor's liability is strictly limited to compliance with the contractual specifications. The Vendor must produce the product or service requested by the Purchaser in compliance with the professional standards of its profession. The Vendor's liability shall be limited to the direct material damage caused to the Purchaser which may result from mistakes attributable to the Vendor on the performance of the contract. The Vendor shall not be obliged to compensate for intangible or indirect damage such as operating losses, loss of profits, opportunity cost or commercial prejudice or theoretical losses.

The Vendor is not obliged to compensate for the damaging consequences of mistakes committed by the Purchaser or of third parties concerning the performance of the contract.

The Vendor is not liable for the damage resulting from the use by the Purchaser of technical documents, information or data emanating from the Purchaser or imposed by the latter.

The Vendor's liability, all causes included with the exception of physical injuries or serious professional misconduct, is limited to the amount collected for the goods or service in question on the day of the occurrence of the event involving the Vendor's liability. The Purchaser guarantees the waiver of the right of recourse of its insurers or third parties contractually bound to it against the Vendor or its insurers beyond the limits and exclusions stipulated above.

11.3. – Exclusions of guarantee and liability

The guarantee does not apply and any liability of the Vendor is excluded in the following cases :

- parts subject to wear and tear
- installation or use not in accordance with professional standards or the stipulated technical specifications
- non-compliance with the installation, use or maintenance instructions
- supervision, storage or maintenance defects
- modification or intervention of the Purchaser or of a third party on the product not authorised by the Vendor or carried out with parts and/consumable items not from the Vendor.

The guarantee does not apply and any liability of the Vendor is excluded in the event of non-payment of the Purchaser and it cannot use the activation of guarantees to suspend or defer its payments.

12 - RETURN OF THE EQUIPMENT

The Vendor is not obliged to take back equipment which may be returned to it for a reason not involving its liability. In the event where it should accept it exceptionally and solely during a period of six months from the invoicing of the equipment, the buyback shall be made at the price invoiced, minus 20% and the costs of repair. The physical return of the equipment shall only be made after acceptance by the Vendor of a return form issued by the Purchaser providing the description of the equipment and the reasons for the return to the Vendor. The equipment must be returned to the Vendor according to the Incoterm "Returned with duty paid to its factory".

13 – OWNERSHIP RESERVATION

The Vendor retains the ownership of the goods sold until the actual collection of all the amounts due. The failure to pay any of the instalments can entail the claiming of these goods. It is recalled that the remittance of bills or any other instrument creating an obligation to pay does not constitute a payment. Nevertheless, the transfer of the risks to the Purchaser takes place at the delivery of the equipment as stipulated above, and the cost of the corresponding insurance policies is incumbent on the Purchaser. The Purchaser cannot, for any reason whatsoever, proceed with the resale of the goods for as long as the price thereof shall not have been fully paid to the Vendor. The Purchaser can in no event pledge the goods or use them as collateral.

14 - TERMINATION

In the event of breach by the Purchaser with one of its contractual obligations, and notably in the event of non-compliance with one or several payment instalments, the Vendor can terminate the contract by right after formal notice to perform has been sent to the Purchaser, by registered letter with acknowledgement of receipt, which has remained without effect for eight days.

15 - EVOLUTION OF TRADE RELATIONS

The sales conditions granted to the Purchaser do not constitute a commitment by the Vendor as to future terms and conditions. In the event, in particular, of a payment incident, of serious doubt about the solvency of the Purchaser or of any commercial practice prejudicial to the Vendor, the latter can propose new conditions or not accept new orders.

16 - SUB-CONTRACTING

The Vendor has the right to sub-contract all or part of the studies, manufacturing, supplies, services and works which are the subject to the contract. The Purchaser cannot transfer the contract without the prior, written agreement of the Vendor.

17 - FORCE MAJEURE

Neither of the parties to this contract can be held liable for its delay or its failure to perform one of the obligations incumbent on it under the contract if this delay or this failure are the direct or indirect effect of an event of force majeure understood within the meaning of French jurisprudence, such as the occurrence of a natural disaster, earthquake, storm, fire, flooding, conflicts, war, attacks, labour conflicts, total or partial strike, a binding injunction of the public authorities (ban on importing, embargo), operating of shipping accidents, breakdown of machines, explosion or serious deficiencies of Vendors. Each party shall inform the other party immediately of the occurrence of an event of force majeure of which it shall have knowledge and which in its eyes is capable of affecting the performance of the contract.

18 - GOVERNING LAW AND DISPUTES

The contract is governed by French law. In the event of a sale in France, all the disputes shall lie within the exclusive jurisdiction of the Court in the jurisdiction of which the registered office of the Vendor is located. In the event of a sale outside of France, any dispute shall be settled definitively according to the Rules of Conciliation and Arbitration of the International Chamber of Commerce, including the Rules for pre-arbitration referral, by one or three arbitrators appointed in accordance with these rules. The arbitration language shall be French and the place of arbitration shall be Paris.

November 2014 edition

A FRENCH VERSION OF THESE GENERAL SALES TERMS IS AVAILABLE UPON REQUEST.

THE FRENCH VERSION OF OUR GENERAL SALES TERMS SHALL BE OVERRIDING IN THE EVENT OF A DIFFERENCE IN INTERPRETATION WITH THE ENGLISH VERSION.

Water supply

Technical reminders 14

Surface pumps

- Jetson 17
- Springson 25
- Récupeo home 33
- Récupeo master 37
- Hydroson 45
- MUH 53
- Nexis-V 2 to 16 61
- Nexis-V 22 to 52 87
- Nexis-VE 109
- Nexis advens 143
- MUV 167
- Multi-H 175
- Multi-HE 1~ 185
- Multi-HE 193
- Multi-HE hydromini (3~) 209
- Multi-HE hydromini (1~) 217
- Multi-V 221
- Multi-V hydromini 241
- Multi-VE (1~) 245
- Multi-VE (3~) 255
- Multi-VE hydromini (3~) 289
- Multi-VE hydromini (1~) 299

Submersible pumps

- Aquason 303
- Immerson D3 307
- Immerson D4 - QC 311
- Immerson S4 - S6 319
- IC 8 337

Modules

- Alti-HU 345
- Alti-Aqua 351
- Alti-Nexis-V 357
- Alti-Nexis-VE 399
- Alti-Nexis advens 451
- Hydroplus (N-Alti H/N-Alti V) 473
- Hydroplus-E (N-Alti HE/N-Alti VE) 497
- Hydroplus-E (EBMS) 515
- Hydrobat HPBS 527

WATER SUPPLY

BOOSTER PUMPS

How to determine the flow rate

Number of inhabitants	1 to 5 people			6 to 10 people	
Watering - Garden surface to cover (m^2)	0 to 400	400 to 800	800 to 1000	0 to 500	500 to 1000
Pump flow (m^3/h)	2	3,5	4	3	5

How to determine the pressure

Geometrical height (m) = HA + HR
HA: height between the lowest water level and the pump suction.
HR: height between the pump discharge and the highest point of use.

Friction losses (mCE)
Pressure drop caused by friction in the piping network (accessories + suction)

Residual pressure (mWC)
Pressure required for taps or water sprinklers, are mostly as follows:
• 1.5 bar (15 mWC) for residential water supply
• 2.5 bar (25 mWC) for water sprinkling

Available pressure (mWC)
The pressure available at the pump suction port. More often coming from the city network or from the water tank located above the pump.
For a negative suction installation, the available pressure is negative.

SURFACE PUMPS

Geometrical height
+
Friction losses
+
Residual pressure
-
Available pressure
=
Total dynamic head

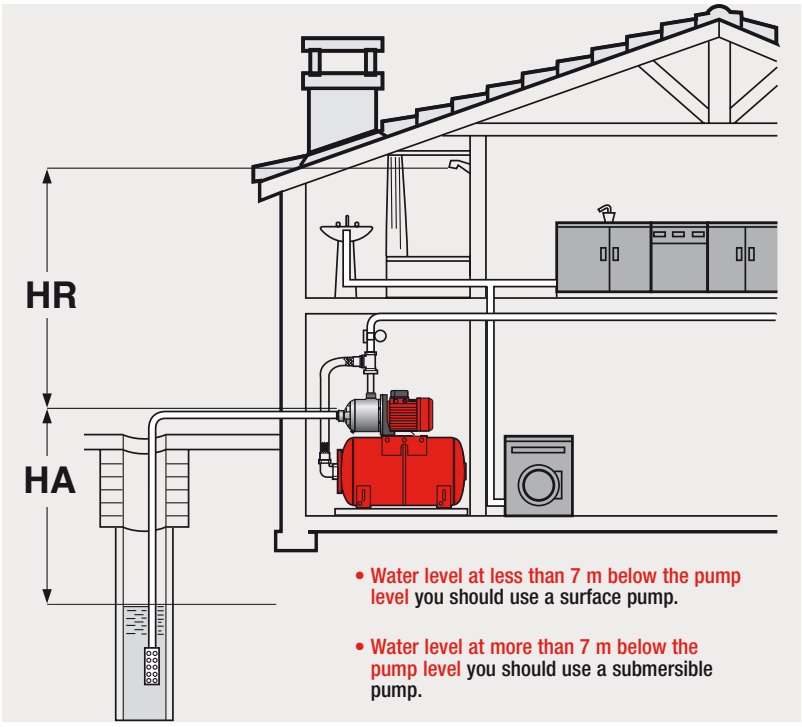

- Water level at less than 7 m below the pump level you should use a surface pump.
- Water level at more than 7 m below the pump level you should use a submersible pump.

BOREHOLE PUMPS

The pump has always a positive suction so suction HA = 0
+
Friction losses
+
Residual pressure
=
Total dynamic head

The values provided in this chapter are suitable for 90% of the applications. They are given as a guideline only and should not replace a detailed study.

SELECTION GUIDE

Water supply

This selection guide can be used as an initial technical approach, but absolutely not supersedes a technical specific study

					Negative suction pump		
Type of installation	Number of inhabitants + garden surface to cover	Flow m^3/h	HMT	Power supply	Manuel	Automatic	Pressure boosting
Negative suction	1 to 5 pers, 0 to 400 m^2	2 m^3	30 mCE	Mono	Jetson 2 M	Jetson Pac 2	Jetson hydromini 2M
				Tri	Jetson 2 T	x	x
	1 to 5 pers, 0 to 400 m^2	2 m^3	35 mCE	Mono	Springson 204 M	Springson Pac 204 M	Springson hydromini 204 M
				Tri	Springson 204 T	x	x
	1 to 5 pers, 0 to 800 m^2	3 m^3	20 mCE	Mono	Jetson 2 M	Jetson Pac 2	Jetson hydromini 2M
				Tri	Jetson 2 T	x	x
	1 to 5 pers, 0 to 800 m^2	3 m^3	35 mCE	Mono	Springson 205 M	Springson Pac 205 M	Springson hydromini 205 M
				Tri	Springson 205 T	x	x
	1 to 5 pers, 800 to 1000 m^2	4 m^3	40 mCE	Mono	Springson 405 M	Springson PAC 405 M	Springson Hydromini 405 M
				Tri	Springson 405 T	x	x
	6 to 10 pers, 500 to 1000 m^2	5 m^3	40 mCE	Mono	Springson 405 M	Springson PAC 405 M	Springson Hydromini 405 M
				Tri	Springson 405 T	x	x

					Positive suction pump	
Type of installation	Number of inhabitants + garden surface to cover	Flow m^3/h	HMT	Power supply	Manuel	Pressure boosting
Positive suction	1 to 5 pers, 0 to 400 m^2	2 m^3	35 mCE	Mono	Hydroson 204 M	Hydroson hydromini 404 M
				Tri	Hydroson 204 T	x
	1 to 5 pers, 0 to 800 m^2	3 m^3	35 mCE	Mono	Hydroson 205 M	Hydroson hydromini 205 M
				Tri	Hydroson 205 T	x
	1 to 5 pers, 800 to 1000 m^2	4 m^3	45 mCE	Mono	Hydroson 405 M	Hydroson hydromini 405 M
				Tri	Hydroson 405 T	x
	6 to 10 pers, 500 to 1000 m^2	5 m^3	40 mCE	Mono	Hydroson 405 M	Hydroson hydromini 405 M
				Tri	Hydroson 405 T	x

					Pits pump	
Type of installation	Number of inhabitants + garden surface to cover	Flow m^3/h	HMT	Power supply	Manuel	Automatic
Pits	1 to 5 pers, 0 to 400 m^2	2 m^3	35 mCE	Mono	Aquason 304M	Aquason 304M AL PAP
				Tri	x	x
	1 to 5 pers, 0 to 800 m^2	3 m^3	40 mCE	Mono	Aquason 306 M	Aquason 306 M AL PAP
				Tri	Aquason 306 T4	x
	1 to 5 pers, 800 to 1000 m^2	4 m^3	40 mCE	Mono	Aquason 903 M	D4-0409-MP-C-PAP
				Tri	Aquason 903 T4	x
	6 to 10 pers, 500 to 1000 m^2	5 m^3	35 mCE	Mono	Aquason 903 M	D4-0409-MP-C-PAP
				Tri	Aquason 903 T4	x

					Pits pump	
Type of installation	Number of inhabitants + garden surface to cover	Flow m^3/h	HMT	Power supply	Manuel	Automatic
Boreholes	1 to 5 pers, 0 to 400 m^2	2 m^3	45 mCE	Mono	D4-0407-MP-C	D4-0407-MP-C-PAP
				Tri	D4-0407-T4-C	x
	1 to 5 pers, 0 to 800 m^2	3 m^3	70 mCE	Mono	D4-0414-MP-C	D4-0414-MP-C-PAP
				Tri	D4-0414-T4-C	x
	1 to 5 pers, 800 to 1000 m^2	4 m^3	65 mCE	Mono	D4-0414-MP-C	D4-0414-MP-C-PAP
				Tri	D4-0414-T4-C	x
	6 to 10 pers, 500 to 1000 m^2	5 m^3	70 mCE	Mono	D4-0813-MP-C	x
				Tri	D4-0813-T4-C	x

OPERATING RANGES

Flow rates of up to:	**5 m³/h**
Max. manometric head:	**50 mCE**
Operating pressure:	**6 bar**
Max. water temperature:	**+ 35°C**
Max. ambient temperature:	**+ 40°C**
DN (nominal diameter) of port:	**G1**
Max. suction head :	**8 m**

JETSON

STAINLESS STEEL, SELF-PRIMING JET PUMP

4 versions: standard, portable, automatic and hydromini

50 Hz

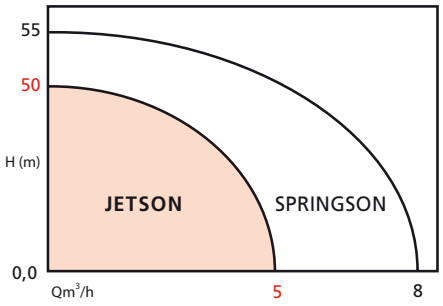

APPLICATION

- Distribution of clean, non-muddy water and rainwater.
- Domestic irrigation.
- Watering.
- Cleaning.

BENEFITS

- **Robust construction: 304 stainless steel impeller**
- **Ready for pumping: supplied with an electric cable (1.5 m), plug, switch and handle (P version).**
- **Over-designed motor (>100,000 cycles).**
- **Automatic priming to 8 m**



• JETSON PAC automatic version



• Hydromini Jetson



• JETSON portable version

JETSON

DESIGN

• Hydraulic part

- Horizontal, venturi system, self-priming pump.
- Axial intake and vertical, upward output.
- Single-stage centrifugal.
- 304 stainless steel impeller, shaft and housing
- Sealing of shaft/motor by mechanical seal.

• Motor

- Dry, ventilated 2-pole motor.
- Single-phase: thermal protection with automatic reset.
- Capacitor integrated into the terminal box.

Speed:	2900 rpm
1~ winding:	230 V
3~ winding:	230 - 400 V.
Frequency :	50 Hz
Insulation class:	130 (B)
Protection class:	IP 44
EC conformity:	NF EN 60335-2-41
Cable:	H07Rn-F (1,5m)

SECTIONAL DRAWING

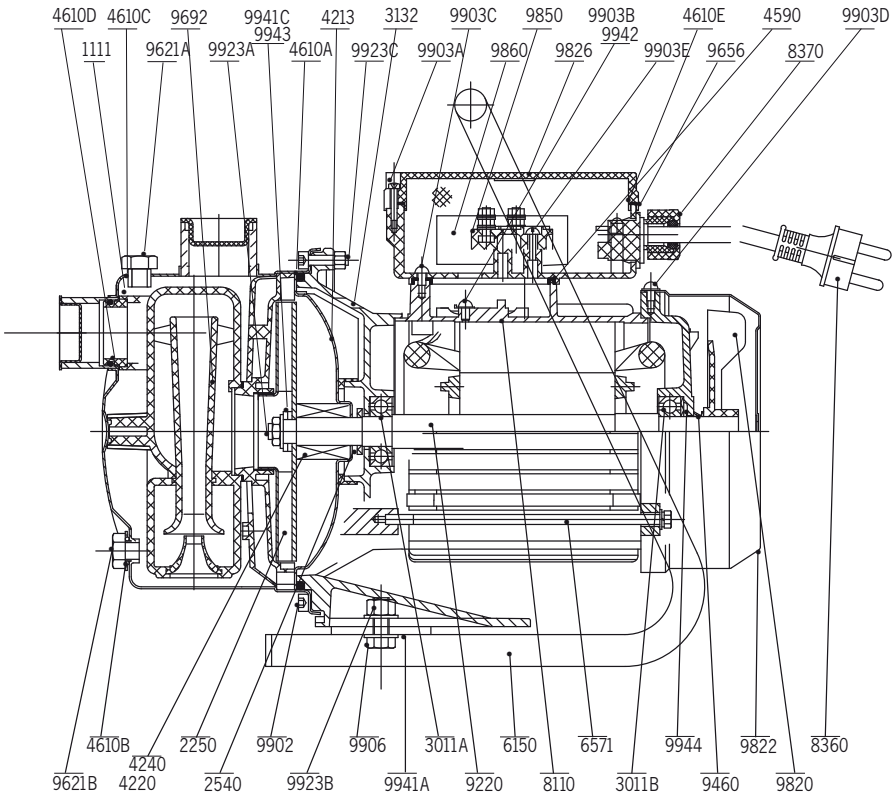

BASIC CONSTRUCTION

Main parts	Material
Housing	AISI 304 stainless steel
Impeller	AISI 304 stainless steel
Injectors	Noryl GFN 20
Diffusers	Noryl GFN 20
Shaft	AISI 304 stainless steel
Mechanical seal	Graphite/Ceramic
Gasket	NBR

PARTS LIST

•1111 - Pump housing
•2250 - Impeller
2540 - Deflector
3011A - Front ball bearing
•3011B - Rear ball bearing
3132 - Sleeve bearing lantern ring
4213 - Throat bushing support
•4220 - Rotating ring | Seal
•4240 - Fixed ring | Mechanical
4590 - Flat gasket - terminal box
•4610A - O-ring bottom of housing
•4610B - O-ring under 9621b
•4610c - O-ring under 9621a
•4610d - O-ring bottom of housing
4610E - O-ring terminal box lid
6150 - Handle
6571 - Tie rod
8110 - Motor housing with stator
8370 - Cable gland
9220 - Rotor shaft
9460 - Lip seal
9621A - Filler plug
9621B - Drain plug
•9692 - Injector
•9820 - Fan
•9822 - Fan housing
9826 - Terminal box
9850 - Terminal board
9860 - Capacitor
9902 - Lantern ring-housing fixing screw
9903A - Terminal box lid fixing screw
9903B - Ground screw
9903c - Terminal box fixing screw
9903D - Fan housing fixing screw
9903E - Terminal board fixing screw
9906 - Handle fixing screw
9923A - Impeller nut
9923B - Handle fixing nut
9923C - Lantern ring-housing fixing nut
9941A - Flat washer for handle attachment
9941C - Flat washer for impeller attachment
9942 - Tooth lock washer under 9903b
9903D - Fan housing fixing screw
9943 - Split spring washer
9944 - Spring washer

(•) Recommended spare parts

HYDRAULIC PERFORMANCE

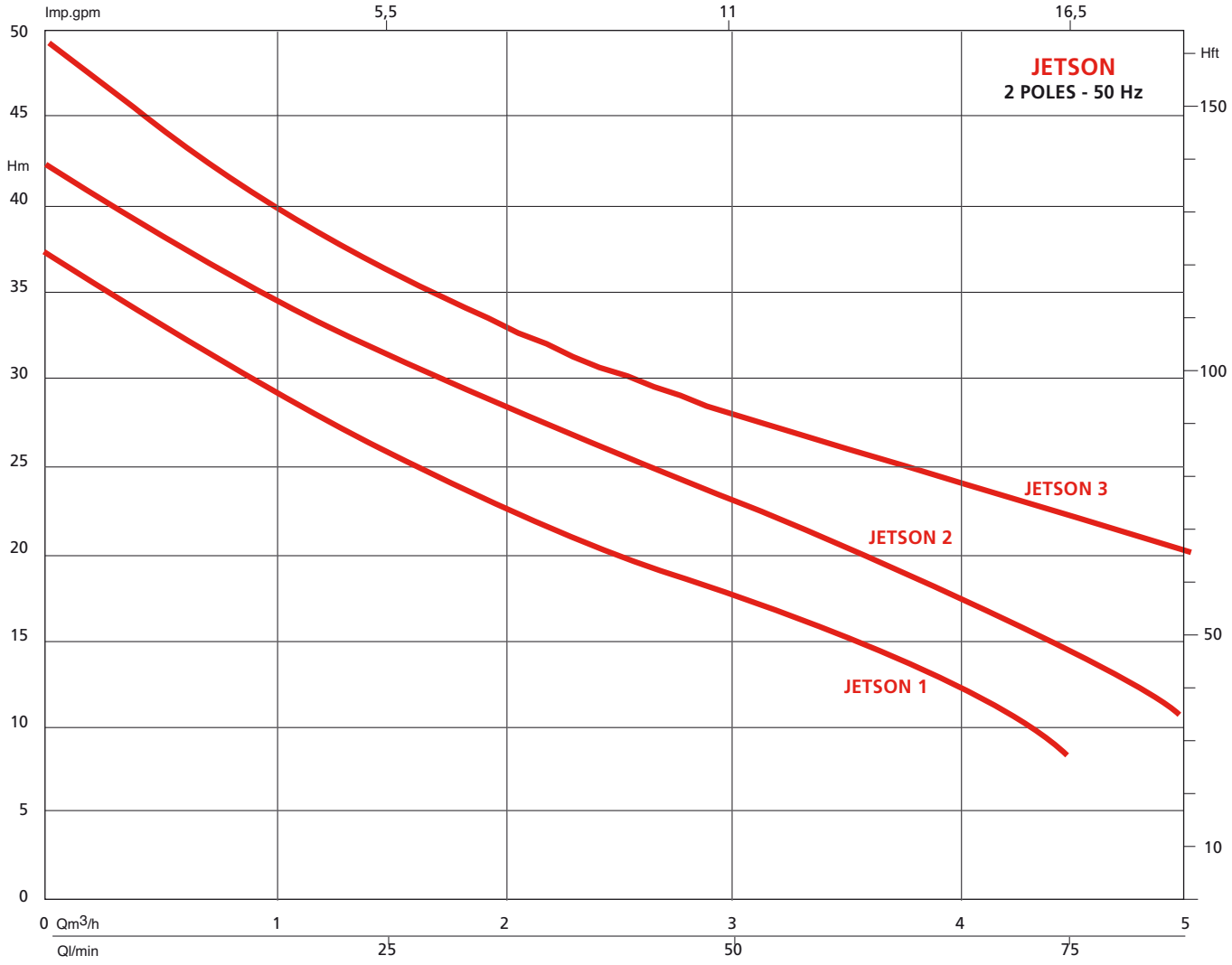

EXPLODED VIEW

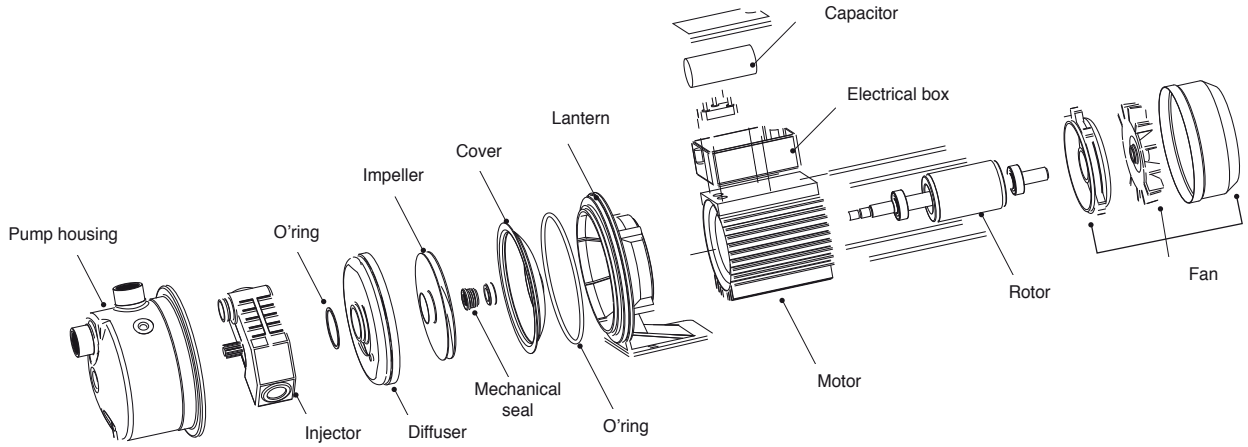

JETSON

INSTALLATION DIAGRAMS - JETSON STANDARD

• JETSON on intake

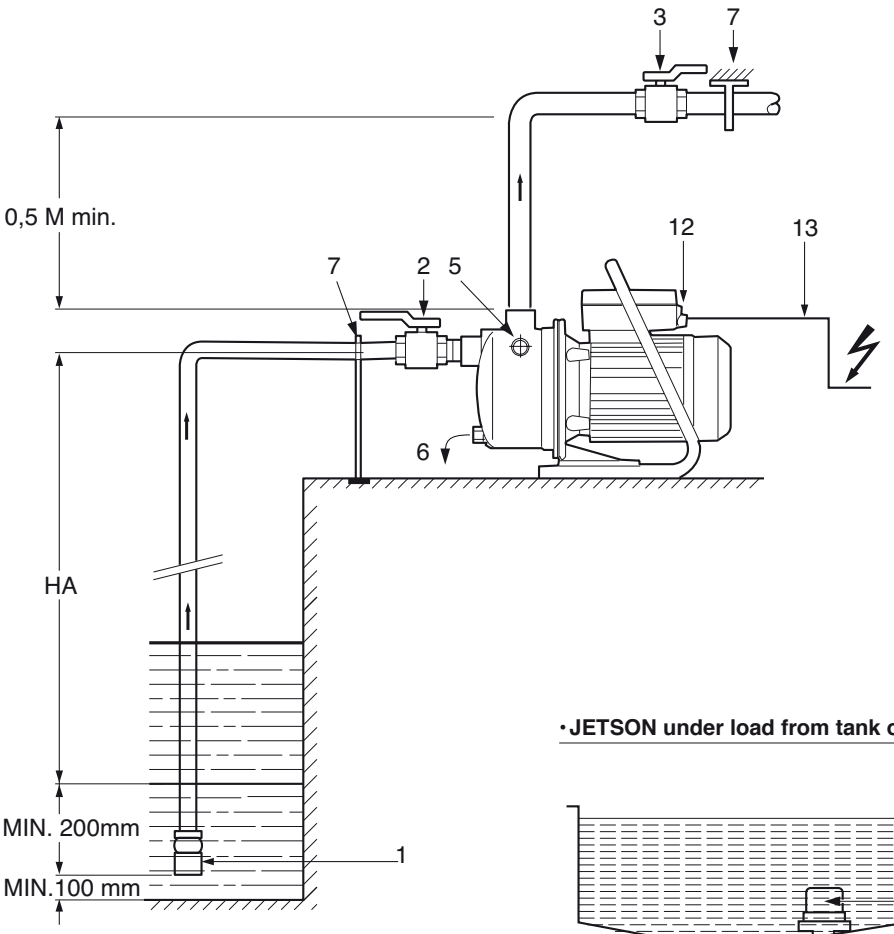

• JETSON under load from tank or mains water supply

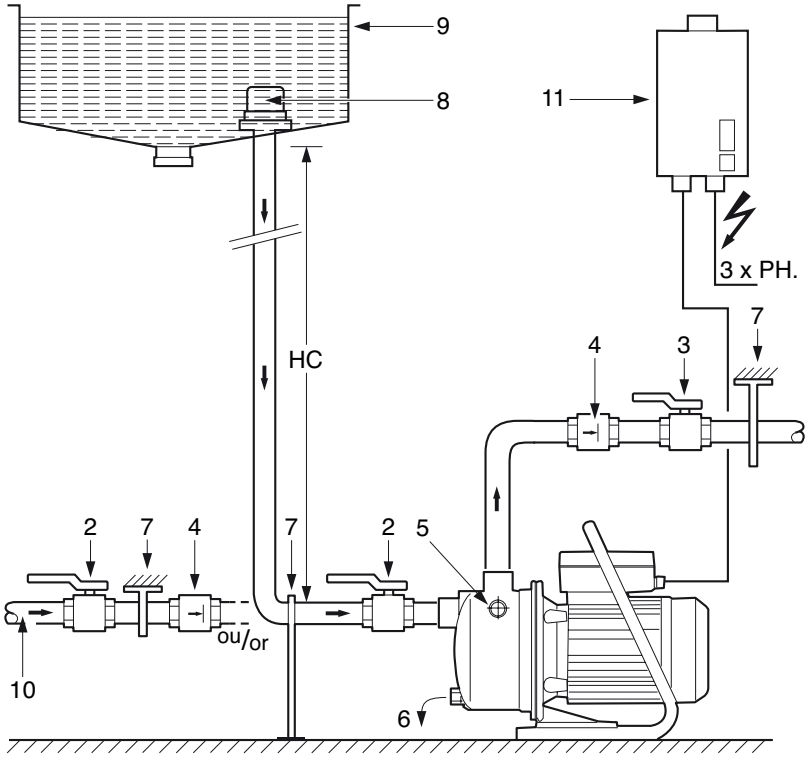

1: Strainer foot valve (max. flow section: 1 mm)
2: Pump intake valve
3: Pump discharge valve
4: Non-return valve
5: Filler plug
6: Drain plug
7: Pipe hanger
8: Strainer
9: Storage tank
10: Mains water supply
11: Three-phase motor protective slave switch
12: On/off switch in single phase
(red indicator light)
13: Cable with plug in single phase
HA: Suction head
HC: Flooded head

ELECTRICAL AND DIMENSIONAL SPECIFICATIONS

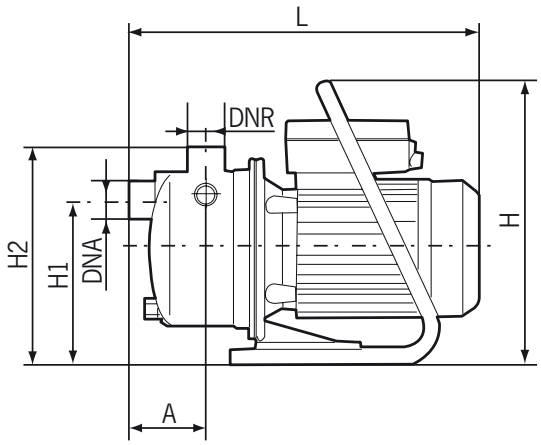

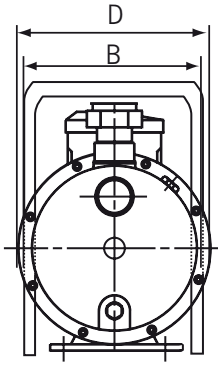

Type	A	B	H1	H2	H	D	L	DNA	DNR
JETSON-1-M-P	80	180	167,50	223	290	184	354	G1	G1
JETSON-2-M-P	80	180	167,50	223	290	184	354	G1	G1
JETSON-3-M-P	96,5	182	178,50	230,5	290	198	417	G1	G1

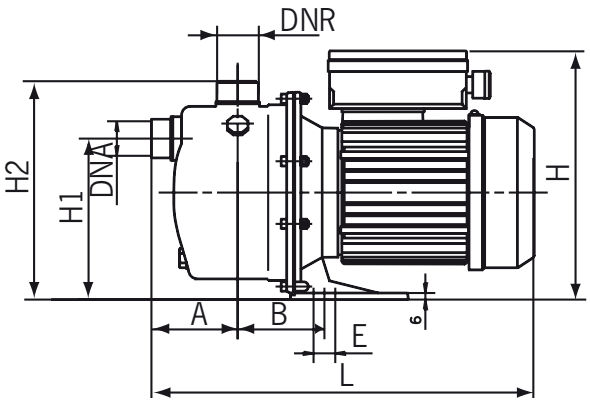

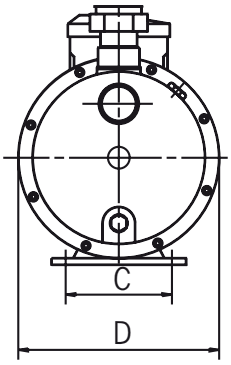

Type	A	B	C	D	E	F	H	H1	H2	L	DNA	DNR
JETSON-1-M	80	83	98	184	20	10	226	147.50	200	354	G1	G1
JETSON-2-M/T	80	83	98	184	20	10	226 / 203	147.50	200	354	G1	G1
JETSON-3-M/T	96.5	122	98	198	20	10	232 / 215	160	212	417 / 446	G1	G1

	MOTOR								PUMP
Type	P1	Motor efficiency %			P2	Capacity (A)		Capacitor	Weight
	kW	4/4	3/4	2/4	kW	1~	3~ 230V	3~400 V	μ x 450 V	kg
JETSON-1-M	0.9	-	-	-	0.65	4	-	-	20	8.9
JETSON-2-M	1.2	-	-	-	0.75	5,2	-	-	20	9.9
JETSON-2-T	1.2	79.9	76	71	0.75	-	4.5	2.6	-	9.6
JETSON-1-M-P	0.9	-	-	-	0.65	3.8	-	-	20	9.6
JETSON-2-M-P	1.2	-	-	-	0.75	4.58	-	-	20	10.6
JETSON-3-M	1.3	-	-	-	1.1	6.2	-	-	30	11.2
JETSON-3-M-P	1.3	-	-	-	1.1	6.2	-	-	30	11.3
JETSON-3-T	1.2	82.2	79.5	74.7	1.1	-	4.5	2.6	-	13.5

JETSON PAC

ACSON SPECIFICITIES

Automation

When a tap is turned on, the system pressure falls and the pumps starts up immediately at the factory-preset threshold of 1.5 bar.
This threshold may be increased on site up to 3 bar according to the mains supply pressure (or HR [discharge head], HC [flooded suction height]).
The pump continues to operate for as long as there is a minimum flow rate in the system.

"Anti-water-hammer" safety device

When the tap is turned off, the pump stops automatically after a 3-5 second time lag. This time lag avoids the need to install a tank.

Low-water safety device

The automated system protects the pump from a lack of water by stopping the motor. This stoppage is shown by the activation of the "ALARM" warning light. The pump must be manually restarted via the «RESET» button.
Even when the automated system is used, all of the pump's characteristics are maintained.
The self-priming function is ensured by pressing and holding the «RESET» button during priming.



• **JETSON PAC** Automation

JETSON PAC INSTALLATION DIAGRAMS

• **JETSON PAC under suction**

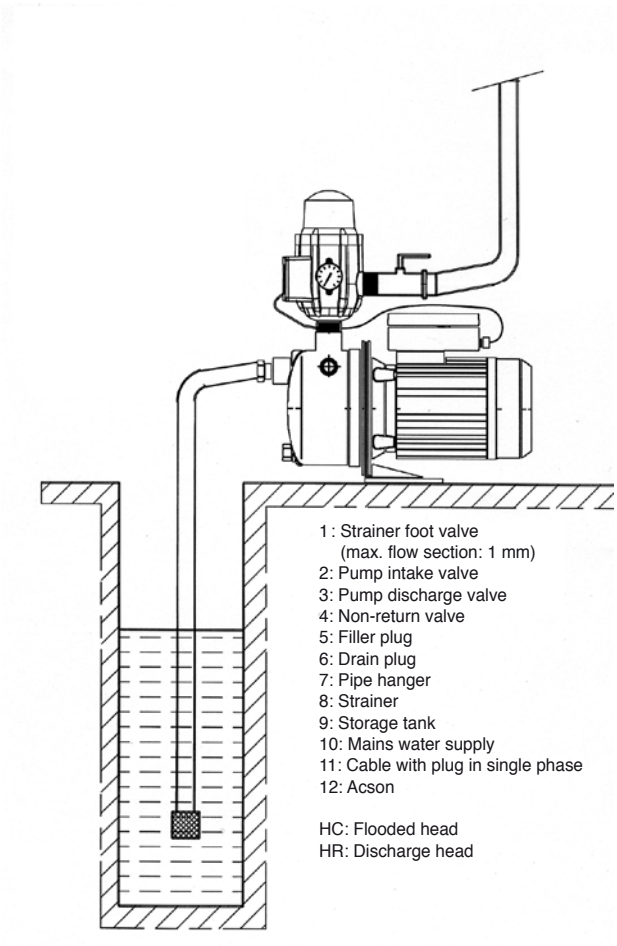

1 : Strainer foot valve
(max. flow section: 1 mm)
2: Pump intake valve
3: Pump discharge valve
4: Non-return valve
5: Filler plug
6: Drain plug
7: Pipe hanger
8: Strainer
9: Storage tank
10: Mains water supply
11: Cable with plug in single phase
12: Acson

HC: Flooded head
HR: Discharge head

• **JETSON PAC gravity-primed**

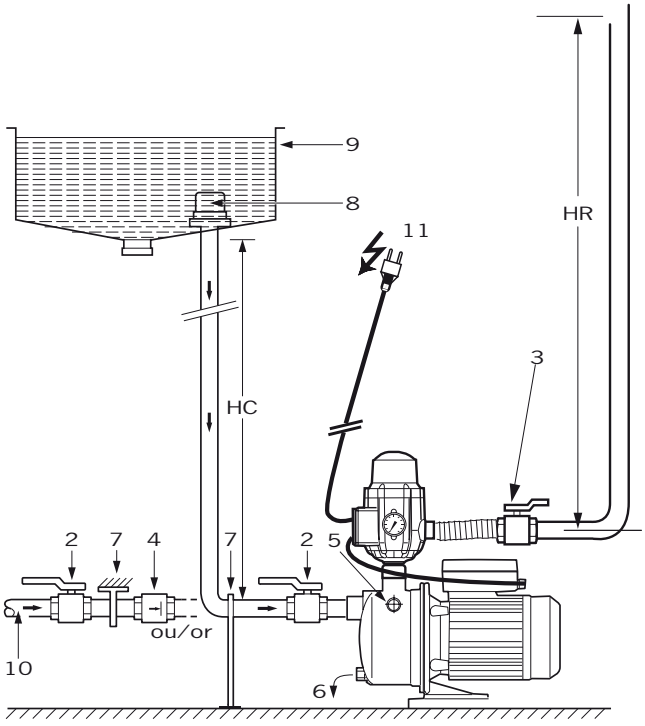

ELECTRICAL AND DIMENSIONAL SPECIFICATIONS

Product	MOTOR				Pump									
	Power		Current	Capacitor	type	H	L	H1	H2	L1	E	DNA	DNR	Mass
	P1	P2	MONO											
	kW	kW	A	μ x 450 V		mm	mm	mm	mm	mm	mm			kg
JETSON-PAC1-M	0,87	0,65	4,1	20	JETSON-1	460	354	148	226	155	20	1"	1"	10
JETSON-PAC2-M	1	0,75	4,58	20	JETSON-2	460	354	148	226	155	20	1"	1"	10
JETSON-PAC3-M	1	1,1	4,58	20	JETSON-2	472	417	160	232	219	20	1"	1"	10

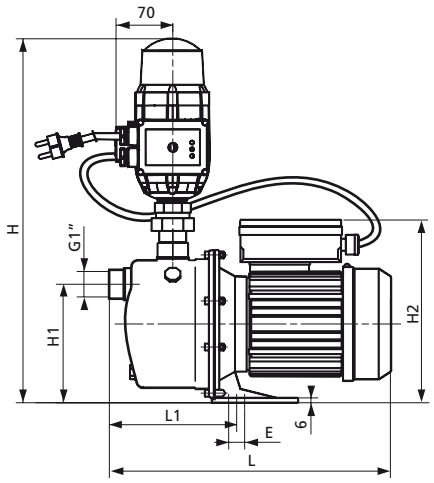

ACCESSORIES

Standard version

- Suction kit.
- Shut-off valve, strainer foot valve.
- Non-return valve.
- Bladder tank.
- Protective slave switch for three-phase motor.



- Non-return valve





- Shut-off valve



- Bladder tank



- Protective slave switch for three-phase motor

- Suction kit



PAC version

- Suction kit.
- Shut-off valves.
- Strainer foot valve.



- Shut-off valve





- Strainer foot valve



- Suction kit

Starkit G1 suction kit

- Suction kit with long hose. 7 m.
- Strainer foot valve.
- 2 intake/delivery connectors.

FEATURES

a) Electrical

- 230 V - 50 Hz (M) single-phase, with integrated thermal protection and automatic resetting.
- Capacitor integrated into the terminal box.
- 230 - 400 V - 50 Hz (T) three-phase, motor protection essential for differential circuit-breaker (standard version).

Provide a switch and low-water protection box in both single-phase and three-phase.

b) Fitting

- Fixed or mobile suction or gravity-primed installation.
- Gravity-primed installation of JETSON PAC is only possiblle if the static pressure in the system is ≤ 1.5 bar.
- Fixed installation via the two slots in the support cross-bar.
- Mobile (single-phase version): ensure the attachment of the intake pipe if the suction head > 4 m.
- Connection via a flexible hose with reinforcing coil, or a rigid pipe.
- Strainer recommended (ø mesh: 1 mm).
- Foot valve recommended for pump in suction mode.

c) Packaging

Delivered ready for use, pre-wired with an electrical plug fitted (for single-phase) and optional handle.
Equipped with an illuminated switch in the standard single-phase version.

d) Maintenance

- Repair: see recommended spare parts (•) subject to wear.

HYDROMINI JETSON

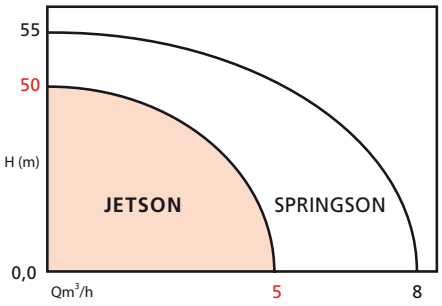

APPLICATIONS

- Recommended for:
- Domestic pressure boosting.
- Drip watering systems.
- Irrigation.

OPERATING RANGES

Max. operating pressure:	**6 bar**
Max. temperature:	**35° C**
Bladder tank:	**10 bar**

BENEFITS

- **Fully assembled and wired booster pump.**
- **Ready for installation, supplied with a plug and a H07RN-F cable (1.5 m).**
- **20 litre or 50 litre bladder tank.**
- **Handy water tank to avoid frequent starting of the pump.**
- **Easy to use and maintain.**

•Hydromini Jetson



DIMENSIONS

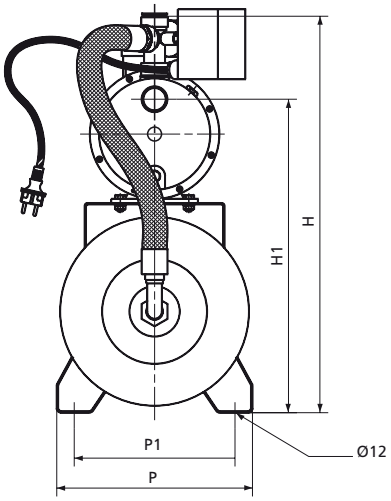

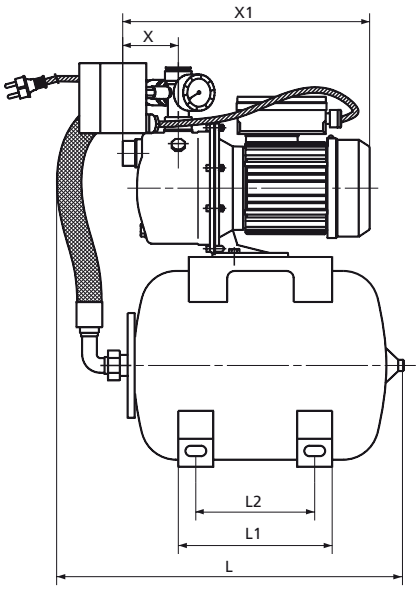

Type	H	H1	L	L1	L2	P	P1	X	X1
	mm	mm	mm	mm	mm	mm	mm	mm	mm
JETSON-1-M-H20	570	450	500	220	170	280	230	80	354
JETSON-1-M-H50	660	530	700	350	300	360	280	80	354
JETSON-2-M-H20	570	450	500	220	170	280	230	80	354
JETSON-2-M-H50	660	530	700	350	300	360	280	80	354
JETSON-3-M-H20	582	462	500	220	170	280	230	96,5	417
JETSON-3-M-H50	672	542	700	350	300	360	280	96,5	417

RECOMMENDED ACCESSORIES HYDROMINI VERSION

- Non-return valve



- Shut-off valve



- Strainer foot valve



- Suction kit



OPERATING RANGES

Flow rates of up to:	**8 m³/h**
Manometric heads of up to:	**55 m**
Max. operating pressure:	**8 bar**
Temperature range:	**+5° at + 35 °C***
Max. ambient temperature:	**+ 40 °C***
DN (nominal diameter) of ports:	**1" (26-34)**
Max. suction head:	**8 m**

*above this, please contact us.

SPRINGSON

MULTISTAGE SELF-PRIMING PUMPS

3 ranges: Standard, Automatique (PAC) and Hydromini 2 poles - 50 Hz

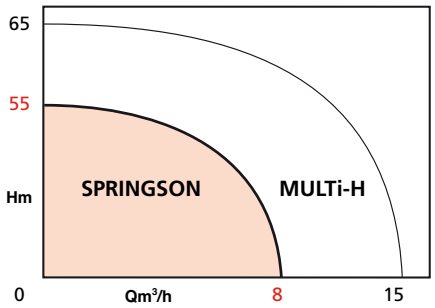

APPLICATIONS

- Pumping and distribution of clean or slightly muddy water in the housing and agriculture sectors
- Rainwater collection
- Abstraction from tanks, shallow wells, rivers or lakes for:
  - Pressurised water supply and distribution
  - Irrigation
  - Watering
  - Cleaning

BENEFITS

- **100% automatic, quick priming, with no risk of unpriming after the pump stops.**
- **Very quiet operation: can be used in inhabited premises.**
- **High hydraulic performance, even at high flow rates and on suction.**
- **High efficiency, economical operation.**
- **Corrosion-resistant components**

Certified ACS

• SPRINGSON
Single-phase version



• SPRINGSON
Three-phase version





• SPRINGSON PAC

• HYDROMINI
SPRINGSON



SPRINGSON

DESIGN

• Hydraulic part

- Horizontal, self-priming.
- Multistage: 4 to 5 stages.
- Axial suction and radial delivery; tapped ports
- Impellers fitted onto the extended motor shaft.
- Sealing of shaft opening by a standardised mechanical seal.
- Hydraulic unit attached to a lantern ring at 8 points.

• Motor

- Standard ventilated - 2 poles.
- Extended shaft end.
- Lubricated rotor shaft guide bearings for extended service life.
- Single-phase: integral thermal protection and capacitor; automatic reset (except for -N version).

Speed:	2900 rpm
Single-phase winding:	230 V
*three-phase:	230-400 V
Frequency:	50 Hz (option 60 Hz)
Insulation class:	155 (F)
Protection class:	IP54

*not available in PAC and Hydromini versions

BASIC CONSTRUCTION

Main parts	Material
Pump housing:	AISI 304 stainless steel
Motor lantern ring bracket:	Aluminium
Impeller:	Noryl cont. 30 % FG*
Suction unit:	Noryl cont. 30 % FG*
Rotor shaft:	AISI 420 stainless steel
Pump shaft:	AISI 431 stainless steel
Mechanical seal:	Impregnated carbon

* FG: fibreglass

IDENTIFICATION

SPRINGSON - PAC 2 04 - M

Pump code

Version with automated system

Nominal flow rate in m^3/h (2 or 4)

Number of stages

M: single-phase motor
T: three-phase motor

SECTIONAL DRAWING

• SPRINGSON 405-T

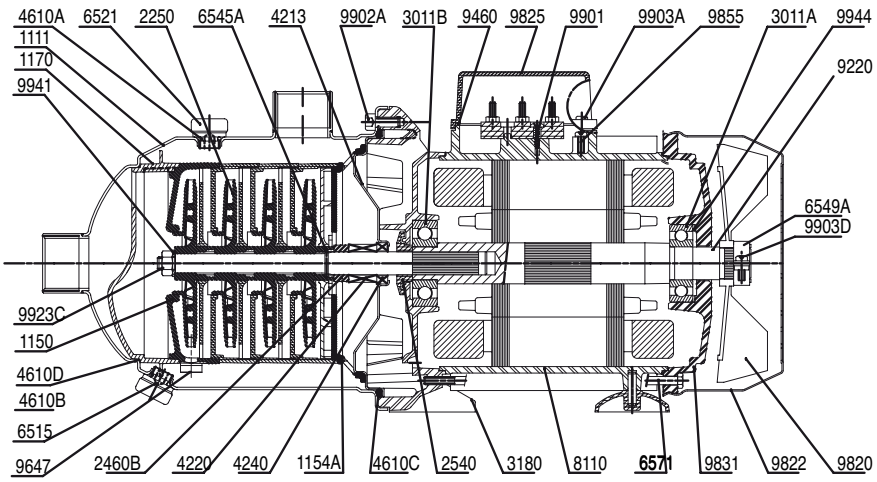

• Mechanical seal

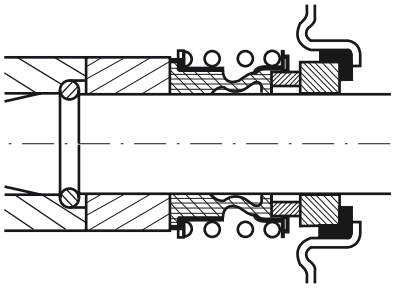

Parts list

1111 - Pump housing
1150 - Stage housing with return channel
1154 A - Centring device with return channel
1170 - Suction unit
• 2250 - Thrower
2460B - Axial bearing of mechanical seal
2540 - Thrower
3011A - Fan-side bearing
3011B - Pump-side bearing
3180 - Pump/motor lantern ring bracket
4213 - Throat bushing support
• 4220 - Rotating ring I Seal
• 4240 - Fixed ring I Mechanical
•4610A/B/C/D - O-rings
6515 - Drain plug
6521 - Filler plug
6545A - 1/2 circlip
6571 - Motor tie rod
8110 - Motor housing assembly
9220 - Rotor-shaft
9460 - Terminal cover gasket
9647 - Valve
9820 - Fan
9822 - Fan cover
9825 - Terminal cover
9830 - Front motor bearing shield
9831 - Rear motor bearing shield
9902A - Housing nut + screw
9923A - Bearing nut + screw
9923C - Shaft end nut
9941 - Flat washer
9944 - Spring washer

(•) Recommended spare parts

HYDRAULIC PERFORMANCE

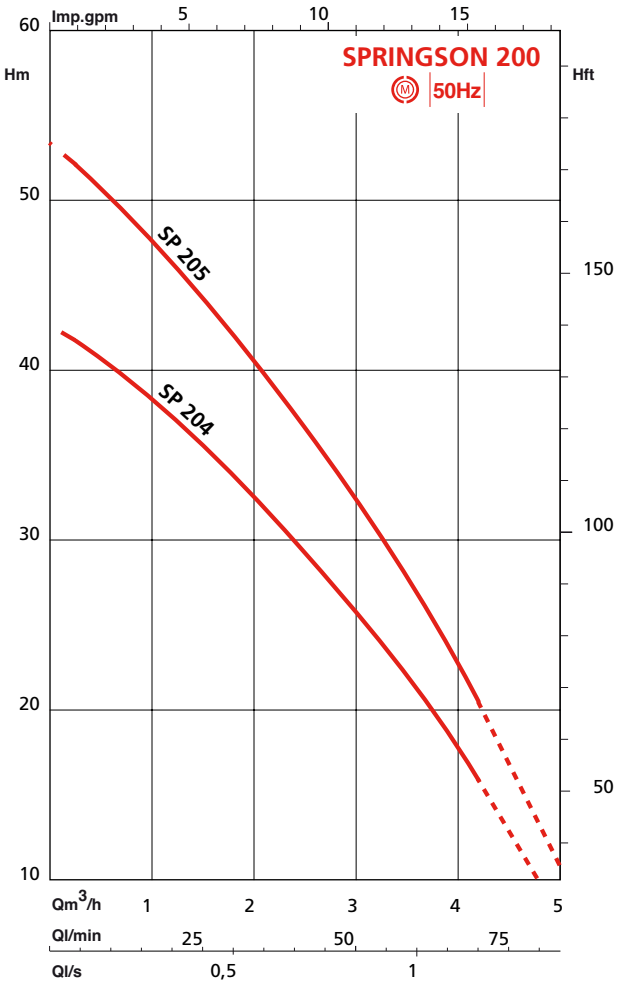

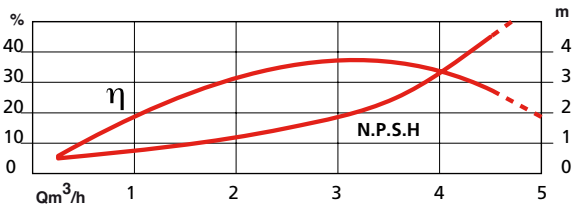

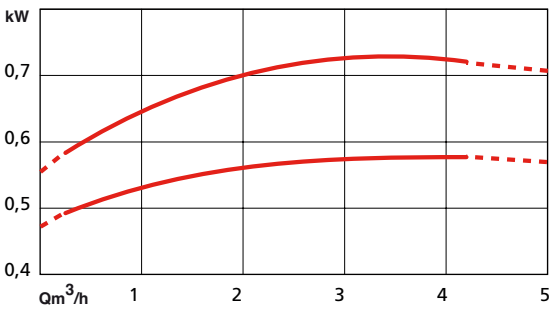

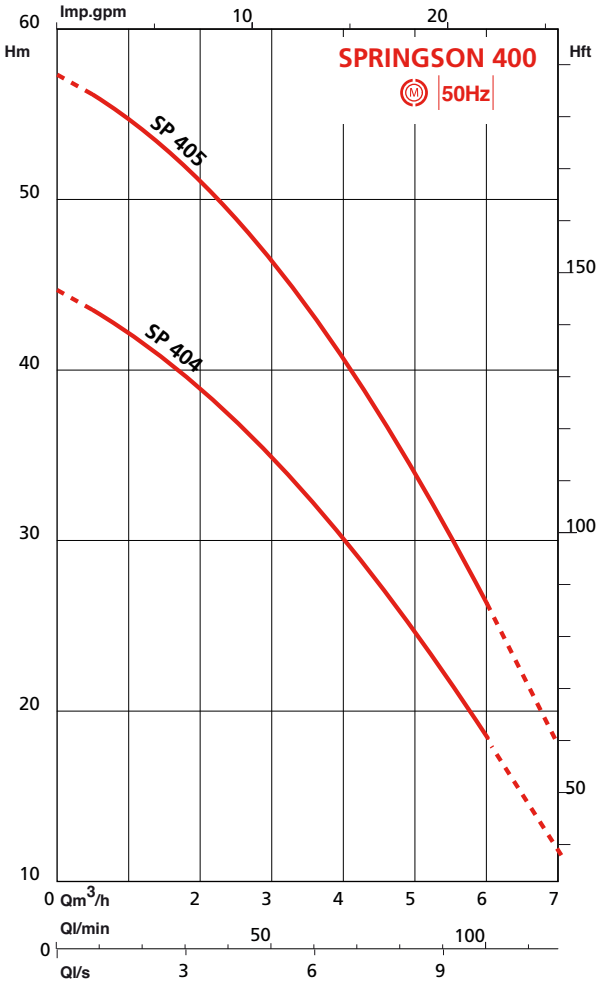

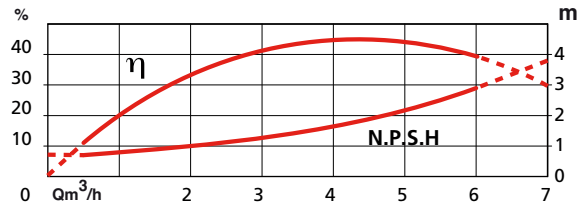

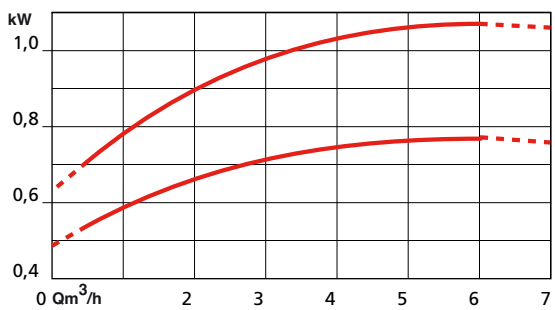

SPRINGSON

SPRINGSON STANDARD INSTALLATION DIAGRAMS

• **SPRINGSON Standard on suction**

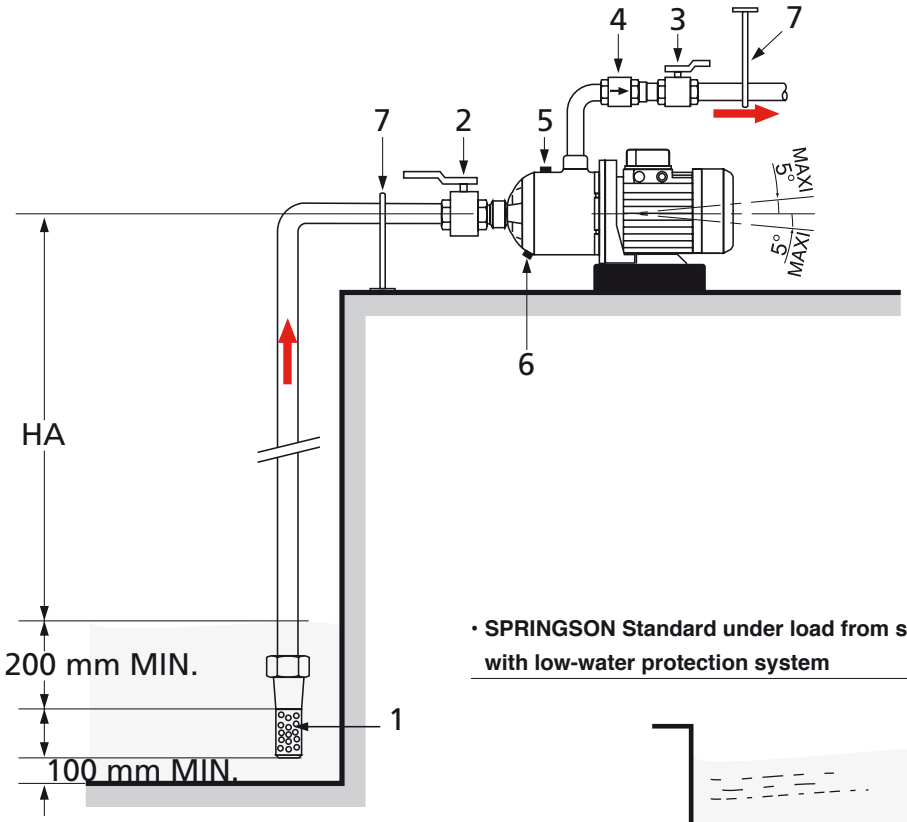

1 - Strainer foot valve (max. flow section: 1 mm)
2 - Pump suction valve
3 - Pump discharge valve
4 - Non-return valve
5 - Filler plug
6 - Drain plug
7 - Pipe hanger
8 - Strainer
9 - Storage tank
10 - Mains water supply
11 - Three-phase motor protective slave switch
12 - Low-water protection system
13 - Cable connecting pump and automated system
14 - Automated system
15 - Power cable with plug
HA : Suction head
HC : Flooded head
HR : Discharge head

• **SPRINGSON Standard under load from storage tank or mains water supply with low-water protection system**

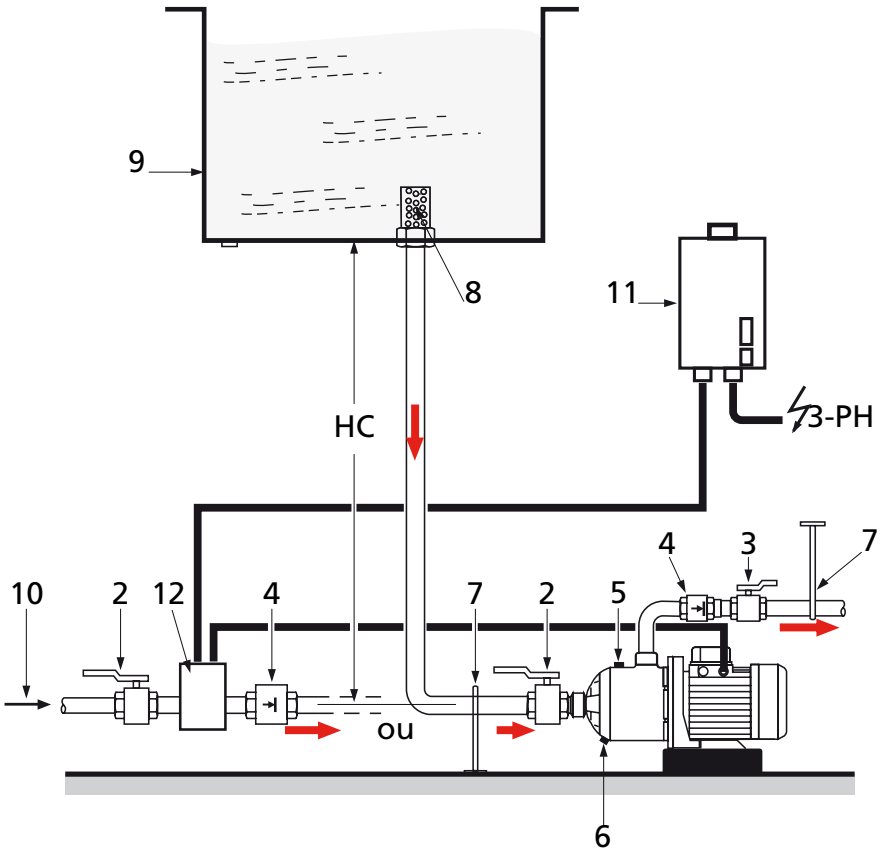

ELECTRICAL AND DIMENSIONAL SPECIFICATIONS

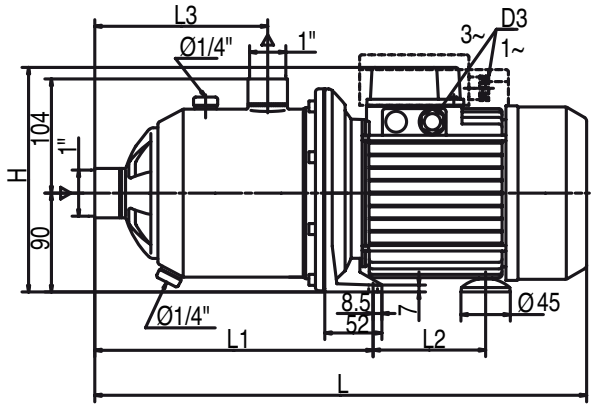

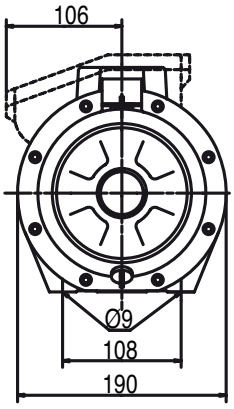

ORDER REFERENCE	MOTOR P2	Motor efficiency % 4/4	3/4	2/4	P1	In (A) 1X 230 V	3X 230 V	3X 400 V	Capacitor	PUMP H	L	L 1	L2	L 3	D3	Weight
	kW				kW				µF	mm	mm	mm	mm	mm		kg
SPRINGSON204-M	0.55	-	-	-	0.84	4.2	-	-	12	188	418	253	94	157.5	PG11	8.4
SPRINGSON204-T	0.55	-	-	-	0.83	-	3.3	1.9	-	190	418	253	94	157.5	PG11	9.3
SPRINGSON205-M	0.75	-	-	-	1.09	5.4	-	-	16	216	447	277	88	181.5	PG13.5	11.7
SPRINGSON205N-T	0.75	77.4	74.4	76	1.11	-	3.3	1.9	-	219	481	277	110	181.5	1xM20	13
SPRINGSON404-M	0.75	-	-	-	1.09	5.1	-	-	16	216	423	253	88	157.5	PG13.5	11.7
SPRINGSON404N-T	1.1	79.6	79.6	78	1.57	-	4.8	2.8	-	219	457	253	110	157.5	1xM20	13.8
SPRINGSON405-M	1.1	-	-	-	1.51	7.6	-	-	30	224	472	277	104	181.5	PG13.5	14.8
SPRINGSON405N-T	1.1	79.6	79.6	78	1.37	-	4.3	2.5	-	219	481	277	110	181.5	1xM20	14.4

FEATURES

a) Electrical

- 230 V single-phase - 50 Hz (M), with integrated thermal protection and automatic reset (except for -N version).
- Capacitor integrated into the terminal box.
- 230-400V three-phase - 50 Hz (T), essential to use a differential circuit-breaker for motor protection (Standard version).

Provide a switch and low-water protection box in both single-phase and three-phase.

b) Fitting

- Fixed or mobile, suction or gravity-primed installation
- The system must incorporate protection for the pump from adverse weather conditions and frost (no direct exposure to rain or sun).
- Gravity-primed installation of the Springson PAC is only possible if static pressure in the system is < 2.5 bar.
- Fixed installation via the two fixing holes in the lantern ring.
- Mobile (single-phase version): secure the suction pipe if the suction head is > 4 m.
- Connection via a flexible hose with reinforcing coil, or a rigid pipe.
- Strainer recommended (Ø mesh: 1 mm).
- Foot valve recommended for pump in suction mode.

c) Packaging

Delivered ready for use, with a pre-wired electrical plug (in single-phase).

d) Maintenance

- Repair: see recommended spare parts (•) subject to wear.

ACCESSORIES

STANDARD VERSION

- Suction kit
- Shut-off valves
- Strainer
- Strainer foot valve
- Non-return valve
- Bladder or galvanised tanks
- Low-water protection system
- Three-phase motor protective slave switch.
- Hydromini (a Hydromini version:

Kit + tank + pump for self-assembly).
Ref. SINGLE-PHASE = 4035209
THREE-PHASE = 4035210.

STARKIT

Suction kit with long hose. 7 m, strainer foot valve and 2 connectors
suction - discharge

.

REF. ORDER	REF. ARTICLE
STARKIT G1 (for SPRINGSON 204, 205)	4027874
STARKIT G1$^{1/4}$ (for SPRINGSON 404, 405)	4036081



SPRINGSON PAC

SPECIFICITY OF SPRINGSON PAC (AUTOMATION AND CONTROL)

• Operating principle

Automation
When a tap is turned on, the system pressure falls and the pump starts up immediately at the factory-preset threshold of 1.5 bar. This threshold may be increased on site according to the mains supply pressure (or HR [discharge head], HC [flooded head]).
The pump continues to operate for as long as there is a minimum flow rate in the system.

"Anti-water-hammer" safety device
When the tap is turned off, the pump stops automatically after a 3-5 second time lag. This time lag avoids the need to install a tank.

Low-water safety device
The automated system protects the pump from a lack of water by stopping the motor. This stoppage is signalled by the activation of the "ALARM" warning light. The pump must be manually restarted via the «Reset» button.
Even when the automated system is in use, all of the pump's characteristics are maintained. The self-priming function is ensured by pressing and holding the «Reset» button during priming.



SPRINGSON PAC INSTALLATION DIAGRAMS

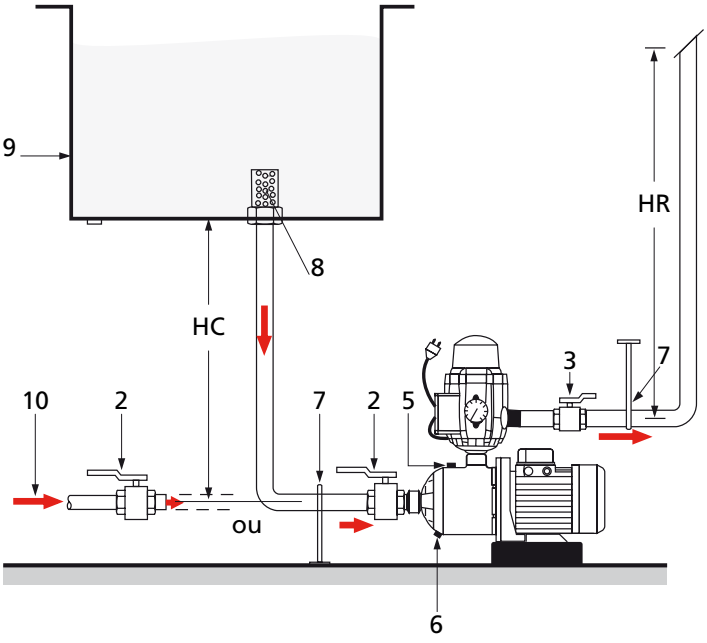

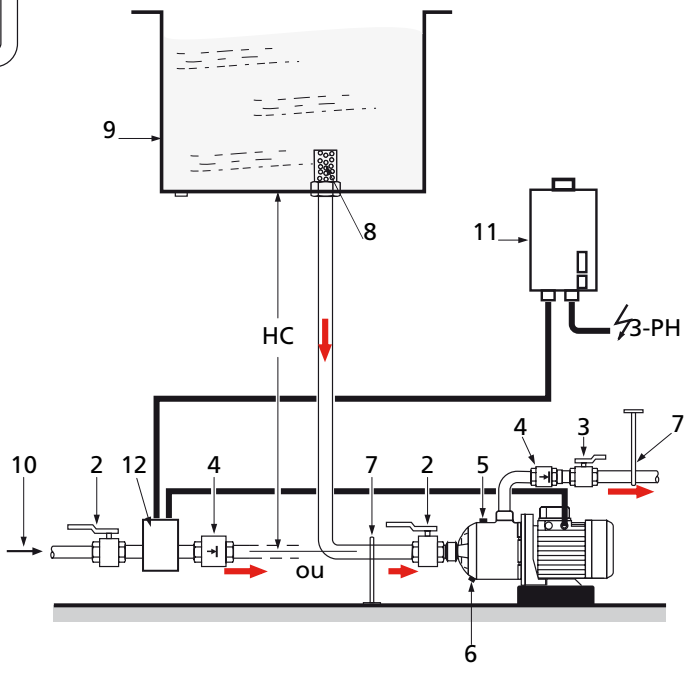

KEYS

1 - Strainer foot valve (max. flow section: 1 mm)
2 - Pump suction valve
3 - Pump discharge valve
4 - Non-return valve
5 - Filler plug
6 - Drain plug
7 - Pipe hanger
8 - Strainer
9 - Storage tank
10 - Mains water supply
11 - Three-phase motor protective slave switch
12 - Low-water protection system
13 - Cable connecting pump and automated system
14 - Automated system
15 - Power cable with plug
HA: Suction head
HC: Flooded head
HR: Discharge head

ELECTRICAL AND DIMENSIONAL SPECIFICATIONS

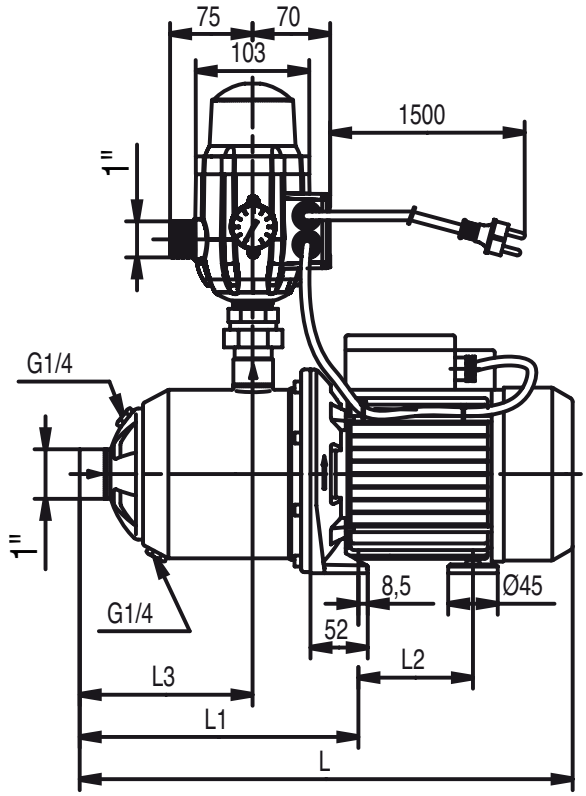

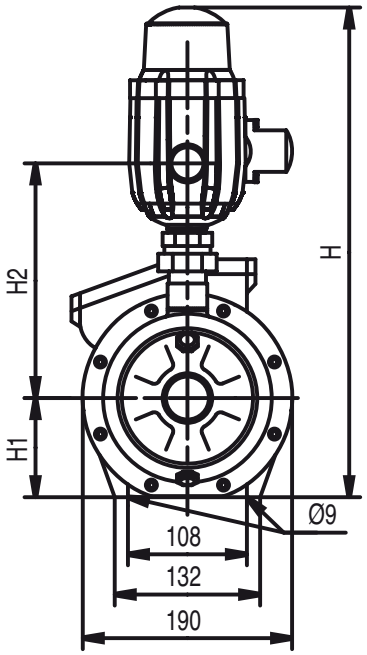

PRODUCT	PUMP	H	L	H1	H2	L1	L2	WEIGHT
		mm	mm	mm	mm	mm	mm	kg
SPRINGSON-PAC204-M	SPR. 204	240	418	90	205	253	94	9.8
SPRINGSON-PAC205-M	SPR. 205	240	447	90	205	277	88	13.1
SPRINGSON-PAC404-M	SPR. 404	240	423	90	205	253	88	13.1
SPRINGSON-PAC405-M	SPR. 405	240	472	90	205	277	104	16.2

SPRINGSON PAC Cable H07RNF with plug.

ACCESSORIES

PAC VERSION
- Suction kit
- Shut-off valves.

STARKIT

Suction kit with 7 m long hose, strainer foot valve and 2 connectors: suction and discharge.

REF. ORDER	REF. ARTICLE
STARKIT G1 (for SPRINGSON 204, 205)	4027874
STARKIT G1$^{1/4}$ (for SPRINGSON 404, 405)	4056081



HYDROMINI SPRINGSON

OPERATING RANGES

Max. operating pressure:	**10 bar**
Max. water temperature:	**+ 35 °C***
Average flow rate from tanks:	**2000 to 5000l/h**

*contact us for information about higher temperatures

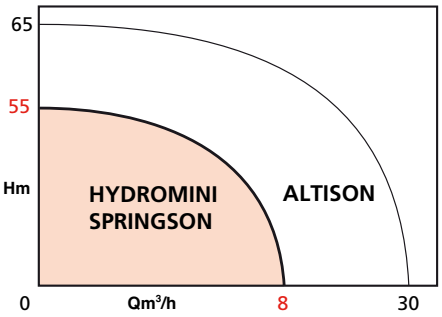

APPLICATIONS

- Maintaining the pressurisation of a water distribution system with insufficient pressure.

Especially recommended for:
- Drip watering.
- Small farms.

Certified ACS



BENEFITS

- **Fully assembled and pre-wired booster pump ready for installation.**
- **Available in 3 tank sizes for perfect compatibility with the application requirements and available space.**
- **Interchangeable bladder tank (food-grade).**
- **Handy water tank to avoid frequent starting of the pump.**
- **Easy to install.**
- **Easy and economical to operate and maintain.**

ACCESSORIES & OPTIONS

- Suction kit.
- G1 T valves for suction and delivery
- Non-return valve
- Strainer foot valve.
- Pipe hanger.

DESIGN

Automatic pressure booster featuring:
- A SPRINGSON 204, 205 or 405 pump
With a 230 V - 50 Hz single-phase motor, including integrated thermal protection and automatic reset.
- Horizontal tank with capacity of 20, 50 or 100 l according to the models, with interchangeable, food-grade bladders.
- Pressure switch with a pressure control gauge for automatic starting and stopping of the pump (factory preset).
- Mains connection via a 1.5 m long electric cable with plug (2 pins + earth).

DIMENSIONAL SPECIFICATIONS

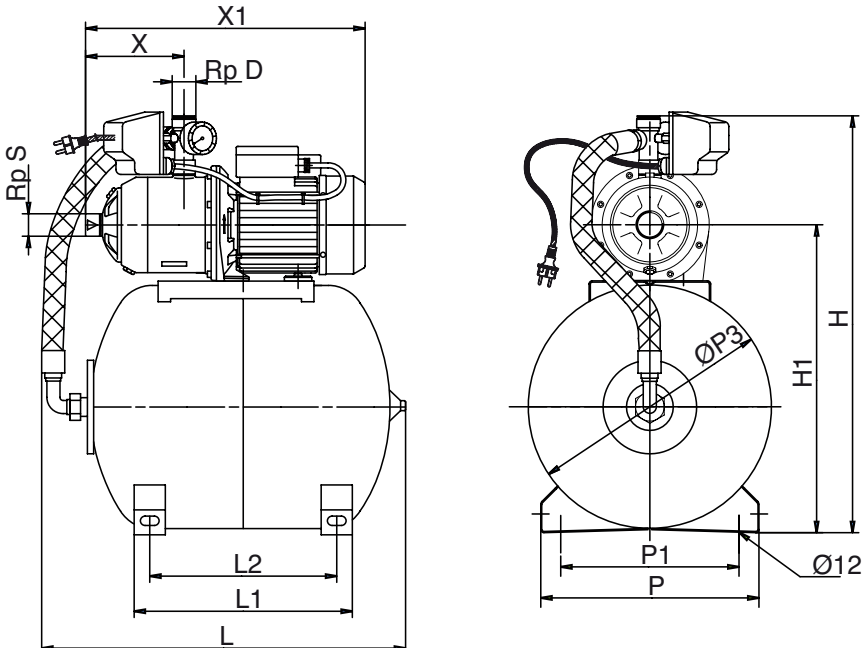

ORDER REFERENCE HYDROMINI SPRINGSON...	Tank capacity	Effective water capacity	Pressures On	Pressures Off	P	P1	H	H1	L	L1	L2	X	X1	ØP3	RpD tapped	RpS	Mass
	litres	litres	bar	bar	mm	mm	mm	mm	mm	mm	mm	mm	mm	mm			kg
204-M-H20	20	10	1.8	3	280	230	570	385	500	220	170	158	418	260	G1	G1	17
204-M-H50	50	18	1.8	3	360	280	655	470	700	350	300	158	418	360	G1	G1	22.2
204-M-H100	100	37.5	1.8	3	320	260	760	585	820	370	310	158	418	460	G1	G1	30.8
205-M-H50	50	18	1.8	3	360	280	655	470	700	350	300	182	447	360	G1	G1	24.7
205-M-H100	100	37.5	1.8	3	320	260	760	585	820	370	310	158	418	460	G1	G1	33.3
405-M-H100	100	37.5	1.8	3	320	260	760	585	844	370	320	182	447	460	G1	G1	35.2

RECUPEO HOME

Rainwater manager
50 Hz

OPERATING RANGE

Flow rate:	**4,8 m³/h**
Total manometric head :	**42 m**
Operating pressure:	**max. 8 bar**
Suction head:	**8 m**
Fluid temperature :	**+5 to +35°C**
IP	**42**
Discharge	**G1**
Suction	**DN 25 - G1**
Standards	**EN 1717**

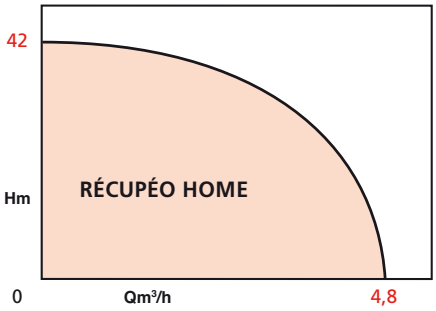

APPLICATIONS

Distribution of rainwater in a residential environment.

- Watering
- External washing, etc...

- Washing machine
- Toilets

ADVANTAGES

- **Compact system, single unit ready to install**
- **Automatically switches to mains water when rainwater tank is empty**
- **Integrated water level device**
- **Supplied with cover (depending on version)**
- **Silent operation**
- **All components in contact with fluid are made from corrosion-resistant materials.**
- **Compliant with standard EN 1717. Disconnected from drinking water network (overflow AB - EN13077)**



• Récupéo with open cover



• Close up of connector

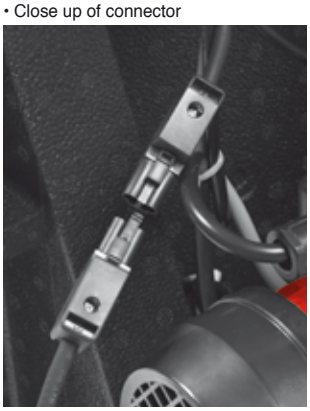

RECUPEO HOME

DESIGN

- Springson 204 multistage pump
- 11L buffer tank equipped with ball cock.
- Switch box controlling a 3-way valve connected to a float to switch between mains water and rainwater
- 1.8 m of cable with 2 pin socket + earth.
- Automatic operation and water level protection provided by the PAC 01.

OPERATION

- The Récupéo is designed to satisfy the rainwater requirements of a single-family house.
- Récupéo distributes rainwater from a tank and, in the event of a rainwater shortage, automatically switches to mains water (using a storage tank) from the drinking water distribution network.

By using rainwater, this unit contributes to environmental protection.

IDENTIFICATION

RÉCUPÉO HOME 204 M

-

Rainwater manager

home : with cover
- : without cover

Pump type

Single-phase 1~230V

INSTALLATION DIAGRAM

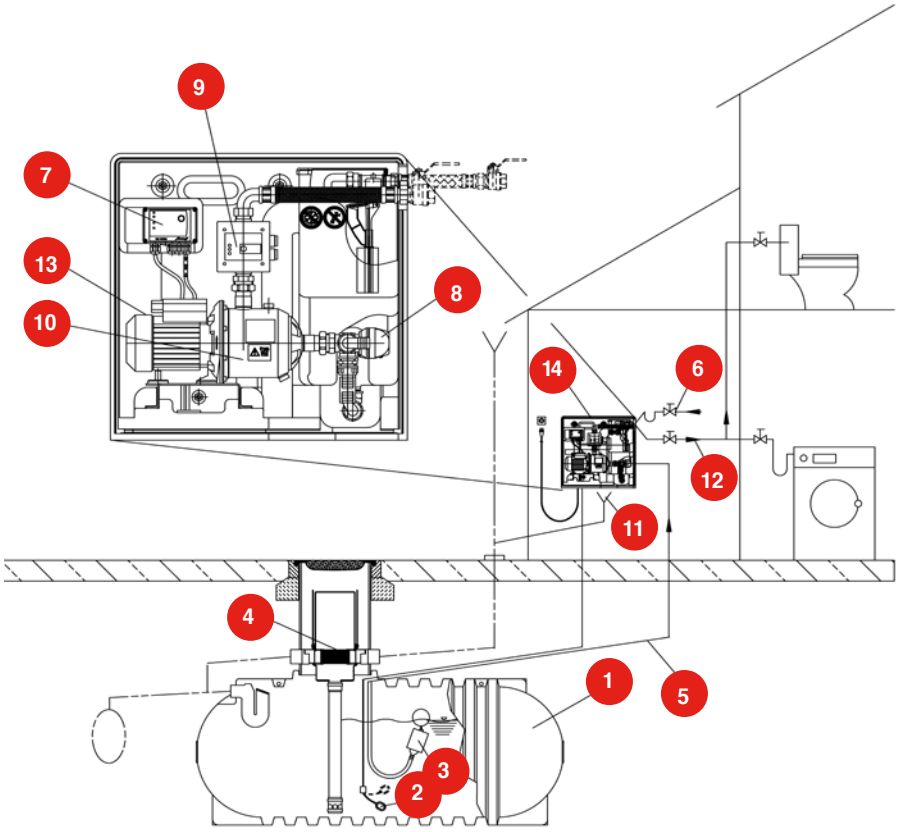

1 tank
2 Float switch
3 Floating suction
4 Filter
5 Suction line
6 Mains water line
7 RCB switch box
8 3-way valve
9 PAC
10 Pump
11 Overflow connection (DN75)
12 System supply line
13 Additional earthing
14 Récupéo

DIMENSIONS

1 - SPRINGSON pump
2 - PAC-01
3 - Overflow
4 - Network connection (cable length 1.80 m)
5 - Float (cable length approx. 20 m - separate packaging - assembled by the customer / installer)
6 - Additional earthing
7 - DN25 - G1" suction connection for tank
8 - G1 discharge
9 - G3/4 mains water connection
10 - Overflow funnel (not included)
11 - 3-way valve for automatic switching between mains water and rainwater
12 - Switch box.

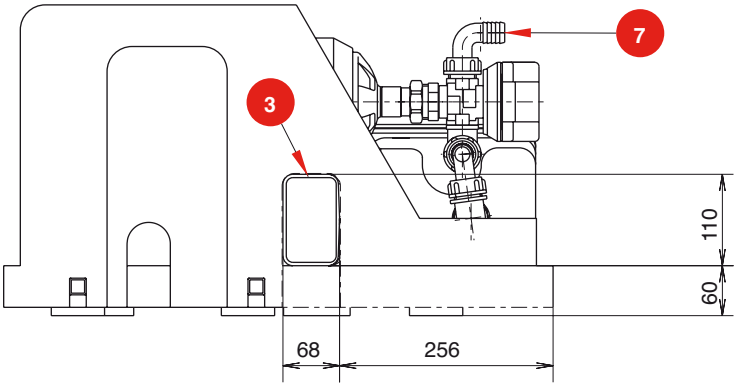

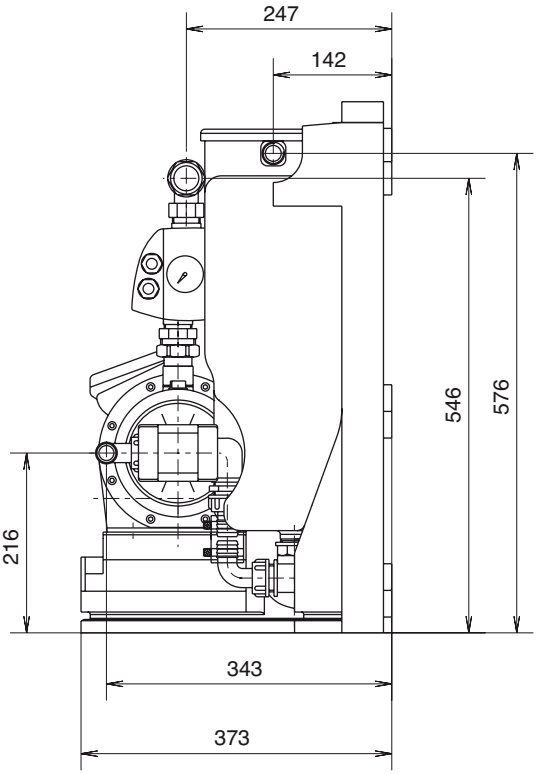

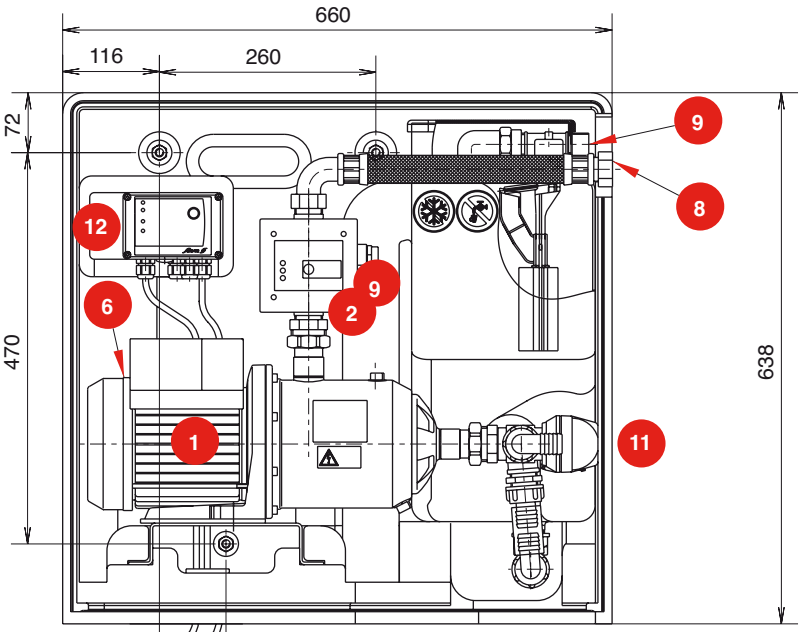

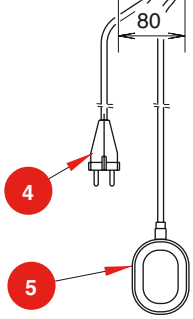

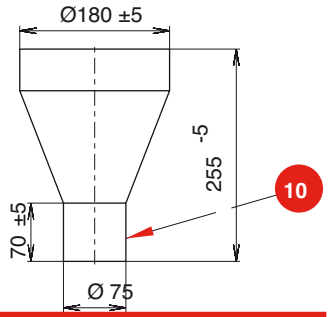

ELECTRICAL FEATURES

Reference	P2	I (A)	Capacitor	Weight
RÉCUPÉO 204M	0,55	4	12	25
RÉCUPÉO HOME 204M	0,55	4	12	26

RECUPEO HOME

HYDRAULIC PERFORMANCES

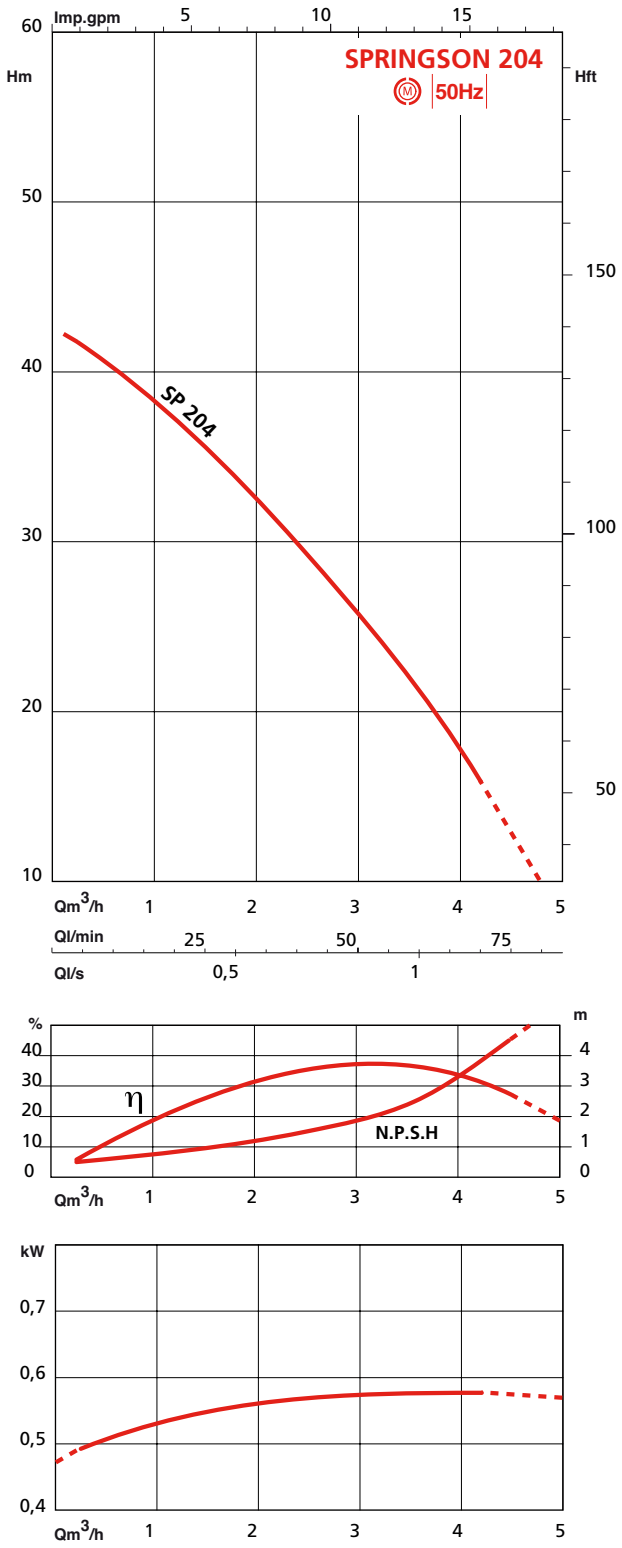

FEATURES

a) Electrical

- Single phase 230V - 50 Hz (M) with integrated thermal protection, automatic resetting.
- Integrated capacitor in the terminal box.

Switch box and water level protection to be provided.

b) Assembly

- Wall installation: attachment materials and assembly template provided.

c) Packaging

- Delivered ready for use.

d) Maintenance

The RÉCUPÉO does not require any particular maintenance (see operating instructions provided with RÉCUPÉO)

PAC-01



- The pump is automatically activated at 1.5 bars as soon as the pressure in the system drops.
- The device is fitted with a water level protection system.
- The integrated tank is extremely useful in the event of minor leakage in the system.
- This prevents the pump from restarting each time the pressure in the system drops.

ACCESSORIES

- Cover
- Overflow funnel
- Overflow alarm
- Storage tanks
- Float suction filter
- Suction pipe

STANDARD EN 1717

Protection against the pollution of drinking water in internal networks and general requirements for systems protecting against return pollution.

Disconnected from drinking water network (overflow AB - EN13077)

RECUPEO MASTER

Rainwater manager for collective applications 50 Hz

OPERATING RANGE

Max. flow rate:	**16 m³/h**
Max. manometric head:	**58 m**
Operating pressure Master L:	**max. 8 bar**
Operating pressure Master XL:	**max. 10 bar**
Max. suction head:	**8 m***
Max. water temperature:	**+35°C**
Max. ambient temperature:	**+40°C**
DN threaded collectors	**1"1/2**

*Master L model only

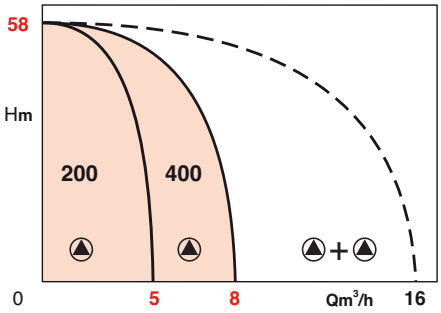

ADVANTAGES

- **Compact, all in one solution, easy to proportion**
- **Preconfigured product, ready to install and compliant with statutory requirements**
- **Solution combining all the specific functions of rainwater recuperation:**
  - **Automatic management of the supplying of rainwater**
  - **Automatic switching between rainwater and mains water**
  - **Disconnection with air gap (compliant with standard EN 1717).**
- **Complete overpressure functions:**
  - **Cascading and alternating pump management with pressure sensor**
  - **Integrated water level protection and motors**
- **Fault signal available**

APPLICATIONS

Rainwater supply for collective buildings (collective residential buildings, tertiary buildings, office blocks) and the industrial sector.
- Irrigation
- Washing vehicle fleets
- Supplying toilets
- Supplying washing machines (on an experimental basis)
- Providing water for the peri-process and the industrial process

• Récupéo master L



• 150L buffer tank and mains water float tap



• Récupéo master XL



RECUPEO MASTER

DESIGN

RECUPEO MASTER L

All the electrical and hydraulic components and connected and assembled on a compact painted steel frame which is treated against corrosion.

- Atomated RCP «Rain Control Pro» system fitted with all the necessary electronics: contactors, 4 - 20 mA pressure sensor, water level protection, level probe with 20 metre cable to display water level in the tank.
- 2 self-priming SPRINGSON surface pumps, insensitive to corrosion, which operate silently.
- Stainless steel 304 collector with 8 litre bladder tank and easy maintenance connection and 0 - 10 bar pressure gauge.
- Buffer tank for mains water with a capacity of 150 litres, impervious to UV with cover and fitted with an adjustable float tap.
- Electricity supply: 1~230V – 50Hz

BASIC CONSTRUCTION

Main parts	Material
Collectors	Stainless steel AISI 304
Buffer tank	MD polyethylene
Pump body	Stainless steel AISI 304
Motor support lantern	Aluminium
Impellers	Noryl*
Suction cells	Noryl
Rotor shaft	Inox AISI 420
Mechanical seal	Impregnated carbon

*filled with 30% fibreglass

IDENTIFICATION

RECUPEO MASTER L SP204 M

Rainwater manager

Collective systems

Model

Pump type : SPRINGSON 204 M

RECUPEO MASTER L INSTALLATION DIAGRAM

10 - Water level sensor
12 - Floating suction
17 - Tank
18 - Filter
19 - Suction line
20 - System supply line
21 - Mains water line
22 - Buffer tank

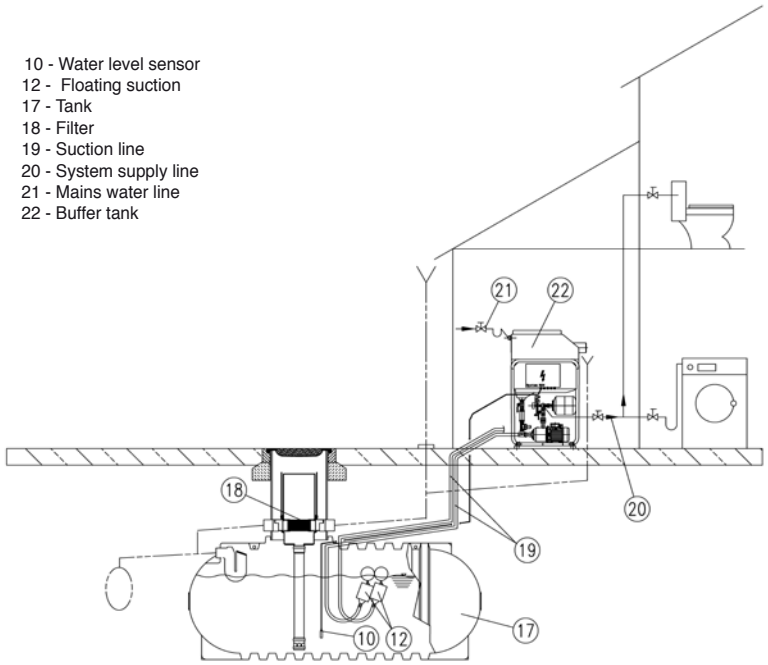

OPERATION

RECUPEO MASTER L

- Rainwater and mains water supply system fitted with two pumps, ready for connection to the network and designed as a compact unit to fulfil the requirements of collective and public buildings.
- Used in the context of the fully automatic supplying of rainwater from an underground tank or rainwater storage tank.
- A separate (floating) suction line is required for each pump.
- The 150 litre buffer tank provides an optimum supply of drinking water to suit the user's requirements when the rainwater tanks are no longer full. This also guarantees perfect disconnection (type AB) from the mains water network according to the EN1717 standard.
- A connection is provided for a non-return alarm.
- Anti-corrosion bladder tank to reduce cycles and optimise regulation.
- Cyclical permutation of pumps and automatic priming during long periods of inactivity.
- Switching to the other pump in case of a fault in one of the pumps and possibility of parallel operation to respond to peak consumption levels.
- Drinking water is supplied in a fully automatic manner by the float tap.
- Automatic renewal function for the water contained in the buffer tank during long periods of inactivity to guarantee optimum hygiene conditions.
- The RECUPEO Master L is equipped with an electronic protection integrated in the motor and protection against excess loads and insufficient water.
- Messages are displayed on the switch box, fault signal available.
- Operation and configuration of the RCP switch box by means of function buttons in a drop-down menu. LCD screen to display tank filling level (as a percentage), pressure and operating status of the system on a permanent basis.
- Switching to the other pump in case of a fault in one of the pumps and possibility of parallel operation to respond to peak consumption levels.

SWITCH BOX AND AUTOMATED SYSTEM

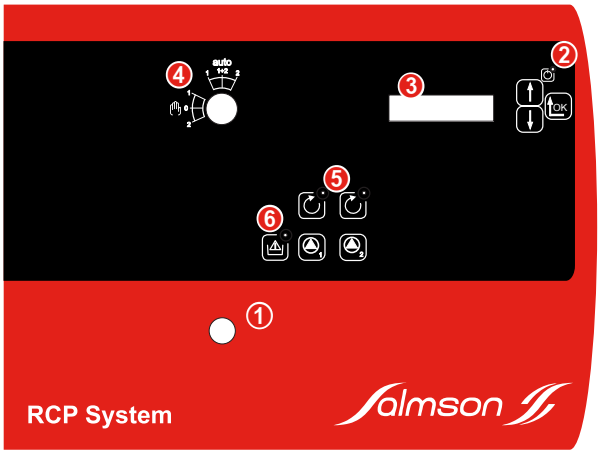

RCP system

1 - Main switch
2 - Green LED for the screen
3 - Display: control, adjustment and status of the system
4 - Operating method: Manual - 0 - Auto
5 - Green LEDs: flashing pumps in operation: pump fault
6 - Red LED: insufficient water

DIMENSIONS RÉCUPÉO MASTER L

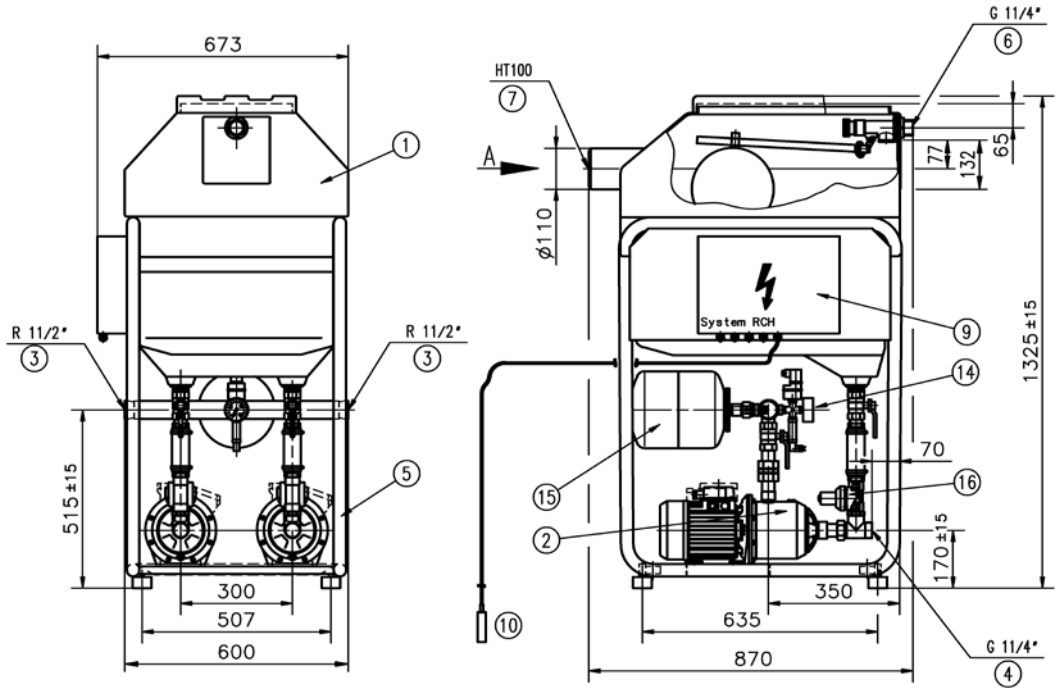

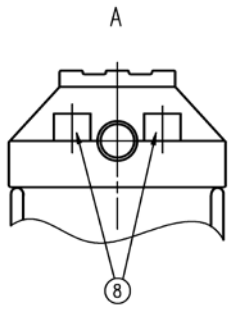

1 Buffer tank (150 litres)
2 Pump
3 Discharge connection
4 Rainwater suction connection
5 Frame
6 Mains water connection
7 Overflow connection (DN100)
8 Rectangular security overflow
9 RCP switch box
10 Water level sensor
14 Pressure sensor and water level protection
15 Bladder tank
16 Contactors

RECUPEO MASTER

HYDRAULIC PERFORMANCES RECUPEO MASTER L

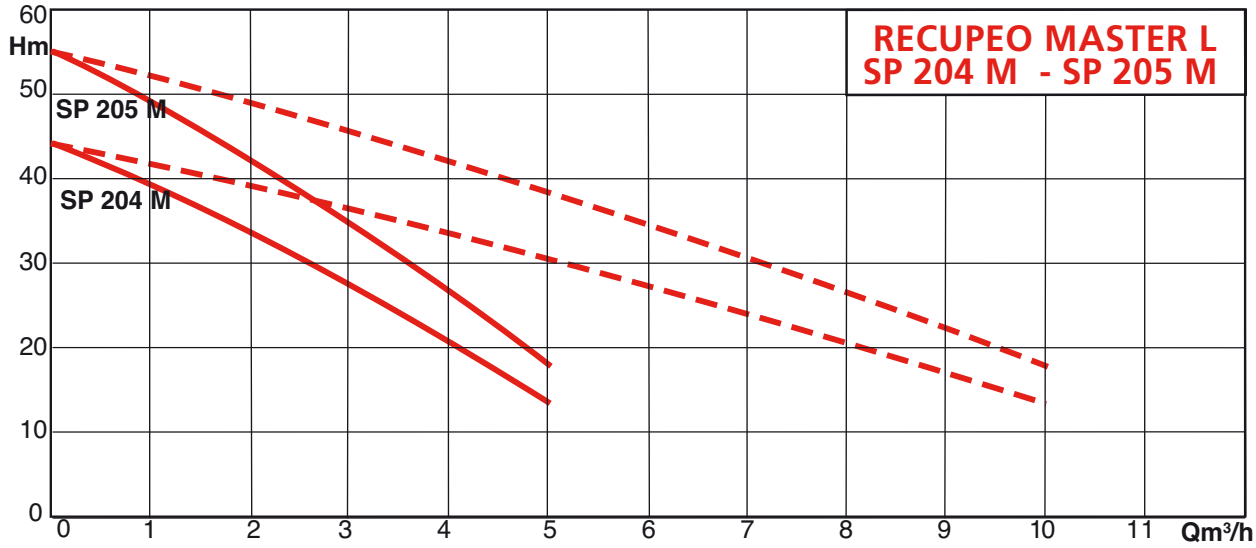

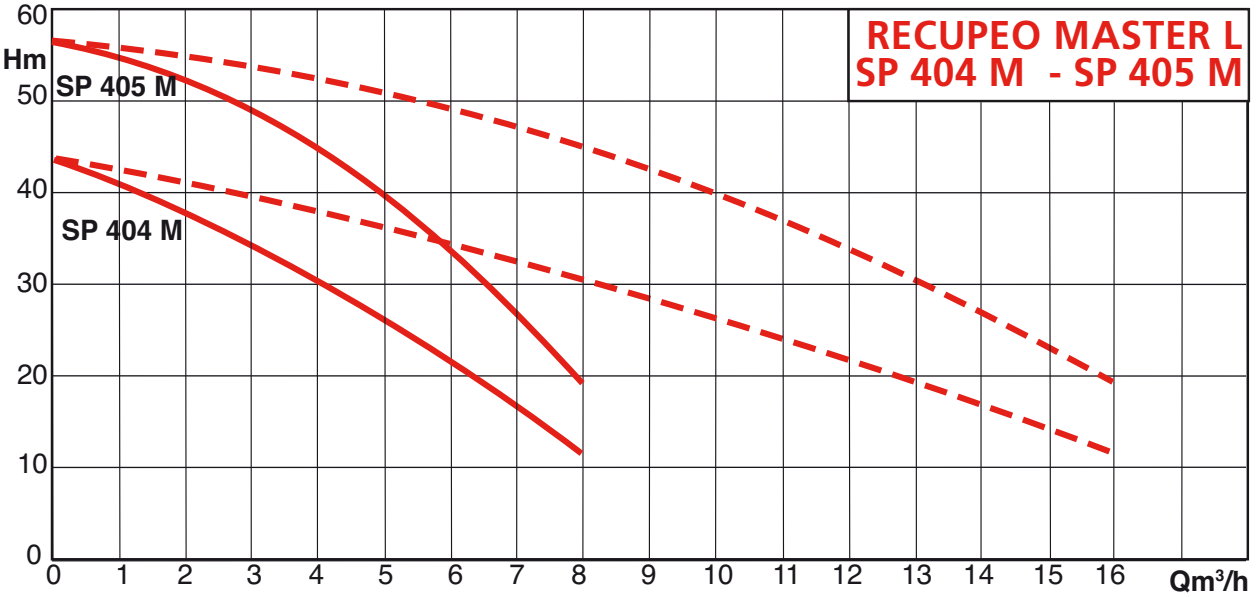

ELECTRICAL FEATURES

Model	References	number of pumps	number of stage per pump	P2 (kW)	Voltage	I total 2 pumps (A	Weight (kg)
SP 204 (1~)	2532591	2	4	0,55	1~230V	4,0	109
SP 205 (1~)	2532592	2	5	0,75	1~230V	5,3	109
SP 404 (1~)	2532593	2	4	0,75	1~230V	5,3	109
SP 405 (1~)	2532594	2	5	1,10	1~230V	7,2	109

RECUPEO MASTER

DESIGN

RECUPEO MASTER XL

All the electrical and hydraulic components and connected and assembled on a compact painted steel frame which is treated against corrosion.

- Automated RCH «Rain Control Hybrid» system with electronic management of booster pump by 4 - 20 mA pressure sensor, automatic control of rainwater / mains water supply by magnetic level sensor.
- Stainless steel 304 collector with 8 litre bladder tank and easy maintenance connection and 0 - 10 bar pressure gauge.
- Large buffer tank (400 litres) fitted with all connections, supply connector and overflow with siphon.
- 2 HYDROSON multistage non-self-priming pumps, insensitive to corrosion, which operate silently.
- Electricity supply: 3~400V + Neutral / 50Hz

Attention :
An immersed pump (3~400V / 50hz, max. 3A) in the tank is essential as a rainwater transfer pump. This prevents any suction problems.
The switch box requires the Neutral installation to supply some of the internal components with 230V.

BASIC CONSTRUCTION

Main parts	Material
Collectors	AISI 304 stainless steel
Buffer tank	MD polyethylene
Pump casing	AISI 304 stainless steel
Motor support lantern	Aluminium
Impellers	Noryl*
Suction cells	Noryl
Rotor shaft	Inox AISI 420
Mechanical seal	Impregnated carbon

*filled with 30% fibreglass

IDENTIFICATION

RECUPEO MASTER XL HY 204 T

- Rainwater manager
- Collective systems
- Model
- Pump type: HYDROSON 204 T

RECUPEO MASTER XL INSTALLATION DIAGRAM

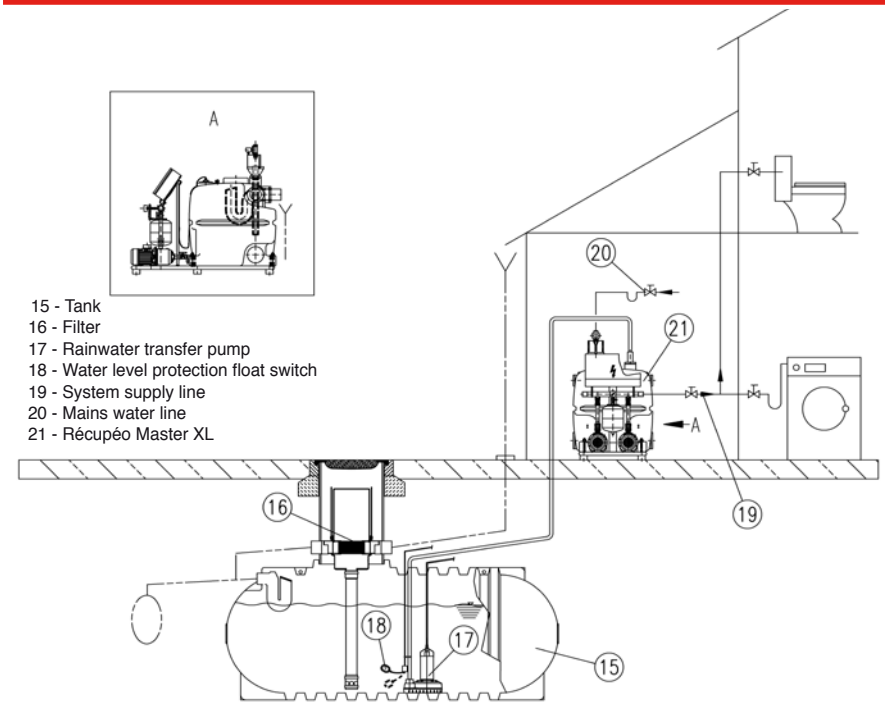

OPERATION

RECUPEO MASTER XL

- Rainwater supply system fitted with 2 overpressure pumps ready to be connected designed as a compact unit to fulfil the non-drinking water requirements of office blocks and buildings in the industrial sector.
- Fully automatic supply of rainwater thanks to the automatic, integrated coordination of an immersed transfer pump.
- The 400 litre buffer tank fitted with all the necessary accessories guarantees an optimum supply of drinking water according to the users' requirements when rainwater is not sufficient. It also guarantees perfect disconnection (type AA) from the mains water network according to the EN 1717 standard.
- The overpressure and transfer pump control system is fitted with a main switch, a pump-operated switch and an on/off/fault display for each pump as well as a warning system in the case of insufficient water. Connection of fault signals possible.
- Depending on the pressure and water requirements, the pumps are activated in cascading mode. Switching to the other pump in case of a fault in one of the pumps and parallel operation in case of major hydraulic demand.
- Anti-corrosion bladder tank to reduce cycles and optimise regulation.
- Cyclical permutation of pumps and automatic priming during long periods of inactivity.
- Operation and configuration of the RCP switch box by means of function buttons in a drop-down menu. LCD screen to display tank filling level (as a percentage), pressure and operating status of the system on a permanent basis.
- Switching to the other pump in case of a fault in one of the pumps and possibility of parallel operation to respond to peak consumption levels.

RECUPEO MASTER

RECUPEO MASTER XL DIMENSIONS

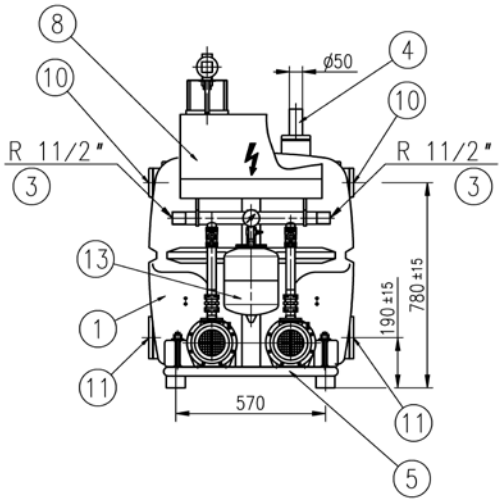

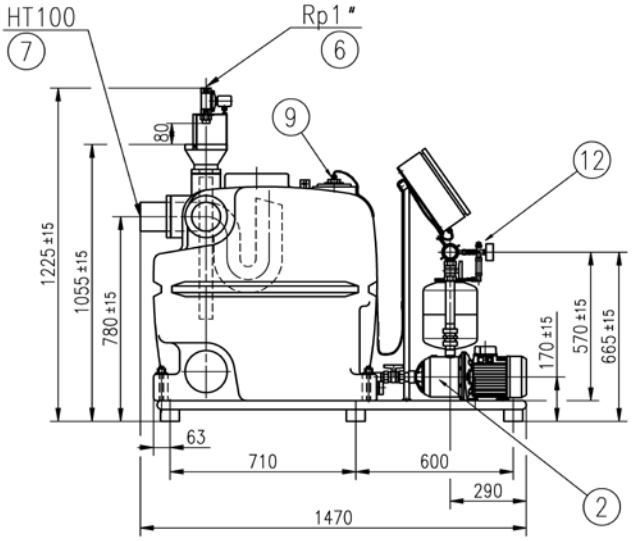

1 Buffer tank (400 litres)
2 Pumps
3 Discharge connection
4 Rainwater transfer pump connection
5 Frame
6 Mains water connector
7 Overflow connection (DN100)
8 RCH switch box
9 Magnetic level sensor
10 Upper pairing connection
11 Lower pairing connection
12 Pressure sensor and water level protection
13 Bladder tank

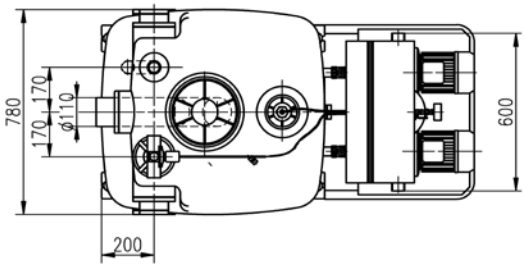

SWITCH BOX AND AUTOMATED SYSTEM

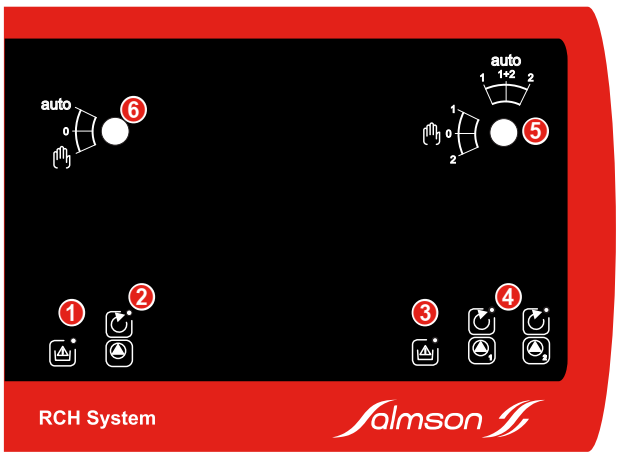

Système RCH

1 - Red LED: water level protection immersed pump
2 - Immersed pump operation/fault light
3 - Red LED: booster pump water level protection
4 - Green LEDs: Operation/fault light for pumps 1 & 2
5 - Control for pumps 1 & 2
6 - Immersed pump control

HYDRAULIC PERFORMANCES RECUPEO MASTER XL

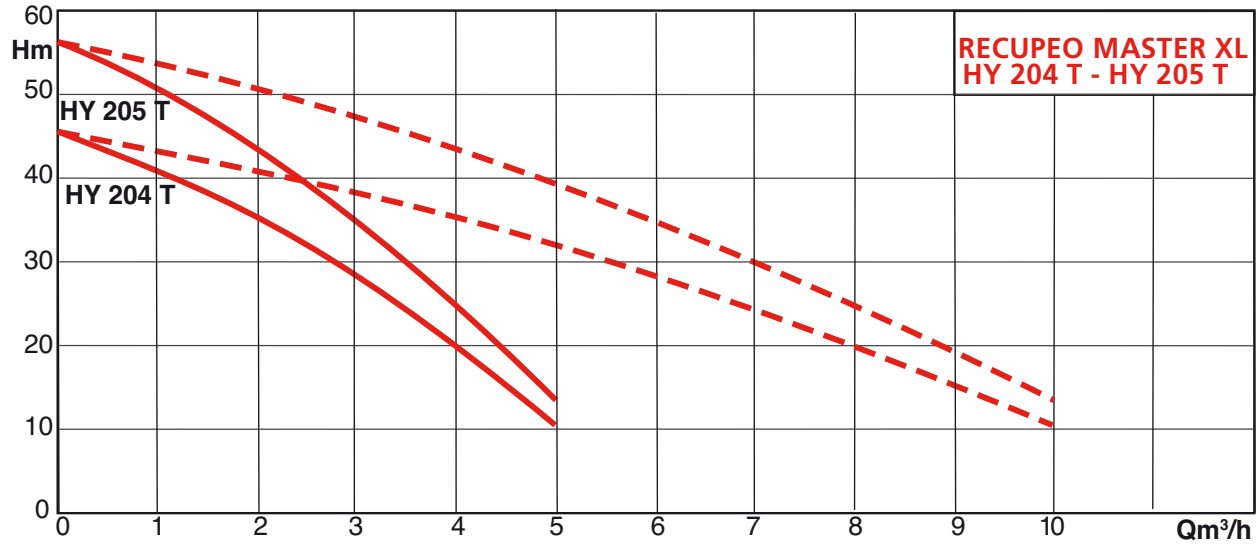

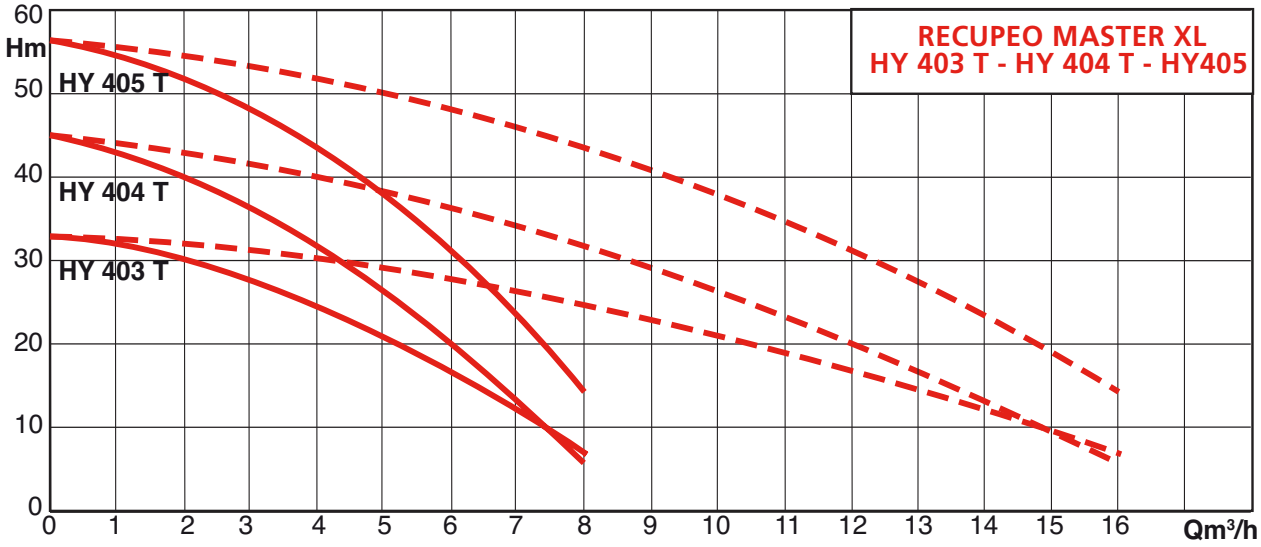

ELECTRICAL FEATURES

Model	References	number of pumps	number of stage per pump	P2 (kW)	Voltage	I total 2 pumps (A	Weight (kg)
HY 204 (3~)	2532586	2	4	0,55	3~400V	1,9	138
HY 205 (3~)	2532587	2	5	0,75	3~400V	2,1	138
HY 403 (3~)	2532588	2	3	0,55	3~400V	1,9	138
HY 404 (3~)	2532589	2	4	0,75	3~400V	2,1	138
HY 405 (3~)	2532590	2	5	1,10	3~400V	2,8	138

RECUPEO MASTER

SUPPLIES

RÉCUPÉO MASTER L :

Water level sensor (IPAE sensor)

• IPAE level probe



8 L bladder tank
Water level protection
Shut-off valves
Non-return valve at pump discharge

• Contactors - pressure sensor and water level protection

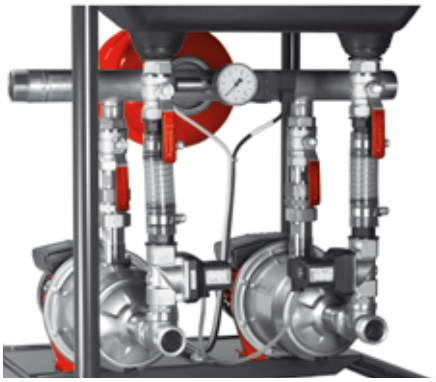

RÉCUPÉO MASTER XL :

8 L bladder tank
Shut-off valves
Non-return valve at pump discharge
Mains water connector
Magnetic water level sensor

• Buffer tank, mains water contactor and magnetic level sensor



FEATURES

a) Electrical

Récupéo Master L

- Single phase 230V - 50 Hz (M) with integrated thermal protection, automatic resetting.
- Condensateur intégré dans la boîte à borne.

Récupéo Master XL

- System supply 3~400V + Neutral (L1, L2, L3, N, PE).
- Transfer pump: 3~400V / 50Hz, 10A max. (type SBS-2-204).

b) Assembly

- Ground installation: system provided assembled on frame with height-adjustable shock absorbers.

c) Packaging

- On pallet and covered.

d) Maintenance

See operating instructions provided with RÉCUPÉO MASTER

ACCESSORIES

- Tank
- Self-cleaning filter (DN80 - DN100 groove)
- Float suction filter
- Suction pipe
- Transfer pump
- Floating suction

STANDARD EN 1717

Protection against drinking water pollution in internal networks and general requirements for for systems protecting against return pollution.

Récupéo Master L

Disconnected from drinking water network (overflow AB - EN13077)

Récupéo Master XL

Disconnected from drinking water network (overflow AA - EN13077)

PLAGES D'UTILISATION

Flow rates of up to:	**8 m³/h**
Manometric heads of up to:	**55 m CE**
Max. operating pressure:	**10 bar**
Max. ambient temperature:	**– 10° à + 70°C**
Température ambiante maxi :	**+ 40°C**
DN of ports:	**25 à 32**

HYDROSON

DOMESTIC MULTI-STAGE HORIZONTAL PUMPS

2-pole series - 50 Hz

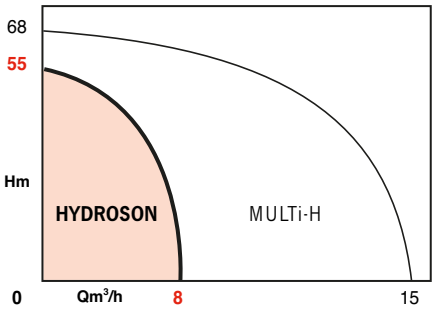

APPLICATIONS

Pumping of clean and non-muddy liquids in housing and agriculture sectors.

Boosting of mains water pressure or abstraction from tanks, shallow wells, rivers and lakes for:

- Water supply and distribution
- Watering and irrigation
- Cleaning

ADVANTAGES

- **Corrosion-proof components.**
- **Quiet operation: can be used in residential premises.**
- **High output, reduces the number of impellers: compact and economical pump with an extended service life.**
- **Withstands up to 10 bar of pressure.**

Certified ACS



• HYDROSON with single-phase motor



• Generously dimensioned motor bearings for an extended service life



• HYDROSON with three-phase motor

HYDROSON

DESIGN

• Hydraulic part

- Horizontal, centrifugal, not self-priming
- Multi-stage, with 2 to 5 stages.
- Axial intake and upward vertical discharge.
- Impellers fitted directly onto the extended motor shaft.
- Shaft passage sealed by a standardised mechanical seal.
- Hydraulic assembly fastened to lantern ring at 8 points.

• Motor

- Standard ventilated
- Extended shaft end
- Single-phase motor with integrated thermal protection and automatic reset (except for version -N); capacitor fitted in the terminal box.
- IE2 three-phase motor when P2 ≥ 0.75 kW.
- Rotor shaft guide bearings pre-greased for their service life.

Rotation speed :	2,900 rpm
Winding	3~ : 230-400 V
	1~ : 230 V
Frequency :	50 Hz (option 60 Hz)
Insulation class:	155 (F)
Protection class:	IP 54

BASIC CONSTRUCTION

Main parts	Material
Housing shell	AISI 304 stainless steel
Impellers	Noryl reinforced with 30% FG*
Stage casings	Noryl reinforced with 30% FG*
Pump shaft	AISI 431 stainless steel
Garniture mécanique	Graphite/Ceramic/Nitrile
Lantern ring mount	Aluminium
Pump-motor unit	Composite

* FG : FG: fibreglass

IDENTIFICATION

HYDROSON - 2 05 - M T

Pump code
HYDROSON

nominal flow rate in m^3/h

number of stages

T : three-phase motor
M : single-phase motor

HYDRAULIC RANGE FOR PRESELECTION

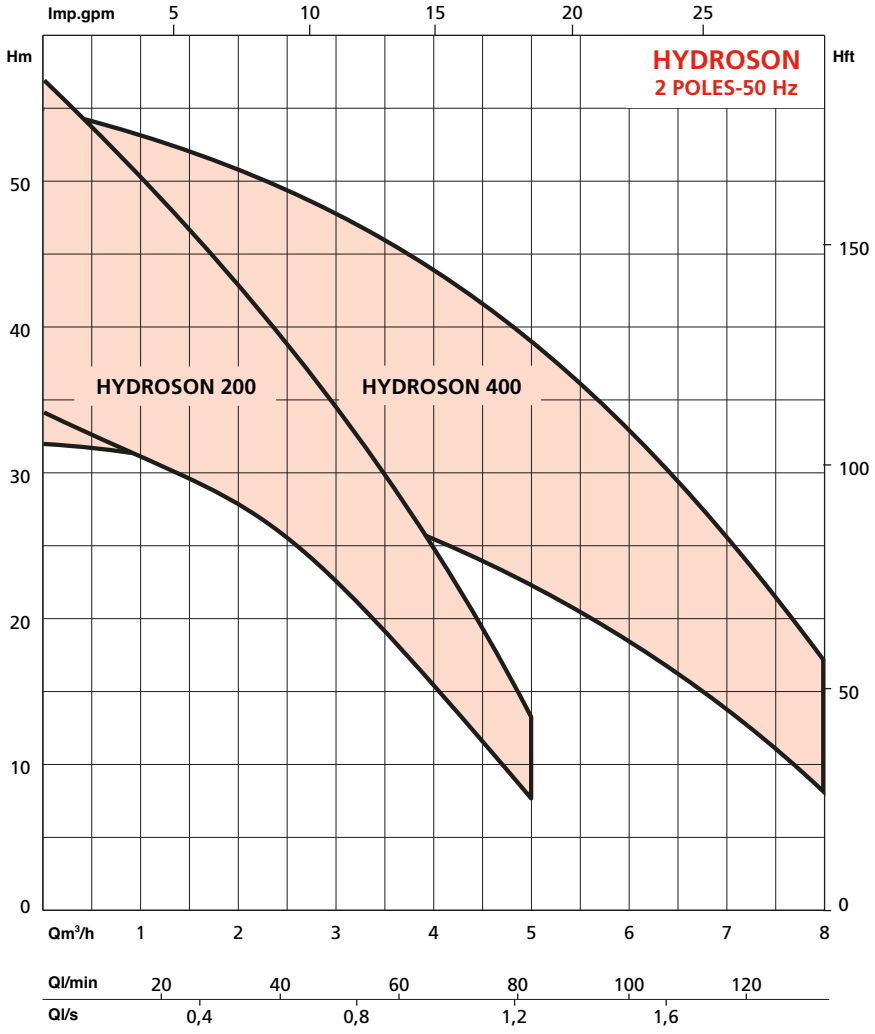

CROSS-SECTIONAL DIAGRAM

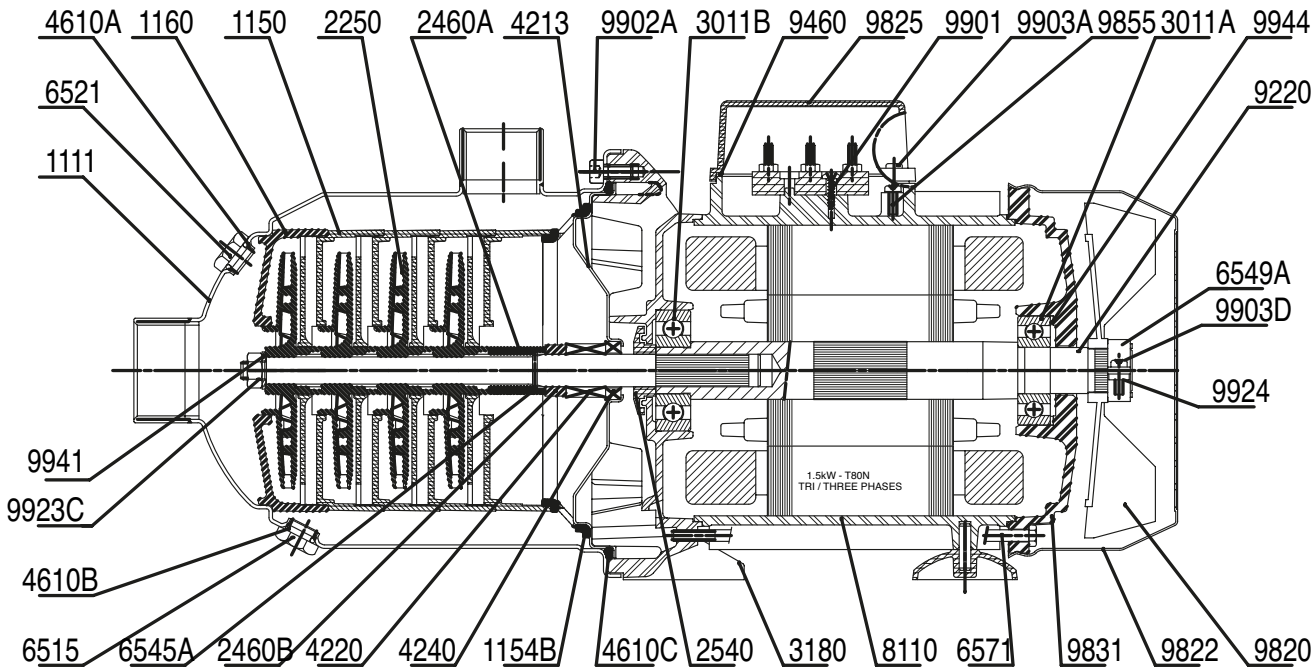

• Mechanical seal

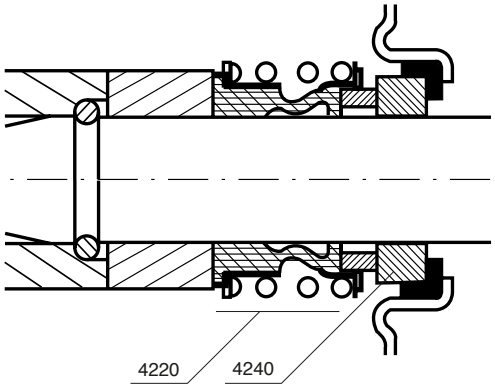

• Parts list

- 1111 - Housing
- • 1150 - Stage casing with return channel
- 1154 B - Centring device in return channel
- • 1160 - Stage casing without return channel
- • 2250 - Impeller
- 2460 A - Impeller shim
- 2460 B - Mechanical seal spacer
- 2540 - Deflector
- •3011 A - Fan end bearing
- •3011 B - Pump end bearing
- 3180 - Lantern ring
- 4213 - Throat bushing casing
- • 4220 - Rotating part | Mechanical seal
- • 4240 - Fixed part | Mechanical seal
- •4610 A - O-ring (filler plug)
- •4610 B - O-ring (drain plug)
- •4610 C - O-ring (housing-lantern ring)
- 6515 - Drain plug
- 6521 - Bleeder and filler plug
- •6545 A - Circlip (support ring)
- 6571 - Motor tie bolt
- • 8110 - Electric motor casing
- • 9220 - Rotor shaft
- • 9460 - Terminal block cover seal
- • 9820 - Fan
- 9822 - Fan housing
- • 9825 - Motor terminal block cover
- • 9830 - Front motor shroud
- • 9831 - Rear motor bearing
- 9902 A - Housing/bearing screw
- 9923 A - Housing/bearing nut
- 9923 C - Shaft end nut
- 9941 - Shaft end washer
- 9944 - Spring washer

(•) Recommended spare parts.

HYDROSON

HYDRAULIC PERFORMANCES

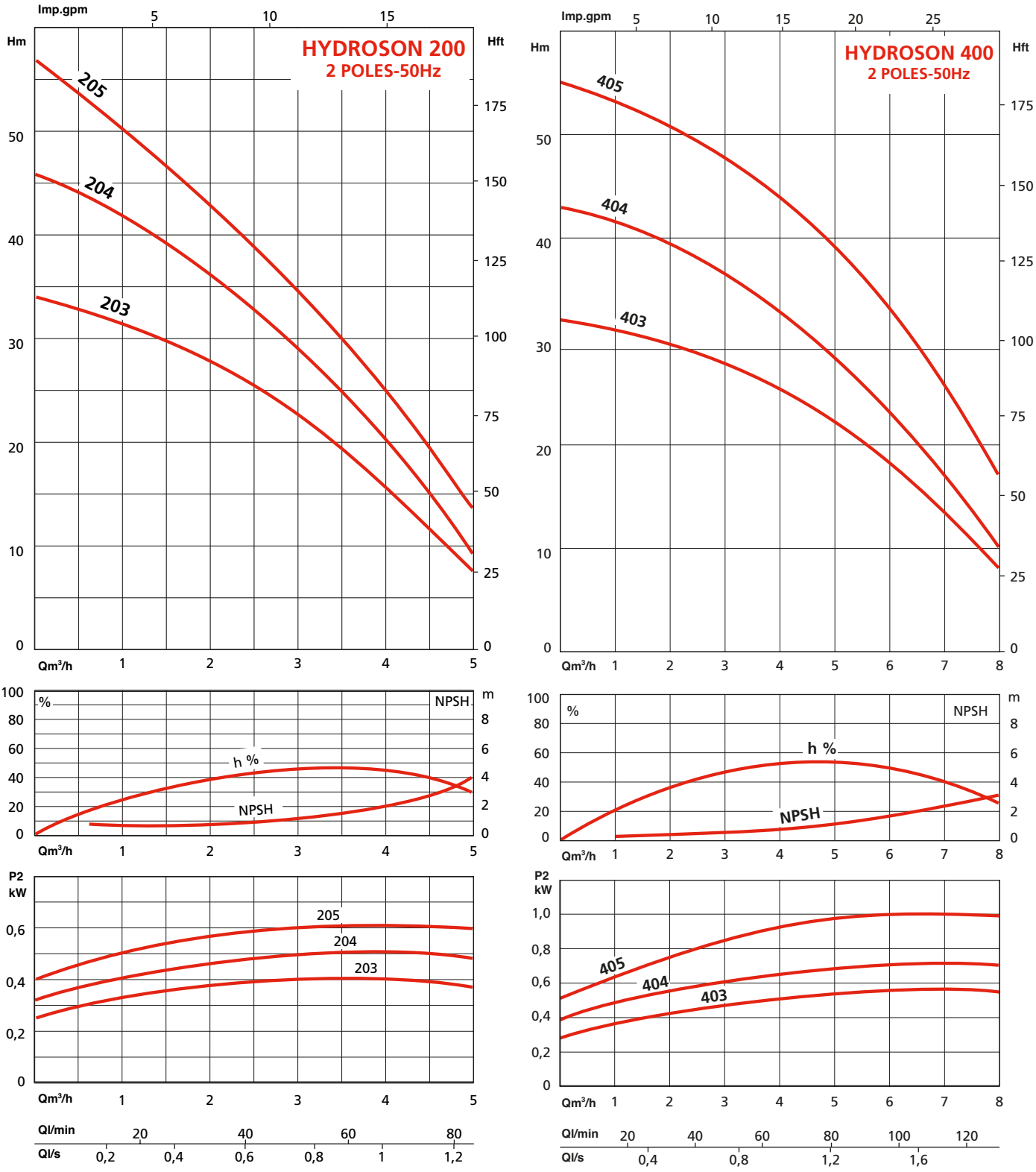

Hydraulic performance at actual speed

INSTALLATION DIAGRAMS

• Pump in suction mode

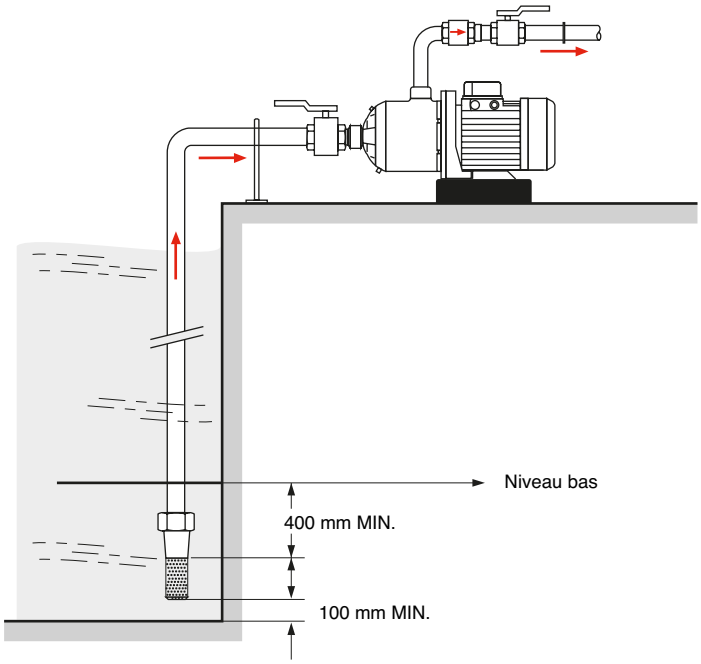

• Flooded suction pump fed by header tank or mains supply (ensure low-water protection system)

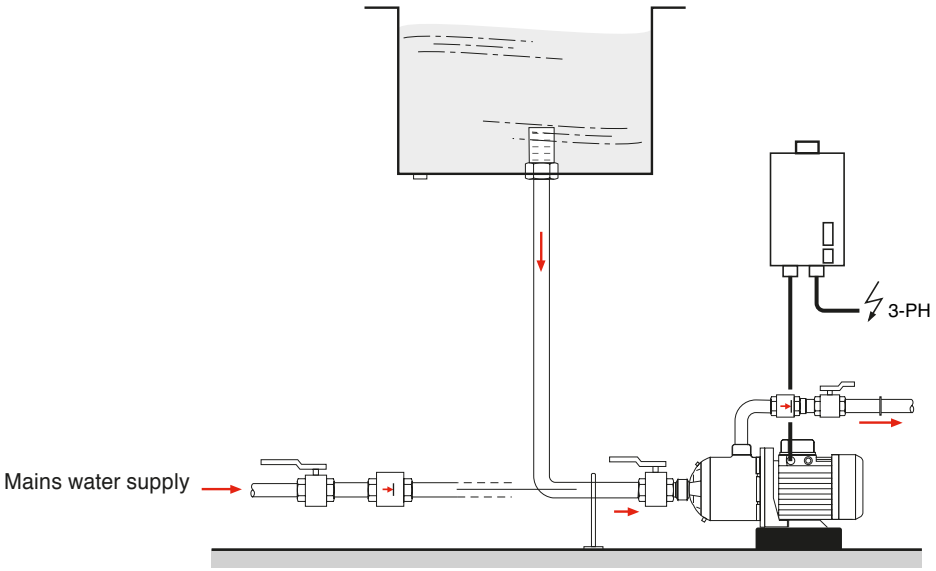

HYDROSON

ELECTRICAL AND DIMENSIONAL SPECIFICATIONS

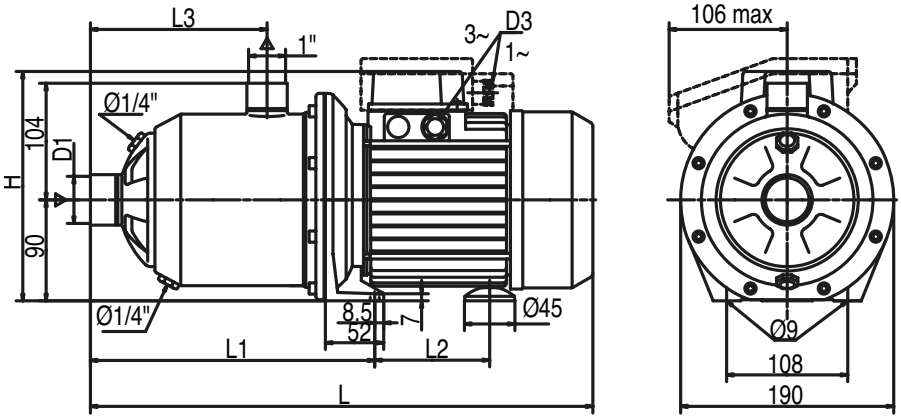

ORDER REFERENCE	MOTOR P2	Motor efficiency % 4/4	3/4	2/4	P1	In (A) 1X	3X	3X	Capacitor	PUMP H	L	L 1	L2	L 3	D1	D3	Weight
	kW				kW	230 V	230 V	400 V	µF	mm	mm	mm	mm	mm			kg
HYDROSON203-M	0,55	-	-	-	0,84	4	-	-	12	188	370	205	94	109,5	1"	PG11	8,8
HYDROSON204-M	0,55	-	-	-	0,84	4	-	-	12	188	418	253	94	157,5	1"	PG11	9,1
HYDROSON204-T	0,55	-	-	-	0,83	-	3,3	1,9	-	190	418	253	94	157,5	1"	PG11	8,2
HYDROSON205-M	0,75	-	-	-	1,09	5,1			16	216	423	253	88	157,5	1"	PG13,5	10,6
HYDROSON205N-T	0,75	77,4	77,4	76	1,11	-	3,3	1,9	-	219	457	253	110	157,5	1	1xM20	13
HYDROSON403-M	0,55	-	-	-	0,84	4			12	188	370	205	94	109,5	1¼"	PG11	9,4
HYDROSON403-T	0,55	-	-	-	0,83	-	3,3	1,9	-	190	370	205	94	109,5	1¼"	PG11	8,7
HYDROSON404-M	0,75	-	-	-	1,09	5,1	-	-	16	216	423	253	88	157,5	1¼"	PG13,5	10,6
HYDROSON404N-T	0,75	79,6	79,6	76	1,11	-	3,3	1,9	-	219	457	253	110	157,5	1¼	1xM20	13
HYDROSON405-M	1,1	-	-	-	1,51	7,2	-	-	30	224	448	253	104	157,5	1¼"	PG13,5	13,5
HYDROSON405N-T	1,1	79,6	79,6	78	1,57	-	4,8	2,8	-	219	457	253	110	157,5	1¼	1xM20	14,4

FEATURES

a) Electrical

- "T" types: 230-400 V - 50 Hz three-phase
- "M" types: 230 V - 50 Hz single-phase with capacitor installed in the terminal box.
- Three-phase motor MUST be protected by a slave switch.
- Connections to motor terminal block via cable gland.

Provide a switch and low-water protection box in both single-phase and three-phase.

b) Installation

- Attached to mounting block with foundation bolts.
- Installation of pump in suction mode with mandatory strainer foot valve, or flooded suction pump fed by storage tank or mains supply with low water protection system.
- Connection to pump by hose or rigid piping.
- The installation must allow for the protection of the pump from adverse weather conditions and frost (no direct exposure to rain or sun).

c) Packaging

Pump delivered in a carton without connection accessories.

d) Maintenance

Replacement of recommended spare wearing parts (•).

OPTIONS AND ACCESSORIES

- Shut-off valves
- Non-return valves
- Strainer foot valve
- Vibration-damping sleeves
- Suction kit
- Bladder tanks
- Water hammer arrester tanks
- LW (low-water protection) kit
- ACSON: On-Off control and low-water protection device.
- Three-phase motor protective slave switch…

OPERATING RANGES

Flow rates of up to:	**8 m³/h**
Manometric heads of up to:	**55 m**
Max. operating pressure:	**10 bar**
Max. temperature:	**+35°C**
DN suction :	**G1 - G1¼**
DN discharge:	**G1**

HYDROMINI HYDROSON

DOMESTIC BOOSTER PUMPS
2 pole - 50 Hz

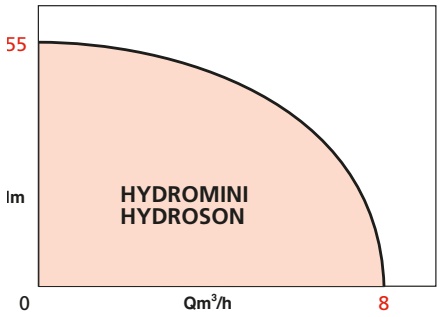

APPLICATIONS

Automatic distribution of pressurised water for domestic use:

- Water supply-distribution from a well, spring or storage tank.
- Irrigation - Watering.
- Raising the pressure of a weak mains system (if total pressure exceeds 4 bar: use the 8-litre tank).

For houses, rural dwellings, small farms, small-scale industries...

ADVANTAGES

- **Fully-assembled, wired and preset booster pumps, ready for use.**
- **Easy installation: one electrical connection and two hydraulic couplings.**
- **Corrosion-proof components.**
- **Interchangeable butyl, food-grade bladder tank.**
- **Integrated thermal protection on all models.**
- **Easy, low-cost operation and maintenance.**

Certified ACS



• HYDROMINI HYDROSON

Installation diagram

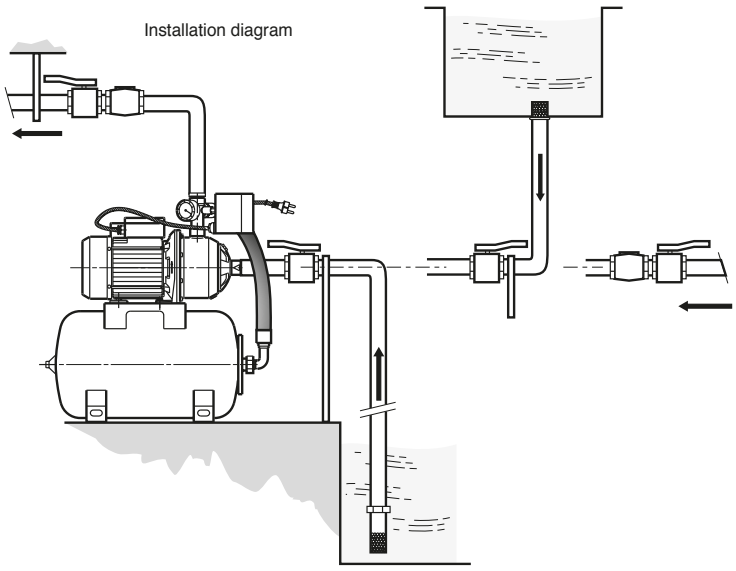

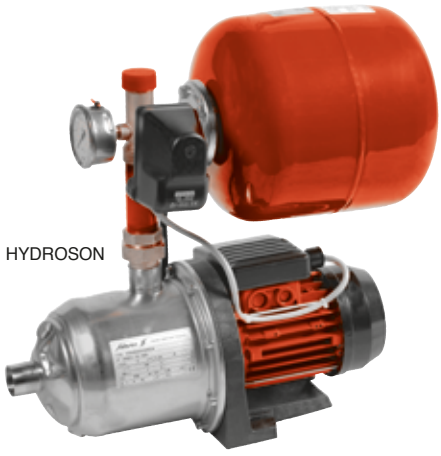

• HYDROMINI HYDROSON
- 8-litre tank

HYDROMINI HYDROSON

DESIGN

Pre-assembled, ready-to-install automatic booster pumps, equipped with:

- HYDROSON single-phase pump (204; 205; 405),
- Interchangeable bladder tank (8, 20, 50 and 100 l),
- Filler plug
- Drain plug
- Electric cable and plug
- Pump/tank connection hose
- Inflation valve
- Pressure gauge and pressure switch.
- Built-in thermal protection in winding
- automatic reset after cooling.

Factory preset on-off pressure settings on the contactor or pressure switch.
STANDARDS: EN 60.335.2.41

OPTIONS AND ACCESSORIES

- Foot valve - strainer (max. flow section 1 mm).
- 1/4-turn valve on suction line.
- 1/4-turn valve on discharge line.
- Non-return valve.
- Piping mount.
- Low-water protection kit protection (connection to mains supply.
- Float switch or pressure switch

• Low-water protection kit for connecting HYDROMINI to the mains supply.



TANKS

Mean flow rate: 2 000 à 8 000 l/h
Capacity: 20 à 100 l
Max. tank pressure: 10 bar

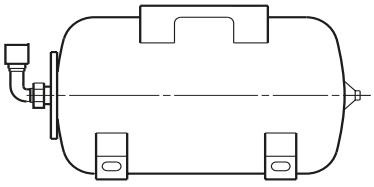

HYDRAULIC PERFORMANCE

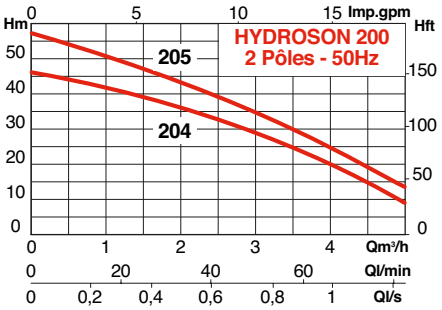

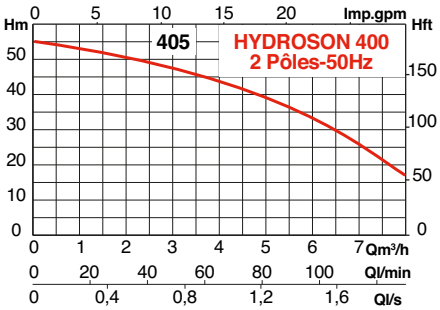

ELECTRICAL AND DIMENSIONAL SPECIFICATIONS

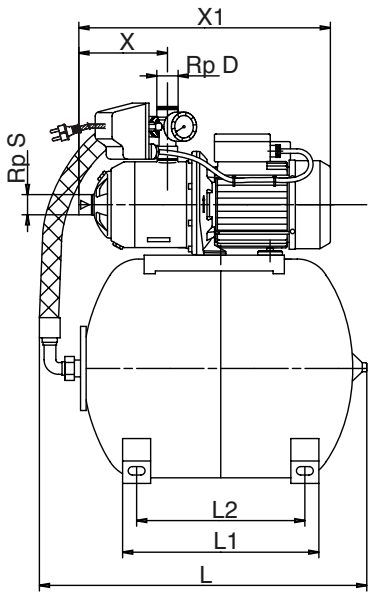

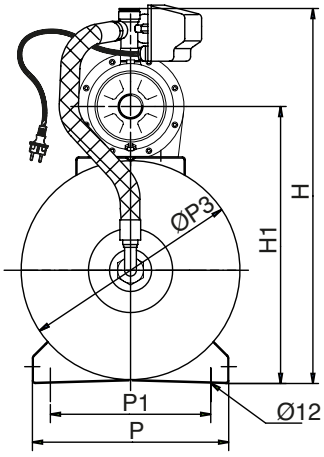

ORDER REFERENCE	Pump	Volume	H	L	P	H1	L1	L2	P1	X	X1
		L	mm	mm	mm	mm	mm	mm	mm	mm	mm
HY-204-M-H-20	HY-204	20	570	500	280	385	220	170	230	158	423
HY-204-M-H-50	HY-204	50	655	700	360	470	350	300	280	158	423
HY-204-M-H-100	HY-204	100	760	820	320	585	370	310	260	158	423
HY-205-M-H-50	HY-205	50	655	700	360	470	350	300	280	158	423
HY-205-M-H-100	HY-205	100	760	820	320	585	370	310	260	158	423
HY-405-M-H-100	HY-405	100	760	820	320	585	370	310	260	158	448

OPERATING RANGES

Flow rates of up to:	**13 m³/h**
Manometric heads of up to:	**67 m CE**
Max. operating pressure:	**10 bar**
Max. intake pressure:	**6 bar**
Temperature range:	**– 15° to + 90°C**
Max. ambient temperature:	**+ 40°C**
DN (nominal diameter) of ports:	**G1" to G1"1/2**

MUH

HORIZONTAL MULTI-STAGE PUMPS

2 pole - 50 Hz

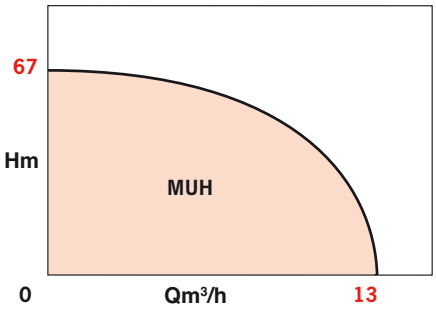

APPLICATIONS

Pumping of clean, non-muddy liquids in the housing, agricultural and industrial sectors:
- Supply - Boosting
- Watering - Irrigation
- Washing stations
- Heating - Air conditioning

And for incorporation into all modular systems.

Abstraction from wells, springs, rivers, ponds...

BENEFITS

EFFICIENCY / RELIABILITY
- **IE2 Motor .**
- **Optimal reliability: high outputs thanks to the impeller profile, which reduces the number of stages, the sizes of the shafts and the axial thrusts.**
- **Stainless steel impellers and stages, cast iron pump housings.**
- **Suction rings between very thick cells: impervious to thermal expansion and eliminates the risk of seizing.**

INSTALLATION
- **Compact pump of one-piece design, requires little space and performs economically and quietly.**
- **Easy installation.**

MAINTENANCE
- **Standardised mechanical seal withstands max. +90°C without any maintenance.**
- **Motor bearing fitted in the front shroud - generously dimensioned and leak-tight.**

Certified ACS



• MUH 902N



• MUH 105



• MUH 504N

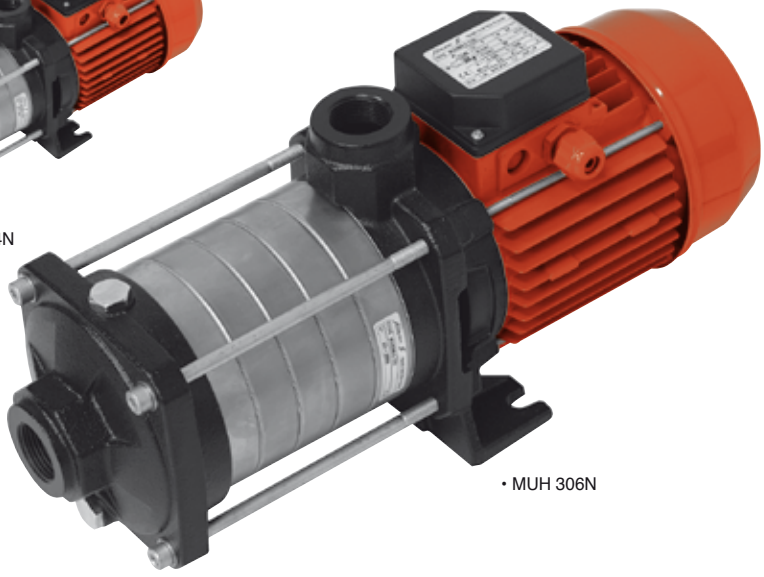

• MUH 306N

MUH

DESIGN

• Hydraulic part

- Horizontal, centrifugal, not self-priming.
- Multi-stage, 2 to 7 stages.
- Axial intake and vertical, upward delivery.
- Impellers fitted directly onto the extended motor shaft.
- Standardised mechanical seal ensures leak-tightness of shaft passage.

• Motor

- Standard ventilated
- With extended shaft end
- Single-phase motor: capacitor integrated into the terminal box.
- Rotor-shaft guide bearings lubricated for life.

Rotation speed:	2900 rpm
Three-phase winding:	230-400 V
Single-phase:	230 V
Frequency:	50 Hz (optional 60 Hz)
Insulation class:	155 (F)
Protection class:	IP 54

HYDRAULIC PRESELECTION RANGE

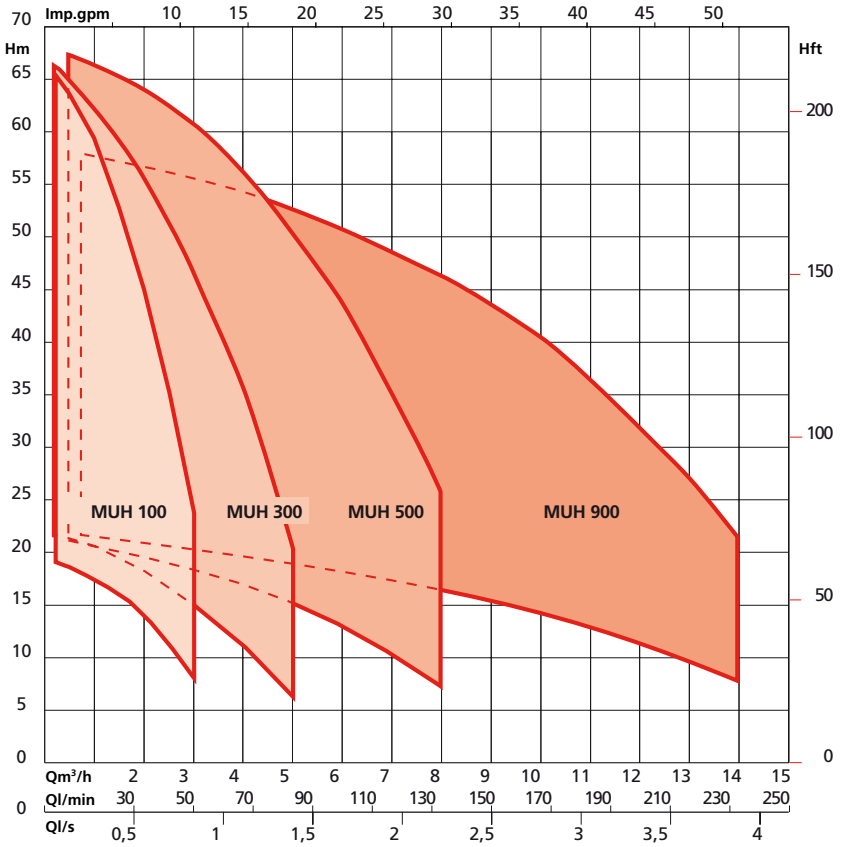

BASIC CONSTRUCTION

Main parts	Material
Pump casing	EN GJL250
Impellers	304 stainless steel
Cells (stage housing)	304 stainless steel
Pump shaft	stainless steel
Cell centring device	304 stainless steel
Mechanical seal	Carbon/Silicon carbide
O-rings	EPDM ethylene propylene
Fixing-support bearing	EN GJL250

IDENTIFICATION

MUH - 3 02 N - E - M / 6 / OEM / XX / B

- Pump family
- Nominal flowrate in m³/h (at 50 hz / 2 pole)
- Number of stages
- IE2 motor
- E = O-rings: EPDM
  V = O-rings: VITON
- M = Single-phase
  M11 = Single-phase 110 V
  T = Three-phase
- 6 = 60 HZ
  Nothing = 50HZ
- OEM : Original Equipement Manufacturer
- Technical definition code
- Version index

SECTIONAL DIAGRAM

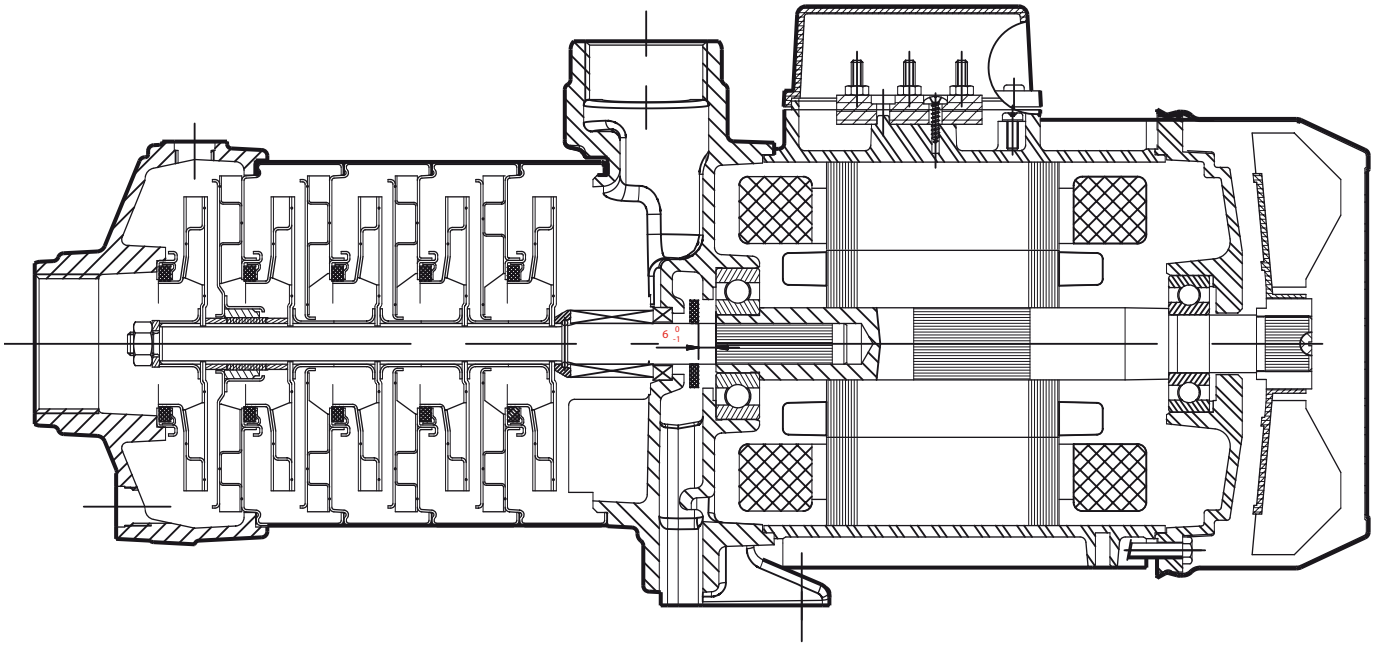

MUH

HYDRAULIC PERFORMANCE – 100 AND 300 SERIE

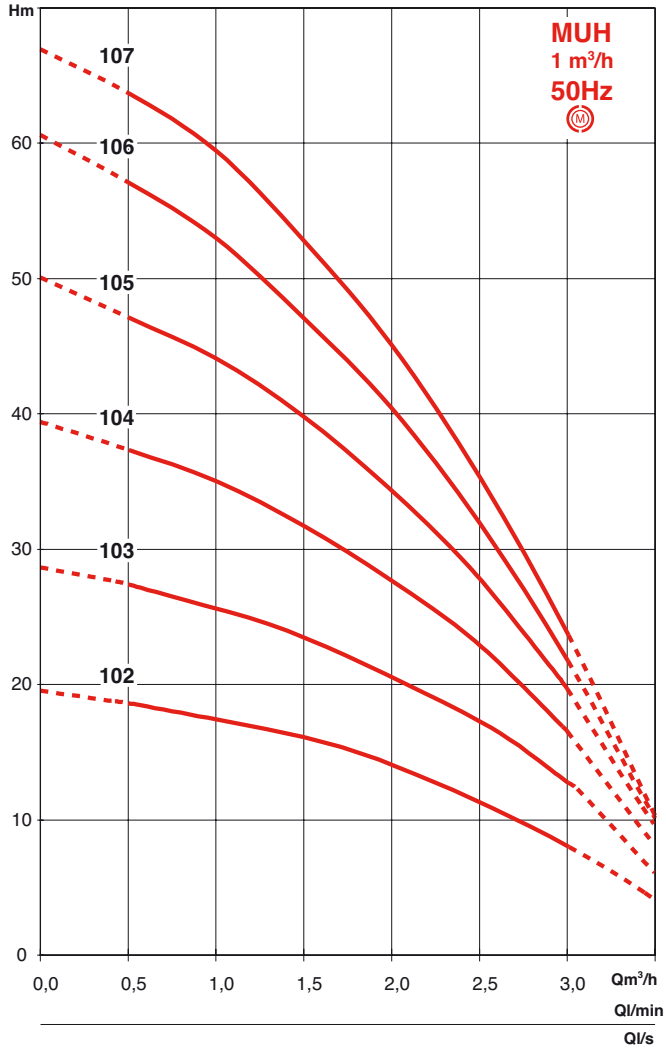

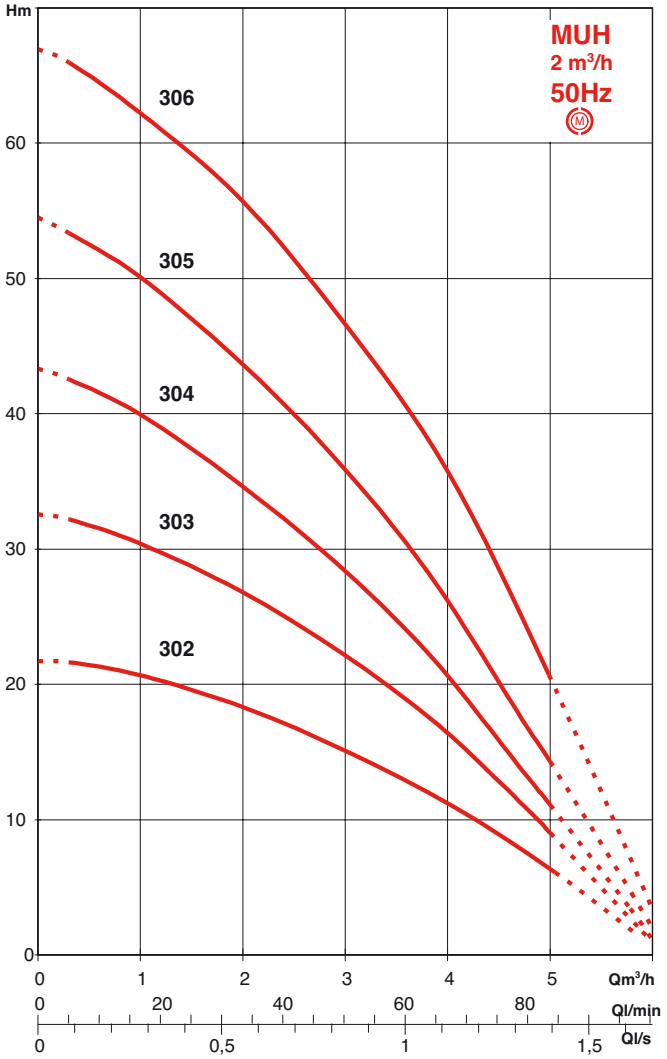

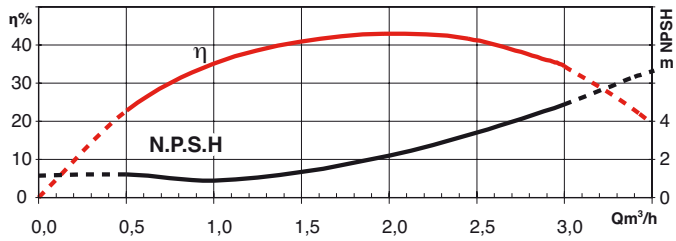

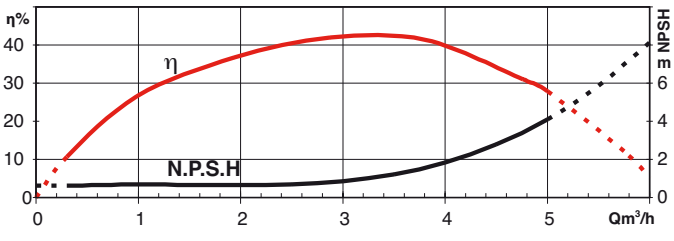

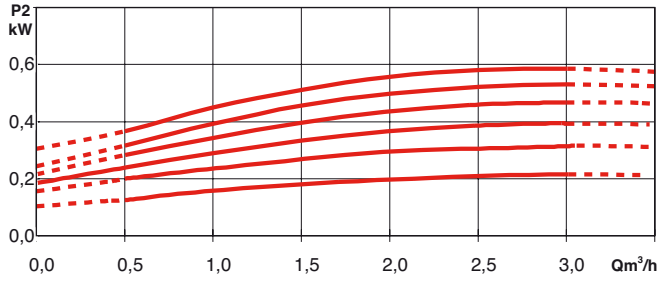

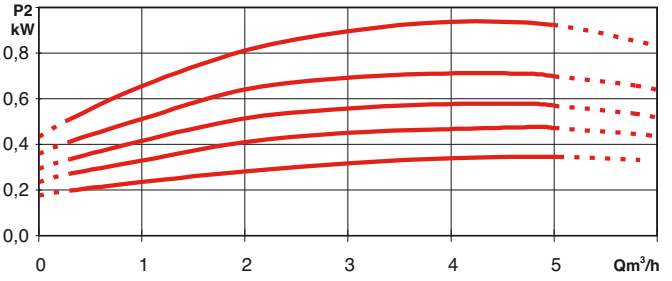

HYDRAULIC PERFORMANCE – 100 AND 300 SERIE

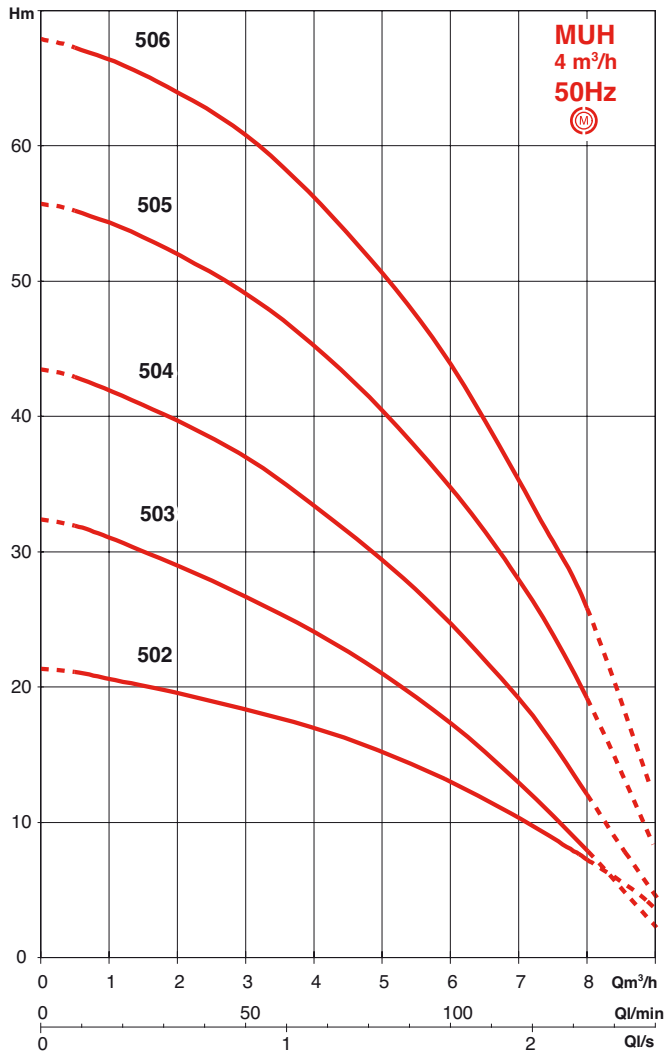

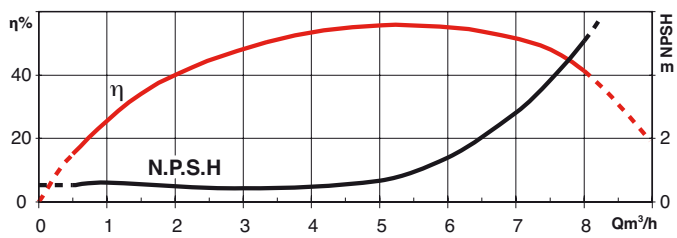

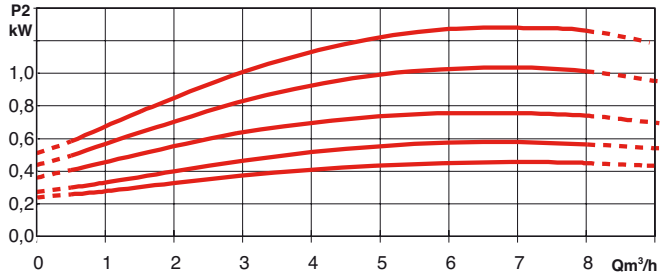

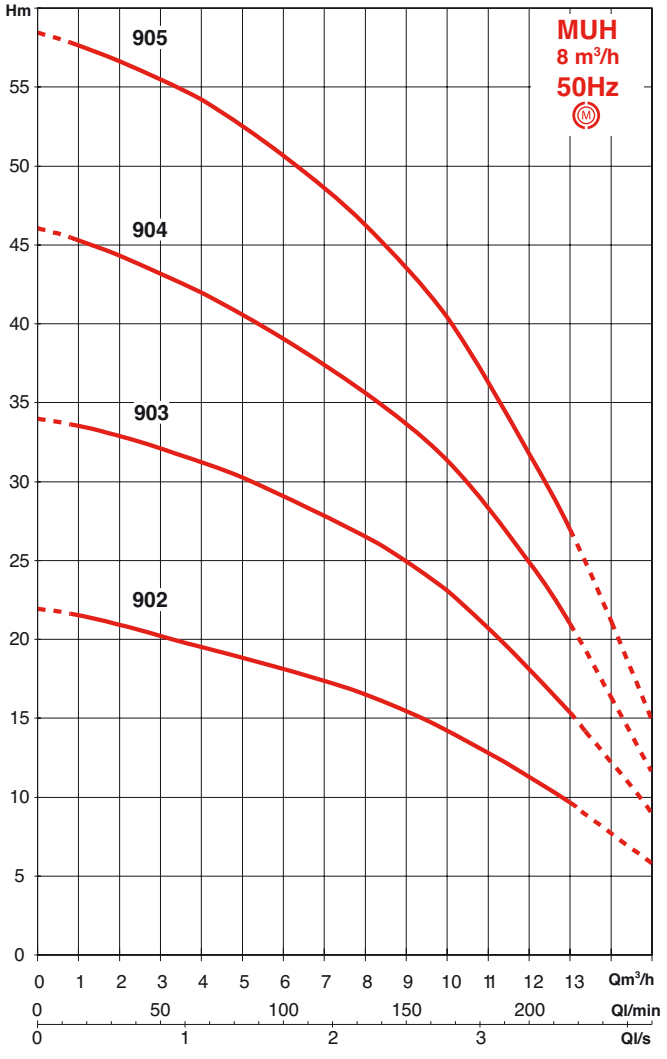

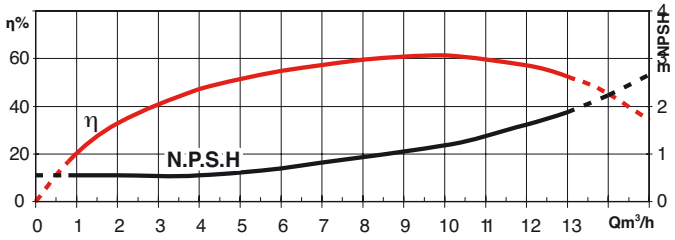

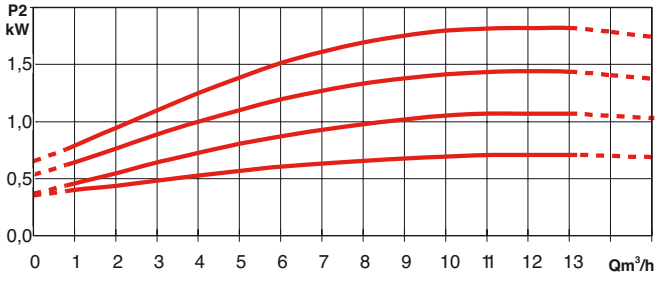

MUH

INSTALLATION DIAGRAMS

• **Pump in suction mode**

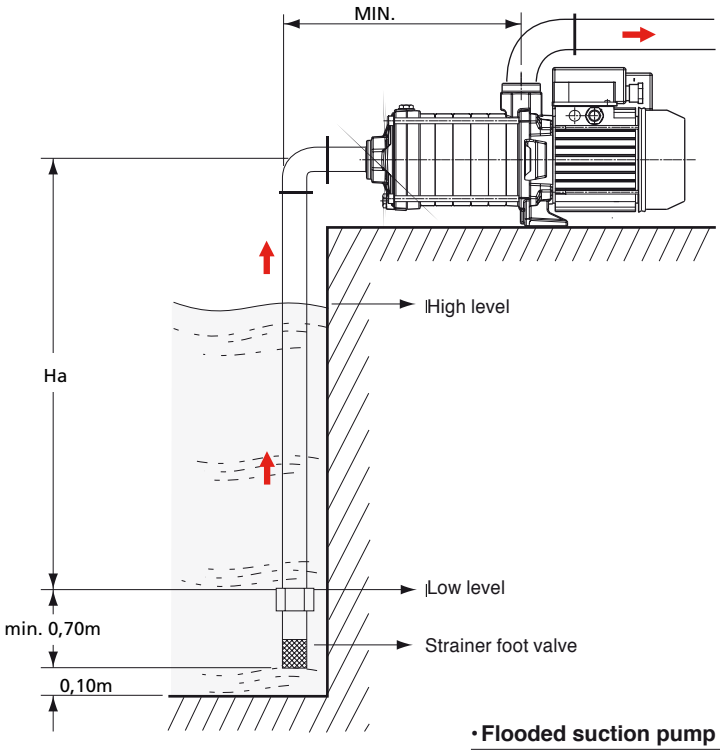

Max. suction heads (Ha) and min. flooded heads (Hc) at the pump's nominal flowrate.

Fluid temperature	MUH 100		MUH 300/500/900	
	Ha mCL	Hc mCL	Ha mCL	Hc mCL
+ 20°C	7	---	7	---
+ 50°C	6	---	6	---
+ 80°C	2,2	---	3	---
+ 90°C	---	8,1	---	7

These values do not take account of losses of head in the suction pipe.

• **Flooded suction pump** on storage tank or mains water system (with low water protection kit)

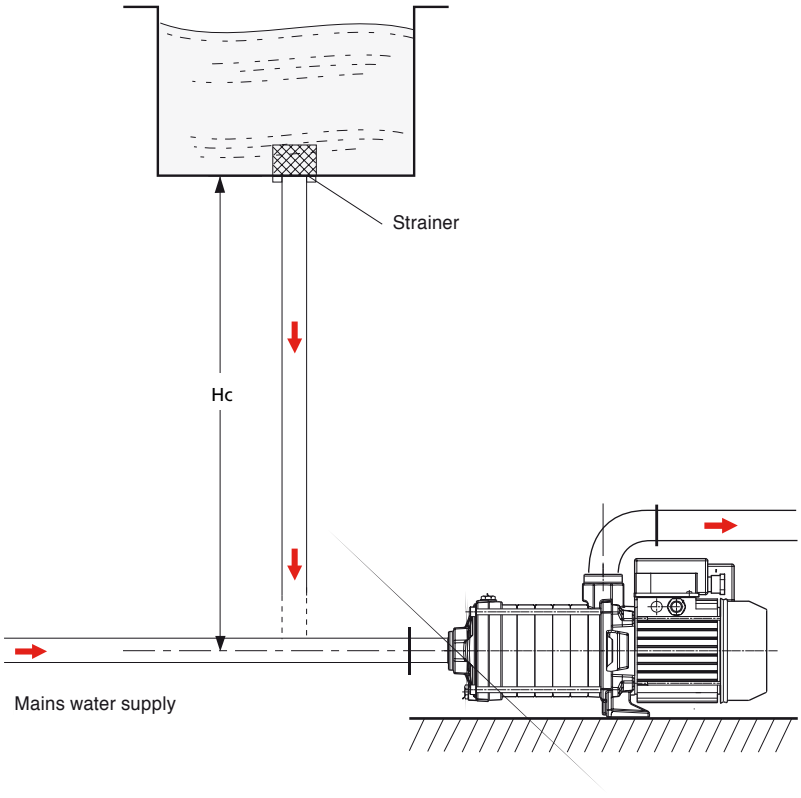

ELECTRICAL AND DIMENSIONAL SPECIFICATIONS

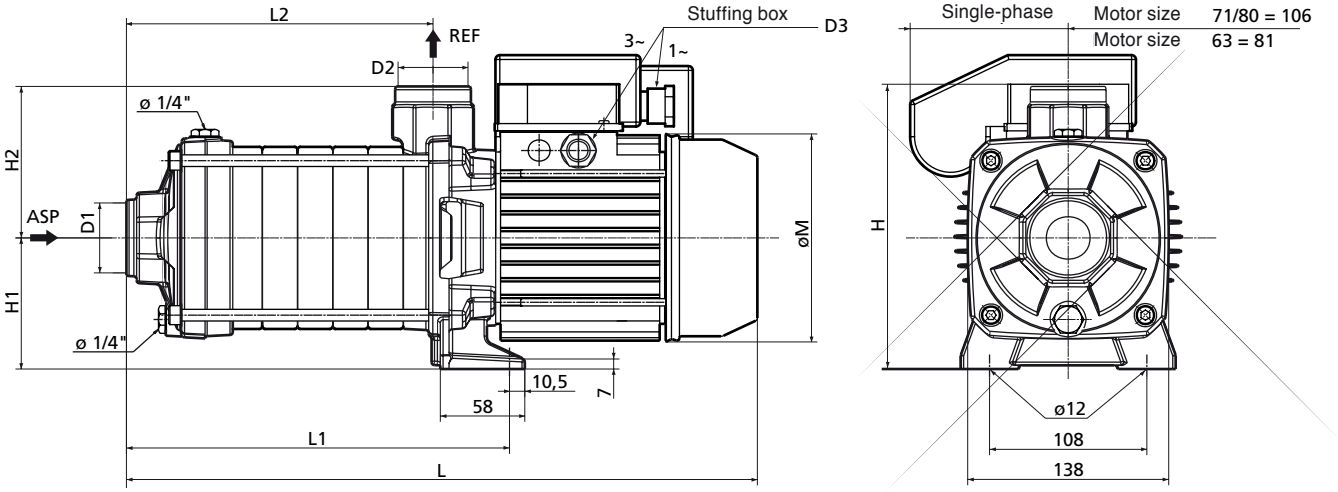

TYPE	~	Efficiency according to load (%)			V	V	A	A	P2	capaci-tor	H	H1	H2	L	L 1	L 2	M	D1	D2	D3	mass
		4/4	3/4	2/4			1x230V-3xΔ230	3xY400	kW	μF	mm	mm	mm	mm	mm	mm	mm			mm	kg
MUH102-E-M	1	-	-	-	230	-	4	-	0,55	12	190	90	104	321	156	103	126	1”	1”	11	12,1
MUH103-E-M	1	-	-	-	230	-	4	-	0,55	12	190	90	104	341	176	123	126	1”	1”	11	12,7
MUH104-E-M	1	-	-	-	230	-	4	-	0,55	12	190	90	104	362	197	143	126	1”	1”	11	13,3
MUH105-E-M	1	-	-	-	230	-	4	-	0,55	12	190	90	104	382	217	163	126	1”	1”	11	13,9
MUH106-E-M	1	-	-	-	230	-	4	-	0,55	12	190	90	104	402	237	184	126	1”	1”	11	14,5
MUH107-E-M	1	-	-	-	230	-	4	-	0,55	12	190	90	104	422	257	204	126	1”	1”	11	15,1
MUH302-E-M	1	-	-	-	230	-	4	-	0,55	12	190	90	104	332	167	114	126	1”	1”	11	12,3
MUH303-E-M	1	-	-	-	230	-	4	-	0,55	12	190	90	104	356	191	138	126	1”	1”	11	13
MUH304-E-M	1	-	-	-	230	-	4	-	0,55	12	190	90	104	381	216	162	126	1”	1”	11	14
MUH305-E-M	1	-	-	-	230	-	5,1	-	0,75	16	216	90	104	409	240	186	145	1”	1”	13,5	18
MUH306-E-M	1	-	-	-	230	-	7,2	-	1,1	30	224	90	104	458	264	211	162	1”	1”	13,5	21
MUH502-E-M	1	-	-	-	230	-	4	-	0,55	12	190	90	104	332	167	114	126	1 1/4”	1”	11	12,3
MUH503-E-M	1	-	-	-	230	-	4	-	0,55	12	190	90	104	356	191	138	126	1 1/4”	1”	11	13
MUH504-E-M	1	-	-	-	230	-	5,1	-	0,75	16	216	90	104	394	216	162	145	1 1/4”	1”	13,5	19
MUH505-E-M	1	-	-	-	230	-	7,2	-	1,1	30	224	90	104	434	240	186	162	1 1/4”	1”	13,5	18,2
MUH506-E-M	1	-	-	-	230	-	9,2	-	1,5	40	224	90	104	458	264	211	162	1 1/4”	1”	13,5	22
MUH902-E-M	1	-	-	-	230	-	5,1	-	0,75	16	216	90	104	342	173	120	145	1 1/2”	1 1/4”	13,5	17
MUH903-E-M	1	-	-	-	230	-	7,2	-	1,1	30	224	90	104	397	203	150	162	1 1/2”	1 1/4”	13,5	16,1
MUH904-E-M	1	-	-	-	230	-	9,2	-	1,5	40	224	90	104	429	234	180	162	1 1/2”	1 1/4”	13,5	18,2
MUH102-E-T	3	-	-	-	Δ230	Y400	3	1,7	0,55	-	190	90	104	321	156	103	126	1”	1”	11	12,1
MUH103-E-T	3	-	-	-	Δ230	Y400	3	1,7	0,55	-	190	90	104	341	176	123	126	1”	1”	11	12,7
MUH104-E-T	3	-	-	-	Δ230	Y400	3	1,7	0,55	-	190	90	104	362	197	143	126	1”	1”	11	13,3
MUH105-E-T	3	-	-	-	Δ230	Y400	3	1,7	0,55	-	190	90	104	382	217	163	126	1”	1”	11	13,9
MUH106-E-T	3	-	-	-	Δ230	Y400	3	1,7	0,55	-	190	90	104	402	237	184	126	1”	1”	11	15,5
MUH107-E-T	3	-	-	-	Δ230	Y400	3	1,7	0,55	-	190	90	104	422	257	204	126	1”	1”	11	15,1
MUH302-E-T	3	-	-	-	Δ230	Y400	3	1,7	0,55	-	190	90	104	332	167	114	126	1”	1”	11	12,3
MUH303-E-T	3	-	-	-	Δ230	Y400	3	1,7	0,55	-	190	90	104	356	191	138	126	1”	1”	11	13
MUH304-E-T	3	-	-	-	Δ230	Y400	3	1,7	0,55	-	190	90	104	381	216	162	126	1”	1”	11	14
MUH305N-E-T	3	79	78	76	Δ230	Y400	3,2	1,85	0,75	-	219	90	104	443	240	186	146	1”	1”	11	19
MUH306N-E-T	3	80,5	80,5	78	Δ230	Y400	4,3	2,5	1,1	-	219	90	104	468	264	211	146	1”	1”	11	16,9
MUH502-E-T	3	-	-	-	Δ230	Y400	3	1,7	0,55	-	190	90	104	332	167	114	126	1 1/4”	1”	11	12,3
MUH503-E-T	3	-	-	-	Δ230	Y400	3	1,7	0,55	-	190	90	104	356	191	138	126	1 1/4”	1”	11	13
MUH504N-E-T	3	79	78	76	Δ230	Y400	3,2	1,85	0,75	-	219	90	104	419	216	162	146	1 1/4”	1”	11	18,8
MUH505N-E-T	3	80,5	80,5	78	Δ230	Y400	4,3	2,5	1,1	-	219	90	104	443	240	186	146	1 1/4”	1”	11	16,7
MUH506N-E-T	3	82	82	80	Δ230	Y400	5,7	3,3	1,5	-	240	90	104	511	264	211	172	1 1/4”	1”	13,5	22,4
MUH902N-E-T	3	79	78	76	Δ230	Y400	3,2	1,85	0,75	-	219	90	104	377	173	120	146	1 1/2”	1 1/4”	11	18,2
MUH903N-E-T	3	80,5	80,5	78	Δ230	Y400	4,3	2,5	1,1	-	219	90	104	407	203	150	146	1 1/2”	1 1/4”	11	16,1
MUH904N-E-T	3	82	82	80	Δ230	Y400	5,7	3,3	1,5	-	240	90	104	480	234	180	172	1 1/2”	1 1/4”	13,5	21,9
MUH905N-E-T	3	84	84	82	Δ230	Y400	7,1	4,1	2,2	-	240	90	104	510	264	210	172	1 1/2”	1 1/4”	13,5	24,4

MUH

ACCESSORIES

• ACSON : on/off control and low-water protection device.



• Protective slave switch for three-phase motor



• Surge tank



• Bladder tank



• Shut-off valve



• Strainer foot valve



• Non-return valve



• Vibration-damping sleeves



• Vibration-damping sleeves



FEATURES

a) Electrical

- IE2 “T” types: 230-400 V - 50 Hz three-phase
- “M” types: - 230 V - 50 Hz single-phase with capacitor integrated into the terminal box.
- Three-phase motors must be protected by a slave switch.
- Stuffing box used for connections to the motor terminal box.

b) Fitting

- On solid base using foundation bolts.
- Installation of pump in suction mode with compulsory strainer foot valve, or flooded suction mode on storage tank , or mains water system with low water protection kit.
- Connection to pump via a flexible hose or rigid piping.
- The installation must allow for the protection of the pump against adverse weather conditions and frost (avoid direct exposure to rain or sun).

c) Packaging

Pump delivered in cardboard packaging, without connection fittings.

RECOMMENDED ACCESSORIES

- Shut-off valves
- Non-return valves
- Strainer foot valve
- Vibration-damping sleeves
- Suction kit
- Bladder or galvanised tanks
- Surge tanks
- ME low-water protection kit
- ACSON: on/off control and low-water protection device.
- Protective slave switch for three-phase motor…

OPERATING RANGES

Flow rates of up to:	26 m³/h
Manometric heads of up to:	275 m
Max. delivery pressure:	16, 25 & 30 bar
Max. suction pressure:	10 bar
Temperature range:	– 20° à + 120°**C
Max. ambient temperature:	+ 40°C
Ports:	G1"to G2" or DN25 to DN50
Reference MEI*:	≥ 0,70

*Minimum Efficiency Index

** according to mechanical seal

NEXIS V2/4/6/10/16

STAINLESS STEEL VERTICAL HIGH-EFFICIENCY MULTI-STAGE PUMPS

In-line series - 50 Hz

New generation of multi-stage pumps

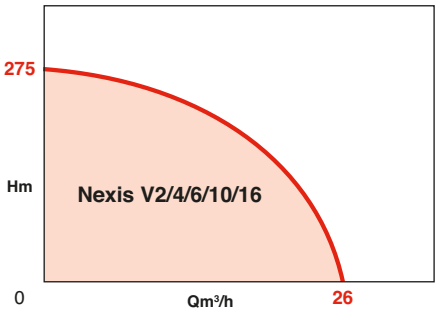

APPLICATIONS

Pumping of clean, non-muddy liquids in the housing, industrial and agricultural sectors:
- Supply - Boosting
- Watering - Irrigation
- High-pressure washing
- Water treatment (demineralisation, filtration, etc.)
- Fire protection
- Heating - Air conditioning

And for incorporation into all modular systems.

Pumped fluids

- **Standard range - 1.4307 stainless steel hydraulics (304L)**: clear and non-corrosive liquids (drinking water, glycol water, ...)
- **Corrosive water range - hydraulics**
- **1.4404 (316L)**: range: corrosive liquids (seawater, demineralised water, chlorinated water,...)

ADVANTAGES

HIGH EFFICENCY
- High-efficiency stainless steel laser-welded impellers and stages: 1.4307 (AISI 304L) or 1.4404 (AISI 316L).
- IEC IE2 standard motor.

INSTALLATION
- Easy installation: in-line ports.
- Adjustable lantern ring and terminal box (several positions on request).
- Lifting device for ease of handling.
- Filling funnel built into the pump.

MAINTENANCE
- Bearing (lantern ring) extends the life of the motor bearing and eliminates the setting and axial adjustment of the mobile elements.
- Easier maintenance:
- Standardised cartridge mechanical seals available for the entire range for temperatures of up to 120°C.
- Spacer design available on all models starting at 7.5 kW. Allows the installer or operator to replace the mechanical seal without removing the motor.



• **Optimised 2D/3D high-efficiency hydraulics**



• **Cartridge mechanical seal**
Standard seal



• **Filling funnel**

• **Nexis V16**
All-1.4307 (304L) stainless steel hydraulic assembly



Certified ACS

NEXIS V2/4/6/10/16

DESIGN

• Hydraulic part

- Centrifugal.
- Multi-stage, 1 to 33 stages.
- Vertical axis, in-line suction/delivery orifices in the lower part.
- Housing with oval flanges for PN 16 and round flanges for PN 25.
- Reliability of product ensured by one or more intermediate bearings.
- Standardised mechanical seal ensures leak-tightness of the shaft passage.
- Shaft protected from corrosion by a 316L stainless steel sleeve underneath the mechanical seal.
- Housing and hydraulics assembly assembled by stud bolts.

• Motors

- IE2. Standard ventilated.
- Flanges and shaft end conform to IEC standard.
- Connected to pump by coupling with safety guards.

Rotation speed:	2950 rpm	
4kW 3~Winding:	230-400 V :	T
above three-phase :	400 V :	T4
Frequency :	50 Hz (option 60 Hz)	
Insulation class:	155° C (Classe F)	
Protection class:	IP 55	

Key : **2-pole motor** Ⓜ

BASIC CONSTRUCTION

Main parts	Material	Material
liquids	non-corrosive	corrosive
models	all	all
Suction-discharge casing	1.4301 stainless steel (AISI 304)	1.4404 stainless steel(AISI 316L)
Upper motor lantern ring	ENGJL 250 cast iron	ENGJL 250 cast iron
Impellers	1.4307 stainless steel (AISI 304L)	1.4404 stainless steel (AISI 316L)
Cells (stage housing)	1.4307 stainless steel (AISI 304L)	1.4404 stainless steel (AISI 316L)
Ext. pipe sleeve	1.4301 stainless steel (AISI 304)	1.4404 stainless steel (AISI 316L)
Pump shaft	1.4307 stainless steel (AISI 304L)	1.4404 stainless steel (AISI 316L)
Intermediate bearing	Tungsten carbide	Tungsten carbide
Mechanical seal	Si carbide/Carbon* or Tungsten carbide/ Carbon	Si carbide/Carbon* or Tungsten carbide/ Carbon
O-rings	EPDM (120°)**	FKM (Viton 90°)**
Plugs	1.4301 stainless steel (AISI 304)	1.4404 stainless steel(AISI 316L)

NB :
*** Option :** Si carbide/ Si carbide seal.
**** Option :** FKM (Viton 90°C).
***** Option :** certain variants are made of 1.4462 stainless steel

CONSTRUCTION OF NEXIS V

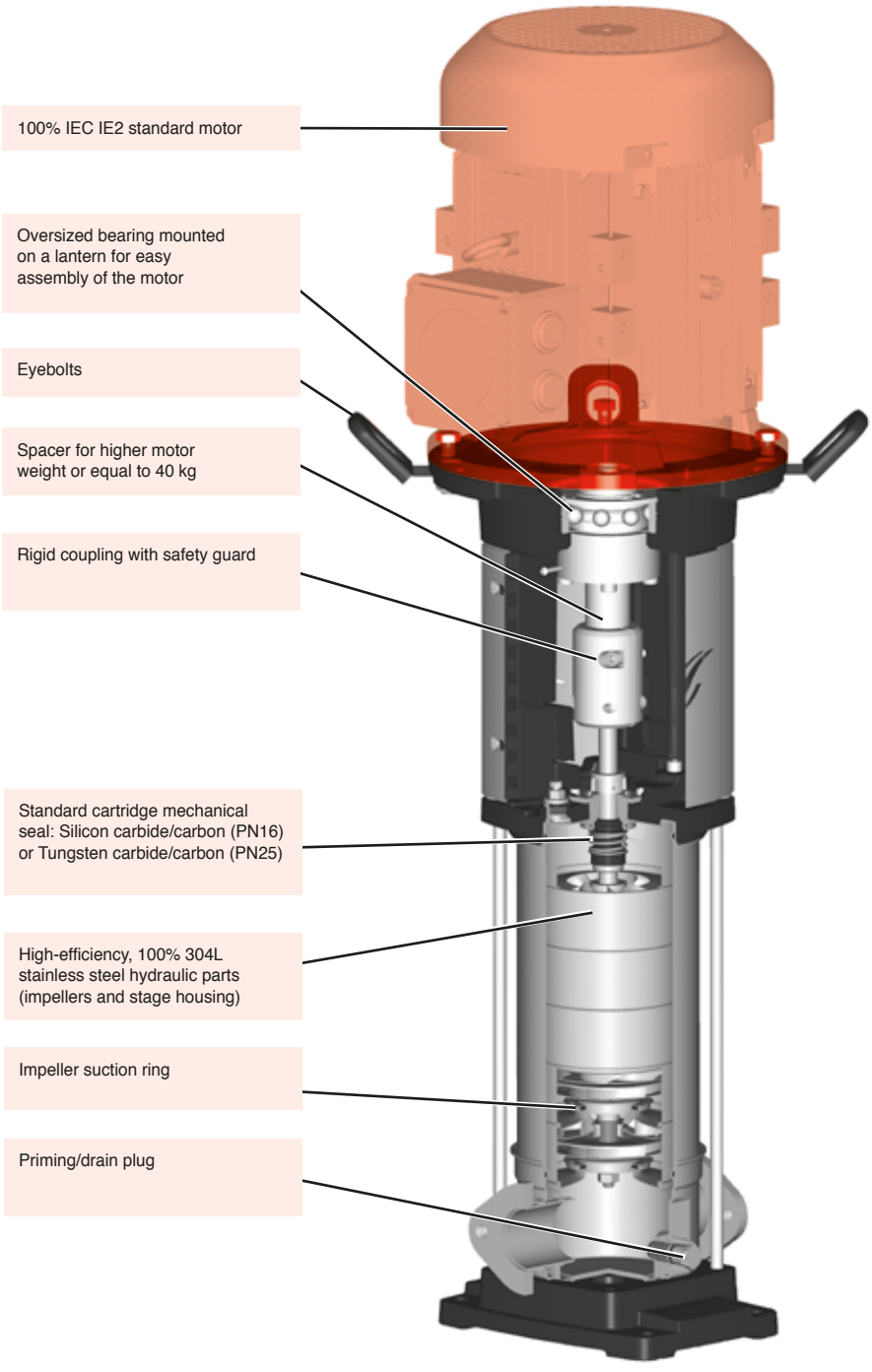

NB: The entire range of Nexis pumps is equipped with a cartridge mechanical seal. A simple mechanical seal option is also available for pumps 2/4/6/10/16.

IDENTIFICATION

Nexis V1602-OSE/KS/400-50+9/FF240/XXXX/B

Pump family

Nominal flowrate in m3/h (at 50 Hz / 2 poles)

Number of impellers

O = PN16 oval flanges
F = PN25 round flanges
T=PN40 round flanges (for 30 Bar)

S = 1.4301 (AISI 304) stainless steel pump casing 1.4301 (AISI 304) + 304L stainless steel hydraulics
X = 1.4404 (AISI 316L) tainless steel pump casing + 316L stainless steel hydraulics
G = EN GJL-250 cast iron pump housing + 304L stainless steel hydraulics

E = O-rings: EPDM
V = O-rings: FKM (VITON)

nothing = no option
K = cartridge mechanical seal
S = «System» orientation (booster pump)

Motor voltage (in V)

Motor frequency
50 hz / 60 hz

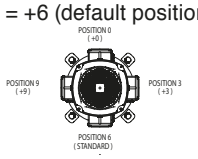

Terminal box position
nothing = +6 (default position)

FF240: Lantern ring size option
Nothing = standard lantern ring

Variant
«Nothing» = no option
EC = collective packaging
XXX = OEM customisation

Version index

SERIES CONFIGURATION

SERIES	max. operating pressure	moteur 50 Hz	suction/delivery flanges	number of stages
		2 pole		
Nexis V2	16 bar	•	oval G1"	2 to 20
	25 / 30 bar	•	round DN 25	2 to 39
Nexis V4	16 bar	•	oval G1"	2 to 20
	25 / 30 bar	•	round DN 25	2 to 31
Nexis V6	16 bar	•	oval G1"1/4	1 to 16
	25 / 30 bar	•	round DN 32	1 to 33
Nexis V10	16 bar	•	oval G1"1/2	1 to 15
	25 / 30 bar	•	round DN 40	1 to 23
Nexis V16	16 bar	•	oval G2	1 to 11
	25 / 30 bar	•	round DN 50	1 to 21

NEXIS V2/4/6/10/16

SECTIONAL DIAGRAM - NEXIS V2/4/6

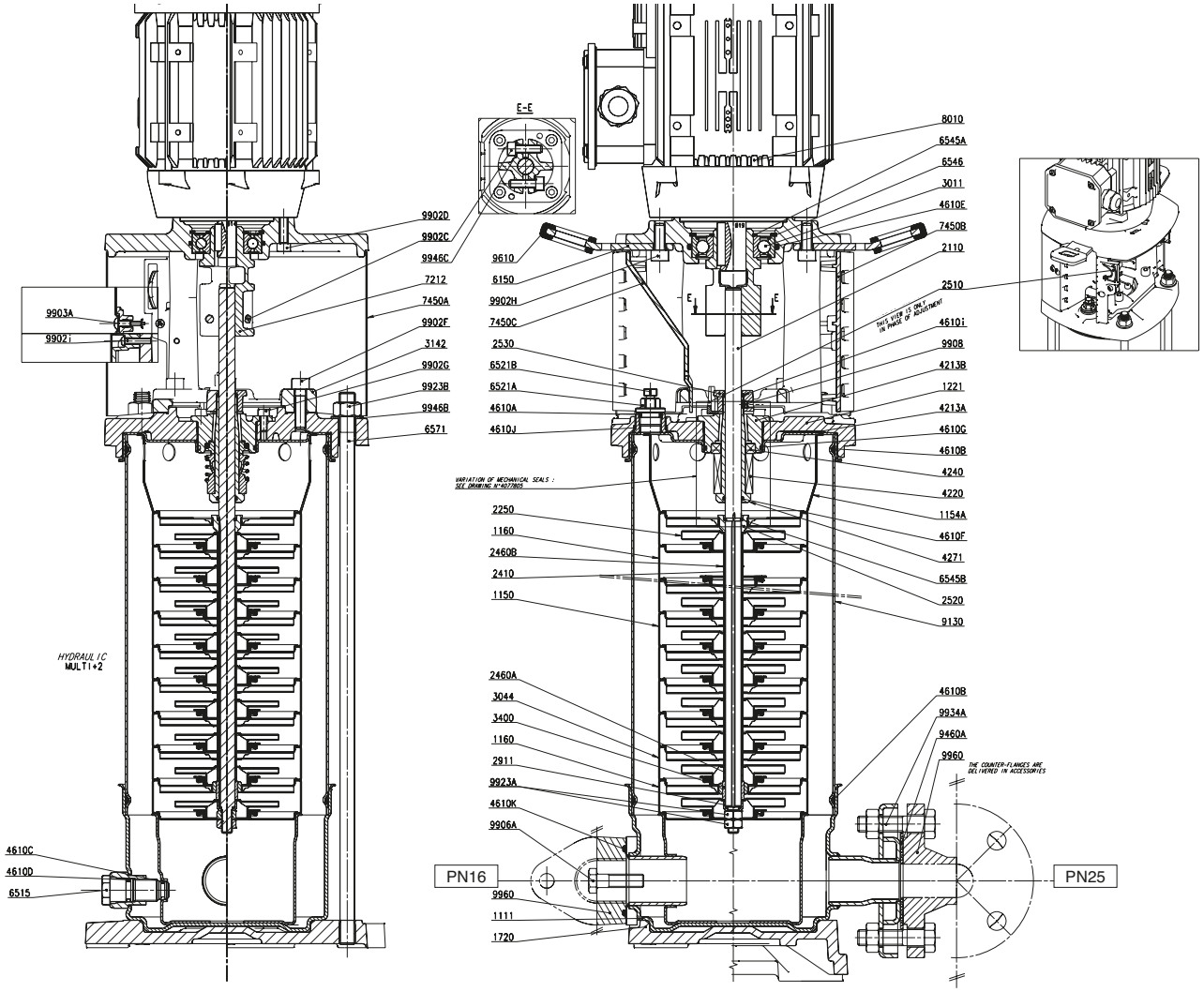

Key

1111	Pump housing
1150	Stage housing with interstage crossover
1154	Centring device without interstage crossover
1160	Stage housing without interstage crossover
1170	Hydraulic mount
1221	Upper shroud
1720	Sole plate
2110	Pump shaft
• 2250a	Long impeller
• 2250b	Short impeller
2410	Hub
2510	Mechanical seal adjusting yoke
2520	Support ring
2530	Drive collar
2911	Lower shaft end washer
3011	Lantern ring ball bearing
3044	Stage housing with intermediate bearing and interstage crossover
3142	Lantern ring
• 3400	Shaft sleeve
• 4220+4240	Standard mechanical seal
4271	Sleeve underneath seal
• 4610a	Bleeder plug gasket
• 4610b	O-ring for pipe sleeve
• 4610c	Drain and priming plug gasket
• 4610d	Drain and priming plug gasket
• 4610e	Bearing gasket
4610f	O-ring for sleeve underneath seal
4610g	O-ring for seal disc pad holder
4610h	O-ring for gasket surface
6150	Handling plate
6515	Drain and priming plug
6521	Filler - bleeder plug
6545a	Shaft circlip
6545b	1/2 snap ring
6546	Circlip
6548	Shaft snap ring
6571	Assembly stud bolt
7212	Coupling
7450a	Coupling guard plate
7450b	Plastic mount
7450c	Upper protective cover
• 8010	Flanged motor
9130	External sealing pipe sleeve
9460a	Flat backflange gasket
9610	Lifting ring protector
9660a	Screw-on gasket surface
9660b	Mobile flange
9900	Sole plate/housing attachment screw
9902a	Upper shaft end screw
9902c	Coupling screw
9902d	Motor attachment screw
9902f	Lantern ring/shroud attachment screw
9902g	Cartridge attachment screw
9902i	Plastic mount screw
9903	Protective screw
9908	Collar attachment screw
9923a	Lower shaft end nut
9923b	Assembly stud bolt nut
9923c	Motor attachment screw
9934a	Backflange bolt
9946a	Flat washer
9946b	Contact ring
9946c	Narrow contact ring

• Recommended spare parts

* Identical construction according to models (variable dimensions)

SECTIONAL DIAGRAM - NEXIS V10

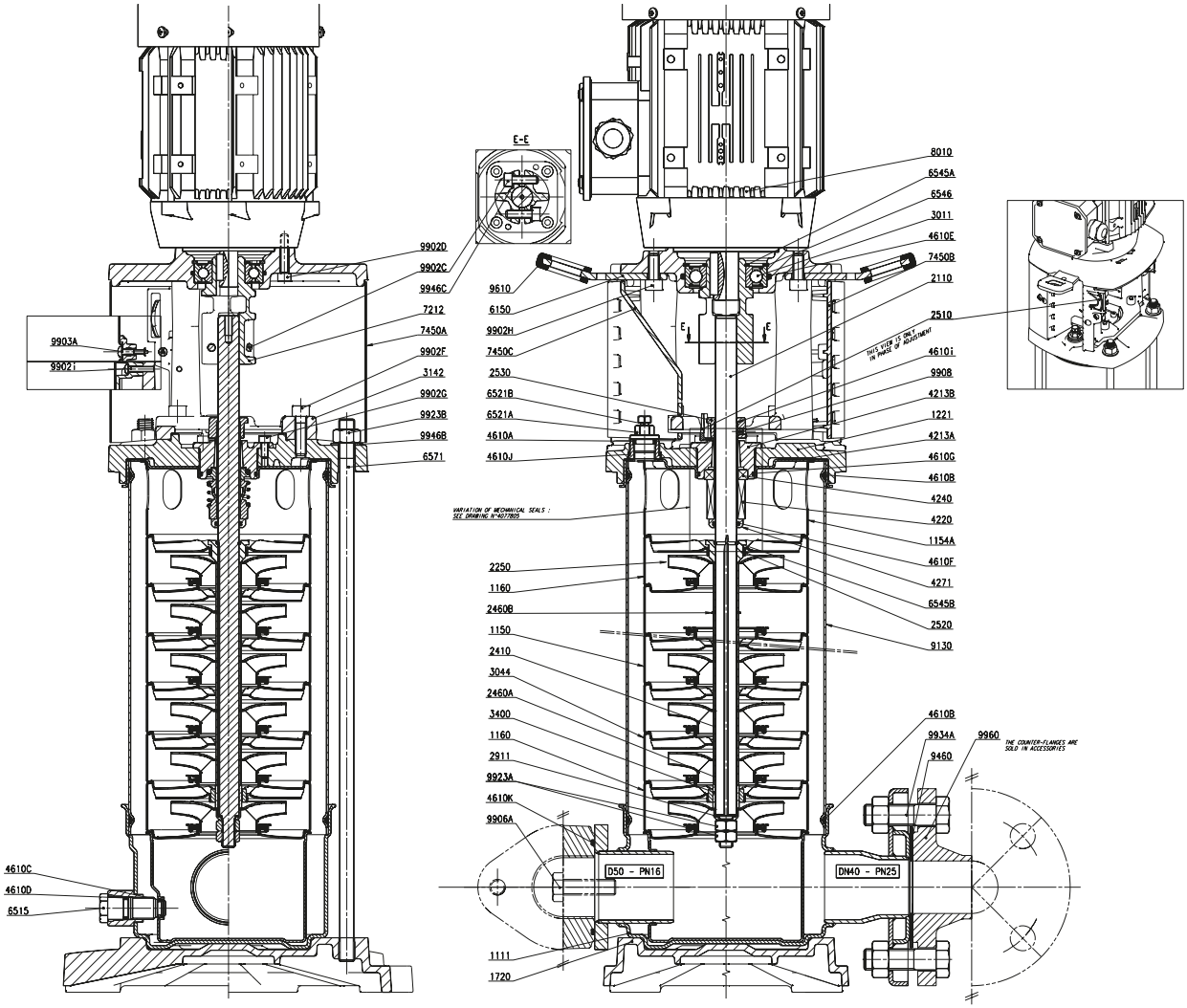

Key

1111	Pump housing
1150	Stage housing with interstage crossover
1154	Centring device without interstage crossover
1160	Stage housing without interstage crossover
1170	Hydraulic mount
1221	Upper shroud
1720	Sole plate
2110	Pump shaft
• 2250a	Long impeller
• 2250b	Short impeller
2410	Hub
2510	Mechanical seal adjusting yoke
2520	Support ring
2530	Drive collar
2911	Lower shaft end washer
3011	Lantern ring ball bearing
3044	Stage housing with intermediate bearing and interstage crossover
3142	Lantern ring
• 3400	Shaft sleeve
• 4220+4240	Standard mechanical seal
4271	Sleeve underneath seal
• 4610a	Bleeder plug gasket
• 4610b	O-ring for pipe sleeve
• 4610c	Drain and priming plug gasket
• 4610d	Drain and priming plug gasket
• 4610e	Bearing gasket
4610f	O-ring for sleeve underneath seal
4610g	O-ring for seal disc pad holder
4610h	O-ring for gasket surface
6150	Handling plate
6515	Drain and priming plug
6521	Filler - bleeder plug
6545a	Shaft circlip
6545b	1/2 snap ring
6546	Circlip
6548	Shaft snap ring
6571	Assembly stud bolt
7212	Coupling
7450a	Coupling guard plate
7450b	Plastic mount
7450c	Upper protective cover
• 8010	Flanged motor
9130	External sealing pipe sleeve
9460a	Flat backflange gasket
9610	Lifting ring protector
9660a	Screw-on gasket surface
9660b	Mobile flange
9900	Sole plate/housing attachment screw
9902a	Upper shaft end screw
9902c	Coupling screw
9902d	Motor attachment screw
9902f	Lantern ring/shroud attachment screw
9902g	Cartridge attachment screw
9902i	Plastic mount screw
9903	Protective screw
9908	Collar attachment screw
9923a	Lower shaft end nut
9923b	Assembly stud bolt nut
9923c	Motor attachment screw
9934a	Backflange bolt
9946a	Flat washer
9946b	Contact ring
9946c	Narrow contact ring

• Recommended spare parts

NEXIS V2/4/6/10/16

SECTIONAL DIAGRAM - NEXIS V16

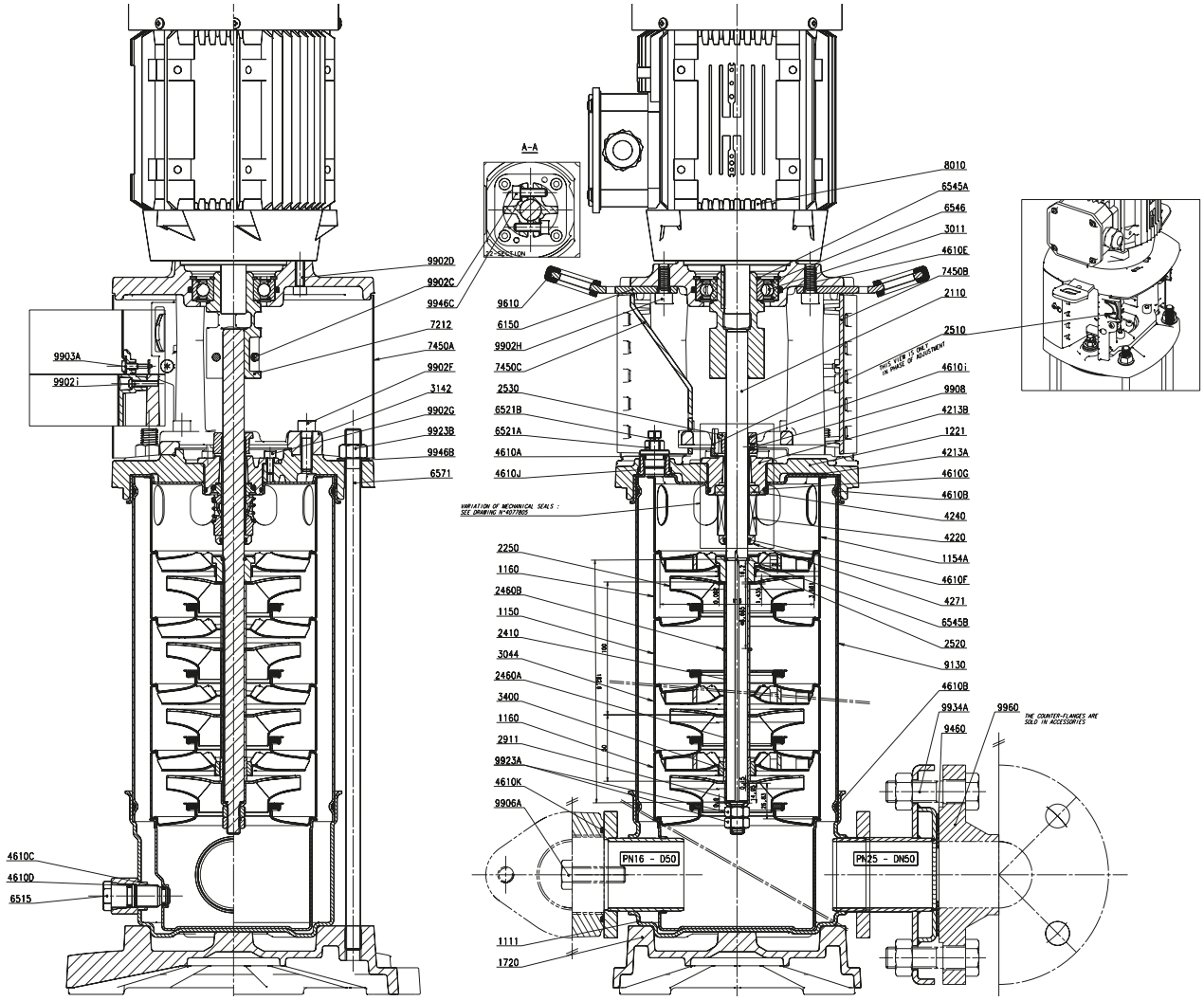

Key

1111	Pump housing
1150	Stage housing with interstage crossover
1154	Centring device without interstage crossover
1160	Stage housing without interstage crossover
1170	Hydraulic mount
1221	Upper shroud
1720	Sole plate
2110	Pump shaft
• 2250a	Long impeller
• 2250b	Short impeller
2410	Hub
2510	Mechanical seal adjusting yoke
2520	Support ring
2530	Drive collar
2911	Lower shaft end washer
3011	Lantern ring ball bearing
3044	Stage housing with intermediate bearing and interstage crossover
3142	Lantern ring
• 3400	Shaft sleeve
• 4220+4240	Standard mechanical seal
4271	Sleeve underneath seal
• 4610a	Bleeder plug gasket
• 4610b	O-ring for pipe sleeve
• 4610c	Drain and priming plug gasket
• 4610d	Drain and priming plug gasket
• 4610e	Bearing gasket
4610f	O-ring for sleeve underneath seal
4610g	O-ring for seal disc pad holder
4610h	O-ring for gasket surface
6150	Handling plate
6515	Drain and priming plug
6521	Filler - bleeder plug
6545a	Shaft circlip
6545b	1/2 snap ring
6546	Circlip
6548	Shaft snap ring
6571	Assembly stud bolt
7212	Coupling
7450a	Coupling guard plate
7450b	Plastic mount
7450c	Upper protective cover
• 8010	Flanged motor
9130	External sealing pipe sleeve
9460a	Flat backflange gasket
9610	Lifting ring protector
9660a	Screw-on gasket surface
9660b	Mobile flange
9900	Sole plate/housing attachment screw
9902a	Upper shaft end screw
9902c	Coupling screw
9902d	Motor attachment screw
9902f	Lantern ring/shroud attachment screw
9902g	Cartridge attachment screw
9902i	Plastic mount screw
9903	Protective screw
9908	Collar attachment screw
9923a	Lower shaft end nut
9923b	Assembly stud bolt nut
9923c	Motor attachment screw
9934a	Backflange bolt
9946a	Flat washer
9946b	Contact ring
9946c	Narrow contact ring

• Recommended spare parts

SECTIONAL DIAGRAM - LANTERN RING WITH SPACER AND CARTRIDGE

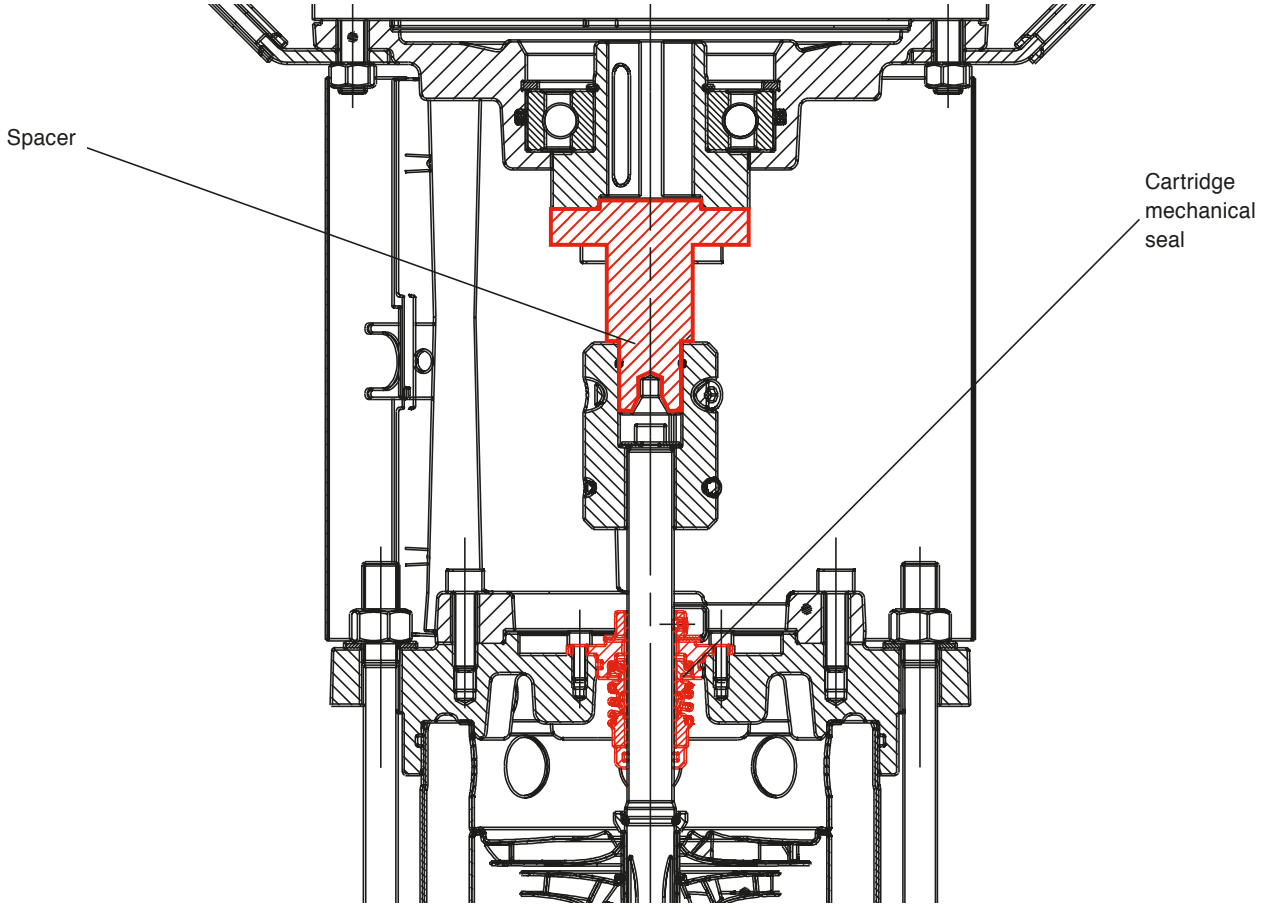

- **«Spacer» function**
  For motors with power of 7.5 kW or above, Nexis pumps are equipped with a removable part mounted between the motor shaft, the coupling and the hydraulic shaft. This part, called a «spacer», ensures that there is sufficient room to remove the mechanical seal without having to remove the motor.

- **Cartridge mechanical seal**
  In addition, the mechanical seals are built into a compact and robust cartridge system which allows for quick, easy and tool-free maintenance .

- **Economy version available with cartridge-free mechanical seal for 304L stainless steel and 50 Hz pumps. Standard offering up to 5.5 kW.**

- **Product plus points**
  The combination of a spacer and cartridge mechanical seal divides maintenance time by three and separates maintenance from any intervention on the hydraulic part.

NEXIS V2/4/6/10/16

SECTIONAL DIAGRAM - CARTRIDGE-FREE MECHANICAL SEAL VERSION

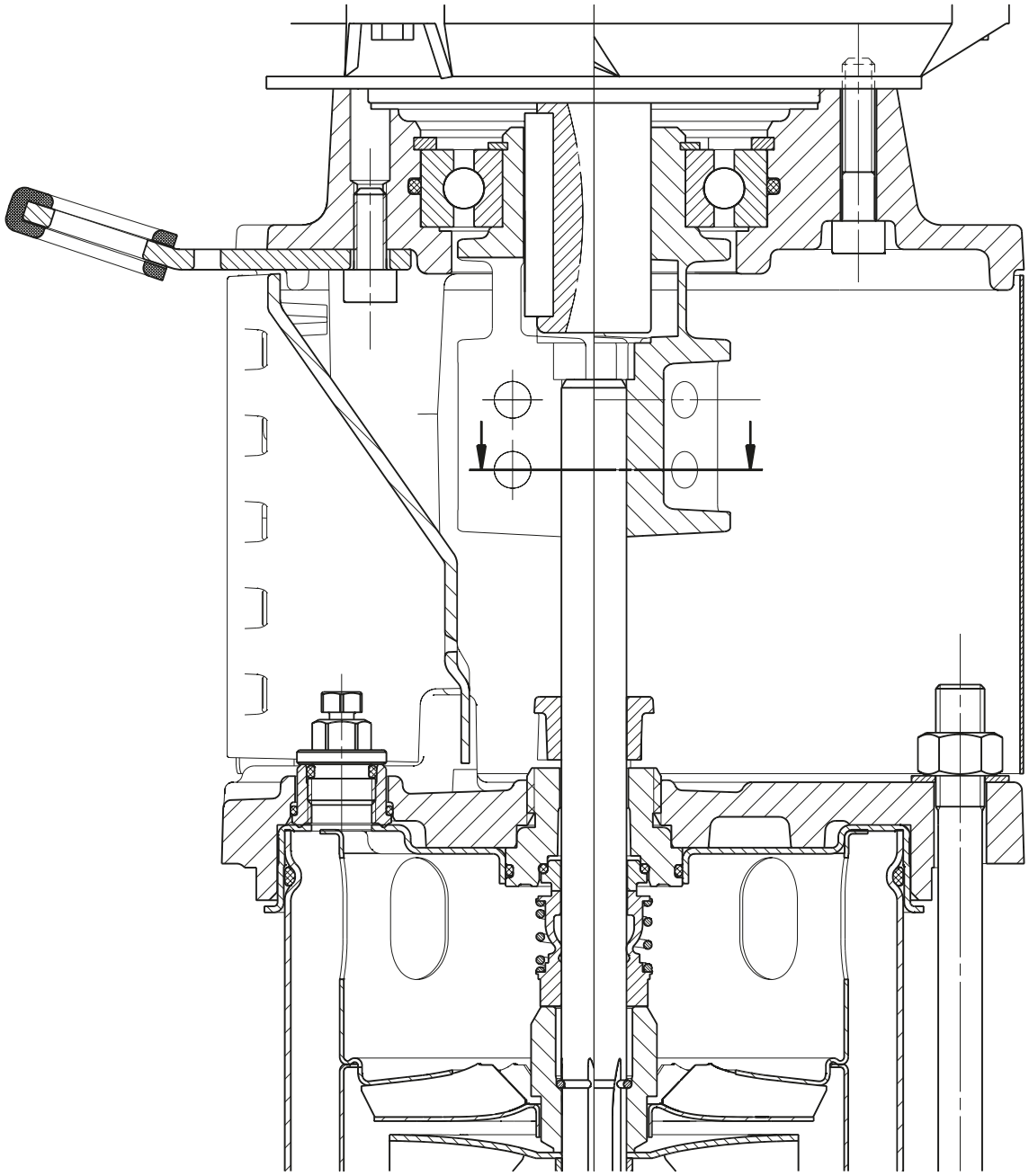

PRINCIPLE OF THE CARTRIDGE SEAL

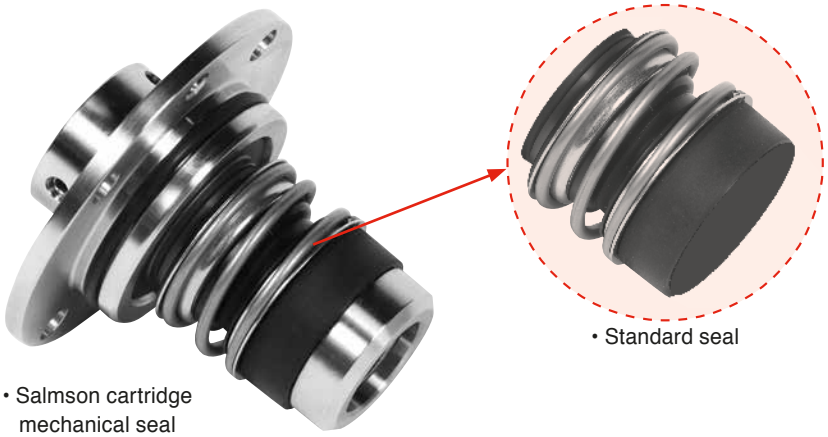

• Salmson cartridge mechanical seal

• Standard seal

Seal characteristics

As standard
- SiC/C or CW/C seal
- EPDM gasket

Optional
- SiC/SiC seal and/or
- Viton gasket

Advantages

- Removable cartridge for replacement of the worn part only.



- Easy extraction of the seal (housings provided for extraction screws)



- Adjustment shim placed in the lantern ring.



GENERAL PRESELECTION CHART

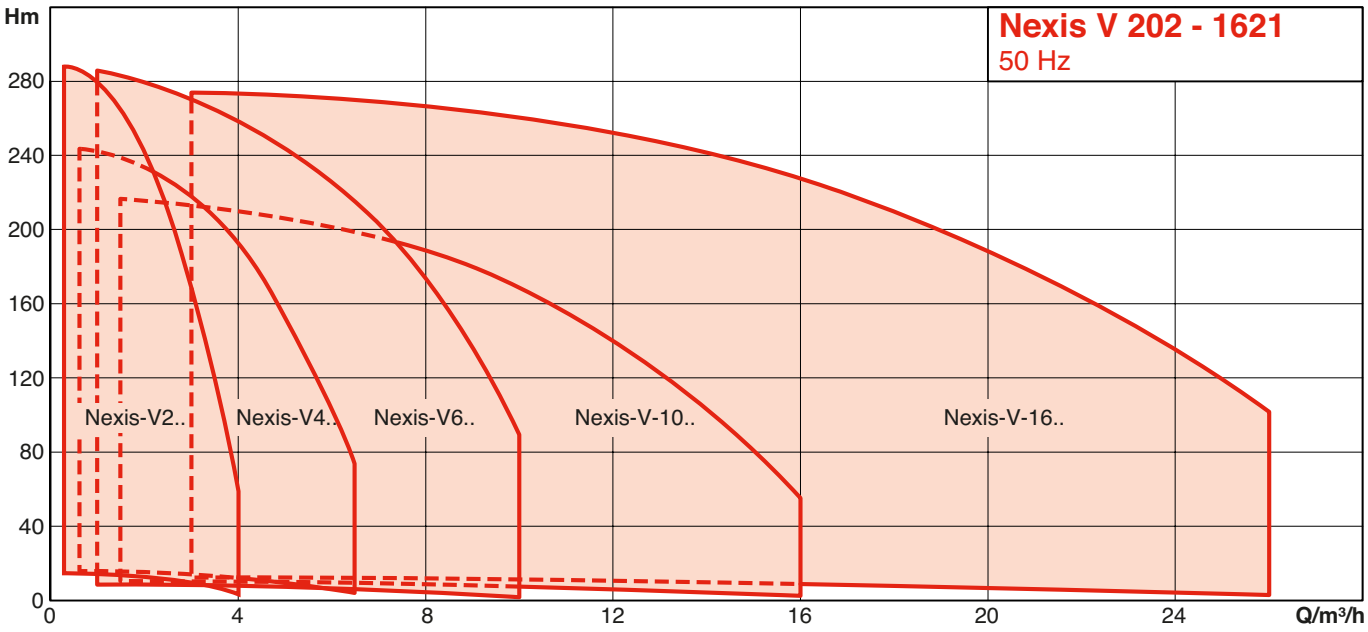

NEXIS V2/4/6/10/16

HYDRAULIC PERFORMANCE AT 2,900 RPM - NEXIS V2

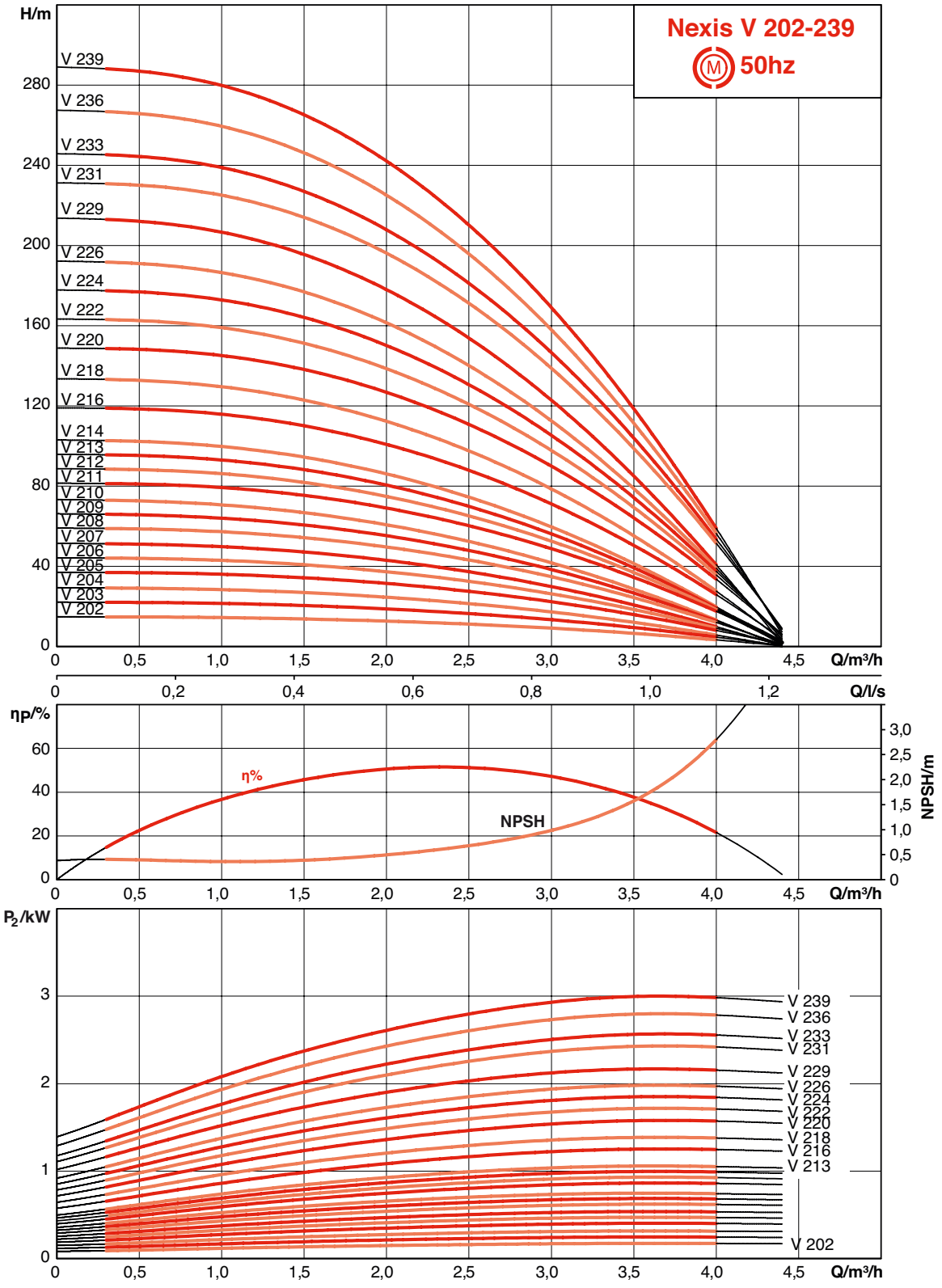

HYDRAULIC PERFORMANCE AT 2,900 RPM - NEXIS V4

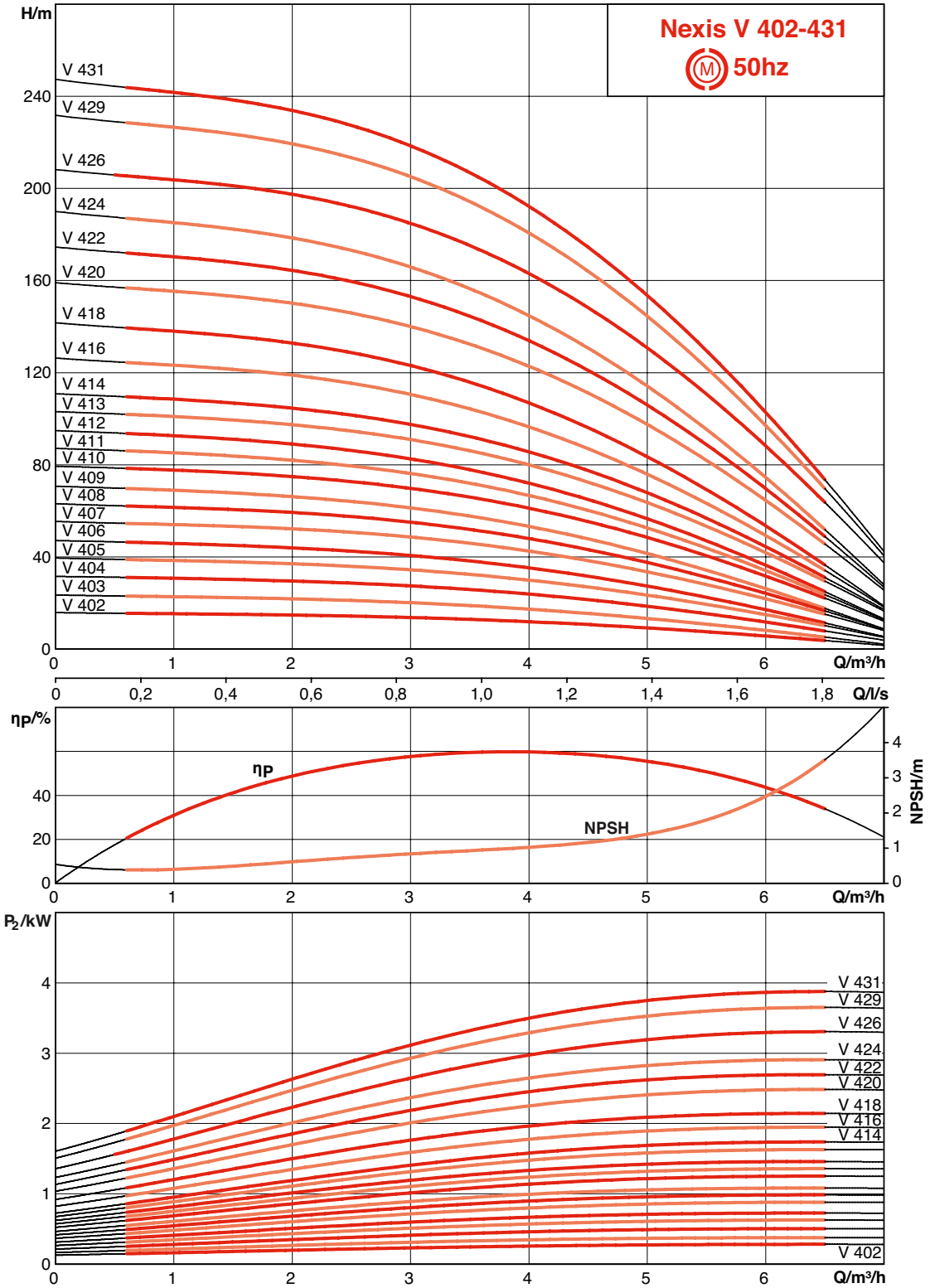

NEXIS V2/4/6/10/16

HYDRAULIC PERFORMANCE AT 2,900 RPM - NEXIS V6

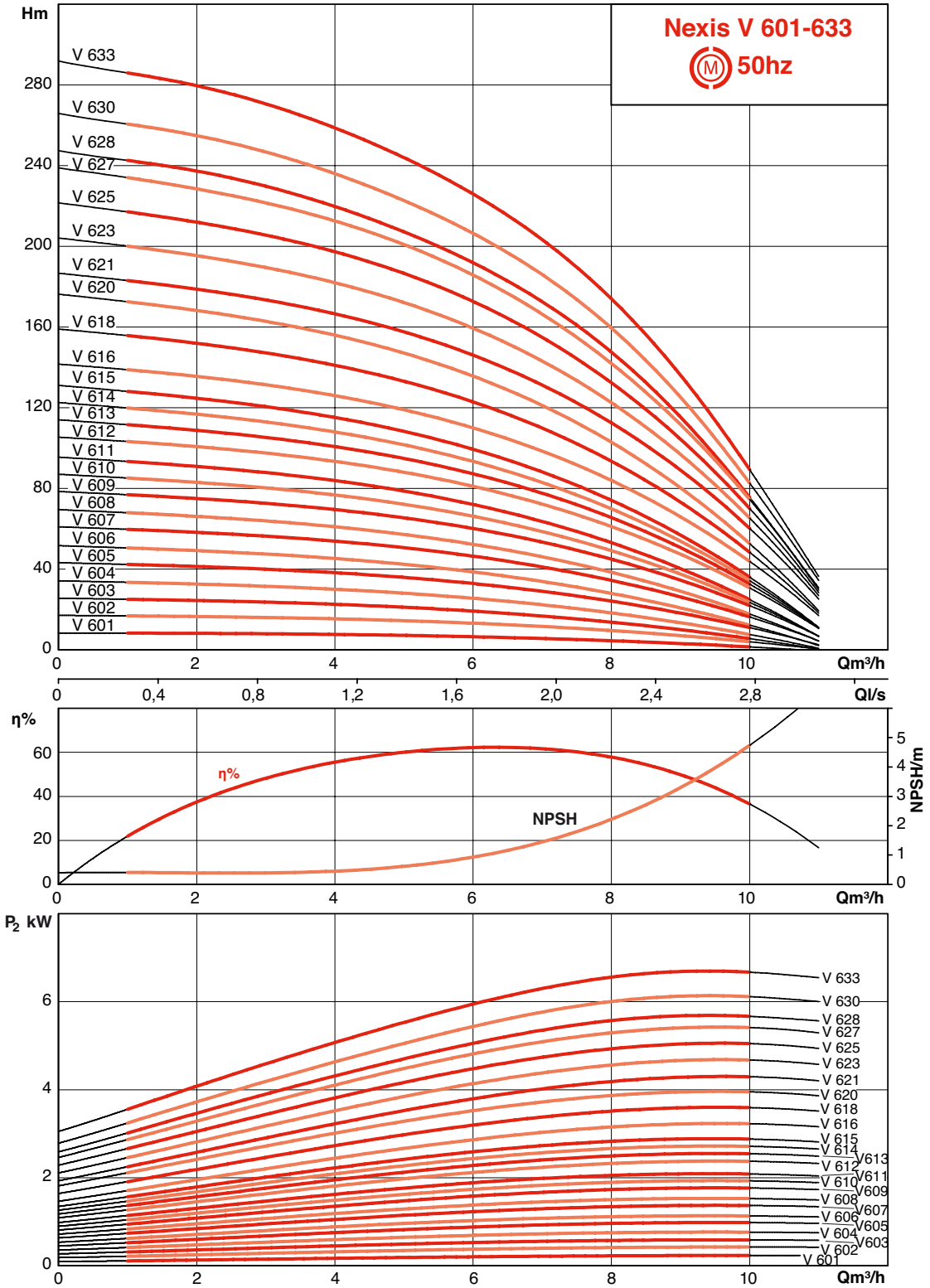

HYDRAULIC PERFORMANCE AT 2,900 RPM - NEXIS V10

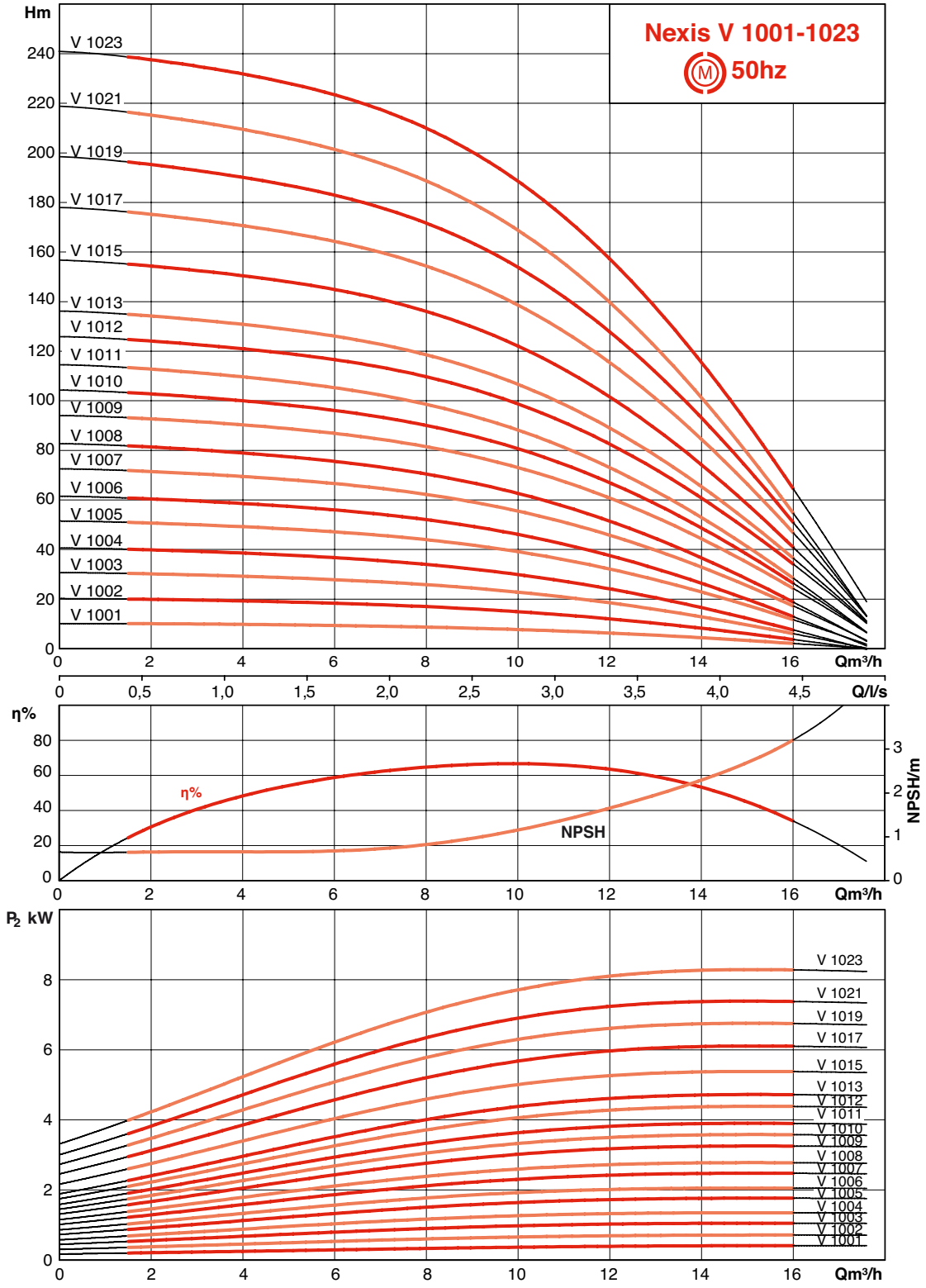

NEXIS V2/4/6/10/16

HYDRAULIC PERFORMANCE AT 2,900 RPM - NEXIS V16

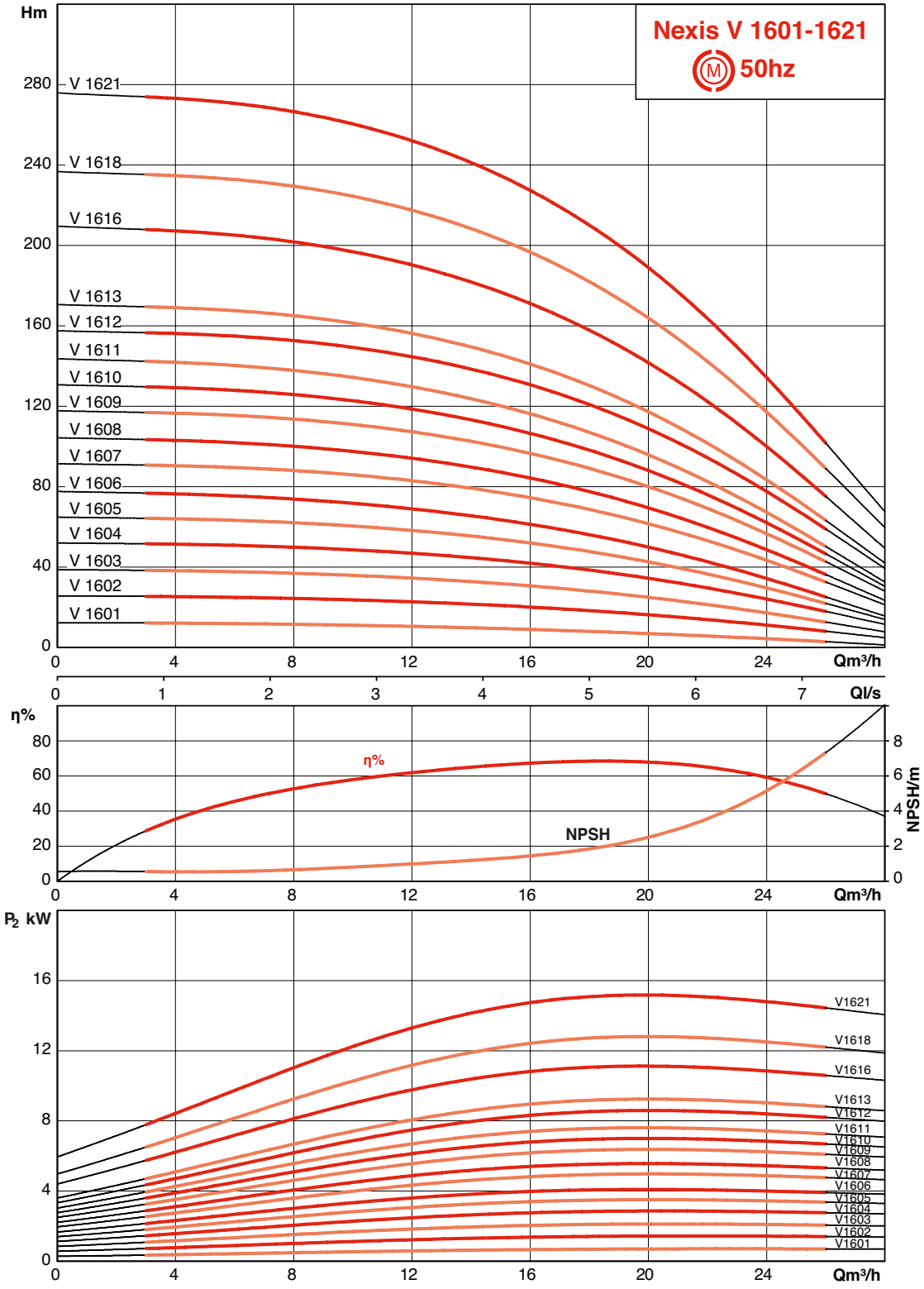

ELECTRICAL AND DIMENSIONAL SPECIFICATIONS NEXIS V2

• PN 16 - G1", PN 25 and PN 30- DN 25

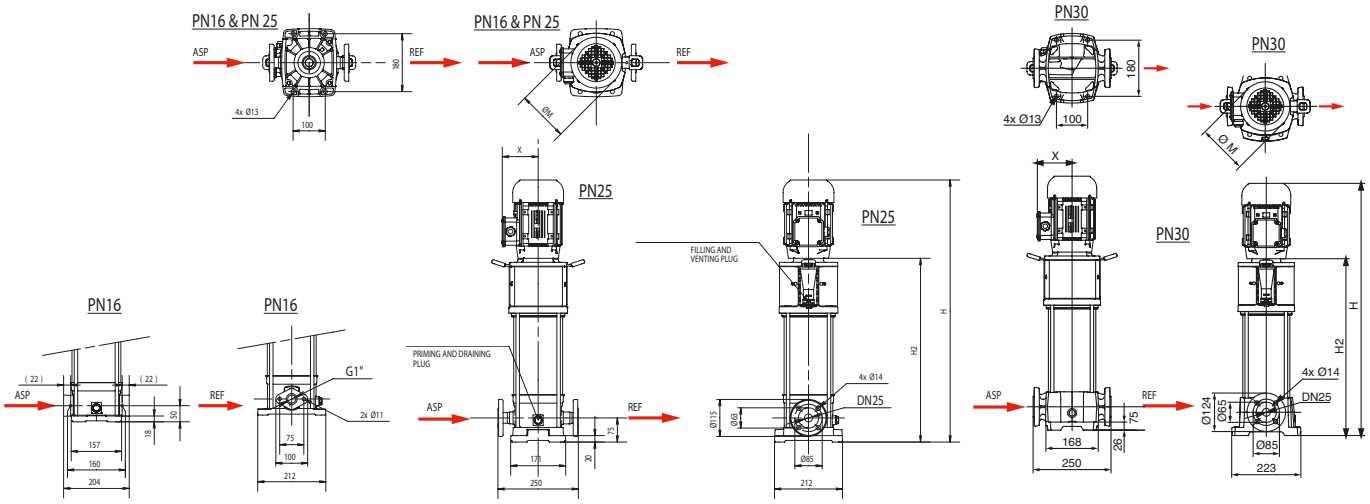

MODEL	P2	Efficiency according to load (%)			Max Current. (A)		PN flanges	DIMENSIONS H	H2	ØM	X	MASS (kg) Nett	Gross
	kW	4/4	3/4	2/4	3~ 230 V	3~ 400V	bar	mm	mm	mm	mm		
NEXIS V202-FXV/K/400-50	0.37	72.8	72.8	71	1.69	0,97	25	620	396	130	121	24	27
NEXIS V202-OSE/400-50	0.37	72.8	72.8	71	1.69	0,97	16	595	371	130	121	23	26
NEXIS V202-OSE/K/400-50	0.37	72.8	72.8	71	1.69	0,97	16	595	371	130	121	23	26
NEXIS V203-FXV/K/400-50	0.37	72.8	72.8	71	1.69	0,97	25	641	421	130	121	24	28
NEXIS V203-OSE/400-50	0.37	72.8	72.8	71	1.69	0,97	16	620	396	130	121	23	27
NEXIS V203-OSE/K/400-50	0.37	72.8	72.8	71	1.69	0,97	16	620	396	130	121	23	27
NEXIS V204-FXV/K/400-50	0.37	72.8	72.8	71	1.69	0,97	25	666	446	130	121	25	28
NEXIS V204-OSE/400-50	0.37	72.8	72.8	71	1.69	0,97	16	645	421	130	121	24	27
NEXIS V204-OSE/K/400-50	0.37	72.8	72.8	71	1.69	0,97	16	645	421	130	121	24	27
NEXIS V205-FXV/K/400-50	0.55	75.5	75	73	2.27	1,31	25	691	471	130	121	27	33
NEXIS V205-OSE/400-50	0.55	75.5	75	73	2.27	1,31	16	670	446	130	121	26	32
NEXIS V205-OSE/K/400-50	0.55	75.5	75	73	2.27	1,31	16	670	446	130	121	26	32
NEXIS V206-FXV/K/400-50	0.55	75.5	75	73	2.27	1,31	25	716	496	130	121	27	33
NEXIS V206-OSE/400-50	0.55	75.5	75	73	2.27	1,31	16	695	471	130	121	26	32
NEXIS V206-OSE/K/400-50	0.55	75.5	75	73	2.27	1,31	16	695	471	130	121	26	32
NEXIS V207-FXV/K/400-50	0.55	75.5	75	73	2.27	1,31	25	741	521	130	121	28	34
NEXIS V207-OSE/400-50	0.55	75.5	75	73	2.27	1,31	16	720	496	130	121	27	33
NEXIS V207-OSE/K/400-50	0.55	75.5	75	73	2.27	1,31	16	720	496	130	121	27	33
NEXIS V208-FXV/K/400-50	0.75	77.4	77.4	76	3.06	1,77	25	786	546	146	127	31	37
NEXIS V208-OSE/400-50	0.75	77.4	77.4	76	3.06	1,77	16	765	521	146	127	29	35
NEXIS V208-OSE/K/400-50	0.75	77.4	77.4	76	3.06	1,77	16	765	521	146	127	29	35
NEXIS V209-FSE/K/400-50	0.75	77.4	77.4	76	3.06	1,77	25	815	571	146	127	31	37
NEXIS V209-FXV/K/400-50	0.75	77.4	77.4	76	3.06	1,77	25	815	571	146	127	31	37
NEXIS V209-OSE/400-50	0.75	77.4	77.4	76	3.06	1,77	16	790	546	146	127	29	35
NEXIS V209-OSE/K/400-50	0.75	77.4	77.4	76	3.06	1,77	16	790	546	146	127	29	35
NEXIS V210-FSE/K/400-50	0.75	77.4	77.4	76	3.06	1,77	25	840	596	146	127	32	38
NEXIS V210-FXV/K/400-50	0.75	77.4	77.4	76	3.06	1,77	25	840	596	146	127	32	38
NEXIS V210-OSE/400-50	0.75	77.4	77.4	76	3.06	1,77	16	815	571	146	127	30	36
NEXIS V210-OSE/K/400-50	0.75	77.4	77.4	76	3.06	1,77	16	815	571	146	127	30	36
NEXIS V211-FSE/K/400-50	1.1	79.6	79.6	78	4.4	2,6	25	865	621	146	127	35	41
NEXIS V211-FXV/K/400-50	1.1	79.6	79.6	78	4.4	2,6	25	865	621	146	127	34	40
NEXIS V211-OSE/400-50	1.1	79.6	79.6	78	4.4	2,6	16	840	596	146	127	32	38
NEXIS V211-OSE/K/400-50	1.1	79.6	79.6	78	4.4	2,6	16	840	596	146	127	32	38
NEXIS V212-FSE/K/400-50	1.1	79.6	79.6	78	4.4	2,6	25	890	646	146	127	34	43
NEXIS V212-FXV/K/400-50	1.1	79.6	79.6	78	4.4	2,6	25	890	646	146	127	34	43
NEXIS V212-OSE/400-50	1.1	79.6	79.6	78	4.4	2,6	16	865	621	146	127	32	41
NEXIS V212-OSE/K/400-50	1.1	79.6	79.6	78	4.4	2,6	16	865	621	146	127	32	41

NEXIS V2/4/6/10/16

ELECTRICAL AND DIMENSIONAL SPECIFICATIONS NEXIS V2

• PN 16 - G1", PN 25 and PN 30- DN 25

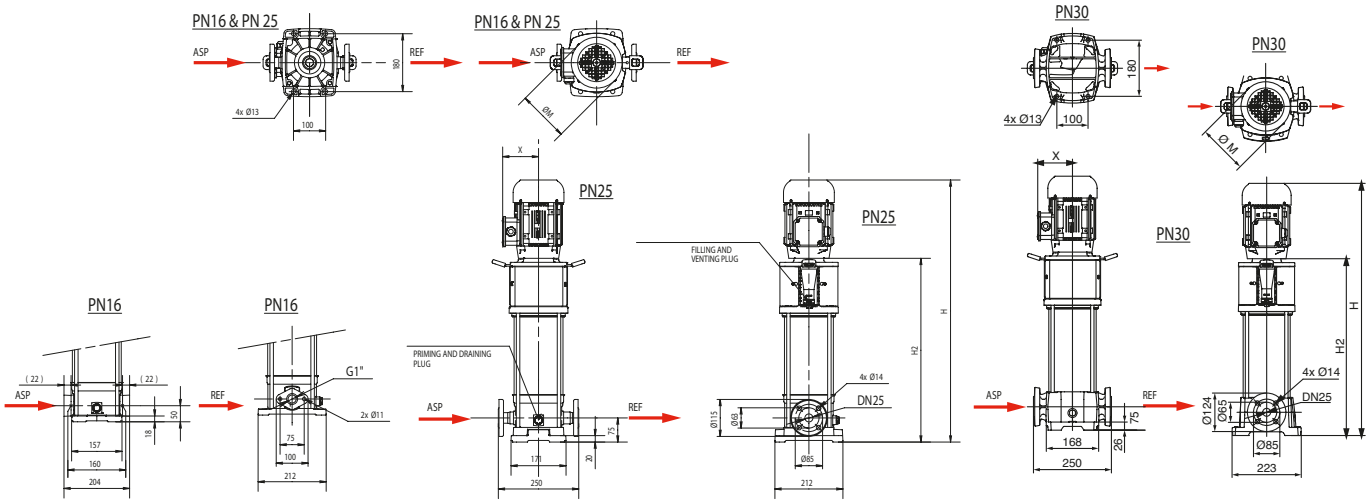

MODEL	P2	Efficiency according to load (%)			Max Current. (A)		PN flanges	H	DIMENSIONS H2	ØM	X	MASS (kg) Nett	Gross
	kW	4/4	3/4	2/4	3~ 230 V	3~ 400V	bar	mm	mm	mm	mm		
NEXIS V213-FSE/K/400-50	1.1	79.6	79.6	78	4.4	2,6	25	940	696	146	127	35	44
NEXIS V213-FXV/K/400-50	1.1	79.6	79.6	78	4.4	2,6	25	940	696	146	127	35	44
NEXIS V213-OSE/400-50	1.1	79.6	79.6	78	4.4	2,6	16	915	671	146	127	33	42
NEXIS V213-OSE/K/400-50	1.1	79.6	79.6	78	4.4	2,6	16	915	671	146	127	33	42
NEXIS V214-FSE/K/400-50	1.1	79.6	79.6	78	4.4	2,6	25	940	696	146	127	36	44
NEXIS V214-FXV/K/400-50	1.1	79.6	79.6	78	4.4	2,6	25	940	696	146	127	36	44
NEXIS V214-OSE/400-50	1.1	79.6	79.6	78	4.4	2,6	16	915	671	146	127	33	42
NEXIS V214-OSE/K/400-50	1.1	79.6	79.6	78	4.4	2,6	16	915	671	146	127	33	42
NEXIS V216-FSE/K/400-50	1.5	81.3	81.3	80	5.7	3,3	25	1035	756	184	149	41	49
NEXIS V216-FXV/K/400-50	1.5	81.3	81.3	80	5.7	3,3	25	1035	756	184	149	41	49
NEXIS V216-OSE/400-50	1.5	81.3	81.3	80	5.7	3,3	16	1010	731	184	149	39	47
NEXIS V216-OSE/K/400-50	1.5	81.3	81.3	80	5.7	3,3	16	1010	731	184	149	39	47
NEXIS V218-FSE/K/400-50	1.5	81.3	81.3	80	5.7	3,3	25	1085	806	184	149	42	50
NEXIS V218-FXV/K/400-50	1.5	81.3	81.3	80	5.7	3,3	25	1085	806	184	149	42	50
NEXIS V218-OSE/400-50	1.5	81.3	81.3	80	5.7	3,3	16	1060	781	184	149	40	48
NEXIS V218-OSE/K/400-50	1.5	81.3	81.3	80	5.7	3,3	16	1060	781	184	149	40	48
NEXIS V220-FSE/K/400-50	2.2	83.2	83.2	82	8	4,6	25	1135	856	184	149	45	67
NEXIS V220-FXV/K/400-50	2.2	83.2	83.2	82	8	4,6	25	1135	856	184	149	45	67
NEXIS V220-OSE/400-50	2.2	83.2	83.2	82	8	4,6	16	1110	831	184	149	43	65
NEXIS V220-OSE/K/400-50	2.2	83.2	83.2	82	8	4,6	16	1110	831	184	149	43	65
NEXIS V222-FSE/K/400-50	2.2	83.2	83.2	82	8	4,6	25	1235	956	184	149	47	69
NEXIS V222-FXV/K/400-50	2.2	83.2	83.2	82	8	4,6	25	1235	956	184	149	47	69
NEXIS V224-FSE/K/400-50	2.2	83.2	83.2	82	8	4,6	25	1235	956	184	149	48	70
NEXIS V224-FXV/K/400-50	2.2	83.2	83.2	82	8	4,6	25	1235	956	184	149	48	70
NEXIS V226-FSE/K/400-50	2.2	83.2	83.2	82	8	4,6	25	1310	1031	184	149	49	71
NEXIS V226-FXV/K/400-50	2.2	83.2	83.2	82	8	4,6	25	1310	1031	184	149	49	71
NEXIS V229-FSE/K/400-50	2.2	83.2	83.2	82	8	4,6	25	1385	1106	184	149	51	73
NEXIS V229-FXV/K/400-50	2.2	83.2	83.2	82	8	4,6	25	1385	1106	184	149	51	73
NEXIS V229-TGE/K/400-50	3	84.6	85	82.5	11.6	6,7	30	1362	1083	194	170	62	84
NEXIS V231-FSE/K/400-50	3	84.6	85	82.5	11.6	6,7	25	1458	1141	194	170	59	81
NEXIS V231-FXV/K/400-50	3	84.6	85	82.5	11.6	6,7	25	1458	1141	194	170	59	81
NEXIS V231-TGE/K/400-50	3	84.6	85	82.5	11.6	6,7	30	1435	1118	194	170	63	85
NEXIS V233-FSE/K/400-50	3	84.6	85	82.5	11.6	6,7	25	1508	1191	194	170	60	110
NEXIS V233-FXV/K/400-50	3	84.6	85	82.5	11.6	6,7	25	1508	1191	194	170	60	110
NEXIS V233-TGE/K/400-50	3	84.6	85	82.5	11.6	6,7	30	1485	1168	194	170	64	86
NEXIS V236-TGE/K/400-50	3	84.6	85	82.5	11.6	6,7	30	1560	1243	194	170	66	116
NEXIS V239-TGE/K/400-50	3	84.6	85	82.5	11.6	6,7	30	1635	1318	194	170	67	117

ELECTRICAL AND DIMENSIONAL SPECIFICATIONS NEXIS V4

• PN 16 - G1" and PN 25 and PN 30 - DN 25

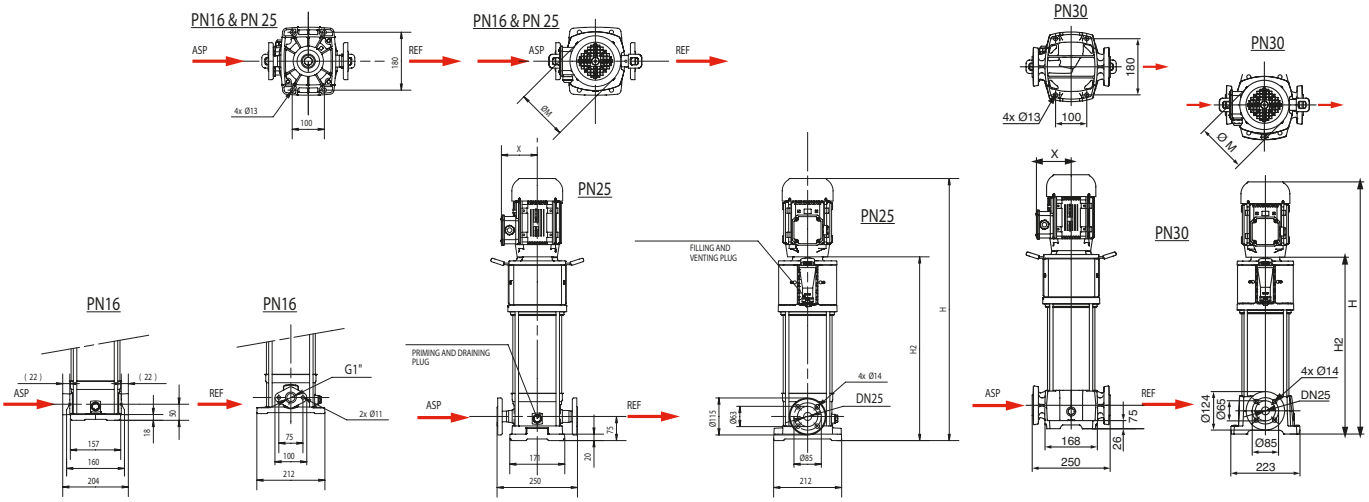

MODEL	P2	Efficiency according to load (%)			Max Current. (A)		PN flanges	DIMENSIONS H	H2	ØM	X	MASS (kg) Nett	Gross
	kW	4/4	3/4	2/4	3~ 230 V	3~ 400V	bar	mm	mm	mm	mm		
NEXIS V402-FXV/K/400-50	0.37	72.8	72.8	71	1.69	0,97	25	620	396	130	121	23	27
NEXIS V402-OSE/400-50	0.37	72.8	72.8	71	1.69	0,97	16	595	371	130	121	22	26
NEXIS V402-OSE/K/400-50	0.37	72.8	72.8	71	1.69	0,97	16	595	371	130	121	22	26
NEXIS V403-FXV/K/400-50	0.37	72.8	72.8	71	1.69	0,97	25	645	421	130	121	24	27
NEXIS V403-OSE/400-50	0.37	72.8	72.8	71	1.69	0,97	16	620	396	130	121	23	26
NEXIS V403-OSE/K/400-50	0.37	72.8	72.8	71	1.69	0,97	16	620	396	130	121	23	26
NEXIS V404-FXV/K/400-50	0.55	75.5	75	73	2.27	1,31	25	670	446	130	121	25	29
NEXIS V404-OSE/400-50	0.55	75.5	75	73	2.27	1,31	16	645	421	130	121	24	28
NEXIS V404-OSE/K/400-50	0.55	75.5	75	73	2.27	1,31	16	645	421	130	121	24	28
NEXIS V405-FXV/K/400-50	0.75	77.4	77.4	76	3.06	1,77	25	715	471	146	127	27	33
NEXIS V405-OSE/400-50	0.75	77.4	77.4	76	3.06	1,77	16	690	446	146	127	26	32
NEXIS V405-OSE/K/400-50	0.75	77.4	77.4	76	3.06	1,77	16	690	446	146	127	26	32
NEXIS V406-FXV/K/400-50	0.75	77.4	77.4	76	3.06	1,77	25	740	496	146	127	28	34
NEXIS V406-OSE/400-50	0.75	77.4	77.4	76	3.06	1,77	16	715	471	146	127	27	33
NEXIS V406-OSE/K/400-50	0.75	77.4	77.4	76	3.06	1,77	16	715	471	146	127	27	33
NEXIS V407-FXV/K/400-50	1.1	79.6	79.6	78	4.4	2,6	25	765	521	146	127	30	36
NEXIS V407-OSE/400-50	1.1	79.6	79.6	78	4.4	2,6	16	740	496	146	127	29	35
NEXIS V407-OSE/K/400-50	1.1	79.6	79.6	78	4.4	2,6	16	740	496	146	127	29	35
NEXIS V408-FSE/K/400-50	1.1	79.6	79.6	78	4.4	2,6	25	790	546	146	127	32	38
NEXIS V408-FXV/K/400-50	1.1	79.6	79.6	78	4.4	2,6	25	790	546	146	127	32	38
NEXIS V408-OSE/400-50	1.1	79.6	79.6	78	4.4	2,6	16	765	521	146	127	29	35
NEXIS V408-OSE/K/400-50	1.1	79.6	79.6	78	4.4	2,6	16	765	521	146	127	29	35
NEXIS V409-FSE/K/400-50	1.1	79.6	79.6	78	4.4	2,6	25	815	571	146	127	32	38
NEXIS V409-FXV/K/400-50	1.1	79.6	79.6	78	4.4	2,6	25	815	571	146	127	32	38
NEXIS V409-OSE/400-50	1.1	79.6	79.6	78	4.4	2,6	16	790	546	146	127	32	38
NEXIS V409-OSE/K/400-50	1.1	79.6	79.6	78	4.4	2,6	16	790	546	146	127	32	38
NEXIS V410-FSE/K/400-50	1.5	81.3	81.3	80	5.7	3,3	25	885	606	184	149	37	43
NEXIS V410-FXV/K/400-50	1.5	81.3	81.3	80	5.7	3,3	25	885	606	184	149	37	43
NEXIS V410-OSE/400-50	1.5	81.3	81.3	80	5.7	3,3	16	860	581	184	149	35	41
NEXIS V410-OSE/K/400-50	1.5	81.3	81.3	80	5.7	3,3	16	860	581	184	149	35	41
NEXIS V411-FSE/K/400-50	1.5	81.3	81.3	80	5.7	3,3	25	910	631	184	149	37	43
NEXIS V411-FXV/K/400-50	1.5	81.3	81.3	80	5.7	3,3	25	910	631	184	149	37	43
NEXIS V411-OSE/400-50	1.5	81.3	81.3	80	5.7	3,3	16	885	606	184	149	35	41
NEXIS V411-OSE/K/400-50	1.5	81.3	81.3	80	5.7	3,3	16	885	606	184	149	35	41
NEXIS V412-FSE/K/400-50	1.5	81.3	81.3	80	5.7	3,3	25	935	656	184	149	38	46
NEXIS V412-FXV/K/400-50	1.5	81.3	81.3	80	5.7	3,3	25	935	656	184	149	38	46
NEXIS V412-OSE/400-50	1.5	81.3	81.3	80	5.7	3,3	16	910	631	184	149	36	44
NEXIS V412-OSE/K/400-50	1.5	81.3	81.3	80	5.7	3,3	16	910	631	184	149	36	44
NEXIS V413-FSE/K/400-50	2.2	83.2	83.2	82	8	4,6	25	985	706	184	149	42	50
NEXIS V413-FXV/K/400-50	2.2	83.2	83.2	82	8	4,6	25	985	706	184	149	42	50
NEXIS V413-OSE/400-50	2.2	83.2	83.2	82	8	4,6	16	960	681	184	149	40	48

NEXIS V2/4/6/10/16

ELECTRICAL AND DIMENSIONAL SPECIFICATIONS NEXIS V4

• PN 16 - G1" and PN 25 and PN 30 - DN 25

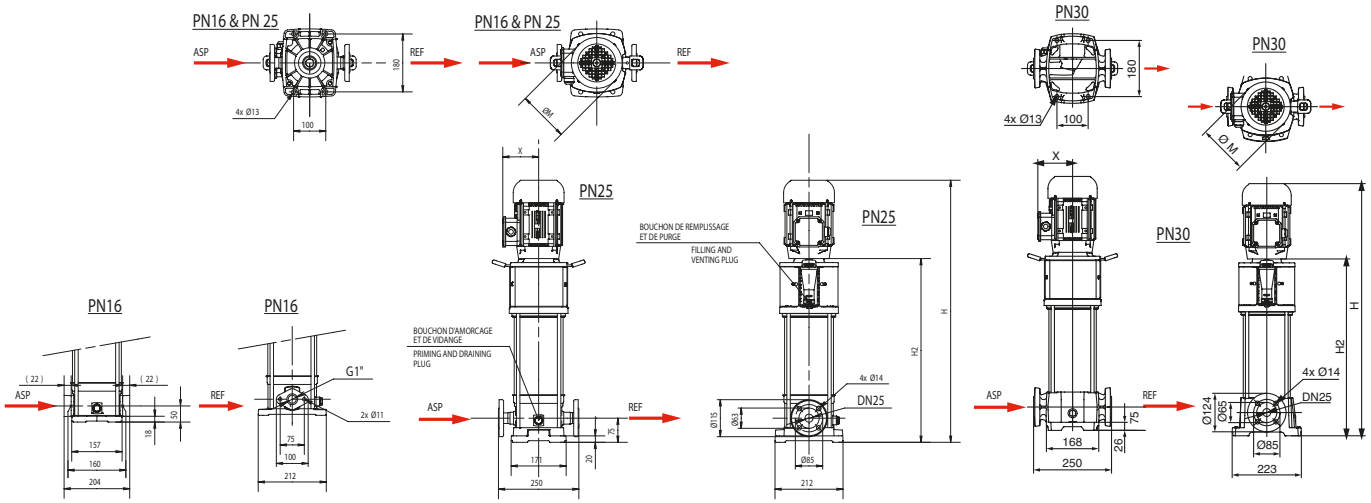

MODEL	P2	Efficiency according to load (%)			Max Current. (A)		PN flanges	DIMENSIONS H	H2	ØM	X	MASS (kg) Nett	Gross
	kW	4/4	3/4	2/4	3~ 230 V	3~ 400V	bar	mm	mm	mm	mm		
NEXIS V413-OSE/K/400-50	2.2	83.2	83.2	82	8	4,6	16	960	681	184	149	40	48
NEXIS V414-FSE/K/400-50	2.2	83.2	83.2	82	8	4,6	25	985	706	184	149	42	50
NEXIS V414-FXV/K/400-50	2.2	83.2	83.2	82	8	4,6	25	985	706	184	149	42	50
NEXIS V414-OSE/400-50	2.2	83.2	83.2	82	8	4,6	16	960	681	184	149	40	48
NEXIS V414-OSE/K/400-50	2.2	83.2	83.2	82	8	4,6	16	960	681	184	149	40	48
NEXIS V416-FSE/K/400-50	2.2	83.2	83.2	82	8	4,6	25	1035	756	184	149	43	51
NEXIS V416-FXV/K/400-50	2.2	83.2	83.2	82	8	4,6	25	1035	756	184	149	43	51
NEXIS V416-OSE/400-50	2.2	83.2	83.2	82	8	4,6	16	1010	731	184	149	41	49
NEXIS V416-OSE/K/400-50	2.2	83.2	83.2	82	8	4,6	16	1010	731	184	149	41	49
NEXIS V418-FSE/K/400-50	2.2	83.2	83.2	82	8	4,6	25	1085	806	184	149	44	52
NEXIS V418-FXV/K/400-50	2.2	83.2	83.2	82	8	4,6	25	1085	806	184	149	44	52
NEXIS V418-OSE/400-50	2.2	83.2	83.2	82	8	4,6	16	1060	781	184	149	42	50
NEXIS V418-OSE/K/400-50	2.2	83.2	83.2	82	8	4,6	16	1060	781	184	149	42	50
NEXIS V420-FSE/K/400-50	3	84.6	85	82.5	11.6	6,7	25	1183	866	194	170	52	74
NEXIS V420-FXV/K/400-50	3	84.6	85	82.5	11.6	6,7	25	1183	866	194	170	52	74
NEXIS V420-OSE/400-50	3	84.6	85	82.5	11.6	6,7	16	1158	841	194	170	50	72
NEXIS V420-OSE/K/400-50	3	84.6	85	82.5	11.6	6,7	16	1158	841	194	170	50	72
NEXIS V422-FSE/K/400-50	3	84.6	85	82.5	11.6	6,7	25	1283	966	194	170	53	75
NEXIS V422-FXV/K/400-50	3	84.6	85	82.5	11.6	6,7	25	1283	966	194	170	53	75
NEXIS V424-FSE/K/400-50	3	84.6	85	82.5	11.6	6,7	25	1283	966	194	170	54	76
NEXIS V424-FXV/K/400-50	3	84.6	85	82.5	11.6	6,7	25	1283	966	194	170	54	76
NEXIS V426-FSE/K/400-50	4	85.8	85.8	85	13.5	7,8	25	1390	1041	218	175	61	80
NEXIS V426-FXV/K/400-50	4	85.8	85.8	85	13.5	7,8	25	1390	1041	218	175	61	80
NEXIS V429-FSE/K/400-50	4	85.8	85.8	85	13.5	7,8	25	1465	1116	218	175	62	112
NEXIS V429-FXV/K/400-50	4	85.8	85.8	85	13.5	7,8	25	1465	1116	218	175	62	112
NEXIS V429-TGE/K/400-50	4	85.8	85.8	85	13.5	7,8	30	1442	1093	218	175	68	90
NEXIS V431-FSE/K/400-50	4	85.8	85.8	85	13.5	7,8	25	1490	1141	218	175	63	113
NEXIS V431-FXV/K/400-50	4	85.8	85.8	85	13.5	7,8	25	1490	1141	218	175	63	113
NEXIS V431-TGE/K/400-50	4	85.8	85.8	85	13.5	7,8	30	1467	1118	218	175	69	91

ELECTRICAL AND DIMENSIONAL SPECIFICATIONS NEXIS V6

• PN 16 - G1"1/4 et PN 25 and 30 - DN 32

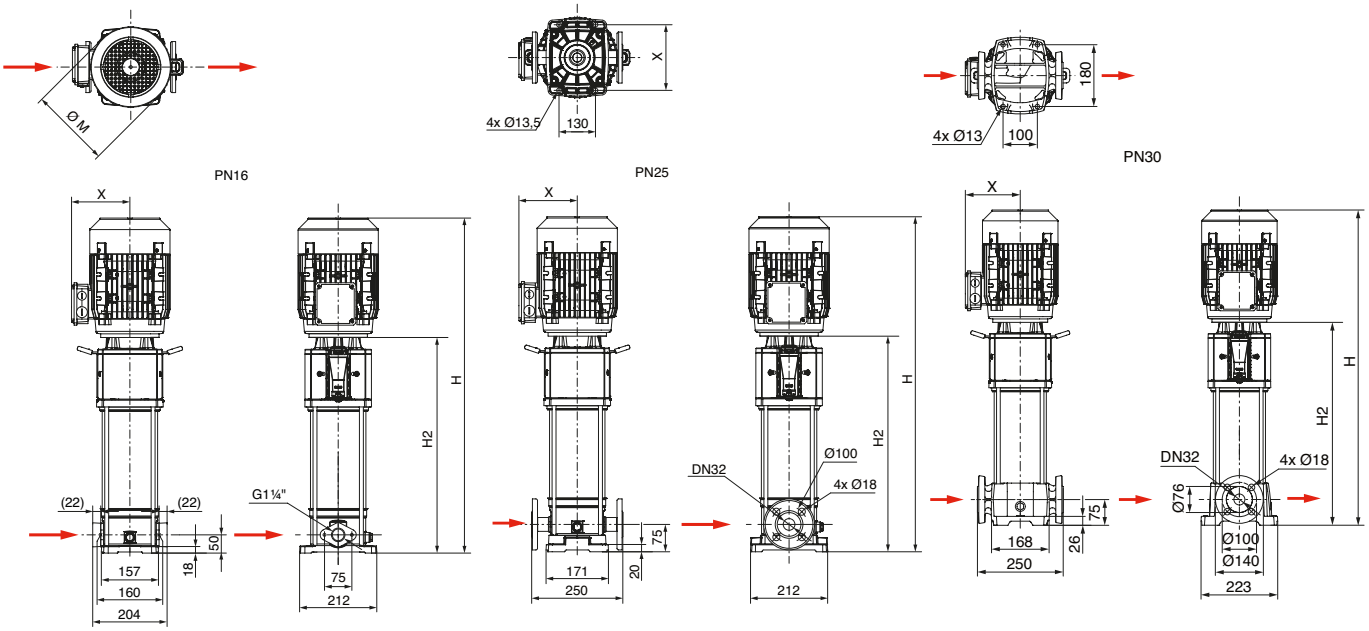

MODEL	P2	Efficiency according to load (%)			Max Current. (A)		PN flanges	H	DIMENSIONS H2	ØM	X	MASS (kg) Nett	Gross
	kW	4/4	3/4	2/4	3~ 230 V	3~ 400V	bar	mm	mm	mm	mm		
NEXIS V601-FXV/K/400-50	0.37	72.8	72.8	71	1.69	0,97	25	645	421	130	121	24	27
NEXIS V601-OSE/K/400-50	0	72.8	72.8	71	1.69	0,97	16	620	396	130	121	23	26
NEXIS V602-FXV/K/400-50	0.55	75.5	75	73	2.27	1,31	25	645	421	130	121	25	29
NEXIS V602-OSE/400-50	0.55	75.5	75	73	2.27	1,31	16	620	396	130	121	24	28
NEXIS V602-OSE/K/400-50	0.55	75.5	75	73	2.27	1,31	16	620	396	130	121	24	28
NEXIS V603-FXV/K/400-50	0.55	75.5	75	73	2.27	1,31	25	683	459	130	121	26	32
NEXIS V603-OSE/400-50	0.55	75.5	75	73	2.27	1,31	16	658	434	130	121	25	29
NEXIS V603-OSE/K/400-50	0.55	75.5	75	73	2.27	1,31	16	658	434	130	121	25	29
NEXIS V604-FXV/K/400-50	0.75	77.4	77.4	76	3.06	1,77	25	740	496	146	127	29	35
NEXIS V604-OSE/400-50	0.75	77.4	77.4	76	3.06	1,77	16	715	471	146	127	28	31
NEXIS V604-OSE/K/400-50	0.75	77.4	77.4	76	3.06	1,77	16	715	471	146	127	28	31
NEXIS V605-FXV/K/400-50	1.1	79.6	79.6	78	4.4	2,6	25	778	534	146	127	31	37
NEXIS V605-OSE/400-50	1.1	79.6	79.6	78	4.4	2,6	16	753	509	146	127	30	36
NEXIS V605-OSE/K/400-50	1.1	79.6	79.6	78	4.4	2,6	16	753	509	146	127	30	36
NEXIS V606-FXV/K/400-50	1.1	79.6	79.6	78	4.4	2,6	25	815	571	146	127	32	38
NEXIS V606-OSE/400-50	1.1	79.6	79.6	78	4.4	2,6	16	790	546	146	127	31	37
NEXIS V606-OSE/K/400-50	1.1	79.6	79.6	78	4.4	2,6	16	790	546	146	127	31	37
NEXIS V607-FSE/K/400-50	1.5	81.3	81.3	80	5.7	3,3	25	898	619	184	149	38	46
NEXIS V607-FXV/K/400-50	1.5	81.3	81.3	80	5.7	3,3	25	898	619	184	149	38	46
NEXIS V607-OSE/400-50	1.5	81.3	81.3	80	5.7	3,3	16	873	594	184	149	36	42
NEXIS V607-OSE/K/400-50	1.5	81.3	81.3	80	5.7	3,3	16	873	594	184	149	36	42
NEXIS V608-FSE/K/400-50	1.5	81.3	81.3	80	5.7	3,3	25	935	656	184	149	39	47
NEXIS V608-FXV/K/400-50	1.5	81.3	81.3	80	5.7	3,3	25	935	656	184	149	39	47
NEXIS V608-OSE/400-50	1.5	81.3	81.3	80	5.7	3,3	16	910	631	184	149	37	45
NEXIS V608-OSE/K/400-50	1.5	81.3	81.3	80	5.7	3,3	16	910	631	184	149	37	45
NEXIS V609-FSE/K/400-50	2.2	83.2	83.2	82	8	4,6	25	973	694	184	149	42	51
NEXIS V609-FXV/K/400-50	2.2	83.2	83.2	82	8	4,6	25	973	694	184	149	42	51
NEXIS V609-OSE/400-50	2.2	83.2	83.2	82	8	4,6	16	948	669	184	149	40	49
NEXIS V609-OSE/K/400-50	2.2	83.2	83.2	82	8	4,6	16	948	669	184	149	40	49
NEXIS V610-FSE/K/400-50	2.2	83.2	83.2	82	8	4,6	25	1010	731	184	149	43	51
NEXIS V610-FXV/K/400-50	2.2	83.2	83.2	82	8	4,6	25	1010	731	184	149	43	51
NEXIS V610-OSE/400-50	2.2	83.2	83.2	82	8	4,6	16	985	706	184	149	41	49
NEXIS V610-OSE/K/400-50	2.2	83.2	83.2	82	8	4,6	16	985	706	184	149	41	49
NEXIS V611-FSE/K/400-50	2.2	83.2	83.2	82	8	4,6	25	1085	806	184	149	44	66
NEXIS V611-FXV/K/400-50	2.2	83.2	83.2	82	8	4,6	25	1085	806	184	149	44	66
NEXIS V611-OSE/400-50	2.2	83.2	83.2	82	8	4,6	16	1060	781	184	149	42	51
NEXIS V611-OSE/K/400-50	2.2	83.2	83.2	82	8	4,6	16	1060	781	184	149	42	51

NEXIS V2/4/6/10/16

ELECTRICAL AND DIMENSIONAL SPECIFICATIONS NEXIS V6

• PN 16 - G1"1/4 and PN 25 and 30 - DN 32

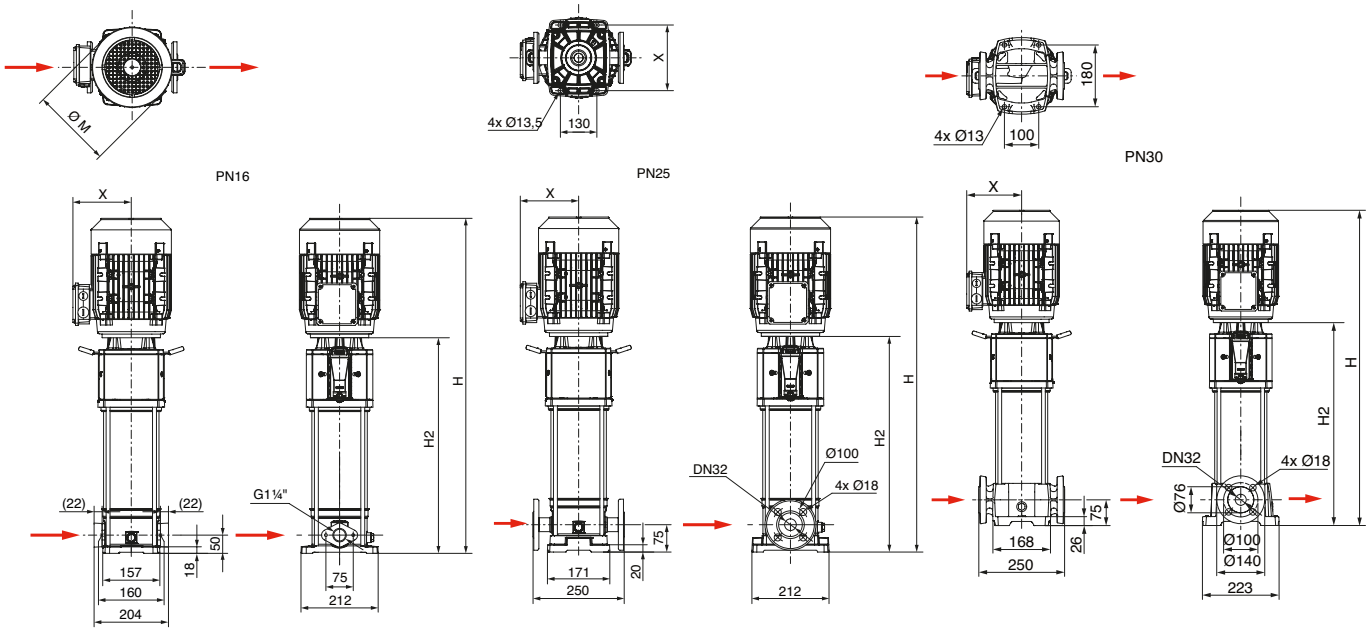

MODEL	P2	Efficiency according to load (%)			Max Current. (A)		PN flanges	DIMENSIONS H	H2	ØM	X	MASS (kg) Nett	Gross
	kW	4/4	3/4	2/4	3~ 230 V	3~ 400V	bar	mm	mm	mm	mm		
NEXIS V612-FXV/K/400-50	3	84.6	85	82.5	11.6	6,7	25	1133	816	194	170	53	75
NEXIS V612-OSE/400-50	3	84.6	85	82.5	11.6	6,7	16	1108	791	194	170	51	73
NEXIS V612-OSE/K/400-50	3	84.6	85	82.5	11.6	6,7	16	1108	791	194	170	51	73
NEXIS V613-FSE/K/400-50	3	84.6	85	82.5	11.6	6,7	25	1208	891	194	170	54	76
NEXIS V613-FXV/K/400-50	3	84.6	85	82.5	11.6	6,7	25	1208	891	194	170	54	76
NEXIS V613-OSE/400-50	3	84.6	85	82.5	11.6	6,7	16	1183	866	194	170	52	74
NEXIS V613-OSE/K/400-50	3	84.6	85	82.5	11.6	6,7	16	1183	866	194	170	52	74
NEXIS V614-FSE/K/400-50	3	84.6	85	82.5	11.6	6,7	25	1208	891	194	170	54	76
NEXIS V614-FXV/K/400-50	3	84.6	85	82.5	11.6	6,7	25	1208	891	194	170	54	76
NEXIS V614-OSE/400-50	3	84.6	85	82.5	11.6	6,7	16	1183	866	194	170	52	74
NEXIS V614-OSE/K/400-50	3	84.6	85	82.5	11.6	6,7	16	1183	866	194	170	52	74
NEXIS V615-FSE/K/400-50	3	84.6	85	82.5	11.6	6,7	25	1283	966	194	170	56	78
NEXIS V615-FXV/K/400-50	3	84.6	85	82.5	11.6	6,7	25	1283	966	194	170	56	78
NEXIS V615-OSE/400-50	3	84.6	85	82.5	11.6	6,7	16	1258	941	194	170	54	76
NEXIS V615-OSE/K/400-50	3	84.6	85	82.5	11.6	6,7	16	1258	941	194	170	54	76
NEXIS V616-FSE/K/400-50	4	85.8	85.8	85	13.5	7,8	25	1315	966	218	175	62	84
NEXIS V616-FXV/K/400-50	4	85.8	85.8	85	13.5	7,8	25	1315	966	218	175	62	84
NEXIS V616-OSE/400-50	4	85.8	85.8	85	13.5	7,8	16	1290	941	218	175	60	82
NEXIS V616-OSE/K/400-50	4	85.8	85.8	85	13.5	7,8	16	1290	941	218	175	60	82
NEXIS V618-FSE/K/400-50	4	85.8	85.8	85	13.5	7,8	25	1390	1041	218	175	64	86
NEXIS V618-FXV/K/400-50	4	85.8	85.8	85	13.5	7,8	25	1390	1041	218	175	64	86
NEXIS V620-FSE/K/400-50	4	85.8	85.8	85	13.5	7,8	25	1465	1116	218	175	65	115
NEXIS V620-FXV/K/400-50	4	85.8	85.8	85	13.5	7,8	25	1465	1116	218	175	65	115
NEXIS V621-FSE/K/400-50	5.5	88.1	86.9	85.2		10,7	25	1519	1191	232	160	73	123
NEXIS V621-FXV/K/400-50	5.5	88.1	86.9	85.2		10,7	25	1519	1191	232	160	73	123
NEXIS V623-FSE/K/400-50	5.5	88.1	86.9	85.2		10,7	25	1594	1266	232	160	74	124
NEXIS V623-FXV/K/400-50	5.5	88.1	86.9	85.2		10,7	25	1594	1266	232	160	74	124
NEXIS V623-TGE/K/400-50	5.5	88.1	86.9	85.2		10,7	30	1571	1243	232	160	78	128
NEXIS V625-FSE/K/400-50	5.5	88.1	86.9	85.2		10,7	25	1669	1341	232	160	75	125
NEXIS V625-FXV/K/400-50	5.5	88.1	86.9	85.2		10,7	25	1669	1341	232	160	75	125
NEXIS V625-TGE/K/400-50	5.5	88.1	86.9	85.2		10,7	30	1646	1318	232	160	79	129
NEXIS V627-FSE/K/400-50	5.5	88.1	86.9	85.2		10,7	25	1744	1416	232	160	78	128
NEXIS V627-FXV/K/400-50	5.5	88.1	86.9	85.2		10,7	25	1744	1416	232	160	78	128
NEXIS V628-TGE/K/400-50	5.5	88.1	86.9	85.2		10,7	30	1721	1393	232	160	82	132
NEXIS V630-TGE/K/400-50	7.5	89.5	89.9	88.5		14	30	1983	1588	220	160	103	153
NEXIS V633-TGE/K/400-50	7.5	89.5	89.9	88.5		14	30	2095	1700	220	160	106	156

ELECTRICAL AND DIMENSIONAL SPECIFICATIONS NEXIS V10

• PN 16 - G1"1/2 and PN 25 and PN 30 - DN 40

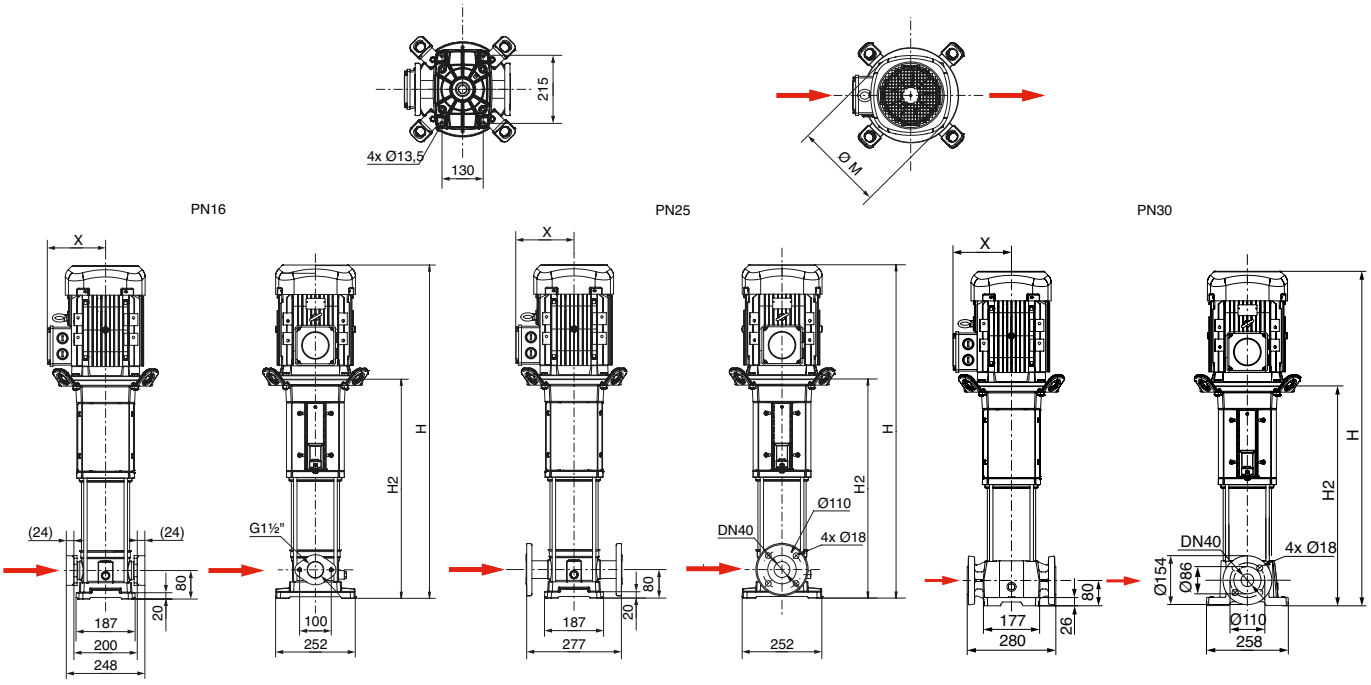

MODEL	P2	Efficiency according to load (%)			Max Current. (A)		PN flanges	DIMENSIONS				MASS (kg)	
								H	H2	ØM	X	Nett	Gross
	kW	4/4	3/4	2/4	3~ 230 V	3~ 400V	bar	mm	mm	mm	mm		
NEXIS V1001-FXV/K/400-50	0.55	75.5	75	73	2.27	1,31	25	641	417	130	121	27	30
NEXIS V1001-OSE/K/400-50	0.55	75.5	75	73	2.27	1,31	16	641	417	130	121	27	30
NEXIS V1002-FXV/K/400-50	0.75	77.4	77.4	76	3.06	1,77	25	661	417	146	127	29	32
NEXIS V1002-OSE/400-50	0.75	77.4	77.4	76	3.06	1,77	16	661	417	146	127	29	32
NEXIS V1002-OSE/K/400-50	0.75	77.4	77.4	76	3.06	1,77	16	661	417	146	127	29	32
NEXIS V1003-FXV/K/400-50	1.1	79.6	79.6	78	4.4	2,6	25	699	455	146	127	31	37
NEXIS V1003-OSE/400-50	1.1	79.6	79.6	78	4.4	2,6	16	699	455	146	127	31	37
NEXIS V1003-OSE/K/400-50	1.1	79.6	79.6	78	4.4	2,6	16	699	455	146	127	31	37
NEXIS V1004-FXV/K/400-50	1.5	81.3	81.3	80	5.7	3,3	25	781	502	184	149	37	43
NEXIS V1004-OSE/400-50	1.5	81.3	81.3	80	5.7	3,3	16	781	502	184	149	37	43
NEXIS V1004-OSE/K/400-50	1.5	81.3	81.3	80	5.7	3,3	16	781	502	184	149	37	43
NEXIS V1005-FSE/K/400-50	2.2	83.2	83.2	82	8	4,6	25	819	540	184	149	40	46
NEXIS V1005-FXV/K/400-50	2.2	83.2	83.2	82	8	4,6	25	819	540	184	149	40	46
NEXIS V1005-OSE/400-50	2.2	83.2	83.2	82	8	4,6	16	819	540	184	149	40	46
NEXIS V1005-OSE/K/400-50	2.2	83.2	83.2	82	8	4,6	16	819	540	184	149	40	46
NEXIS V1006-FSE/K/400-50	2.2	83.2	83.2	82	8	4,6	25	856	577	184	149	41	47
NEXIS V1006-FXV/K/400-50	2.2	83.2	83.2	82	8	4,6	25	856	577	184	149	41	47
NEXIS V1006-OSE/400-50	2.2	83.2	83.2	82	8	4,6	16	856	577	184	149	41	47
NEXIS V1006-OSE/K/400-50	2.2	83.2	83.2	82	8	4,6	16	856	577	184	149	41	47
NEXIS V1007-FSE/K/400-50	3	84.6	85	82.5	11.6	6,7	25	942	625	194	170	50	56
NEXIS V1007-FXV/K/400-50	3	84.6	85	82.5	11.6	6,7	25	942	625	194	170	50	56
NEXIS V1007-OSE/400-50	3	84.6	85	82.5	11.6	6,7	16	942	625	194	170	50	56
NEXIS V1007-OSE/K/400-50	3	84.6	85	82.5	11.6	6,7	16	942	625	194	170	50	56
NEXIS V1008-FSE/K/400-50	3	84.6	85	82.5	11.6	6,7	25	979	662	194	170	51	57
NEXIS V1008-FXV/K/400-50	3	84.6	85	82.5	11.6	6,7	25	979	662	194	170	51	57
NEXIS V1008-OSE/400-50	3	84.6	85	82.5	11.6	6,7	16	979	662	194	170	51	57
NEXIS V1008-OSE/K/400-50	3	84.6	85	82.5	11.6	6,7	16	979	662	194	170	51	57
NEXIS V1009-FSE/K/400-50	4	85.8	85.8	85	13.5	7,8	25	1049	700	218	175	58	77
NEXIS V1009-FXV/K/400-50	4	85.8	85.8	85	13.5	7,8	25	1049	700	218	175	58	77
NEXIS V1009-OSE/400-50	4	85.8	85.8	85	13.5	7,8	16	1049	700	218	175	58	77
NEXIS V1009-OSE/K/400-50	4	85.8	85.8	85	13.5	7,8	16	1049	700	218	175	58	77
NEXIS V1010-FSE/K/400-50	4	85.8	85.8	85	13.5	7,8	25	1086	737	218	175	59	81
NEXIS V1010-FXV/K/400-50	4	85.8	85.8	85	13.5	7,8	25	1086	737	218	175	59	81
NEXIS V1010-OSE/400-50	4	85.8	85.8	85	13.5	7,8	16	1086	737	218	175	59	81
NEXIS V1010-OSE/K/400-50	4	85.8	85.8	85	13.5	7,8	16	1086	737	218	175	59	81

NEXIS V2/4/6/10/16

ELECTRICAL AND DIMENSIONAL SPECIFICATIONS NEXIS V10

• PN 16 - G1"1/2 and PN 25 and PN 30 - DN 40

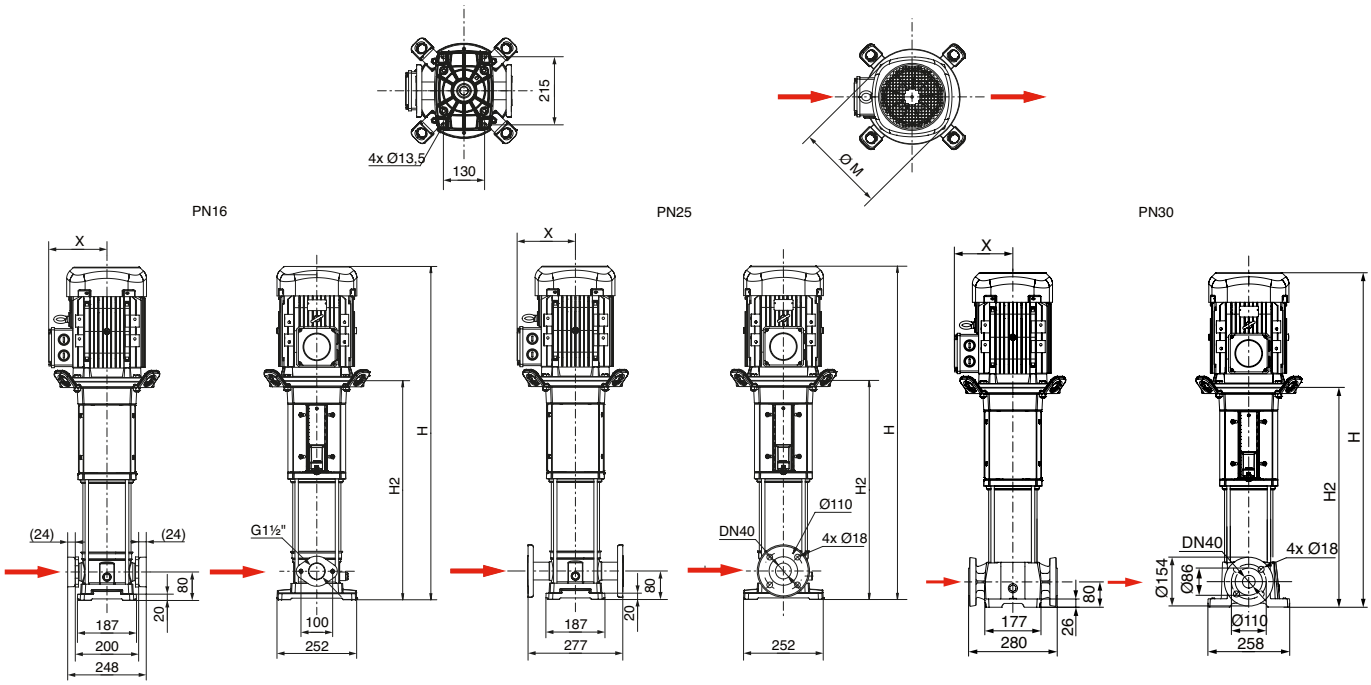

MODEL	P2	Efficiency according to load (%)			Max Current. (A)		PN flanges	DIMENSIONS H	H2	ØM	X	MASS (kg) Nett	Gross
	kW	4/4	3/4	2/4	3~ 230 V	3~ 400V	bar	mm	mm	mm	mm		
NEXIS V1011-FSE/K/400-50	4	85.8	85.8	85	13.5	7,8	25	1161	812	218	175	60	82
NEXIS V1011-FXV/K/400-50	4	85.8	85.8	85	13.5	7,8	25	1161	812	218	175	60	82
NEXIS V1011-OSE/400-50	4	85.8	85.8	85	13.5	7,8	16	1161	812	218	175	60	82
NEXIS V1011-OSE/K/400-50	4	85.8	85.8	85	13.5	7,8	16	1161	812	218	175	60	82
NEXIS V1012-FSE/K/400-50	5.5	88.1	86.9	85.2		10,7	25	1140	812	232	160	67	89
NEXIS V1012-FXV/K/400-50	5.5	88.1	86.9	85.2		10,7	25	1140	812	232	160	67	89
NEXIS V1012-OSE/400-50	5.5	88.1	86.9	85.2		10,7	16	1140	812	232	160	67	89
NEXIS V1012-OSE/K/400-50	5.5	88.1	86.9	85.2		10,7	16	1140	812	232	160	67	89
NEXIS V1013-FSE/K/400-50	5.5	88.1	86.9	85.2		10,7	25	1215	887	232	160	68	90
NEXIS V1013-FXV/K/400-50	5.5	88.1	86.9	85.2		10,7	25	1215	887	232	160	68	90
NEXIS V1013-OSE/400-50	5.5	88.1	86.9	85.2		10,7	16	1215	887	232	160	68	90
NEXIS V1013-OSE/K/400-50	5.5	88.1	86.9	85.2		10,7	16	1215	887	232	160	68	90
NEXIS V1015-FSE/K/400-50	5.5	88.1	86.9	85.2		10,7	25	1290	962	232	160	70	92
NEXIS V1015-FXV/K/400-50	5.5	88.1	86.9	85.2		10,7	25	1290	962	232	160	70	92
NEXIS V1017-FSE/K/400-50	7.5	89.5	89.9	88.5		14	25	1552	1157	220	160	90	140
NEXIS V1017-FXV/K/400-50	7.5	89.5	89.9	88.5		14	25	1552	1157	220	160	90	140
NEXIS V1019-FSE/K/400-50	7.5	89.5	89.9	88.5		14	25	1627	1232	220	160	91	141
NEXIS V1019-FXV/K/400-50	7.5	89.5	89.9	88.5		14	25	1627	1232	220	160	91	141
NEXIS V1021-FSE/K/400-50	7.5	89.5	89.9	88.5		14	25	1702	1307	220	160	93	143
NEXIS V1021-FXV/K/400-50	7.5	89.5	89.9	88.5		14	25	1702	1307	220	160	93	143
NEXIS V1021-TGE/K/400-50	7.5	89.5	89.9	88.5		14	30	1702	1307	220	160	104	154
NEXIS V1023-FSE/K/400-50	9	88.8	88.4	86.6		16,3	25	1777	1382	279	182	106	156
NEXIS V1023-FXV/K/400-50	9	88.8	88.4	86.6		16,3	25	1777	1382	279	182	106	156
NEXIS V1023-TGE/K/400-50	9	88.8	88.4	86.6		16,3	30	1777	1382	279	182	116	166

ELECTRICAL AND DIMENSIONAL SPECIFICATIONS NEXIS V16

• PN 16 - G2» and PN 25 and PN 30 - DN 50

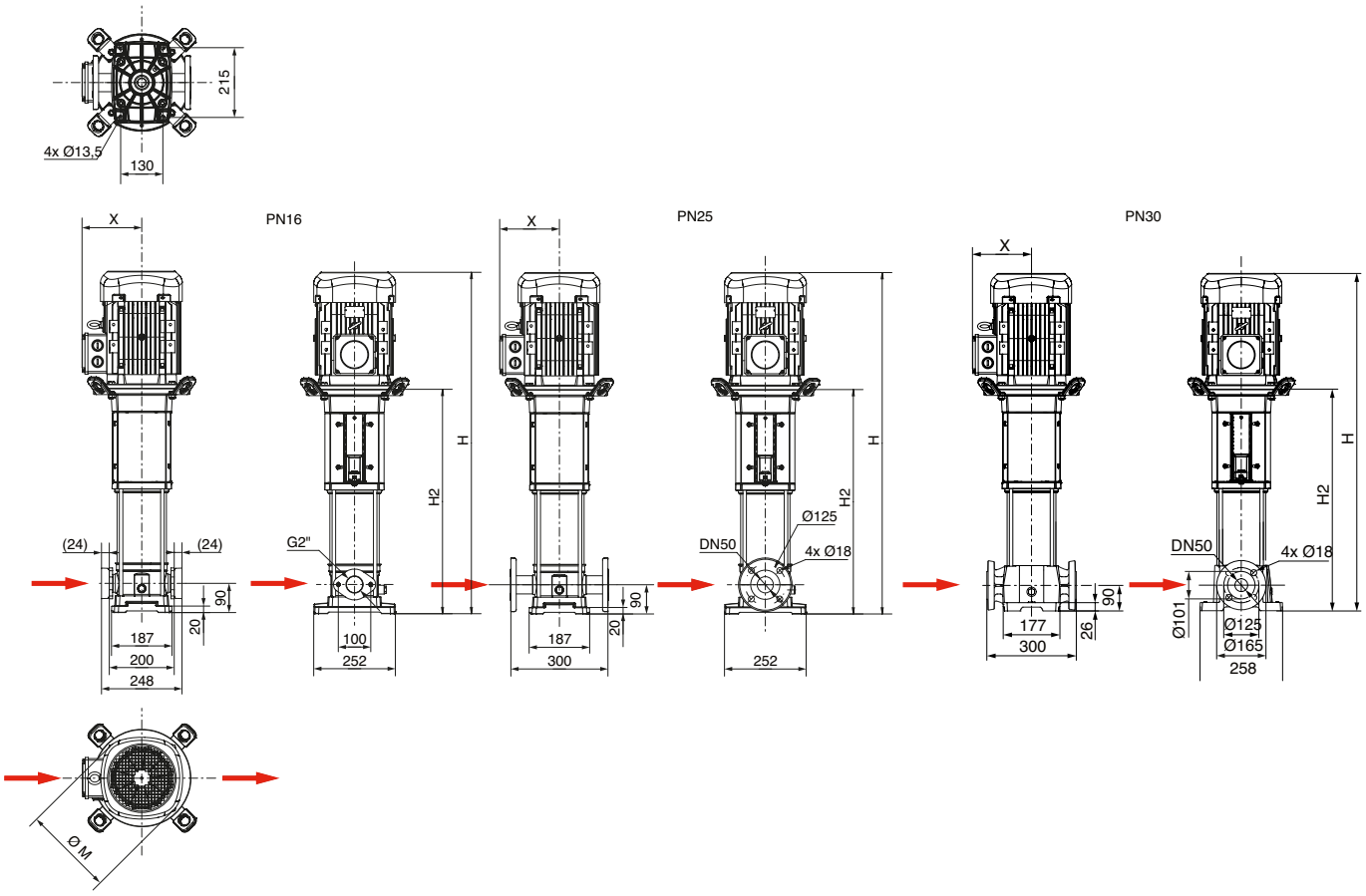

MODÈLE	P2	Efficiency according to load (%)			Max Current. (A)		PN flanges	DIMENSIONS				MASS (kg)	
								H	H2	ØM	X	Nett	Gross
	kW	4/4	3/4	2/4	3~ 230 V	3~ 400V	bar	mm	mm	mm	mm		
NEXIS V1601-FXV/K/400-50	0.75	77.4	77.4	76	3.06	1,77	25	696	452	146	127	32	38
NEXIS V1601-OSE/K/400-50	0.75	77.4	77.4	76	3.06	1,77	16	696	452	146	127	32	38
NEXIS V1602-FXV/K/400-50	1.5	81.3	81.3	80	5.7	3,3	25	741	462	184	149	38	44
NEXIS V1602-OSE/400-50	1.5	81.3	81.3	80	5.7	3,3	16	741	462	184	149	38	44
NEXIS V1602-OSE/K/400-50	1.5	81.3	81.3	80	5.7	3,3	16	741	462	184	149	38	44
NEXIS V1603-FXV/K/400-50	2.2	83.2	83.2	82	8	4,6	25	791	512	184	149	41	47
NEXIS V1603-OSE/400-50	2.2	83.2	83.2	82	8	4,6	16	791	512	184	149	41	47
NEXIS V1603-OSE/K/400-50	2.2	83.2	83.2	82	8	4,6	16	791	512	184	149	41	47
NEXIS V1604-FXV/K/400-50	3	84.6	85	82.5	11.6	6,7	25	889	572	194	170	50	56
NEXIS V1604-OSE/400-50	3	84.6	85	82.5	11.6	6,7	16	889	572	194	170	50	56
NEXIS V1604-OSE/K/400-50	3	84.6	85	82.5	11.6	6,7	16	889	572	194	170	50	56
NEXIS V1605-FSE/400-50	4	85.8	85.8	85	13.5	7,8	16	971	622	218	175	57	66
NEXIS V1605-FSE/K/400-50	4	85.8	85.8	85	13.5	7,8	25	971	622	218	175	57	66
NEXIS V1605-FXV/K/400-50	4	85.8	85.8	85	13.5	7,8	25	971	622	218	175	57	66
NEXIS V1605-OSE/400-50	4	85.8	85.8	85	13.5	7,8	16	971	622	218	175	57	66
NEXIS V1605-OSE/K/400-50	4	85.8	85.8	85	13.5	7,8	16	971	622	218	175	57	66
NEXIS V1606-FSE/K/400-50	4	85.8	85.8	85	13.5	7,8	25	1021	672	218	175	58	77
NEXIS V1606-FXV/K/400-50	4	85.8	85.8	85	13.5	7,8	25	1021	672	218	175	58	77
NEXIS V1606-OSE/400-50	4	85.8	85.8	85	13.5	7,8	16	1021	672	218	175	58	77
NEXIS V1606-OSE/K/400-50	4	85.8	85.8	85	13.5	7,8	16	1021	672	218	175	58	77
NEXIS V1607-FSE/K/400-50	5.5	88.1	86.9	85.2		10,7	25	1050	722	232	160	66	85
NEXIS V1607-FXV/K/400-50	5.5	88.1	86.9	85.2		10,7	25	1050	722	232	160	66	85
NEXIS V1607-OSE/400-50	5.5	88.1	86.9	85.2		10,7	16	1050	722	232	160	66	85
NEXIS V1607-OSE/K/400-50	5.5	88.1	86.9	85.2		10,7	16	1050	722	232	160	66	85
NEXIS V1608-FSE/K/400-50	5.5	88.1	86.9	85.2		10,7	25	1100	772	232	160	67	89
NEXIS V1608-FXV/K/400-50	5.5	88.1	86.9	85.2		10,7	25	1100	772	232	160	67	89

NEXIS V2/4/6/10/16

ELECTRICAL AND DIMENSIONAL SPECIFICATIONS NEXIS V16

• PN 16 - G2» and PN 25 and PN 30 - DN 50

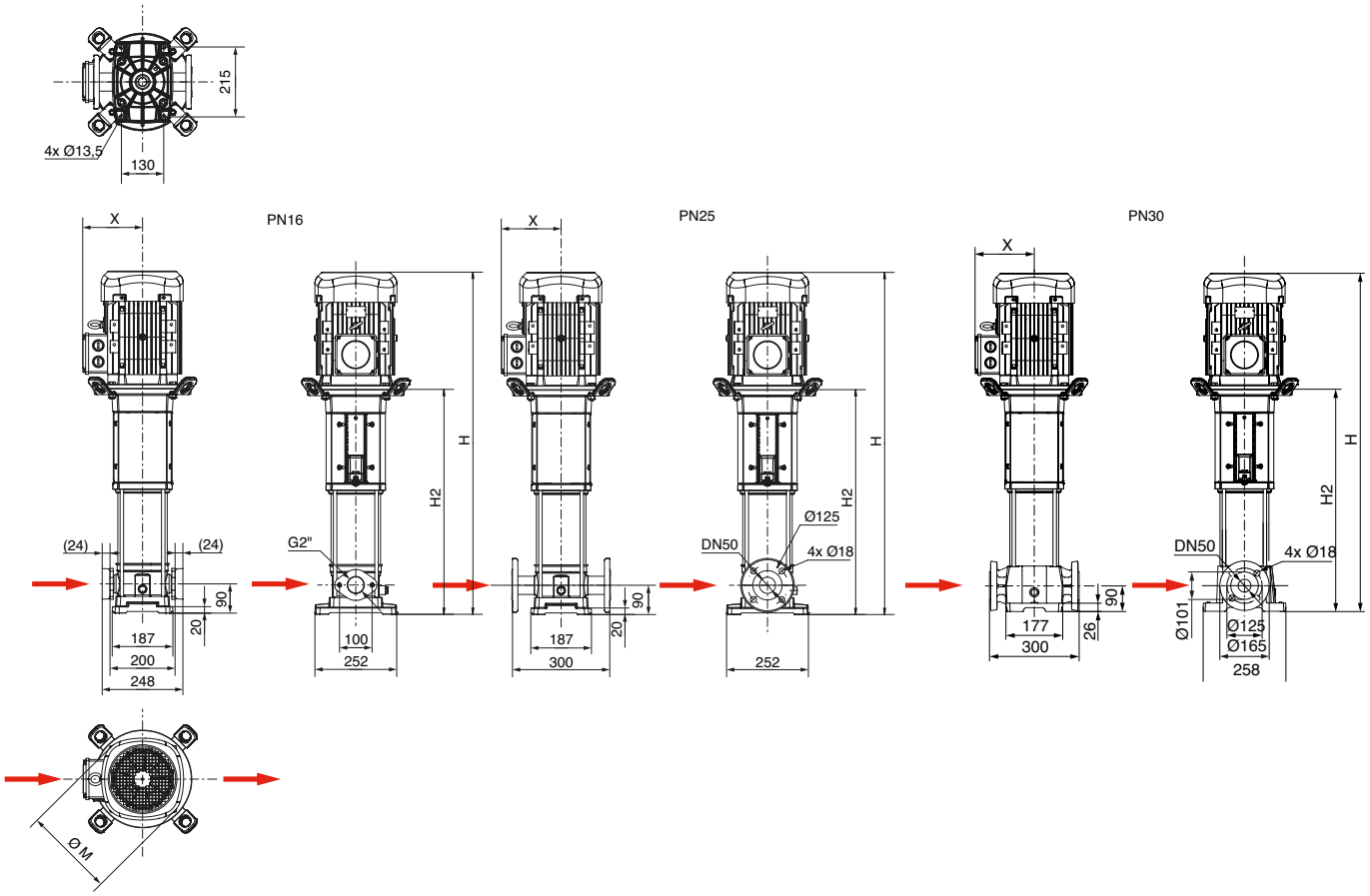

MODEL	P2	Efficiency according to load (%)			Max Current. (A)		PN flanges	DIMENSIONS				MASS (kg)	
								H	H2	ØM	X	Nett	Gross
	kW	4/4	3/4	2/4	3~ 230 V	3~ 400V	bar	mm	mm	mm	mm		
NEXIS V1608-OSE/400-50	5.5	88.1	86.9	85.2		10,7	16	1100	772	232	160	67	89
NEXIS V1608-OSE/K/400-50	5.5	88.1	86.9	85.2		10,7	16	1100	772	232	160	67	89
NEXIS V1609-FSE/K/400-50	7.5	89.5	89.9	88.5		14	25	1337	942	220	160	86	108
NEXIS V1609-FXV/K/400-50	7.5	89.5	89.9	88.5		14	25	1337	942	220	160	86	108
NEXIS V1609-OSE/K/400-50	7.5	89.5	89.9	88.5		14	16	1337	942	220	160	86	108
NEXIS V1610-FSE/K/400-50	7.5	89.5	89.9	88.5		14	25	1487	1092	220	160	88	138
NEXIS V1610-FXV/K/400-50	7.5	89.5	89.9	88.5		14	25	1487	1092	220	160	88	138
NEXIS V1610-OSE/K/400-50	7.5	89.5	89.9	88.5		14	16	1487	1092	220	160	88	138
NEXIS V1611-FSE/K/400-50	7.5	89.5	89.9	88.5		14	25	1487	1092	220	160	89	139
NEXIS V1611-FXV/K/400-50	7.5	89.5	89.9	88.5		14	25	1487	1092	220	160	89	139
NEXIS V1611-OSE/K/400-50	7.5	89.5	89.9	88.5		14	16	1487	1092	220	160	89	139
NEXIS V1612-FSE/K/400-50	9	88.8	88.4	86.6		16,3	25	1487	1092	279	182	99	149
NEXIS V1612-FXV/K/400-50	9	88.8	88.4	86.6		16,3	25	1487	1092	279	182	99	149
NEXIS V1613-FSE/K/400-50	9	88.8	88.4	86.6		16,3	25	1637	1242	279	182	102	152
NEXIS V1613-FXV/K/400-50	9	88.8	88.4	86.6		16,3	25	1637	1242	279	182	102	152
NEXIS V1616-FSE/K/400-50	11	89.4	89.3	87.5		19,4	25	1897	1421	323	200	148	198
NEXIS V1616-FXV/K/400-50	11	89.4	89.3	87.5		19,4	25	1897	1421	323	200	148	198
NEXIS V1616-TGE/K/400-50	11	89.4	89.3	87.5		19,4	30	1897	1421	323	200	158	218
NEXIS V1618-TGE/K/400-50	15	90.3	90.2	88.4		25,7	30	1897	1421	323	200	159	219
NEXIS V1621-TGE/K/400-50	15	90.3	90.2	88.4		25,7	30	2047	1571	323	200	162	222

FITTING - REMOVAL OF CARTRIDGE SEAL

• Type of screws and overview of tightening torque

Pump components		Type	Number	Recommended tightening torque (N.m)
Coupling protector		ST3.9	4	0,7
Coupling	FT100	M6	4	10
	FT115	M8	4	22,5
	FT130			
	FF265			
	FF300	M12	4	80
Spacer	FF265	M8	4	22,5
	FF300	M10	4	45
Shaft end		M8	1	15
Collar		M5	3	4
Cartridge		M6	4	7

NEXIS V2/4/6/10/16

MAINS ACCESSORIES

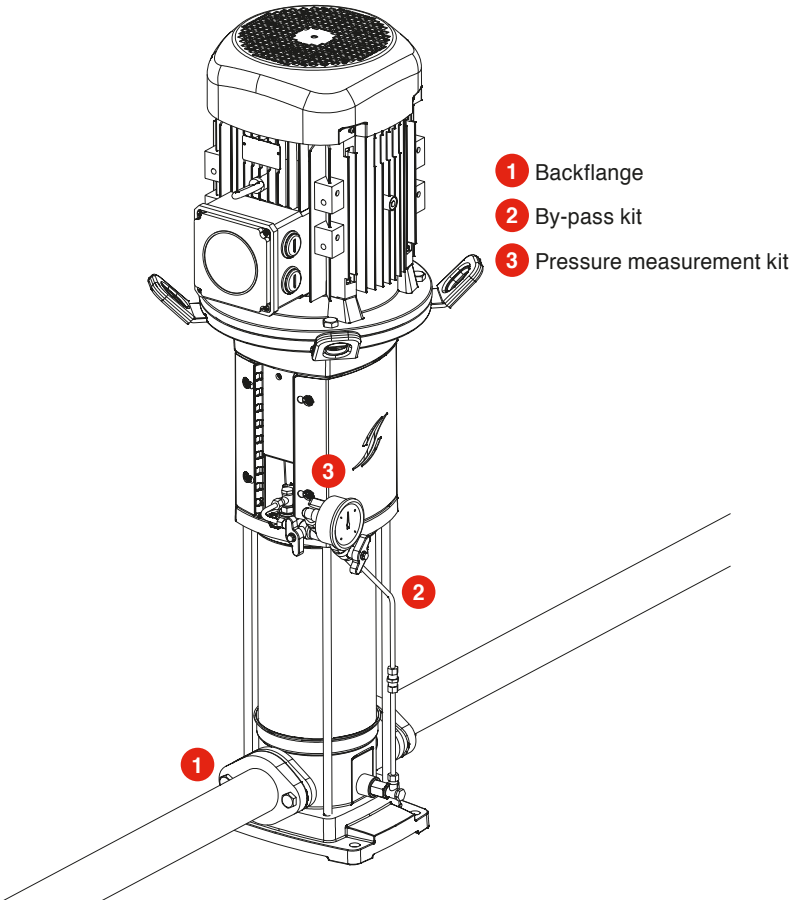

Order reference	Pump type	Designation
4014457	Nexis V2/4	Kit of 2 weld-on G1" DN 25 PN16/40 backflanges 4014451 in 304 stainless steel (supplied with the pump by default)
4014451	Nexis V2/4	Kit of two DN25 PN25/40 weld-on backflanges 4014470 in steel
4014470	Nexis V2/4	Kit of two DN25 PN25/40 screw-on backflanges in 316L stainless steel
4014458	Nexis V6	Kit of 2 oval G11/4" PN16 backflanges in 304 stainless steel (supplied with the pump by default)
4014452	Nexis V6	Kit of 2 weld-on DN32 PN25/40 40 4014471 backflanges in steel
4014471	Nexis V6	Kit of two DN32 PN25/40 screw-on backflanges in 316L stainless steel
4014459	Nexis V10	Kit of 2 oval G11/2" PN16 backflanges in 304 stainless steel (supplied with the pump by default)
4014453	Nexis V10	Kit of 2 weld-on DN40 PN25/40 40 4014472 backflanges in steel
4014472	Nexis V10	Kit of two DN40 PN25/40 screw-on backflanges in 316L stainless steel
4055062	Nexis V16	Kit 2 oval G2" PN16 backflanges in 304 stainless steel (supplied with the pump by default)
4038114	Nexis V16	Kit of 2 weld-on DN50 PN25/40 backflanges in steel
4038116	Nexis V16	Kit of two DN50 PN25/40 screw-on backflanges in 316L stainless steel
4048065	Nexis V6/10/16	16-bar pressure measurement kit in stainless steel
4048066	Nexis V6/10/16	25-bar pressure measurement kit in stainless steel
4146785	Nexis V2/4/6/10/16	25-bar bypass kit
4146787	Nexis V2/4/6/10/16	Pressure measurement and 25-bar bypass kit

FEATURES

a) Electrical

- "T" types: Three-phase 230-400 V - 50 Hz or three-phase 400 V Δ above 4 kW.
- Motors MUST be protected by a slave switch.

b) Installation

- On solid base using foundation bolts.
- Installation of pump in suction mode with compulsory strainer foot valve, or flooded suction mode on storage tank or mains water system with low water protection kit.
- Connection to pump by backflanges: oval for the PN 16 series and round for the PN25 series respectively.
- The installation must allow for the protection of the pump against adverse weather conditions and frost (avoid direct exposure to rain or sun).

c) Packaging

- **Pump without motor available on request**
- **60 Hz pump on request**
- **Collective packaging available on request**
- **PN16 series**

with oval flanges: pump supplied with kit of gaskets, bolts and backflanges.

- **PN25 series**

with round flanges: pump supplied with gaskets and bolts, without backflanges (optional).

- **Filling funnel supplied with the pump**

d) Maintenance

Replacement of recommended spare parts (•) .

OTHER ACCESSORIES

- Shut-off valves
- Non-return valves
- Strainer foot valve
- Vibration-damping sleeves
- Bladder or galvanised tanks
- Surge tanks
- ME low-water protection kit
- Protective slave switch for motor...

OPERATING RANGES

Flow rates of up to:	**80 m³/h**
Manometric heads of up to:	**285 m**
Max. delivery pressure:	**16, 25 & 30 bar**
Max. suction pressure:	**10 bar**
Temperature range:	**– 20° à + 120°**C**
Max. ambient temperature:	**+50°C Depending on the application**
DN of ports:	**50 to 80**
Reference MEI*:	**≥ 0,70**

*Minimum Efficiency Index

** according to mechanical seal

NEXIS V22/36/52

STAINLESS STEEL VERTICAL HIGH-EFFICIENCY MULTI-STAGE PUMPS

In-line series - 50 Hz

New generation of multi-stage pumps

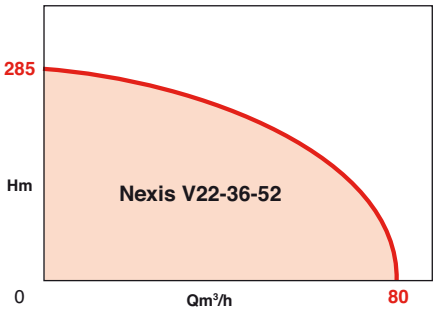

APPLICATIONS

Pumping of clean, non-muddy liquids in the housing, industrial and agricultural sectors:
- Supply - Boosting
- Watering - Irrigation
- High-pressure washing
- Water treatment (demineralisation, filtration)
- Fire protection
- Heating - Air conditioning

And for incorporation into all modular systems.

Pumped fluids

- **Standard range - 1.4307 stainless steel hydraulics (304L)**: clear and non-corrosive liquids (drinking water, glycol water, etc.)
- **Corrosive water range - hydraulics 1.4404 (316L) stainless steel**: (seawater, demineralised water, chlorinated water, etc)

ADVANTAGES

HIGH EFFICENCY
- High-efficiency stainless steel laser-welded impellers and stages: 1.4307 (AISI 304L), laser protective atmosphere (for better corrosion resistance over time).
- IEC ≥ IE2 standard motor.

INSTALLATION
- Easy installation: in-line ports, mobile flanges.
- Modular pump housing: possible to adapt the height and flanges to fit existing systems.
- Adjustable lantern ring and terminal box (several positions on request).
- Hoisting mechanism for easier maintenance.

MAINTENANCE
- Optional XCare integral protective module for monitoring the pump.
- Easy maintenance:
- Standard mechanical seals available for the entire range for temperatures up to 120 ° C.
- Spacer concept available on all models with motor weight ≥ 40 kg . Allows the installer or operator to replace the mechanical seal without disassembling the moteur.

Certified ACS



• **Option de protection intégrée X-Care**



• **Optimised 2D/3D high-efficiency hydraulics**



• **Cartridge mechanical seal Standard seal**



• **Mobile flanges and modular construction Easy installation**

• **Nexis V5200**
All-1.4307 (304L) stainless steel hydraulic assembly



• **Nexis V2200**
All-1.4404 (316L) stainless steel hydraulic assembly



NEXIS V22/36/52

DESIGN

• Hydraulic part

- Centrifugal. Multi-stage, 1 to 16 stages.
- Vertical axis, in-line suction/delivery orifices in the lower part.
- Flanged housing in PN 16, PN 25 and PN 40 for 30 bar versions.
- Reliability of product ensured by one or more intermediate bearings.
- Standardised mechanical seal ensures leak-tightness of the shaft passage.
- Shaft protected from corrosion by a 316L stainless steel sleeve underneath the mechanical seal.
- Housing and hydraulics assembly assembled by stud bolts.

• Motors

- IEC ≥ IE2. Standard ventilated.
- Flanges and shaft end compliant with IEC standard optimized to gain some space on motor power.
- Connected to pump by coupling with safety guards.

Rotation speed:	2950 tr/mn
4 kW 3~ winding :	230-400 V
above 3~ :	400 V
Frequency :	50 Hz (option 60 Hz)
Insulation class:	155° C (Classe F)
Protection class:	IP 55

Legend : 2-pole motor Ⓜ

BASIC CONSTRUCTION

Main parts	Material	Material
liquids	non-corrosive	corrosive
models	all	all
Suction - discharge housing.	EN GJL 250 cast iron	1.4409 stainless steel (AISI 316L)
Upper motor lantern ring	EN GJL 250 cast iron	EN GJL 250 cast iron
Impellers	1.4307 stainless steel (AISI 304L)	1.4404 stainless steel (AISI 316L)
Cells (stage housing)	1.4307 stainless steel (AISI 304L)	1.4404 stainless steel (AISI 316L)
External pipe sleeve	1.4307 stainless steel (AISI 304L)	1.4404 stainless steel (AISI 316L)
Pump shaft	1.4057 stainless steel (AISI 431)	1.4404 stainless steel (AISI 316L) 1.4462 stainless steel (AISI F51)
Intermediate bearing	Tungsten carbide	Tungsten carbide
Mechanical seal	Si carbide/ Carbon* or Tungsten carbide/ Carbon	Si carbide/ Carbon* or Tungsten carbide/Carbon
Joints toriques	EPDM (120°C) (FKM à la demande)	FKM (Viton 90°C) (EPDM à la demande)
O-rings	1.4404 stainless steel (AISI 316L)	1.4404 stainless steel (AISI 316L)

NOTA :
*** Option :** Si carbide/ Si carbide seal.
**** Option :** certain variants are made of 1.4462 stainless steel

CONSTRUCTION OF NEXIS-V

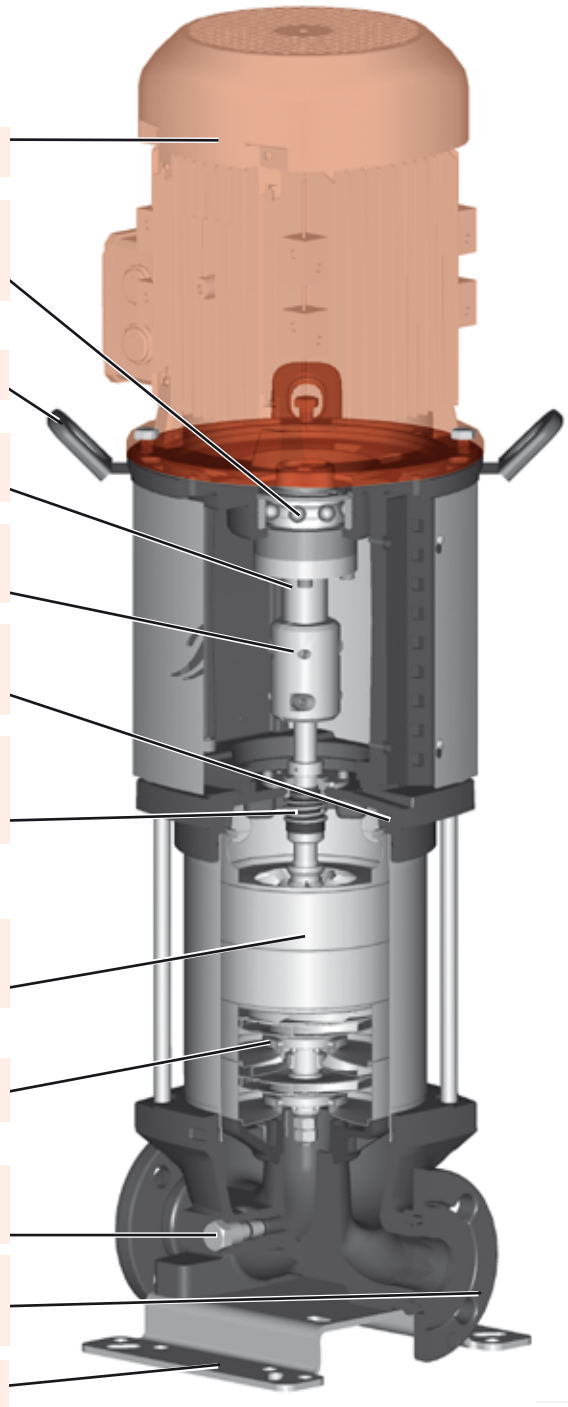

IDENTIFICATION

Nexis V2202/2-OGE/KS/400-50-FF240/XXXX/B

- Pump family
- Nominal flowrate in m³/h (at 50 Hz / 2 poles)
- Number of impellers
- /1 or /2: number of trimmed impellers out of the total number of impellers e.g. 2202/2, 2 trimmed impellers out of 2
- O = PN16 round flanges
  F = PN25 round flanges
  T = PN40 round flanges
- G = EN GJL-250 cast iron pump housing + 304L stainless steel hydraulics
  X = 1.4409 stainless steel pump housing + 316L stainless steel hydraulics
  B = one-piece pump housing made of non-certified cataphoresis-treated cast-iron (GJL-250) drinking water + 304L stainless steel hydraulics
  D = Monobloc pump casiong cast electro-phoresis approved drinking water + 304L stainless steel hydraulics
- E = O-rings: EPDM
  V = O-rings: FKM (VITON)
- K = cartridge mechanical seal
  S = System» orientation (booster pump)
  X = version with integral XCare protective module
- Motor voltage (in V)
- Motor frequency 50 hz / 60 hz
- Lantern ring size option
  Nothing = standard lantern ring
- Variant
  nothing = no option
  EC = collective packaging
  XXXX = customisation
- Version index

PRESENTATION OF ALTERNATIVE CONSTRUCTION

Flow-Flange	P max Mechanical seal	restriction power	Cartridge	Orientation	Materials Pumps (Expanded Standard)															
					Cast iron cataphoresis casing and 304 stainless steel hydraulic CODE: G				316L stainless steel casing and hydraulic CODE: X				Cast iron cataphoresis one-piece casing and 304 stainless steel hydraulic CODE: D/B*				CODES PUMP OPTIONS MSO			CODES MOTOR OPTIONS MSO
					EPDM : Mechanical seal + gaskets		VITON : Mechanical seal + gaskets		EPDM : Mechanical seal + gaskets		VITON : Mechanical seal + gaskets		EPDM : Mechanical seal + gaskets		VITON : Mechanical seal + gaskets					
					E	E + Q1Q1	V	V + Q1Q1	E	E + Q1Q1	V	V + Q1Q1	E	E + Q1Q1	V	V + Q1Q1	P1 / SILFREE (EPDM)	Q7Q7 (EPDM)	RAL...	
22 m³ - DN50	O : 16bars	V : 3kW≥ ... <= 11kW VE : 3kW≥ ... ≥ 7,5kW		S																
36 m³ - DN65			K	KS																
	F : 25bars		K	KS																
52 m³ - DN80	T : 30bars		K	KS																
					Delivery : see below												Delivery : on demand			

ITEM STANDARD (deadline: on stock or 10 days worked LOUVERNE and 11 working days to UNNA)

ARTICLE AVAILABLE ON DEMAND (deadline extended to standard : 15 days worked in LOUVERNE and Unna)

NON AVAILABLE

NEXIS V22/36/52

HYDRAULIC PRE-SELECTION RANGES NEXIS-V - 2 POLES - 50 HZ

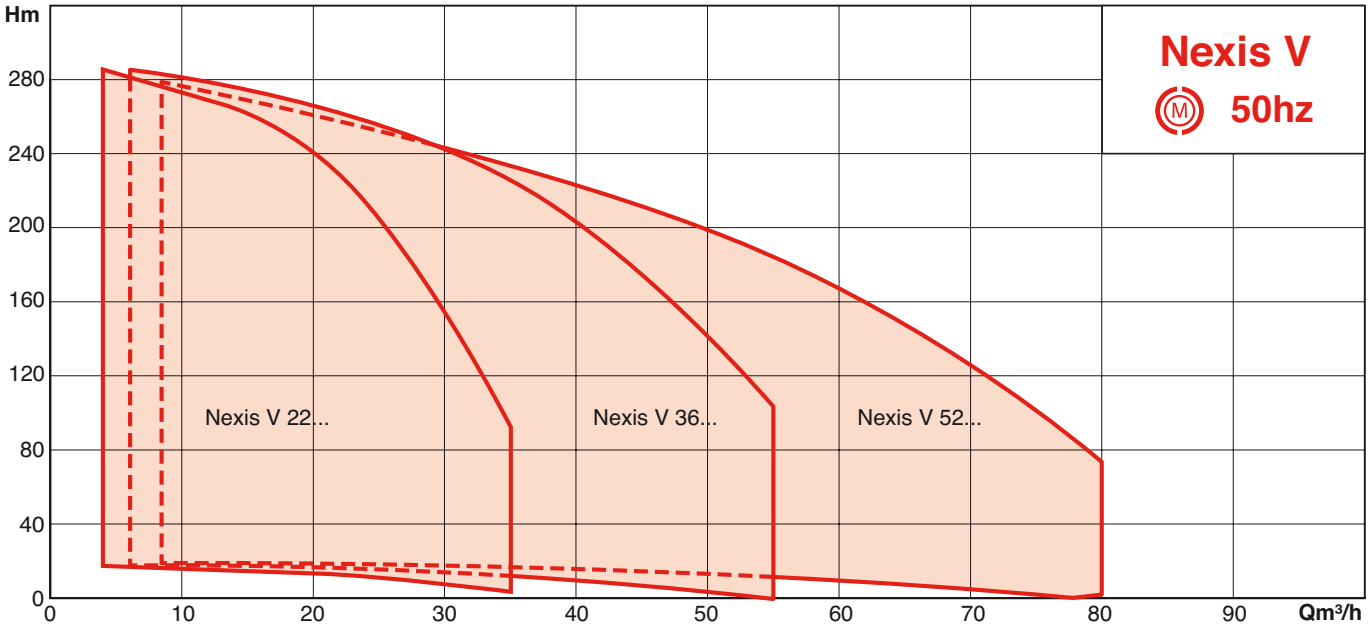

SECTIONAL DIAGRAM - NEXIS-V 22

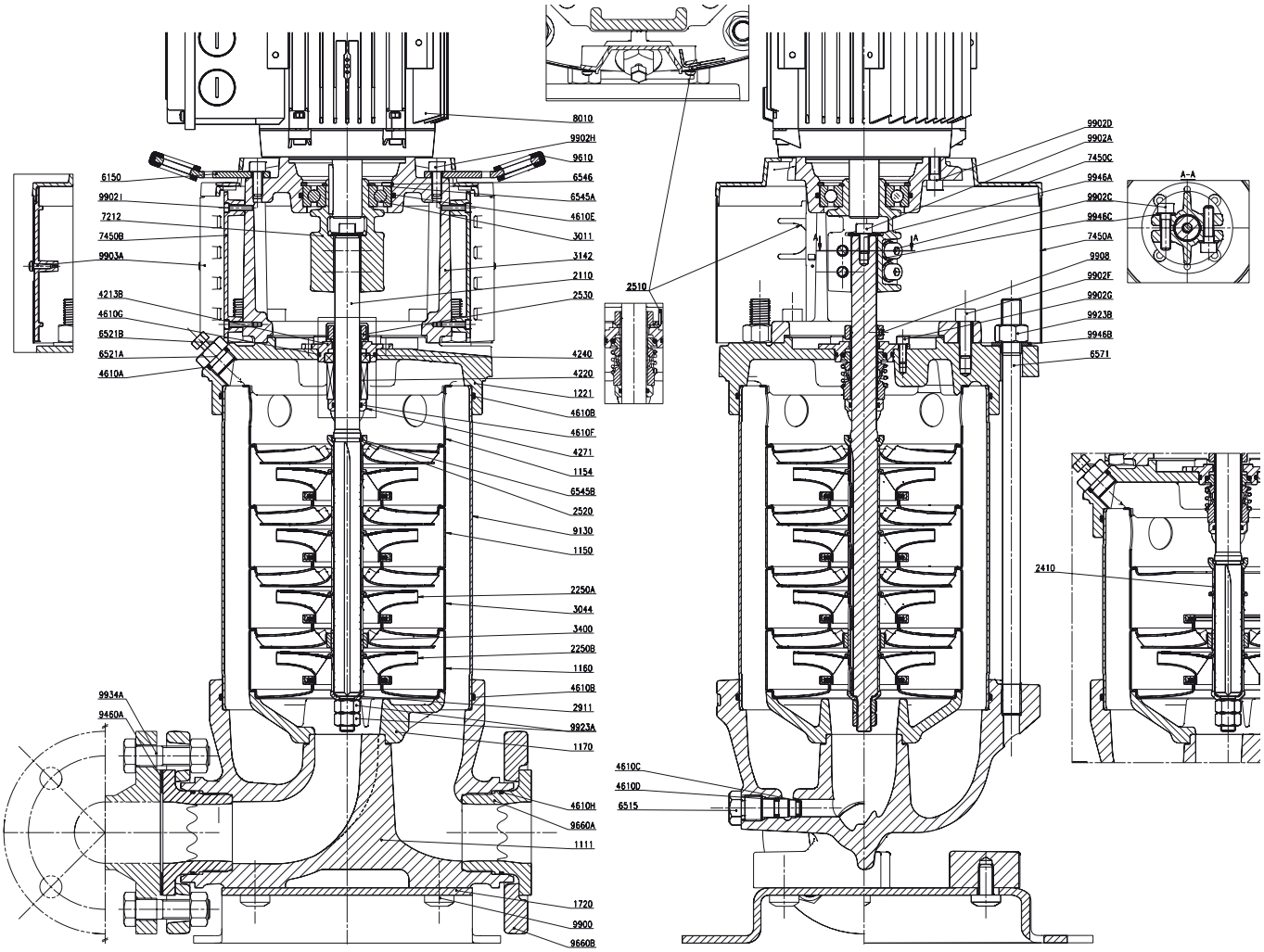

PARTS LIST

1111	Pump housing
1150	Stage housing with interstage crossover
1154	Centring device without interstage crossover
1160	Stage housing without interstage crossover
1170	Hydraulic mount
1221	Upper shroud
1720	Sole plate
2110	Pump shaft
• 2250a	Long impeller
• 2250b	Short impeller
2410	Hub
2510	Mechanical seal adjusting yoke
2520	Support ring
2530	Drive collar
2911	Lower shaft end washer
3011	Lantern ring ball bearing
3044	Stage housing with intermediate bearing and interstage crossover
3142	Lantern ring
• 3400	Shaft sleeve
• 4220+4240	Standard mechanical seal
4271	Sleeve underneath seal
• 4610a	Bleeder plug gasket
• 4610b	O-ring for pipe sleeve
• 4610c	Drain and priming plug gasket
• 4610d	Drain and priming plug gasket
• 4610e	Bearing gasket
4610f	O-ring for sleeve underneath seal
4610g	O-ring for seal disc pad holder
4610h	O-ring for gasket surface
6150	Handling plate
6515	Drain and priming plug
6521	Filler - bleeder plug
6545a	Shaft circlip
6545b	1/2 snap ring
6546	Circlip
6548	Shaft snap ring
6571	Assembly stud bolt
7212	Coupling
7450a	Coupling guard plate
7450b	Plastic mount
7450c	Upper protective cover
• 8010	Flanged motor
9130	External sealing pipe sleeve
9460a	Flat backflange gasket
9610	Lifting ring protector
9660a	Screw-on gasket surface
9660b	Mobile flange
9900	Sole plate/housing attachment screw
9902a	Upper shaft end screw
9902c	Coupling screw
9902d	Motor attachment screw
9902f	Lantern ring/shroud attachment screw
9902g	Cartridge attachment screw
9902i	Plastic mount screw
9903	Protective screw
9908	Collar attachment screw
9923a	Lower shaft end nut
9923b	Assembly stud bolt nut
9923c	Motor attachment screw
9934a	Backflange bolt
9946a	Flat washer
9946b	Contact ring
9946c	Narrow contact ring

• Recommended spare parts

NEXIS V22/36/52

SECTIONAL DIAGRAM - NEXIS-V 36

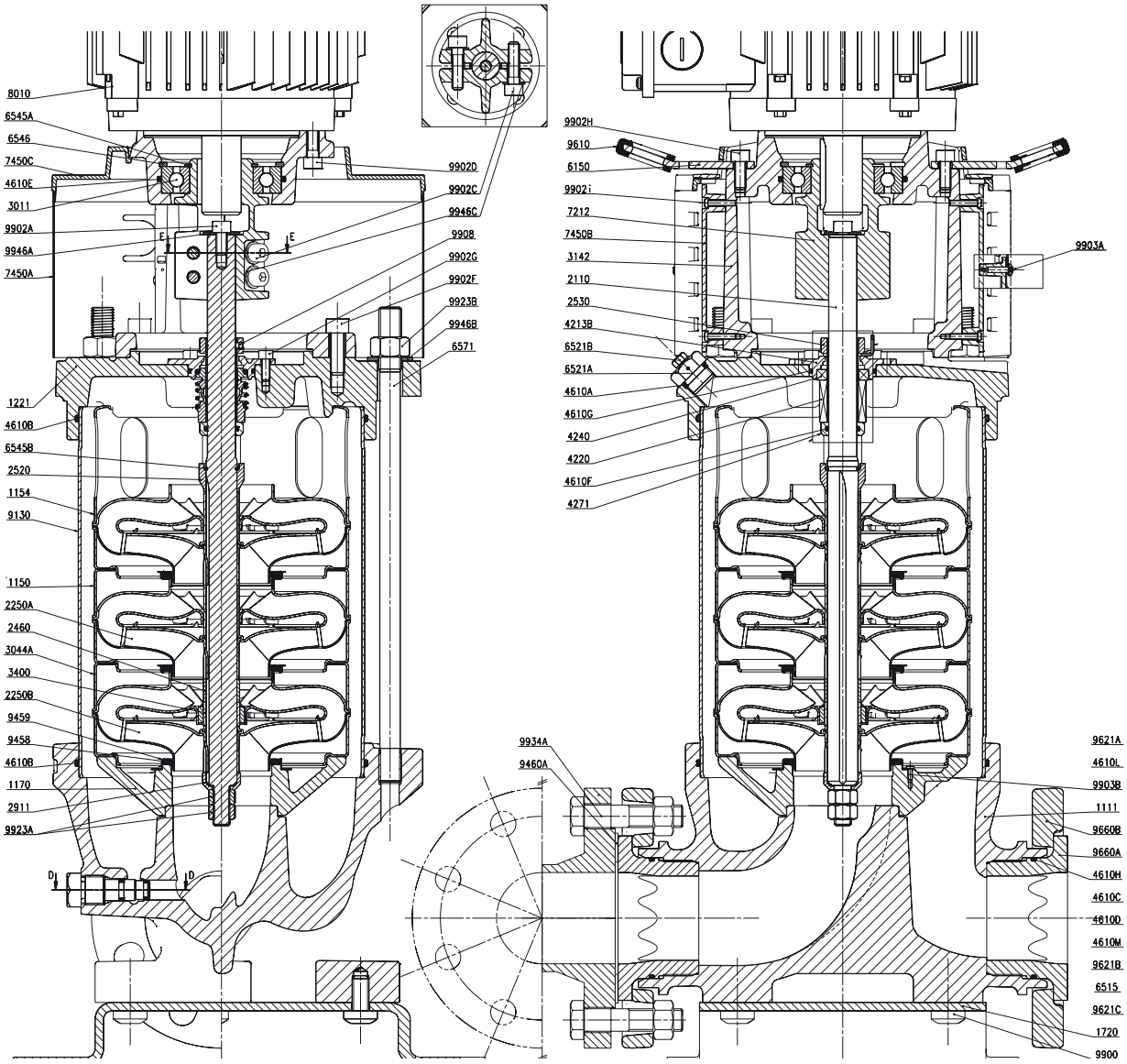

PARTS LIST

1111	Pump housing
1150	Stage housing with interstage crossover
1154	Centring device without interstage crossover
1160	Stage housing without interstage crossover
1170	Hydraulic mount
1221	Upper shroud
1720	Sole plate
2110	Pump shaft
• 2250a	Long impeller
• 2250b	Short impeller
2410	Hub
2510	Mechanical seal adjusting yoke
2520	Support ring
2530	Drive collar
2911	Lower shaft end washer
3011	Lantern ring ball bearing
3044	Stage housing with intermediate bearing and interstage crossover
3142	Lantern ring
• 3400	Shaft sleeve
• 4220+4240	Standard mechanical seal
4271	Sleeve underneath seal
• 4610a	Bleeder plug gasket
• 4610b	O-ring for pipe sleeve
• 4610c	Drain and priming plug gasket
• 4610d	Drain and priming plug gasket
• 4610e	Bearing gasket
4610f	O-ring for sleeve underneath seal
4610g	O-ring for seal disc pad holder
4610h	O-ring for gasket surface
6150	Handling plate
6515	Drain and priming plug
6521	Filler - bleeder plug
6545a	Shaft circlip
6545b	1/2 snap ring
6546	Circlip
6548	Shaft snap ring
6571	Assembly stud bolt
7212	Coupling
7450a	Coupling guard plate
7450b	Plastic mount
7450c	Upper protective cover
• 8010	Flanged motor
9130	External sealing pipe sleeve
9460a	Flat backflange gasket
9610	Lifting ring protector
9660a	Screw-on gasket surface
9660b	Mobile flange
9900	Sole plate/housing attachment screw
9902a	Upper shaft end screw
9902c	Coupling screw
9902d	Motor attachment screw
9902f	Lantern ring/shroud attachment screw
9902g	Cartridge attachment screw
9902i	Plastic mount screw
9903	Protective screw
9908	Collar attachment screw
9923a	Lower shaft end nut
9923b	Assembly stud bolt nut
9923c	Motor attachment screw
9934a	Backflange bolt
9946a	Flat washer
9946b	Contact ring
9946c	Narrow contact ring

• Recommended spare parts

SECTIONAL DIAGRAM - NEXIS-V 52

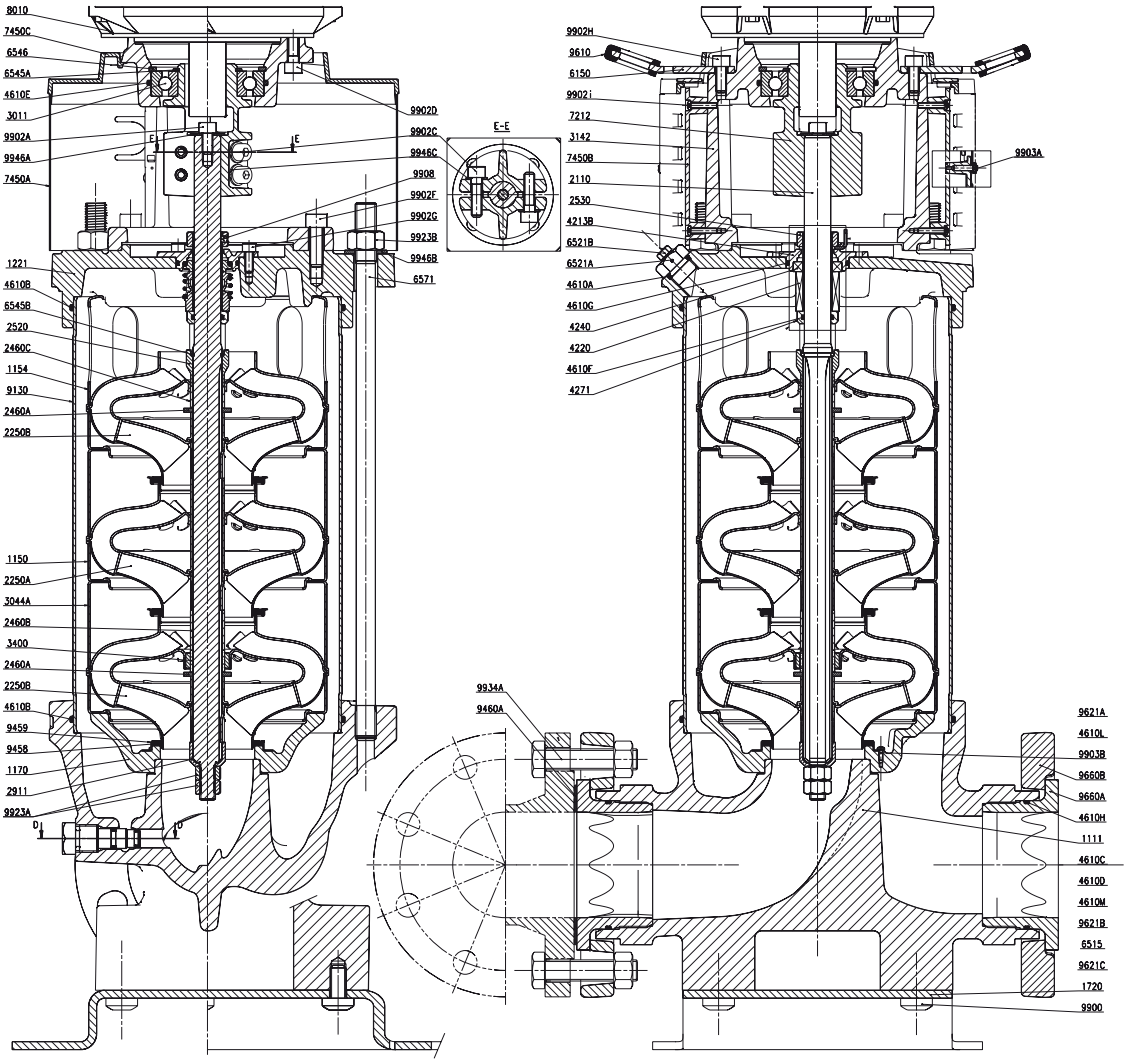

PARTS LIST

1111	Pump housing
1150	Stage housing with interstage crossover
1154	Centring device without interstage crossover
1160	Stage housing without interstage crossover
1170	Hydraulic mount
1221	Upper shroud
1720	Sole plate
2110	Pump shaft
• 2250a	Long impeller
• 2250b	Short impeller
2410	Hub
2510	Mechanical seal adjusting yoke
2520	Support ring
2530	Drive collar
2911	Lower shaft end washer
3011	Lantern ring ball bearing
3044	Stage housing with intermediate bearing and interstage crossover
3142	Lantern ring
• 3400	Shaft sleeve
• 4220+4240	Standard mechanical seal
4271	Sleeve underneath seal
• 4610a	Bleeder plug gasket
• 4610b	O-ring for pipe sleeve
• 4610c	Drain and priming plug gasket
• 4610d	Drain and priming plug gasket
• 4610e	Bearing gasket
4610f	O-ring for sleeve underneath seal
4610g	O-ring for seal disc pad holder
4610h	O-ring for gasket surface
6150	Handling plate
6515	Drain and priming plug
6521	Filler - bleeder plug
6545a	Shaft circlip
6545b	1/2 snap ring
6546	Circlip
6548	Shaft snap ring
6571	Assembly stud bolt
7212	Coupling
7450a	Coupling guard plate
7450b	Plastic mount
7450c	Upper protective cover
• 8010	Flanged motor
9130	External sealing pipe sleeve
9460a	Flat backflange gasket
9610	Lifting ring protector
9660a	Screw-on gasket surface
9660b	Mobile flange
9900	Sole plate/housing attachment screw
9902a	Upper shaft end screw
9902c	Coupling screw
9902d	Motor attachment screw
9902f	Lantern ring/shroud attachment screw
9902g	Cartridge attachment screw
9902i	Plastic mount screw
9903	Protective screw
9908	Collar attachment screw
9923a	Lower shaft end nut
9923b	Assembly stud bolt nut
9923c	Motor attachment screw
9934a	Backflange bolt
9946a	Flat washer
9946b	Contact ring
9946c	Narrow contact ring

• Recommended spare parts

NEXIS V22/36/52

SECTIONAL DIAGRAM - LANTERN RING WITH SPACER AND CARTRIDGE

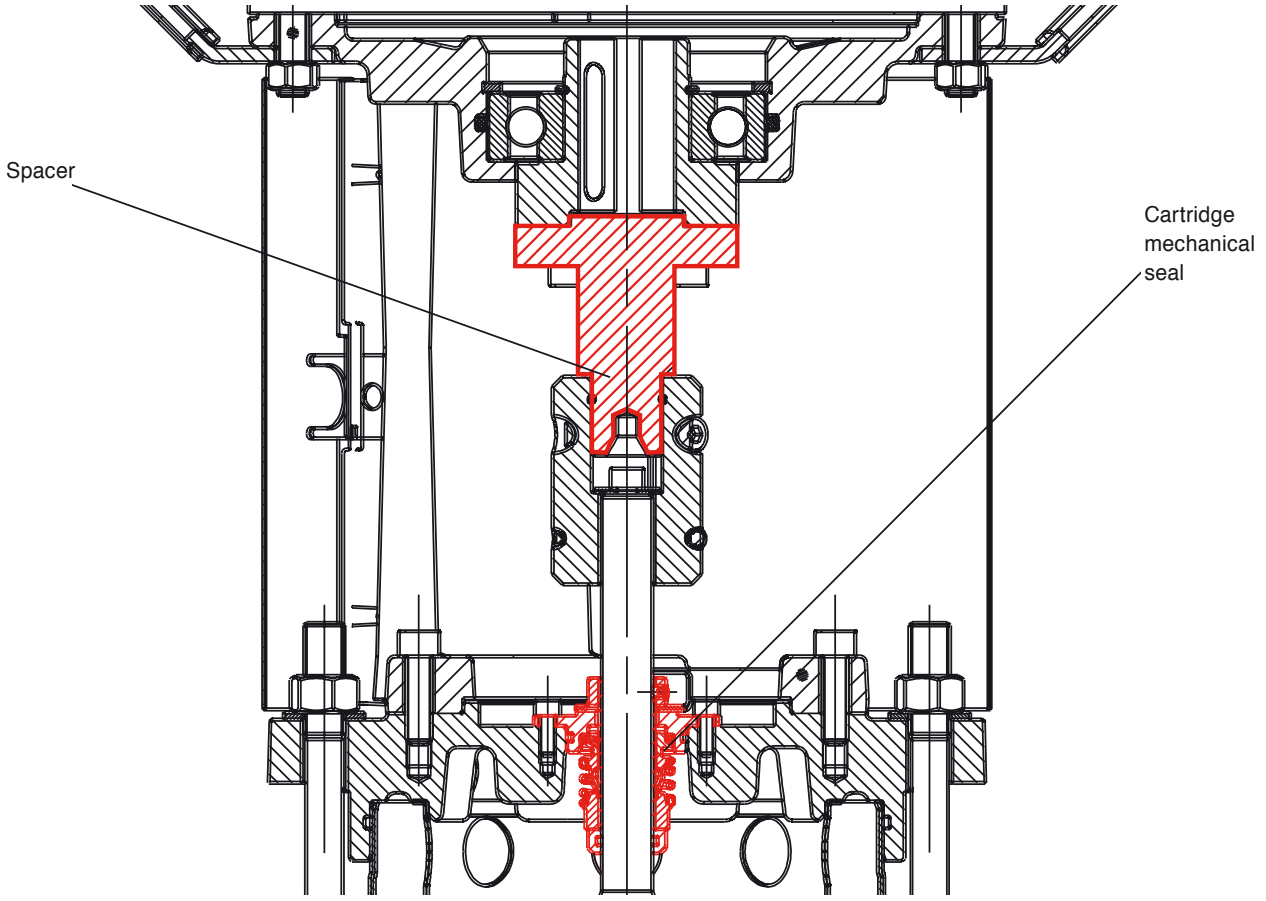

- **«Spacer» function**
  For motors with power of 7.5 kW or above, Nexis pumps are equipped with a removable part mounted between the motor shaft, the coupling and the hydraulic shaft. This part, called a «spacer», ensures that there is sufficient room to remove the mechanical seal without having to remove the motor.

.

- **Cartridge mechanical seal**
  Cartridge mechanical seal In addition, the mechanical seals are built into a compact and robust cartridge which allows for quick, easy and tool-free maintenance (see details on next page)

- **Product plus points**
  The combination of a spacer and cartridge mechanical seal divides maintenance time by three and separates maintenance from any intervention on the hydraulic part

NEXIS V22/36/52

PRINCIPLE OF THE CARTRIDGE SEAL

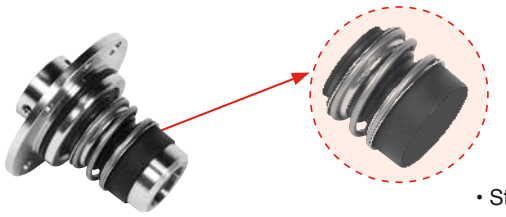

• Salmson cartridge mechanical seal

• Standard seal

Seal characteristics

As standard
- SiC/C or CW/C seal
- EPDM gasket

Optional
- SiC/SiC seal and/or
- Viton gasket

Benefits

- Removable cartridge for replacement of the worn part only
- Easy extraction of the seal (housings provided for extraction screws)
- Adjustment shim placed in the lantern ring .







XCARE: INTEGRAL PUMP PROTECTION (OPTION)



• Nexis-V2206 equipped with integral X-Care protection option



Transmission of signals for communication by the Building Management System/ Centralised Technical Management System and targeted pump control:

• Built-in protection against dry running
• Built-in monitoring of the pump:
  - Rotation
  - Pressure
  - Ambient temperature
  - Number of hours of operation
  - Number of stops & starts
• Interfaces
  - IR
  - CAN

NEXIS V22/36/52

HYDRAULIC PERFORMANCES AT REAL SPEED (AROUND 2900 RPM) - NEXIS V22

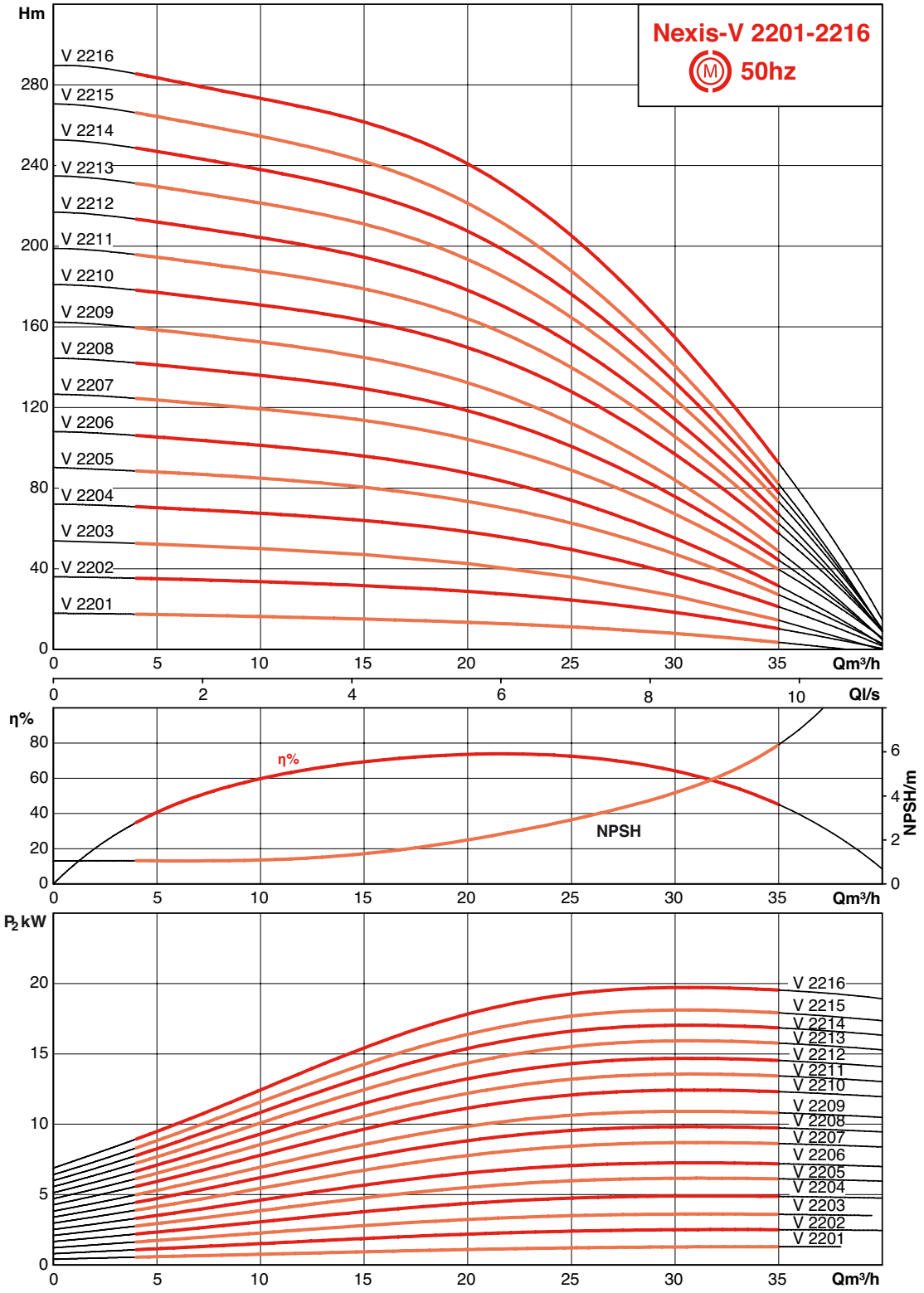

HYDRAULIC PERFORMANCES AT REAL SPEED (AROUND 2900 RPM) - NEXIS V36

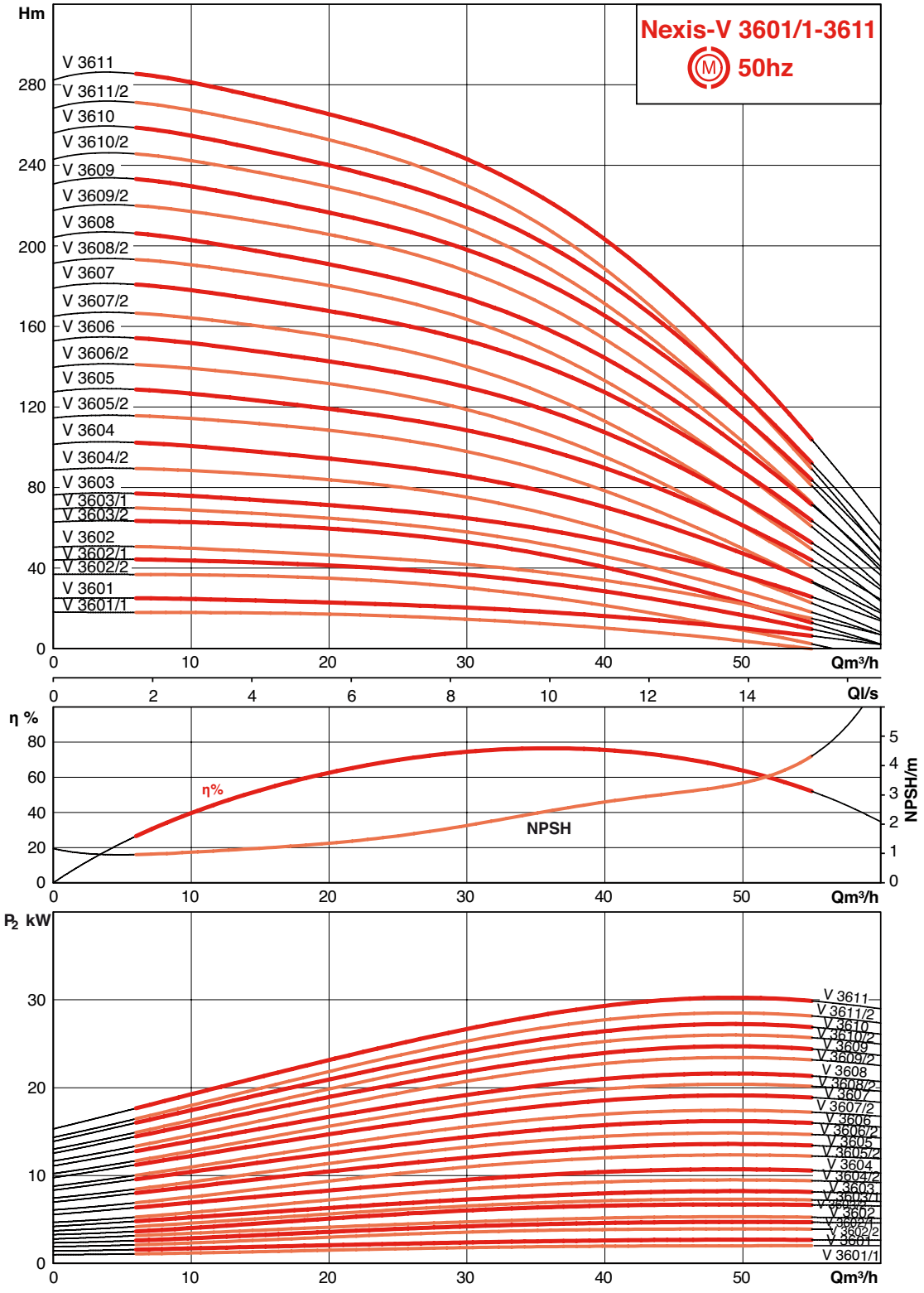

NEXIS V22/36/52

HYDRAULIC PERFORMANCES AT REAL SPEED (AROUND 2900 RPM) - NEXIS V52

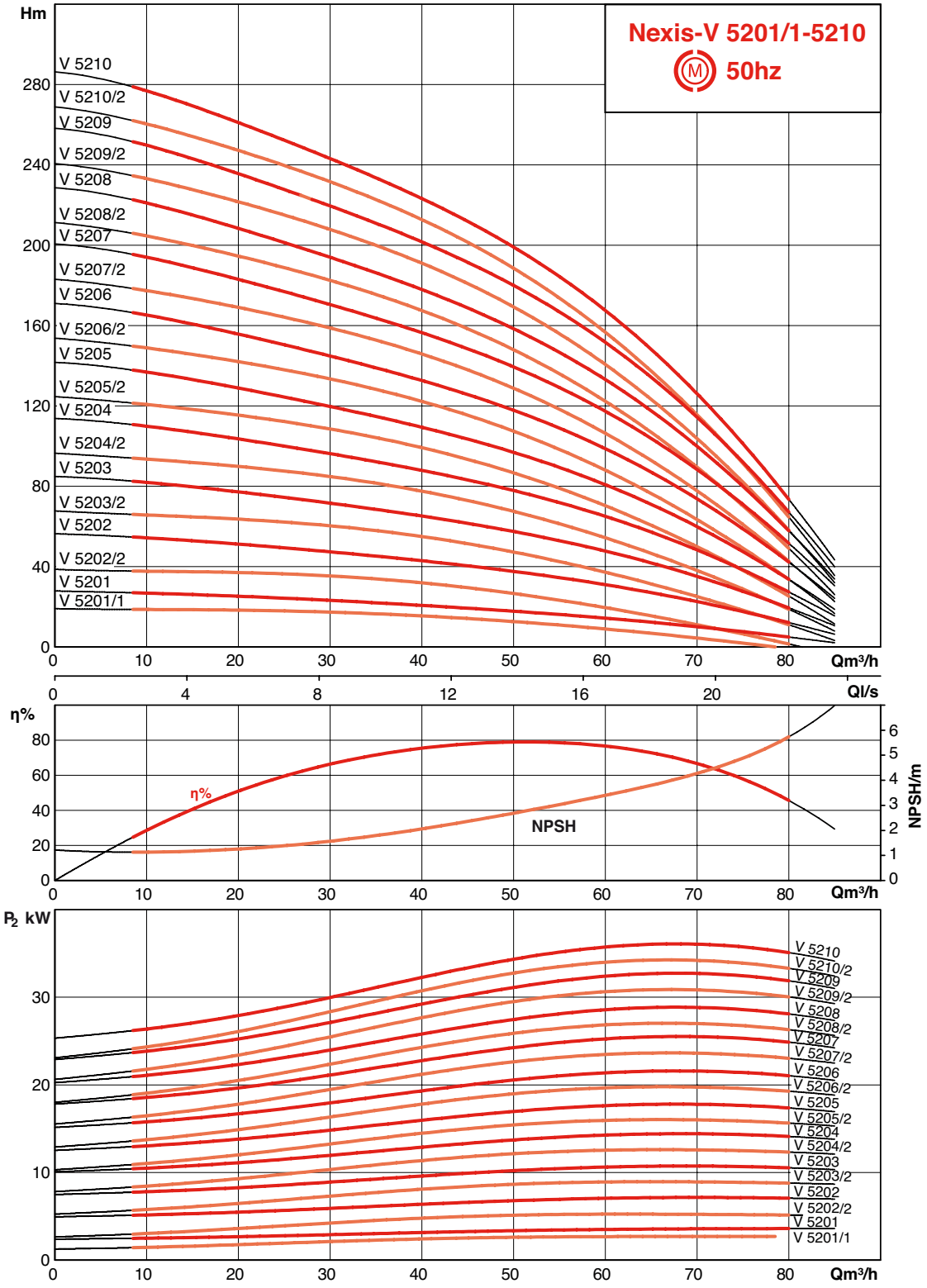

ELECTRICAL AND DIMENSIONAL SPECIFICATIONS NEXIS V2200

• PN16/25/40 - 2 Pole - DN 50

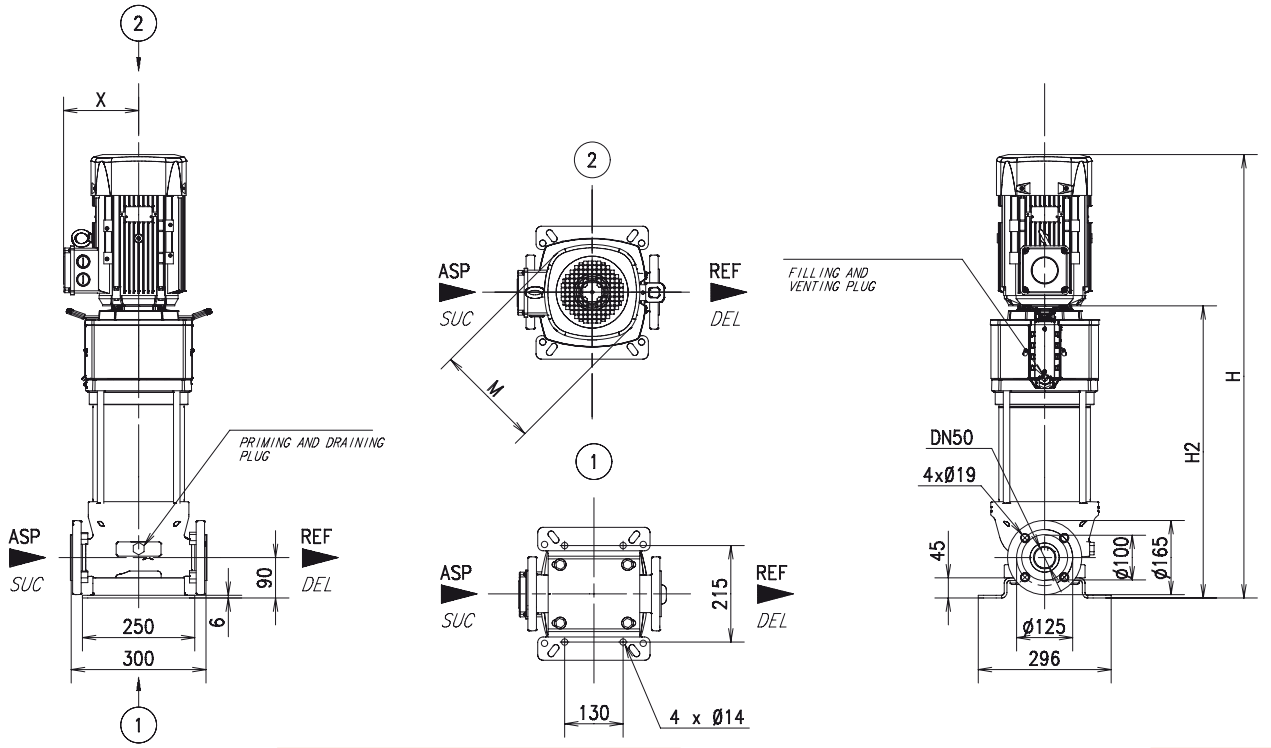

ORDER REFERENCE	MOTOR							PUMP					MASS (kg)	
	P2	Efficiency according to load (%)			Max. current (A)		Noise level	P max	H	H2	ØM	X	without packaging	with packaging
	kW	4/4	3/4	2/4	230 V	400V	dB(A)	bar	mm	mm	mm	mm		
NEXIS V2201-OGE/K/400-50	1.5	81.3	81.3	80	5.7	3,3	58	16	820	541	184	149	60	74
NEXIS V2201-OXV/K/400-50	1.5	81.3	81.3	80	5.7	3,3	58	16	820	541	184	149	60	74
NEXIS V2202-OGE/K/400-50	3	84.6	85	82.5	11.6	6,7	63	16	868	551	194	170	74	88
NEXIS V2202-OXV/K/400-50	3	84.6	85	82.5	11.6	6,7	63	16	868	551	194	170	74	88
NEXIS V2202-ODE/S/400-50	3	84.6	85	82.5	11.6	6,7	63	16	750	433	194	170	63	77
NEXIS V2203-OGE/K/400-50	4	85.8	85.8	85	13.5	7,8	68	16	950	601	218	175	81	100
NEXIS V2203-OXV/K/400-50	4	85.8	85.8	85	13.5	7,8	68	16	950	601	218	175	81	100
NEXIS V2203-ODE/S/400-50	4	85.8	85.8	85	13.5	7,8	68	16	832	483	218	175	76	90
NEXIS V2204-FGE/K/400-50	5.5	88.1	86.9	85.2		10,7	69	25	978	651	232	160	87	109
NEXIS V2204-FXV/K/400-50	5.5	88.1	86.9	85.2		10,7	69	25	978	651	232	160	87	109
NEXIS V2204-OGE/K/400-50	5.5	88.1	86.9	85.2		10,7	69	16	978	651	232	160	87	109
NEXIS V2204-OXV/K/400-50	5.5	88.1	86.9	85.2		10,7	69	16	978	651	232	160	87	109
NEXIS V2204-ODE/S/400-50	5.5	88.1	86.9	85.2		10,7	69	16	861	533	232	160	81	100
NEXIS V2205-FGE/K/400-50	7.5	89.5	89.9	88.5		14	69	25	1212	817	220	160	114	136
NEXIS V2205-FXV/K/400-50	7.5	89.5	89.9	88.5		14	69	25	1212	817	220	160	114	136
NEXIS V2205-OGE/K/400-50	7.5	89.5	89.9	88.5		14	69	16	1212	817	220	160	114	136
NEXIS V2205-OXV/K/400-50	7.5	89.5	89.9	88.5		14	69	16	1212	817	220	160	114	136
NEXIS V2206-FGE/K/400-50	7.5	89.5	89.9	88.5		14	69	25	1262	867	220	160	116	138
NEXIS V2206-FXV/K/400-50	7.5	89.5	89.9	88.5		14	69	25	1262	867	220	160	116	138
NEXIS V2206-OGE/K/400-50	7.5	89.5	89.9	88.5		14	69	16	1262	867	220	160	116	138
NEXIS V2206-OXV/K/400-50	7.5	89.5	89.9	88.5		14	69	16	1262	867	220	160	116	138
NEXIS V2207-FGE/K/400-50	9	88.8	88.4	86.6		16,3	70	25	1312	917	279	182	123	145

NEXIS V22/36/52

ELECTRICAL AND DIMENSIONAL SPECIFICATIONS NEXIS-V2200

• PN16/25/40 - 2 Pole - DN 50

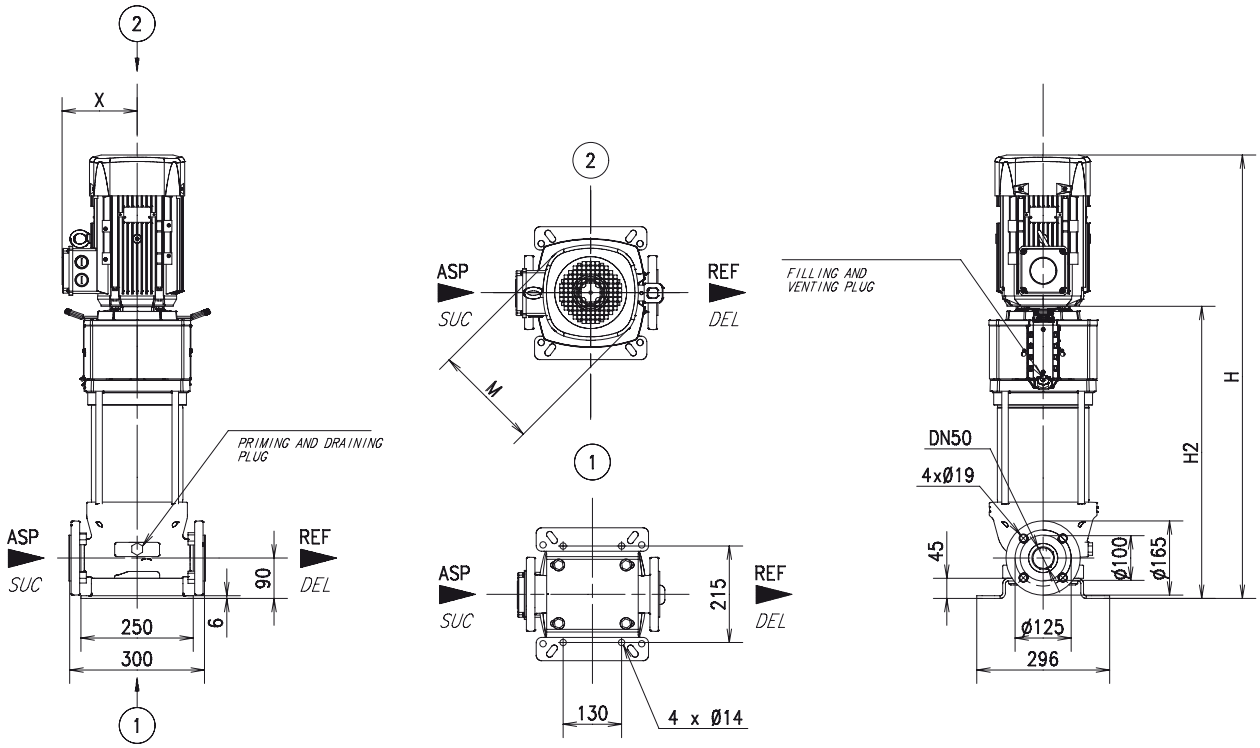

ORDER REFERENCE	MOTOR							PUMP					MASS (kg)	
	P2	Efficiency according to load (%)			Max. current (A)		Noise level	P max	H	H2	ØM	X	without packaging	with packaging
	kW	4/4	3/4	2/4	230 V	400V	dB(A)	bar	mm	mm	mm	mm		
NEXIS V2207-FXV/K/400-50	9	88.8	88.4	86.6		16,3	70	25	1312	917	279	182	123	145
NEXIS V2207-OGE/K/400-50	9	88.8	88.4	86.6		16,3	70	16	1312	917	279	182	123	145
NEXIS V2207-OXV/K/400-50	9	88.8	88.4	86.6		16,3	70	16	1312	917	279	182	123	145
NEXIS V2208-FGE/K/400-50	11	89.4	89.3	87.5		19,4	71	25	1473	997	323	200	156	206
NEXIS V2208-FXV/K/400-50	11	89.4	89.3	87.5		19,4	71	25	1473	997	323	200	156	206
NEXIS V2208-OGE/K/400-50	11	89.4	89.3	87.5		19,4	71	16	1473	997	323	200	156	206
NEXIS V2208-OXV/K/400-50	11	89.4	89.3	87.5		19,4	71	16	1473	997	323	200	156	206
NEXIS V2209-FGE/K/400-50	11	89.4	89.3	87.5		19,4	71	25	1523	1047	323	200	158	208
NEXIS V2209-FXV/K/400-50	11	89.4	89.3	87.5		19,4	71	25	1523	1047	323	200	158	208
NEXIS V2210-FGE/K/400-50	15	90.3	90.2	88.4		25,7	71	25	1573	1097	323	200	171	221
NEXIS V2210-FXV/K/400-50	15	90.3	90.2	88.4		25,7	71	25	1573	1097	323	200	171	221
NEXIS V2211-FGE/K/400-50	15	90.3	90.2	88.4		25,7	71	25	1623	1147	323	200	173	223
NEXIS V2211-FXV/K/400-50	15	90.3	90.2	88.4		25,7	71	25	1623	1147	323	200	173	223
NEXIS V2212-FGE/K/400-50	15	90.3	90.2	88.4		25,7	71	25	1673	1197	323	200	175	225
NEXIS V2212-FXV/K/400-50	15	90.3	90.2	88.4		25,7	71	25	1673	1197	323	200	175	225
NEXIS V2213-FGE/K/400-50	18.5	90.9	90.8	89		31,4	71	25	1723	1247	323	200	187	237
NEXIS V2213-FXV/K/400-50	18.5	90.9	90.8	89		31,4	71	25	1723	1247	323	200	187	237
NEXIS V2214-TGE/K/400-50	18.5	90.9	90.8	89		31,4	71	30	1773	1297	323	200	191	241
NEXIS V2214-TXV/K/400-50	18.5	90.9	90.8	89		31,4	71	30	1773	1297	323	200	191	241
NEXIS V2215-TGE/K/400-50	18.5	90.9	90.8	89		31,4	71	30	1823	1347	323	200	194	244
NEXIS V2215-TXV/K/400-50	18.5	90.9	90.8	89		31,4	71	30	1823	1347	323	200	194	244
NEXIS V2216-TGE/K/400-50	22	91.3	91.9	91		39,2		30	1872	1397	323	200	221	271
NEXIS V2216-TXV/K/400-50	22	91.3	91.9	91		39,2		30	1872	1397	323	200	221	271

ELECTRICAL AND DIMENSIONAL SPECIFICATIONS NEXIS-V2200 MONOBLOC

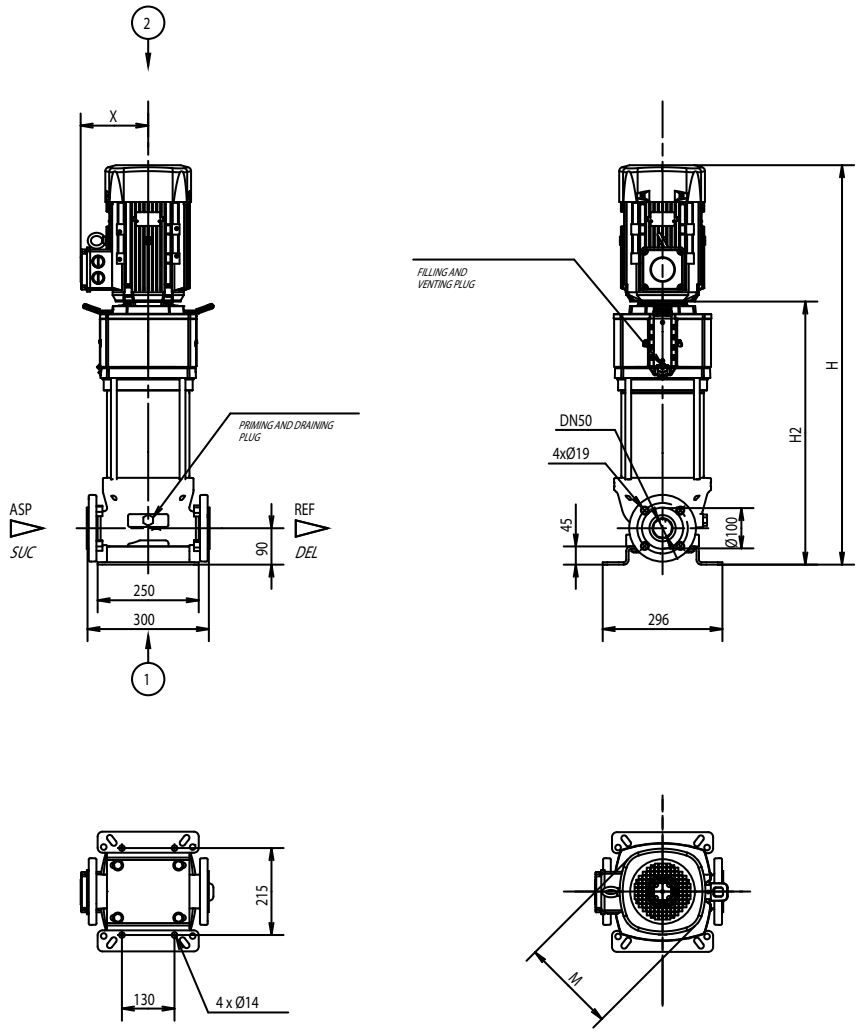

ORDER REFERENCE	MOTOR							PUMP					MASS (kg)	
	P2	Efficiency according to load (%)			Max. current (A)		Noise level	P max	H	H2	ØM	X	without packaging	with packaging
	kW	4/4	3/4	2/4	230 V	400V	dB(A)	bar	mm	mm	mm	mm		
NEXIS V2202-ODE/S/400-50	3	84.6	85	82.5	11.6	6,7	63	16	750	433	194	170	63	77
NEXIS V2203-ODE/S/400-50	4	85.8	85.8	85	13.5	7,8	68	16	832	483	218	175	76	90
NEXIS V2204-ODE/S/400-50	5.5	88.1	86.9	85.2		10,7	69	16	861	533	232	160	81	100
NEXIS V2205-ODE/S/400-50-FF240	7.5	89.5	89.9	88.5		14	69	16	998	603	220	160	95	114
NEXIS V2206-ODE/S/400-50-FF240	7.5	89.5	89.9	88.5		14	69	16	1048	653	220	160	96	115
NEXIS V2207-ODE/S/400-50-FF240	9	88.8	88.4	86.6		16,3	70	16	1098	703	279	182	109	131
NEXIS V2208-ODE/S/400-50-FF240	11	89.4	89.3	87.5		20,2	71	16	1148	753	279	182	144	166

NEXIS V22/36/52

ELECTRICAL AND DIMENSIONAL SPECIFICATIONS NEXIS V3600

• PN16/25/40 - 2 Pole - DN 65

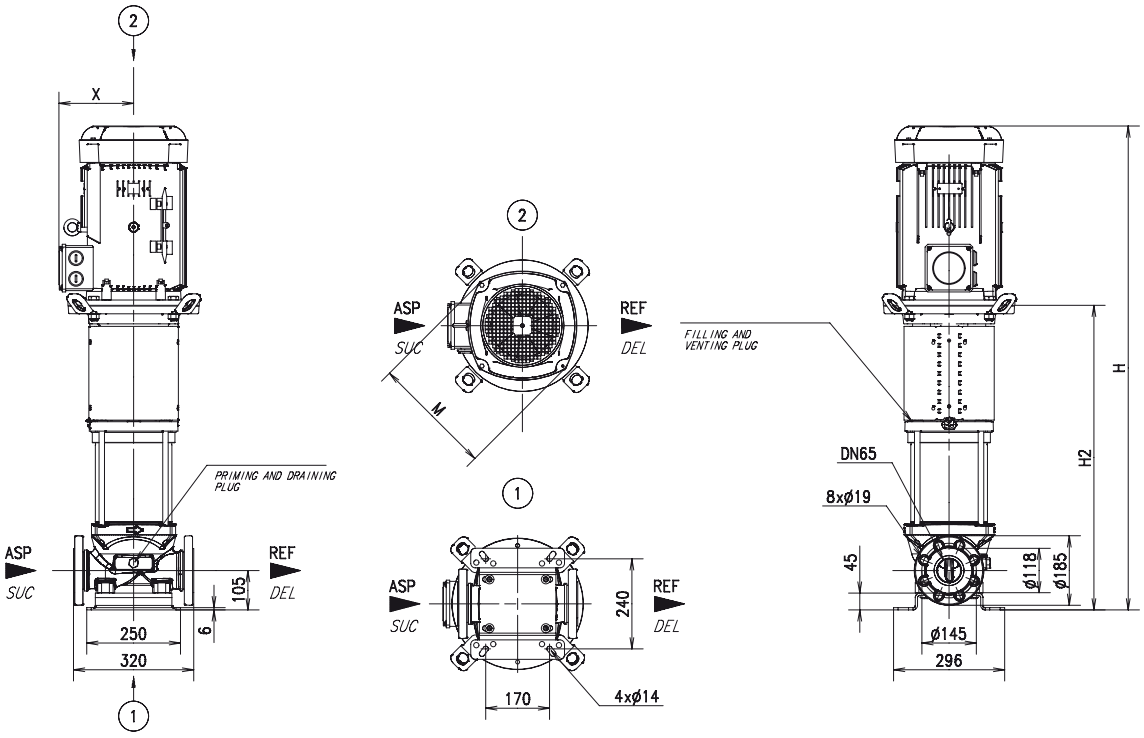

ORDER REFERENCE	MOTOR							PUMP					MASS (kg)	
	P2	Efficiency according to load (%)			Max. current (A)		Noise level	P max	H	H2	ØM	X	without packaging	with packaging
	kW	4/4	3/4	2/4	230 V	400V	dB(A)	bar	mm	mm	mm	mm		
NEXIS V3601/1-OGE/K/400-50	2.2	83.2	83.2	82	8	4,6	62	16	801	522	184	149	71	85
NEXIS V3601/1-OXV/K/400-50	2.2	83.2	83.2	82	8	4,6	62	16	801	522	184	149	71	85
NEXIS V3601-OGE/K/400-50	3	84.6	85	82.5	11.6	6,7	63	16	849	532	194	170	82	96
NEXIS V3601-OXV/K/400-50	3	84.6	85	82.5	11.6	6,7	63	16	849	532	194	170	82	96
NEXIS V3602/1-OGE/K/400-50	5.5	88.1	86.9	85.2		10,7	69	16	926	599	232	160	95	114
NEXIS V3602/1-OXV/K/400-50	5.5	88.1	86.9	85.2		10,7	69	16	926	599	232	160	95	114
NEXIS V3602/2-OGE/K/400-50	4	85.8	85.8	85	13.5	7,8	68	16	948	599	218	175	90	109
NEXIS V3602/2-OXV/K/400-50	4	85.8	85.8	85	13.5	7,8	68	16	948	599	218	175	90	109
NEXIS V3602-OGE/K/400-50	5.5	88.1	86.9	85.2		10,7	69	16	926	599	232	160	95	114
NEXIS V3602-OXV/K/400-50	5.5	88.1	86.9	85.2		10,7	69	16	926	599	232	160	95	114
NEXIS V3603/1-FGE/K/400-50	7.5	89.5	89.9	88.5		14	69	25	1177	782	220	160	125	145
NEXIS V3603/1-FXV/K/400-50	7.5	89.5	89.9	88.5		14	69	25	1177	782	220	160	125	145
NEXIS V3603/1-OGE/K/400-50	7.5	89.5	89.9	88.5		14	69	16	1177	782	220	160	125	145
NEXIS V3603/1-OXV/K/400-50	7.5	89.5	89.9	88.5		14	69	16	1177	782	220	160	125	145
NEXIS V3603/2-FGE/K/400-50	7.5	89.5	89.9	88.5		14	69	25	1177	782	220	160	125	145
NEXIS V3603/2-FXV/K/400-50	7.5	89.5	89.9	88.5		14	69	25	1177	782	220	160	125	145
NEXIS V3603/2-OGE/K/400-50	7.5	89.5	89.9	88.5		14	69	16	1177	782	220	160	125	145
NEXIS V3603/2-OXV/K/400-50	7.5	89.5	89.9	88.5		14	69	16	1177	782	220	160	125	145
NEXIS V3603-FGE/K/400-50	9	88.8	88.4	86.6		16,3	70	25	1177	782	279	182	130	150
NEXIS V3603-FXV/K/400-50	9	88.8	88.4	86.6		16,3	70	25	1177	782	279	182	130	150
NEXIS V3603-OGE/K/400-50	9	88.8	88.4	86.6		16,3	70	16	1177	782	279	182	130	150
NEXIS V3603-OXV/K/400-50	9	88.8	88.4	86.6		16,3	70	16	1177	782	279	182	130	150
NEXIS V3604/2-FGE/K/400-50	11	89.4	89.3	87.5		19,4	71	25	1354	878	323	200	165	185
NEXIS V3604/2-FXV/K/400-50	11	89.4	89.3	87.5		19,4	71	25	1354	878	323	200	165	185
NEXIS V3604/2-OGE/K/400-50	11	89.4	89.3	87.5		19,4	71	16	1354	878	323	200	165	185
NEXIS V3604/2-OXV/K/400-50	11	89.4	89.3	87.5		19,4	71	16	1354	878	323	200	165	185
NEXIS V3604-FGE/K/400-50	11	89.4	89.3	87.5		19,4	71	25	1354	878	323	200	165	185
NEXIS V3604-FXV/K/400-50	11	89.4	89.3	87.5		19,4	71	25	1354	878	323	200	165	185
NEXIS V3604-OGE/K/400-50	11	89.4	89.3	87.5		19,4	71	16	1354	878	323	200	165	185
NEXIS V3604-OXV/K/400-50	11	89.4	89.3	87.5		19,4	71	16	1354	878	323	200	165	185
NEXIS V3605/2-FGE/K/400-50	15	90.3	90.2	88.4		25,7	71	25	1421	945	323	200	185	205
NEXIS V3605/2-FXV/K/400-50	15	90.3	90.2	88.4		25,7	71	25	1421	945	323	200	185	205
NEXIS V3605/2-OGE/K/400-50	15	90.3	90.2	88.4		25,7	71	16	1421	945	323	200	185	205
NEXIS V3605/2-OXV/K/400-50	15	90.3	90.2	88.4		25,7	71	16	1421	945	323	200	185	205

ELECTRICAL AND DIMENSIONAL SPECIFICATIONS NEXIS V3600

• PN16/25/40 - 2 Pole - DN 65

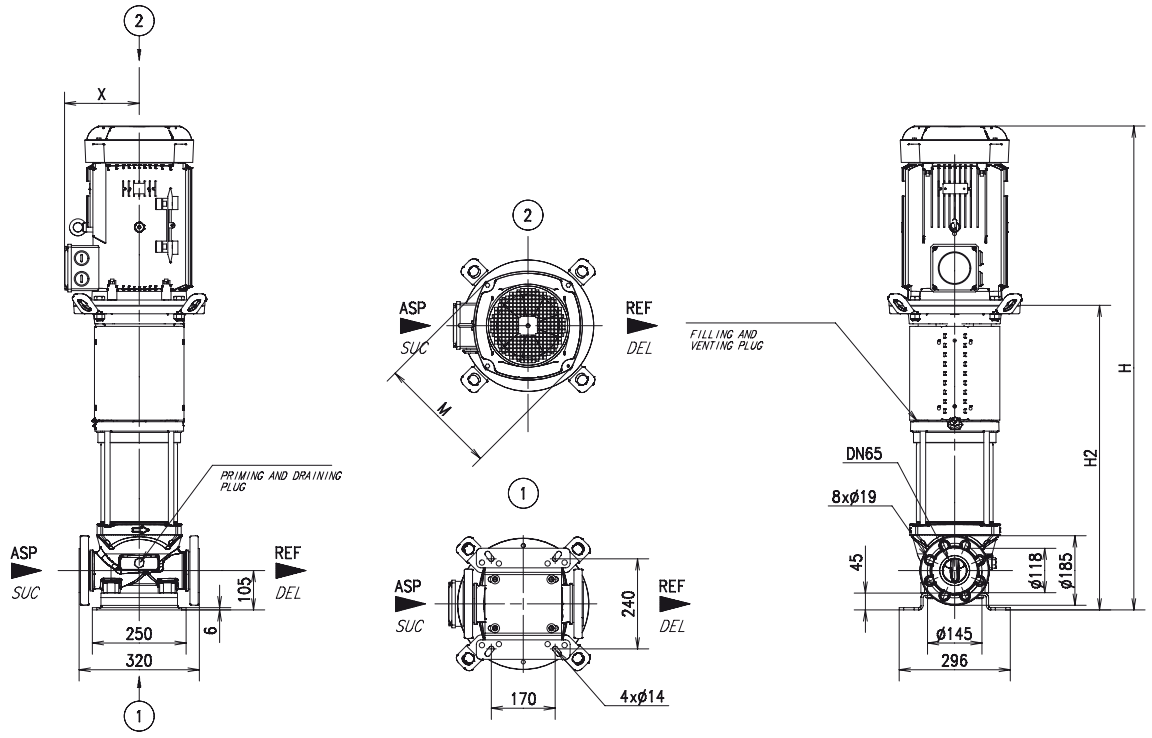

ORDER REFERENCE	MOTOR							PUMP					MASS (kg)	
	P2	Efficiency according to load (%)			Max. current (A)		Noise level	P max	H	H2	ØM	X	without packaging	with packaging
	kW	4/4	3/4	2/4	230 V	400V	dB(A)	bar	mm	mm	mm	mm		
NEXIS V3605-FGE/K/400-50	15	90.3	90.2	88.4		25,7	71	25	1421	945	323	200	185	205
NEXIS V3605-FXV/K/400-50	15	90.3	90.2	88.4		25,7	71	25	1421	945	323	200	185	205
NEXIS V3605-OGE/K/400-50	15	90.3	90.2	88.4		25,7	71	16	1421	945	323	200	185	205
NEXIS V3605-OXV/K/400-50	15	90.3	90.2	88.4		25,7	71	16	1421	945	323	200	185	205
NEXIS V3606/2-FGE/K/400-50	15	90.3	90.2	88.4		25,7	71	25	1488	1012	323	200	189	231
NEXIS V3606/2-FXV/K/400-50	15	90.3	90.2	88.4		25,7	71	25	1488	1012	323	200	189	231
NEXIS V3606/2-OGE/K/400-50	15	90.3	90.2	88.4		25,7	71	16	1488	1012	323	200	189	231
NEXIS V3606/2-OXV/K/400-50	15	90.3	90.2	88.4		25,7	71	16	1488	1012	323	200	189	231
NEXIS V3606-FGE/K/400-50	18.5	90.9	90.8	89		31,4	71	25	1488	1012	323	200	192	234
NEXIS V3606-FXV/K/400-50	18.5	90.9	90.8	89		31,4	71	25	1488	1012	323	200	192	234
NEXIS V3606-OGE/K/400-50	18.5	90.9	90.8	89		31,4	71	16	1488	1012	323	200	192	234
NEXIS V3606-OXV/K/400-50	18.5	90.9	90.8	89		31,4	71	16	1488	1012	323	200	192	234
NEXIS V3607/2-FGE/K/400-50	18.5	90.9	90.8	89		31,4	71	25	1554	1078	323	200	195	237
NEXIS V3607/2-FXV/K/400-50	18.5	90.9	90.8	89		31,4	71	25	1554	1078	323	200	195	237
NEXIS V3607-FGE/K/400-50	22	91.3	91.9	91		39,2		25	1554	1078	323	200	218	268
NEXIS V3607-FXV/K/400-50	22	91.3	91.9	91		39,2		25	1554	1078	323	200	218	268
NEXIS V3608/2-FGE/K/400-50	22	91.3	91.9	91		39,2		25	1621	1145	323	200	221	271
NEXIS V3608/2-FXV/K/400-50	22	91.3	91.9	91		39,2		25	1621	1145	323	200	221	271
NEXIS V3608-FGE/K/400-50	22	91.3	91.9	91		39,2		25	1621	1145	323	200	221	271
NEXIS V3608-FXV/K/400-50	22	91.3	91.9	91		39,2		25	1621	1145	323	200	221	271
NEXIS V3609/2-FGE/K/400-50	30	92	91.8	90.3		55,1	75	25	1767	1212	415	261	267	309
NEXIS V3609/2-FXV/K/400-50	30	92	91.8	90.3		55,1	75	25	1767	1212	415	261	267	309
NEXIS V3609-FGE/K/400-50	30	92	91.8	90.3		55,1	75	25	1767	1212	415	261	267	309
NEXIS V3609-FXV/K/400-50	30	92	91.8	90.3		55,1	75	25	1767	1212	415	261	267	309
NEXIS V3610-TGE/K/400-50	30	92	91.8	90.3		55,1	75	30	1833	1278	415	261	272	314
NEXIS V3610-TXV/K/400-50	30	92	91.8	90.3		55,1	75	30	1833	1278	415	261	272	314
NEXIS V3611/2-TGE/K/400-50	30	92	91.8	90.3		55,1	75	30	1900	1345	415	261	276	330
NEXIS V3611/2-TXV/K/400-50	30	92	91.8	90.3		55,1	75	30	1900	1345	415	261	276	330
NEXIS V3611-TGE/K/400-50	37	92.5	91.9	90.1		70	75	30	1900	1345	415	261	296	350
NEXIS V3611-TXV/K/400-50	37	92.5	91.9	90.1		70	75	30	1900	1345	415	261	296	350

NEXIS V22/36/52

ELECTRICAL AND DIMENSIONAL SPECIFICATIONS NEXIS V3600 MONOBLOC

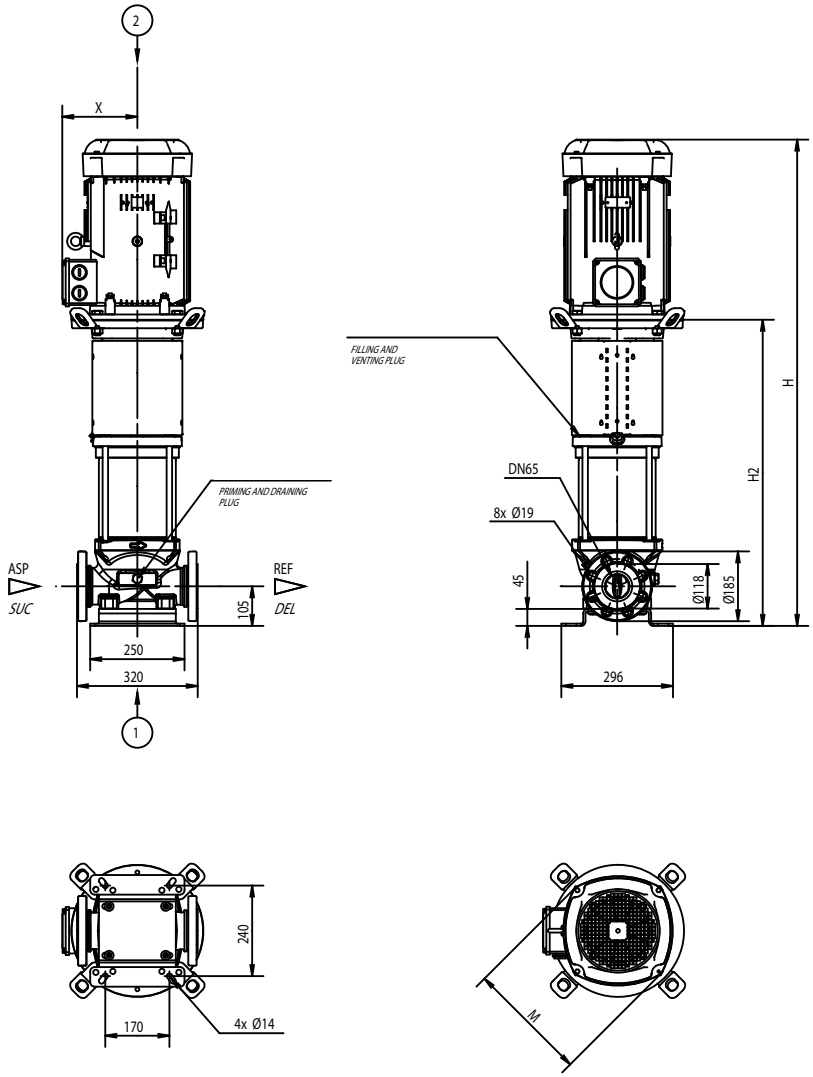

ORDER REFERENCE	MOTOR							PUMP					MASS (kg)	
	P2	Efficiency according to load (%)			Max. current (A)		Noise level	P max	H	H2	ØM	X	without packaging	with packaging
	kW	4/4	3/4	2/4	230 V	400V	dB(A)	bar	mm	mm	mm	mm		
NEXIS V3602/2-ODE/S/400-50	4	85.8	85.8	85	13.5	7,8	68	16	835	486	218	175	81	95
NEXIS V3602-ODE/S/400-50	5.5	88.1	86.9	85.2		10,7	69	16	814	486	232	160	84	98
NEXIS V3603/1-ODE/S/400-50-FF240	7.5	89.5	89.9	88.5		14	69	16	968	573	220	160	99	118
NEXIS V3603-ODE/S/400-50-FF240	9	88.8	88.4	86.6		16,3	70	16	968	573	279	182	109	128
NEXIS V3604/2-ODE/S/400-50-FF240	11	89.4	89.3	87.5		20,2	71	16	1034	639	279	182	146	165
NEXIS V3604-ODE/S/400-50-FF240	11	89.4	89.3	87.5		20,2	71	16	1034	639	279	182	146	165
NEXIS V3605/2-ODE/KS/400-50	15	90.3	90.2	88.4		25,7	71	16	1361	885	323	200	178	200
NEXIS V3605-ODE/KS/400-50	15	90.3	90.2	88.4		25,7	71	16	1361	885	323	200	178	200
NEXIS V3606/2-ODE/KS/400-50	15	90.3	90.2	88.4		25,7	71	16	148	952	323	200	181	203
NEXIS V3606-ODE/KS/400-50	18.5	90.9	90.8	89		31,4	71	16	1428	952	323	200	194	216

ELECTRICAL AND DIMENSIONAL SPECIFICATIONS NEXIS V5200

• PN16/25/40 - 2 Pole - DN 80

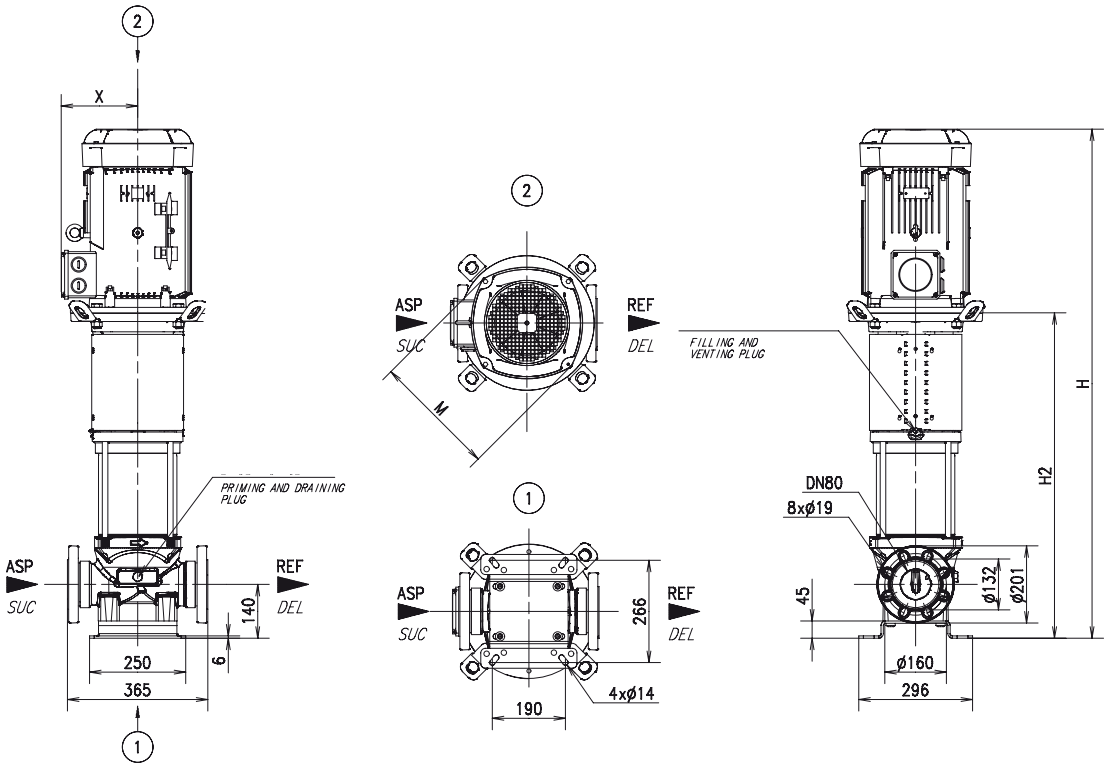

ORDER REFERENCE	MOTOR							PUMP					MASS (kg)	
	P2	Efficiency according to load (%)			Max. current (A)		Noise level	P max	H	H2	ØM	X	without packaging	with packaging
	kW	4/4	3/4	2/4	230 V	400V	dB(A)	bar	mm	mm	mm	mm		
NEXIS V5201/1-OGE/K/400-50	3	84.6	85	82.5	11.6	6,7	63	16	884	567	194	170	94	108
NEXIS V5201/1-OXV/K/400-50	3	84.6	85	82.5	11.6	6,7	63	16	884	567	194	170	94	108
NEXIS V5201-OGE/K/400-50	4	85.8	85.8	85	13.5	7,8	68	16	916	567	218	175	98	112
NEXIS V5201-OXV/K/400-50	4	85.8	85.8	85	13.5	7,8	68	16	916	567	218	175	98	112
NEXIS V5202/2-OGE/K/400-50	5.5	88.1	86.9	85.2		10,7	69	16	995	667	232	160	108	130
NEXIS V5202/2-OXV/K/400-50	5.5	88.1	86.9	85.2		10,7	69	16	995	667	232	160	108	130
NEXIS V5202-OGE/K/400-50	7.5	89.5	89.9	88.5		14	69	16	1178	783	220	160	134	155
NEXIS V5202-OXV/K/400-50	7.5	89.5	89.9	88.5		14	69	16	1178	783	220	160	134	156
NEXIS V5203/2-FGE/K/400-50	11	89.4	89.3	87.5		19,4	71	25	1389	913	323	200	176	198
NEXIS V5203/2-FXV/K/400-50	11	89.4	89.3	87.5		19,4	71	25	1389	913	323	200	176	198
NEXIS V5203/2-OGE/K/400-50	11	89.4	89.3	87.5		19,4	71	16	1389	913	323	200	176	198
NEXIS V5203/2-OXV/K/400-50	11	89.4	89.3	87.5		19,4	71	16	1389	913	323	200	176	198
NEXIS V5203-FGE/K/400-50	11	89.4	89.3	87.5		19,4	71	25	1389	913	323	200	176	198
NEXIS V5203-FXV/K/400-50	11	89.4	89.3	87.5		19,4	71	25	1389	913	323	200	176	198
NEXIS V5203-OGE/K/400-50	11	89.4	89.3	87.5		19,4	71	16	1389	913	323	200	176	198
NEXIS V5203-OXV/K/400-50	11	89.4	89.3	87.5		19,4	71	16	1389	913	323	200	176	198
NEXIS V5204/2-FGE/K/400-50	15	90.3	90.2	88.4		25,7	71	25	1489	1013	323	200	197	245
NEXIS V5204/2-FXV/K/400-50	15	90.3	90.2	88.4		25,7	71	25	1489	1013	323	200	197	245
NEXIS V5204/2-OGE/K/400-50	15	90.3	90.2	88.4		25,7	71	16	1489	1013	323	200	197	245
NEXIS V5204/2-OXV/K/400-50	15	90.3	90.2	88.4		25,7	71	16	1489	1013	323	200	197	245
NEXIS V5204-FGE/K/400-50	15	90.3	90.2	88.4		25,7	71	25	1489	1013	323	200	197	245
NEXIS V5204-FXV/K/400-50	15	90.3	90.2	88.4		25,7	71	25	1489	1013	323	200	197	245
NEXIS V5204-OGE/K/400-50	15	90.3	90.2	88.4		25,7	71	16	1489	1013	323	200	197	245
NEXIS V5204-OXV/K/400-50	15	90.3	90.2	88.4		25,7	71	16	1489	1013	323	200	197	245
NEXIS V5205/2-FGE/K/400-50	18.5	90.9	90.8	89		31,4	71	25	1589	1113	323	200	207	255
NEXIS V5205/2-FXV/K/400-50	18.5	90.9	90.8	89		31,4	71	25	1589	1113	323	200	207	255
NEXIS V5205/2-OGE/K/400-50	18.5	90.9	90.8	89		31,4	71	16	1589	1113	323	200	207	255
NEXIS V5205/2-OXV/K/400-50	18.5	90.9	90.8	89		31,4	71	16	1589	1113	323	200	207	255

NEXIS V22/36/52

ELECTRICAL AND DIMENSIONAL SPECIFICATIONS NEXIS V5200

• PN16/25/40 - 2 Pole - DN 80

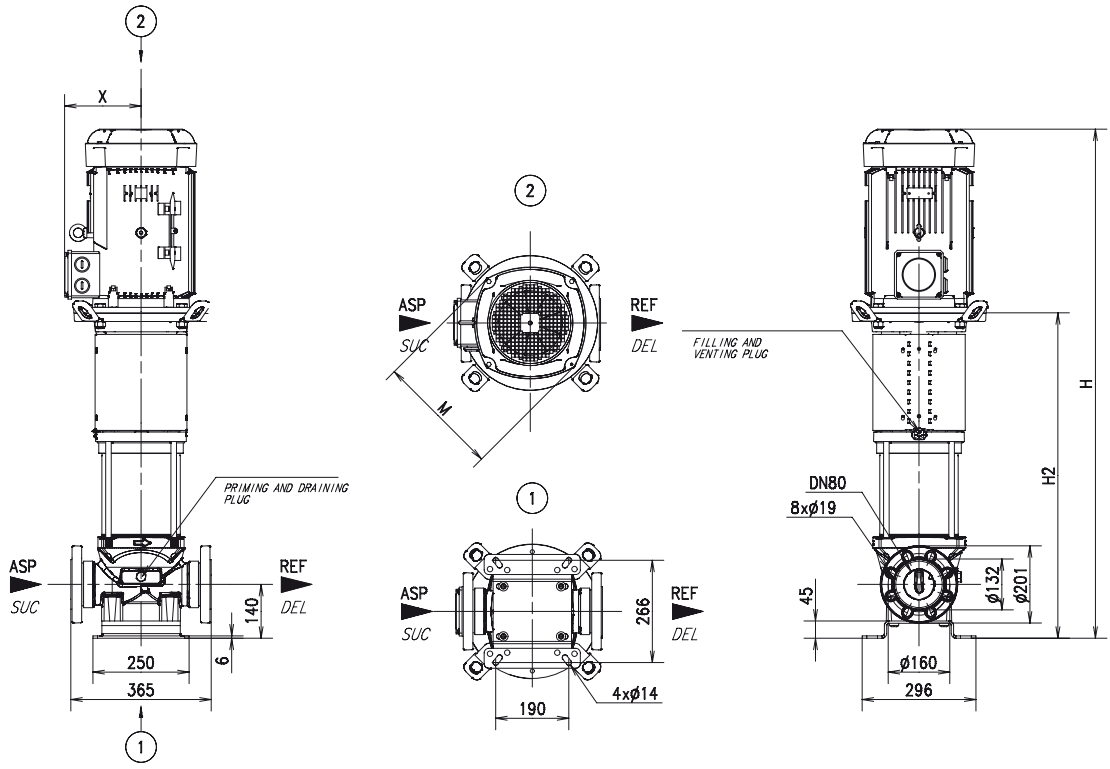

ORDER REFERENCE	MOTOR							PUMP					MASS (kg)	
	P2	Efficiency according to load (%)			Max. current (A)		Noise level	P max	H	H2	ØM	X	without packaging	with packaging
	kW	4/4	3/4	2/4	230 V	400V	dB(A)	bar	mm	mm	mm	mm		
NEXIS V5205-FGE/K/400-50	18.5	90.9	90.8	89		31,4	71	25	1589	1113	323	200	207	255
NEXIS V5205-FXV/K/400-50	18.5	90.9	90.8	89		31,4	71	25	1589	1113	323	200	207	255
NEXIS V5205-OGE/K/400-50	18.5	90.9	90.8	89		31,4	71	16	1589	1113	323	200	207	255
NEXIS V5205-OXV/K/400-50	18.5	90.9	90.8	89		31,4	71	16	1589	1113	323	200	207	255
NEXIS V5206/2-FGE/K/400-50	22	91.3	91.9	91		39,2		25	1689	1213	323	200	231	281
NEXIS V5206/2-FXV/K/400-50	22	91.3	91.9	91		39,2		25	1689	1213	323	200	231	281
NEXIS V5206/2-OGE/K/400-50	22	91.3	91.9	91		39,2		16	1689	1213	323	200	231	281
NEXIS V5206/2-OXV/K/400-50	22	91.3	91.9	91		39,2		16	1689	1213	323	200	231	281
NEXIS V5206-FGE/K/400-50	22	91.3	91.9	91		39,2		25	1689	1213	323	200	231	281
NEXIS V5206-FXV/K/400-50	22	91.3	91.9	91		39,2		25	1689	1213	323	200	231	281
NEXIS V5207/2-FGE/K/400-50	30	92	91.8	90.3		55,1	75	25	1868	1313	415	261	278	326
NEXIS V5207/2-FXV/K/400-50	30	92	91.8	90.3		55,1	75	25	1868	1313	415	261	278	326
NEXIS V5207-FGE/K/400-50	30	92	91.8	90.3		55,1	75	25	1868	1313	415	261	278	326
NEXIS V5207-FXV/K/400-50	30	92	91.8	90.3		55,1	75	25	1868	1313	415	261	278	326
NEXIS V5208/2-FGE/K/400-50	30	92	91.8	90.3		55,1	75	25	1968	1413	415	261	282	332
NEXIS V5208/2-FXV/K/400-50	30	92	91.8	90.3		55,1	75	25	1968	1413	415	261	282	332
NEXIS V5208-FGE/K/400-50	30	92	91.8	90.3		55,1	75	25	1968	1413	415	261	282	332
NEXIS V5208-FXV/K/400-50	30	92	91.8	90.3		55,1	75	25	1968	1413	415	261	282	332
NEXIS V5209/2-FGE/K/400-50	37	92.5	91.9	90.1		70	75	25	2068	1513	415	261	307	357
NEXIS V5209/2-FXV/K/400-50	37	92.5	91.9	90.1		70	75	25	2068	1513	415	261	307	357
NEXIS V5209-TGE/K/400-50	37	92.5	91.9	90.1		70	75	30	2068	1513	415	261	309	359
NEXIS V5209-TXV/K/400-50	37	92.5	91.9	90.1		70	75	30	2068	1513	415	261	309	359
NEXIS V5210/2-TGE/K/400-50	37	92.5	91.9	90.1		70	75	30	2168	1613	415	261	315	365
NEXIS V5210/2-TXV/K/400-50	37	92.5	91.9	90.1		70	75	30	2168	1613	415	261	315	365
NEXIS V5210-TGE/K/400-50	37	92.5	91.9	90.1		70	75	30	2168	1613	415	261	315	365
NEXIS V5210-TXV/K/400-50	37	92.5	91.9	90.1		70	75	30	2168	1613	415	261	315	365

ELECTRICAL AND DIMENSIONAL SPECIFICATIONS NEXIS V5200 MONOBLOC

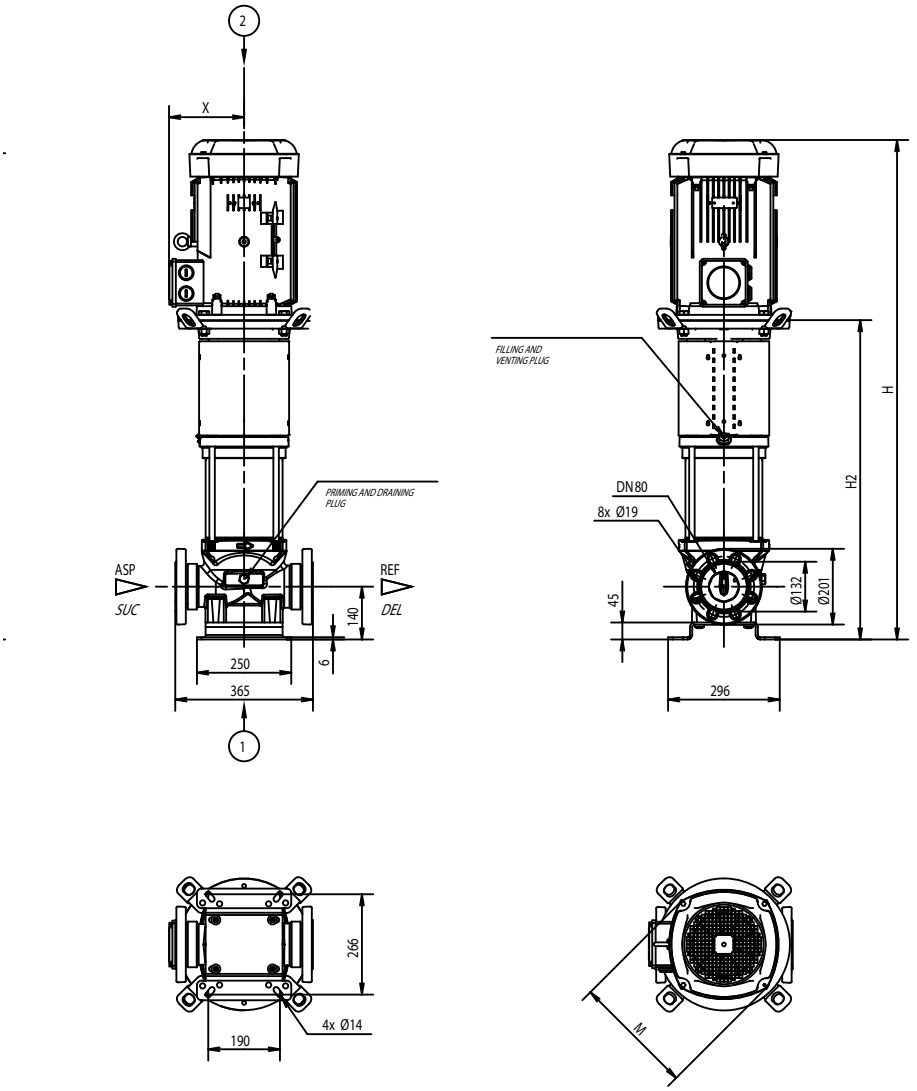

ORDER REFERENCE	MOTOR							PUMP					MASS (kg)	
	P2	Efficiency according to load (%)			Max. current (A)		Noise level	P max	H	H2	ØM	X	without packaging	with packaging
	kW	4/4	3/4	2/4	230 V	400V	dB(A)	bar	mm	mm	mm	mm		
NEXIS V5202/2-ODE/S/400-50	5.5	88.1	86.9	85.2		10,7	69	16	911	583	232	160	95	114
NEXIS V5202-ODE/S/400-50-FF240	7.5	89.5	89.9	88.5		14	69	16	998	603	220	160	107	126
NEXIS V5203/2-ODE/S/400-50-FF240	11	89.4	89.3	87.5		20,2	71	16	1098	703	279	182	155	177
NEXIS V5203-ODE/S/400-50-FF240	11	89.4	89.3	87.5		20,2	71	16	1098	703	279	182	155	177
NEXIS V5204/2-ODE/KS/400-50	15	90.3	90.2	88.4		25,7	71	16	1458	982	323	200	186	236
NEXIS V5204-ODE/KS/400-50	15	90.3	90.2	88.4		25,7	71	16	1458	982	323	200	186	236
NEXIS V5205/2-ODE/KS/400-50	18.5	90.9	90.8	89		31,4	71	16	1558	1082	323	200	203	253
NEXIS V5205-ODE/KS/400-50	18.5	90.9	90.8	89		31,4	71	16	1558	1082	323	200	203	253
NEXIS V5206/2-ODE/KS/400-50	22	91.3	90.9	89.5		37,5	75	16	1658	1182	370	248	224	274

NEXIS V22/36/52

INSTALLATION - DISMANTLING CARTRIDGE : TIGHTENING TORQUES

• Screw type and overview of screwing torque

Pump components		screw type	marking screw	Number	Tightening torque (N.m)
Coupling guard		ST3.9		4	0,7
Coupling	FT115	M8	9903	4	22,5
	FT130 et FF240		9902c		
	FF265		9902J		
	FF300	M12	9902a	4	80
Spacer	FF265	M8	9908	4	22,5
	FF300	M10	9902g	4	45
Shaft end		M8		1	15
Collar		M5		3	4
Cartridge		M6		4	7

MAIN ACCESSORIES

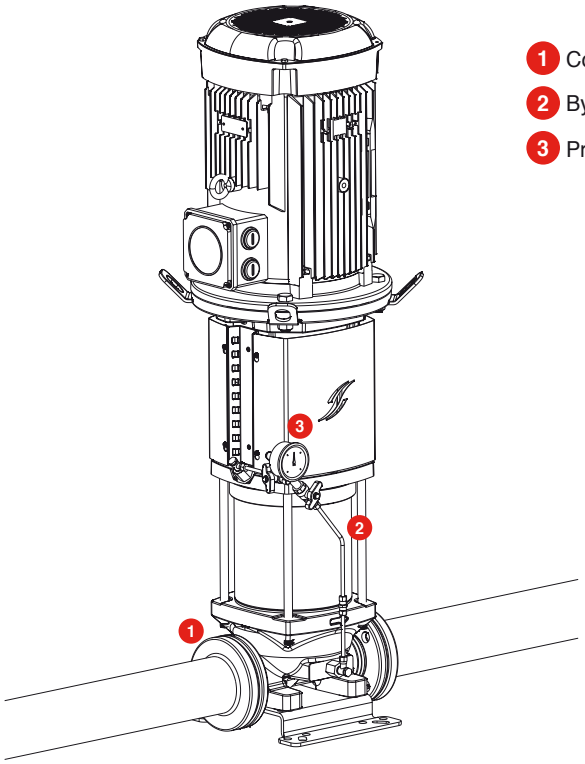

1. Counter flange
2. By-pass kit
3. Pressure sensor

Order reference	Pump type	Designation
4038112	Nexis V2200	2 weld-on Counter flange in steel kit DN50 PN16
4038114	Nexis V2200	2 weld-on Counter flange in steel kit DN50 PN25/40 en acier
4038117	Nexis V3600	2 weld-on Counter flange in steel kit DN65 PN16 en acier
4038119	Nexis V3600	2 weld-on Counter flange in steel kit DN65 PN25/40 en acier
4072533	Nexis V5200	2 weld-on Counter flange in steel kit DN80 PN16 en acier
4072535	Nexis V5200	2 weld-on Counter flange in steel kit DN80 PN25/40 en acier
4038113	Nexis V2200	2 screw-on Counter flange in 316L stainless steel kit DN50 PN16
4038116	Nexis V2200	2 screw-on Counter flange in 316L stainless steel kit DN50 PN25/40 en inox 316L
4038118	Nexis V3600	2 screw-on Counter flange in 316L stainless steel kit DN65 PN16
4038120	Nexis V3600	2 screw-on Counter flange in 316L stainless steel kit DN65 PN25/40
4073796	Nexis V5200	2 screw-on Counter flange in 316L stainless steel kit DN80 PN16
4073798	Nexis V5200	2 screw-on Counter flange in 316L stainless steel kit DN80 PN25/40
4048065	Nexis V2200/3600/5200	16 bar pressure kit in stainless steel
4048066	Nexis V2200/3600/5200	25 bar pressure kit in stainless steel
4124990	Nexis V2200/3600/5200	Nexis 8» by-pass kit 25 bar
4124991	Nexis V2200/3600/5200	Pressure switch and Nexis 8" by-pass kit 25 bar

FEATURES

a) Electrical

- "T" types: 3~ 230-400 V - 50 Hz
or 3~ 400 V Δ above 4 kW.
- Motors MUST be protected by a slave switch.

b) Installation

- On solid base using foundation bolts.
- Installation of pump in suction mode with compulsory strainer foot valve, or flooded suction mode on storage tank or mains water system with low water protection kit.
- Connection to pump by round backflanges for PN 16 and PN25 series.
- The installation must allow for the protection of the pump against adverse weather conditions and frost (avoid direct exposure to rain or sun).

c) Various subject

- **Pump without motor available on request**
- **60 Hz pump on request**
- **Collective packaging available on request**
- **PN16 series / PN 25 series** with round flanges: pump supplied with gaskets and bolts, without backflanges (optional).

d) Maintenance

Replacement of recommended spare parts (•) subject to wear (see sectional diagram).

AUTRES ACCESSOIRES

- Shut-off valves
- Non-return valves
- Strainer foot valve
- Vibration-damping sleeves
- Bladder or galvanised tanks
- Surge tanks
- ME low-water protection kit
- Protective slave switch for motor
- Pressure sensor: 6,10,16,25 bar, etc.

OPERATING RANGES

Flow rates of up to:	80 m³/h
Manometric heads of up to:	240 m
Max. delivery pressure:	16 & 25 bar
Max. intake pressure :	10 bar
Temperature range:	- 20° to +120°C**
Max. ambient temperature:	+ 50°C
DN of ports :	25 à 80
Reference MEI* :	≥ 0,70

*Minimum Efficiency Index

** according to mechanical seal and gasket

NEXIS VE 2/4/6/10/16/22/36/52

STAINLESS STEEL VERTICAL MULTISTAGE PUMPS HIGH EFFICIENCY

with integral ESV*

In-line series - 50/60 Hz

2 ranges: 304 and 316L stainless steel

*** Electronic Speed Variation**

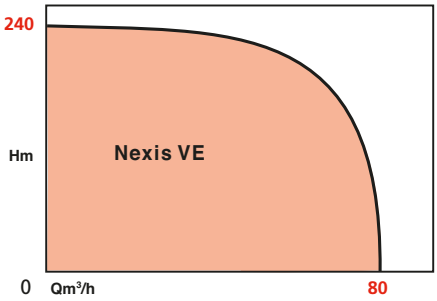

APPLICATIONS

Pumping of clean, non-muddy liquids in the housing, agricultural and industrial sectors.

- Supply - Boosting.
- Watering - Irrigation.
- High-pressure washing.
- Heating - Air conditioning.
- Water treatment.

Incorporation into modular pressure-boosting systems.

Pumped fluids:

- **304 range :** clear and non-corrosive liquids (drinking water, glycol water)
- **316L range:** corrosive liquids (demineralised seawater, chlorinated water, etc) compatible with the materials of the pump.

ADVANTAGES

ENERGY SAVINGS

- Pumps equipped with IE2 motors and high-efficiency hydraulics.
- Optimisation of the complete pump + IE2 motor + converter product, guaranteeing energy savings.

EASIER TO USE

- Hoisting mechanism for easier maintenance.
- Fewer mechanical and electrical constraints compared to a standard pump.
- Quieter operation due to the adaptation of the pump speed to the requirements.
- User-friendly installation and use due to easy installation and operation.

SERVICING/MAINTENANCE

- Automatic diagnoses for easier maintenance.
- Standardised cartridge mechanical seals available for the entire range, for temperatures of up to 120°C.
- Spacer design available on all models in which the motor weighs ≥5.5kW. Allows the installer or operator to replace the mechanical seal without removing the motor.
- Monobloc pump casing on demand.



• Optimised 2D/3D high-efficiency hydraulics



• Cartridge mechanical seal
Standard seal



• Mobile flanges and modular construction
Easy installation (Nexis VE22/36/52 only)

• Nexis VE 2205-2G



EVS

Certified ACS

NEXIS VE 2/4/6/10/16/22/36/52

DESIGN

• Hydraulic part

All stainless steel. Centrifugal.
Multi-stage: 1 to 22 stages.
Vertical axis, in-line suction/delivery orifices in the lower part. Housing equipped with :
- Oval flanges (Nexis VE 2/4/6/10/16) or round flanges (Nexis-VE 22/36/52) in PN 16.
- Round flanges in PN 25.

Lower guide bearing above the second stage.
Standardised mechanical seal ensures leak-tightness of shaft passage.

• Motor

IEC IE2 motor, closed with flange and standardised shaft end for vertical operation, equipped with ESV.
Motor connected to pump by coupling with a safety guard.

Winding:	3~ 380 to 440V V ± 6%
Frequency :	50 & 60 Hz
Insulation class:	155 (F)
Protection class:	IP55

BASIC CONSTRUCTION

Range	Non-corrosive liquid (304L stainless steel range)		Corrosive liquids (316L range)
Main parts	**Material**		
	Nexis-VE 2/4/6/10/16	**Nexis-VE 22/36/52**	**Nexis-VE 2 à 52**
Suction-delivery housing	304 stainless steel	EN GJL 250 cast iron	316L stainless steel
Motor lantern ring mount	Cataphoresis-treated EN GJL 250 cast iron		
Impellers	304L Stainless steel		316L Stainless steel
Cells (stage housing)	304L Stainless steel		316L Stainless steel
External pipe sleeve	304L Stainless steel		316L Stainless steel
Pump shaft	304L Stainless steel		316L Stainless steel
Intermediate bearing	Tungsten carbide		
Mechanical seal	Si carbide or Tungsten/Carbon (SiC/C or CW/C)		
O-rings	EPDM*		Viton**
Plugs	304 Stainless steel/ 316L Stainless steel		

* T° 120°C — **T°90°C

316L stainless steel pumps are only available with PN 25 housings with round flanges.

NB : 316L stainless steel pumps are only available with PN 25 housings with round flanges.
NB. 304 (X5CrNi18-10) or 316 L (X2CrNiMo17.12.2) stainless steel - recommended materials offering excellent corrosion resistance. Clean and clear liquids with no fibres and low sand/silica content (max. concentration 40 g/m3). Clean and clear liquids with no fibres and low sand/silica content (max. concentration 40 g/m3).

OPERATION

Electronic Speed Variation is a feature of the asynchronous motors on Nexis-VE centrifugal pumps. The aim is to regulate the speed of the alternating current motor by converting the voltage and frequency of the network from 380 to 440V +6%, under 50 or 60 Hz, into a system of three-phase voltages of variable frequencies and amplitudes.
The frequency converter can thus be used to control the speed of the motor.
This simultaneous action concerning frequency and voltage is carried out via two main elements:

-A diode rectifier
-A Pulse-Width Modulated (PWM) inverter

The rectifier is a diode bridge. The alternating voltage that crosses this diode bridge is converted into a «rectified» current.
At this stage, in order to improve the quality of the voltage at the rectifier outlet, a set of capacitances and induction coils eliminates the slight residual waviness that emerges from the rectifier. We thus obtain a smoothed direct voltage referred to as the «DC bus».
Following this change, the inverter will permanently regulate the voltage at the variable voltage regulator outlet in order to optimise the magnetisation of the motor. The fixed voltage at the inverter input is converted into variable voltage, operating in the form of voltage impulses for a variable period of time, via transistors.

This OPERATION is called Pulse Width Modulation (PWM). These transistors are controlled by the microcontroller, which may or may not activate them, thus allowing for the variation of frequency at the variable speed regulator outlet.
The transistors (IGTB: Insulated Gate Bipolar Transistors) thus operate in switching mode and act as switches to convert direct voltage into variable voltage. The activation or switching frequency of the IGBTs allows for the creation of variable magnitudes of voltage and frequency. This frequency must be high in order to eliminate the noise generated by magnetisation (frequency is inaudible to the human ear: 8 to 16 kHz).

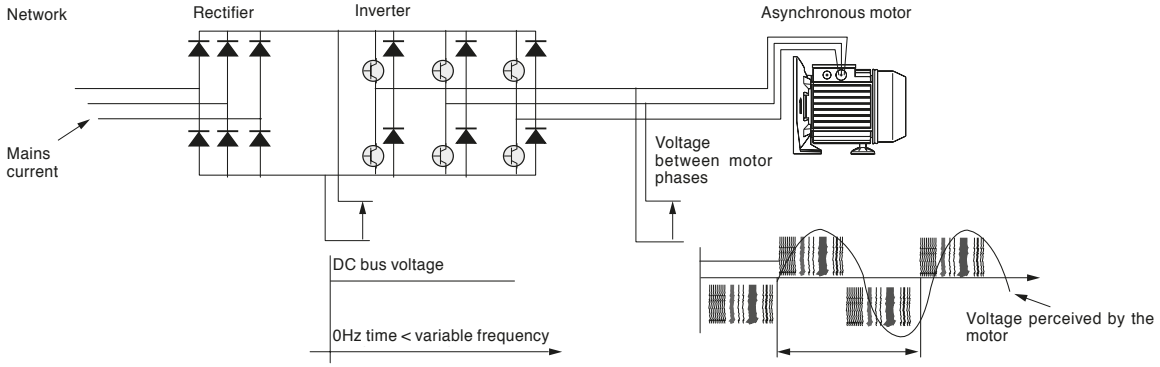

NEXIS VE 2/4/6/10/16/22/36/52

IDENTIFICATION

NEXIS VE 22 03 / 2 - OSE / KS / XXXX / B - 2G

Pump family

Nominal flowrate (at 50 Hz / 2 poles)

Total number of impellers

Total number of trimmed impellers

Maximum pump pressure
O = 16 bar PN16 oval flanges
F = 25 bar PN25 round flanges
P = Casing for vitaulic connectors

G = GJL-250 cast iron pump housing + 1.4307 stainless steel hydraulics (only on models 22/36/52))
S = 1.4301 stainless steel pump housing + 1.4307 stainless steel hydraulics (only on models 2/4/6/10/16)
X = 1.4409/1.4 404 stainless steel pump housing + 1.4404 stainless steel hydraulics
D = GJL-250 cast iron monobloc pump housing (cataphoresis ACS) + 1.4307 (AISI 304) stainless steel hydraulics

E= O-rings: EPDM + mechanical seal EPDM
V= O-rings: FKM (VITON) + mechanical seal FKM (Viton)

Nothing: without motor
K = cartridge seal
S = «System» orientation (booster pump)
KS = cartridge seal + «system» orientation

«Nothing»: variant = no option
EC = collective packaging
OXXX = OEM customisation

Version index

2G: 2nd generation variable speed controller with display

OPERATION

3 operating modes may be chosen depending on the application and the requirements. The user uses a push button on the front to choose the operating mode. If the pump is supplied separately and not integrated into a system that we have assembled, the configuration mode upon delivery is «Speed control».
The modes can be viewed on a display.

• «Speed control» mode (pump only)

The pump is installed like a Nexis-V standard pump, but its speed can be regulated manually, which allows it to operate over a range of flow rate/pressure curves according to the installation's needs.

On the basis of the required Q/H point, the operating frequency is determined with reference to the characteristic curves (see following pages).

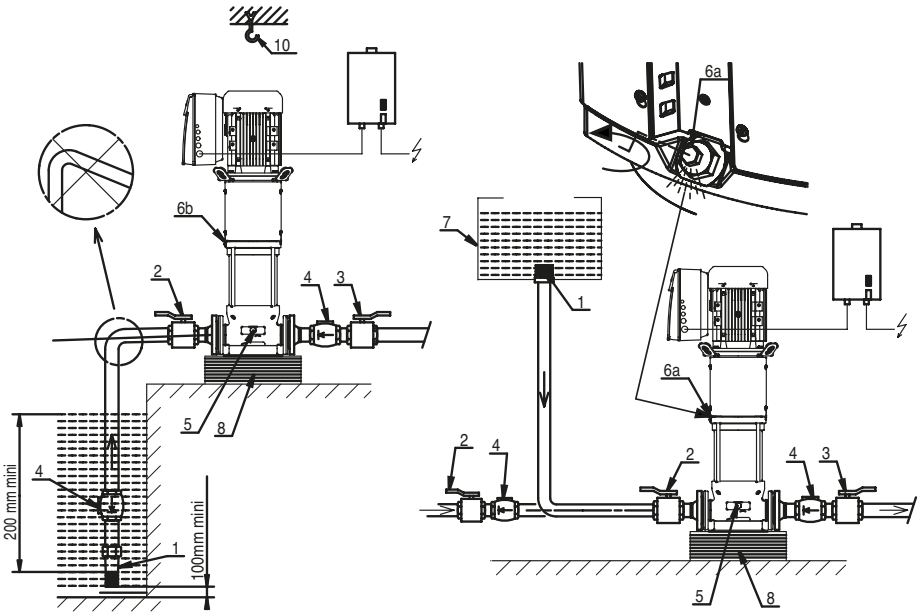

KEY
01 - Strainer foot valve
02 - Pump suction valve
03 - Pump delivery valve
04 - Non-return valve
05 - Emptying/priming plug
06 - Filling plug
07 - Storage tank
08 - Concrete base block

NEXIS VE 2/4/6/10/16/22/36/52

OPERATION

• «Speed control» mode (for use in a booster pump)

Setting buttons:

Encodeur: setting by the encoder:

A new parameter is selected simply by rotating: «+» to the right and «-» to the left. This new setting is confirmed by pressing the encoder button.

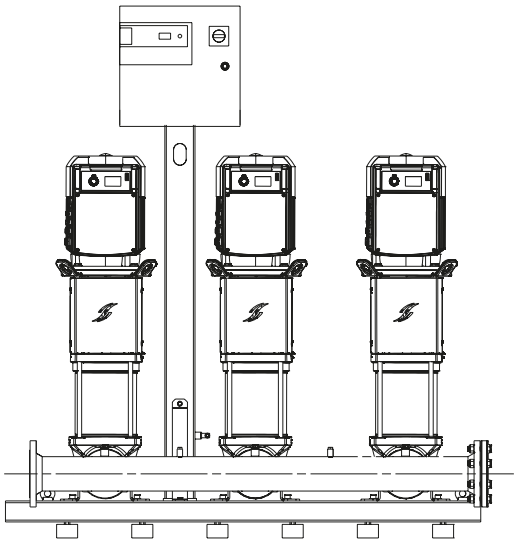

• «Constant pressure» mode or «Variable pressure» mode

Pump mode alone for pressure regulation. The pump is installed with its pressure sensor which can be attached to the pump or to the delivery pipe. The set point pressure value is adjusted during the installation of the pump using the push button on the front.

Operation: When the actual pressure, measured by the sensor, drops below the setpoint pressure, the pump starts up and regulates its speed in order to achieve the setpoint pressure. The pump stops automatically whenever it detects a zero flow rate or a lack of water
.

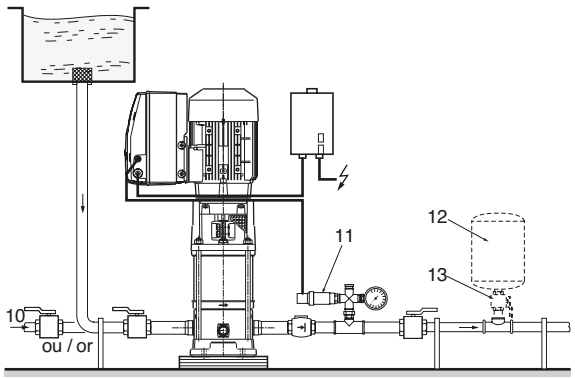

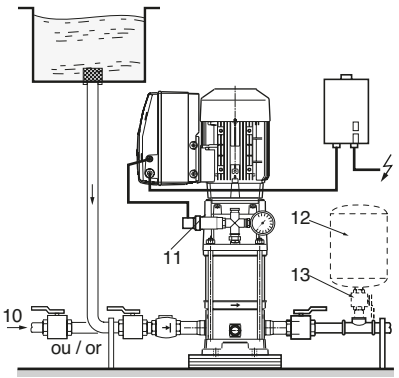

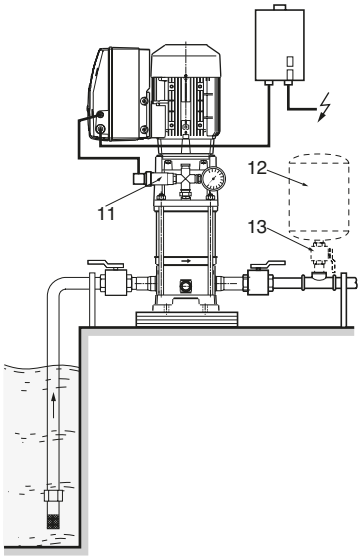

KEY
10 - Mains water supply
11 - Pressure sensor kit
12 - Tank
13 - Tank shut-off valve

• «PDI control» mode

Regulation via a sensor (detecting temperature, flow rate, etc.) by PDI control and setting a setpoint value (internal or external).

The frequency can also be varied by an external control. The powering on, stoppage and rotation speed of the pump are controlled by a 0-10 V or 4-20 mA input signal.

OPERATION

• «Speed control» mode

Regulation of frequency from 30% to 100%

• Display

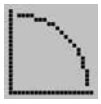

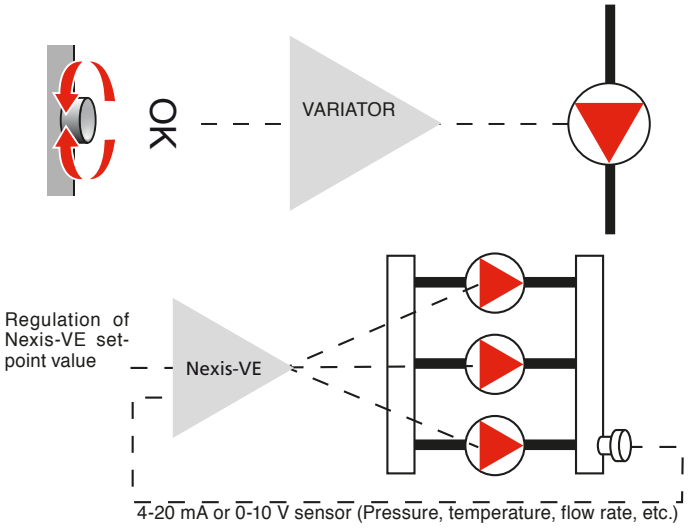

- Speed shown on-screen

• On/Off
- Remotely
- With button

• «Constant pressure» mode.

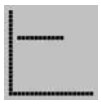

Regulation of setpoint value (0 to 100% of the sensor's range)

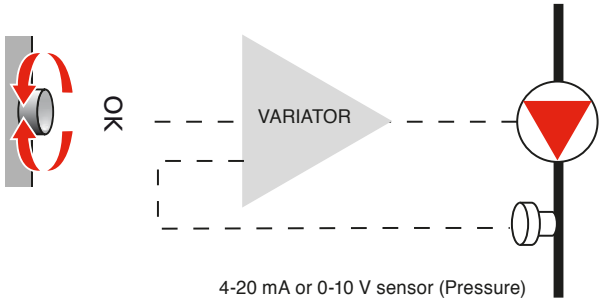

• Display
- Display of pressure in pressure setting

• On/Off
- Remotely
- With button

• Pressure adjustment
- Pressure adjustment using buttons OR
- Setpoint value adjustment via an external signal

• Mode « Contrôle P.I.D. »

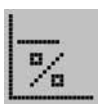

Regulation of setpoint value (0 to 100% of the sensor's range)

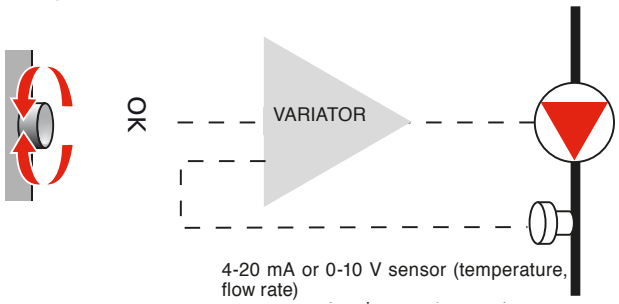

• Display
- % display for the other types of regulation

• On/Off
- Remotely
- With button

• Other types of regulation
- Possible to adjust the PDI corrector
- Choice of type of regulation (flow rate, temperature, etc)

NEXIS VE 2/4/6/10/16/22/36/52

INTEGRATED FUNCTIONS - CONNECTOR TECHNOLOGY

The following functions are integrated into the pump according to the different modes:
- Self-illuminating display
- Remote or push-button operated on-off
- Automatic zero flowrate detection
- Low water detection
- Locking of parameters and setpoint value
- Reduction of nominal speed according to the pumped liquid
- Protection from:
  - Short-circuits
  - Current overloads
  - Over/Under-voltage
  - Excessive temperatures
  - Power line disturbances
  - Missing phase
- Maintenance self-diagnosis via error code on the display.

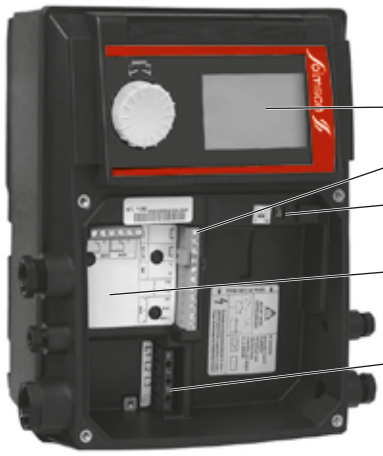

• 5.5 to 7.5 kW box

Display

Control connectors

Switches for locking of parameters and setpoint value

Relays for SBM unavailability and SSM fault transmissions

Phase 1 / 2 / 3 + earth power terminal

L1	L2	L3	PE

MANAGEMENT OF THE INTEGRATED ESV SYSTEM

Maintenance diagnosis

The analysis is carried out in relation to parameters such as over/under-voltage, lack of power to sensor or broken cable, short-circuit, overload, etc.

The pump then signals a fault via the red diode and an error code shown on the display.

EVS

Fault no.	Reaction time before fault signalling	Time before fault is accounted for after signalling	Standby time before automatic restart	Max. faults over 24 h	Failures Possible causes	Solutions	Standby time before reset
E001	60s	immediate	60s	6	The pump is overloaded, defective.	Excessive density and/or viscosity of the pumped fluid	300s
					The pump is blocked by foreign bodies	Dismantle the pump, replace the defective components or clean	
E004 (E.032)	~5s	300s	Immediate if fault is eliminated	6	There is under-voltage in the power supply of the variable speed controller.	Check the voltage at the variable speed controller terminals: -> fault if the system < 330V	0s
E005 (E.033)	~5s	300s	Immediate if fault is eliminated	6	There is over-voltage in the variable speed controller power supply.	Check the voltage at the variable speed controller terminals: -> fault if the system > 480 V	0s
E006	~5s	immediate	Immediate if fault is eliminated	6	A phase of the power supply is missing.	Check the power supply	0s
E007	immediate	immediate	Immediate if fault is eliminated	no limit	The variable speed controller is operating as a generator. Warning, without stoppage of the pump	The pump is backdriving, check that the valve is leaktight.	0s
E010	~5s	immediate	no restart	1	The pump is blocked	Dismantle the pump, clean it and replace the defective parts. Possible mechanical fault on the motor (bearings	60s

MANAGEMENT OF THE INTEGRATED ESV SYSTEM

Fault no.	Reaction time before fault signalling	Time before fault is accounted for after signalling	Standby time before automatic restart	Max. faults over 24 h	Failures Possible causes	Solutions	Standby time before reset
E011	60s	immediate	60s	6	The pump is unprimed or running dry	Reprime by filling the pump. Check the leak-tightness of the foot valve	300s
E020	~5s	immediate	300s	6	The motor is heating up	Clean the motor's cooling fins	300s
					Ambient temperature above +50°C.	The motor is designed to operate at a max. ambient temperature of +50°C	
E023	immediate	immediate	60s	6	The motor is short-circuiting	Dismantle the pump's motor-variable speed controller and test it or replace it	60s
E025	immediate	immediate	no restart	1	A phase of the motor is missing	Check the connection between the motor and variable speed controller.	60s
E026	~5s	immediate	300s	6	The motor's temperature sensor is defective or there is a faulty connection	Dismantle the pump's motor-variable speed controller and test it or replace it	300s
E030 E031	~5s	immediate	300s	6	The variable speed controller is heating up	Clean the cooling fins at the rear and underneath the variable speed controller as well as the fan housing	300s
					Ambient temperature above +50°C.	The motor is designed to operate at a max. ambient temperature of +50°C	
E042	~5s	immediate	no restart	1	The sensor cable (4-20 mA) is broken.	Check the sensor's power supply and wiring.	60s
E050	60s	immediate	Immediate if fault is eliminated	No limit	BMS communication is defective.	Check the connection.	300s
E070	immediate	immediate	no restart	1	Internal communication fault	Contact an After-Sales Service technician	60s
E071	immediate	immediate	no restart	1	EEPROM fault.	Contact an After-Sales Service technician	60s
E072	immediate	immediate	no restart	1	Internal variable speed controller problem	Contact an After-Sales Service technician	60s
E075	immediate	immediate	no restart	1	Fault on the inrush current limitation relay	Contact an After-Sales Service technician	60s
E076	immediate	immediate	no restart	1	Sensor current fault	Contact an After-Sales Service technician	60s
E099	immediate	immediate	no restart	1	Unknown pump type	Contact an After-Sales Service technician	Power off/on

NEXIS VE 2/4/6/10/16/22/36/52

HYDRAULIC PERFORMANCES

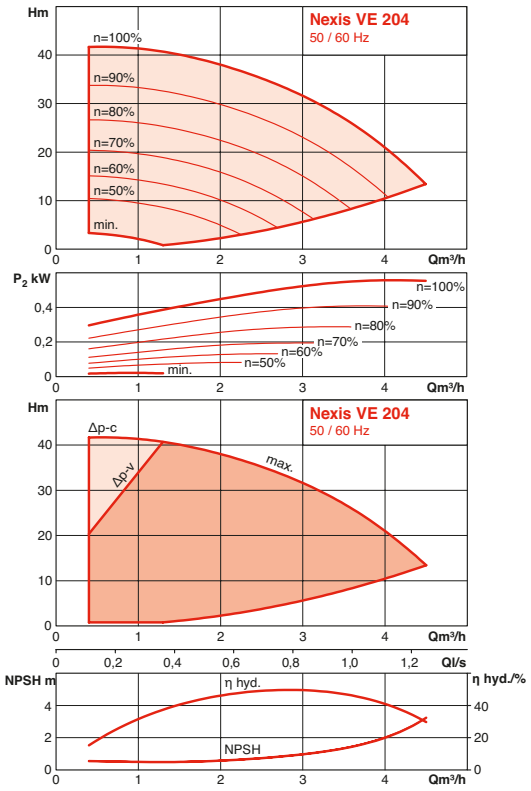

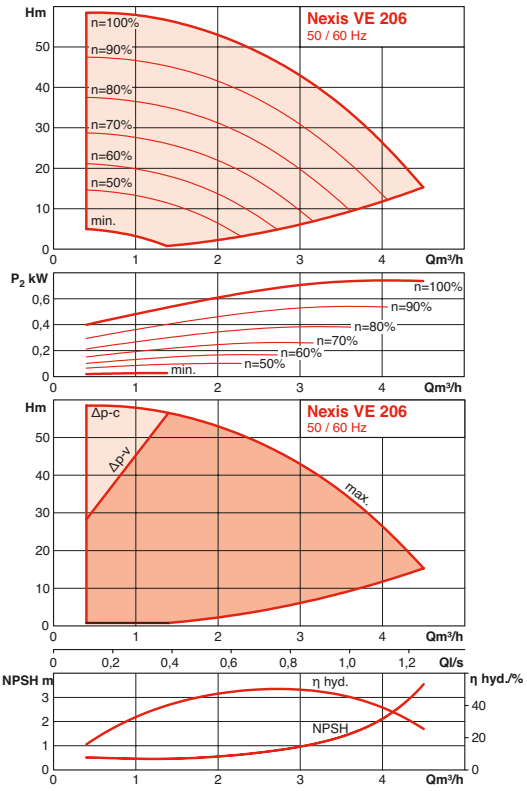

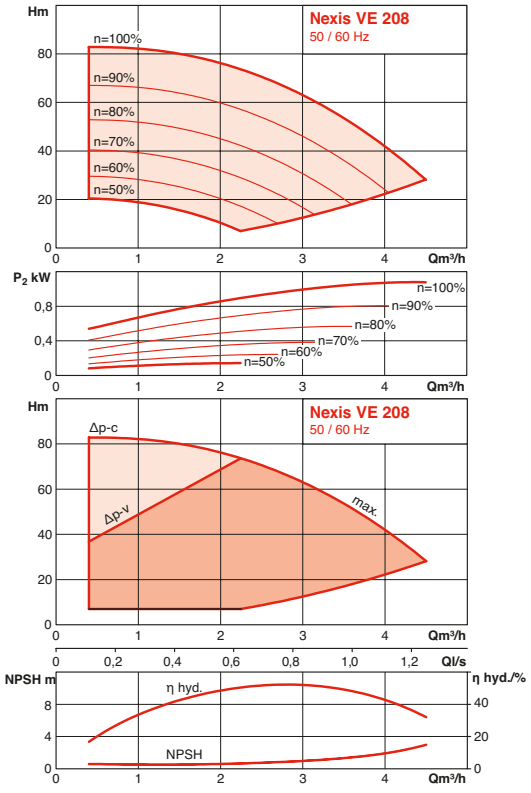

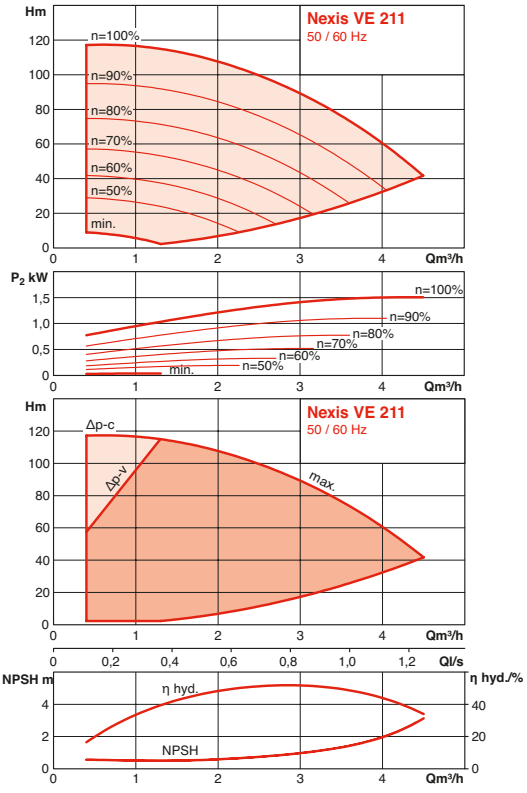

NEXIS VE 2/4/6/10/16/22/36/52

HYDRAULIC PERFORMANCES

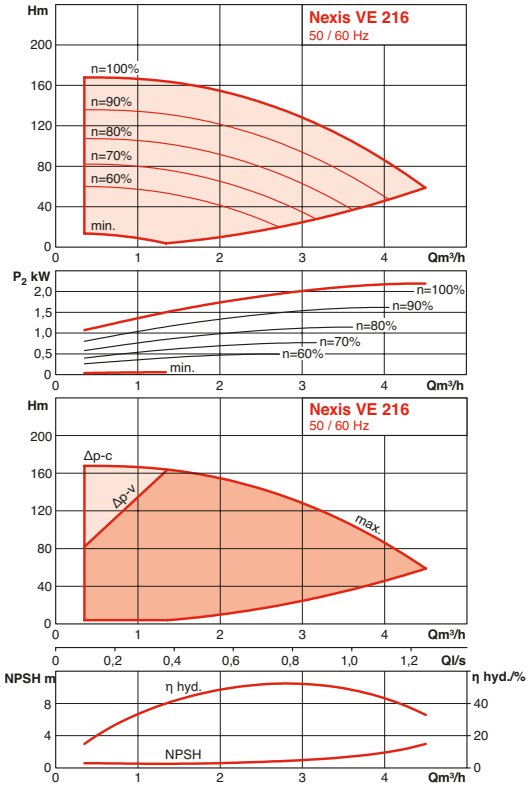

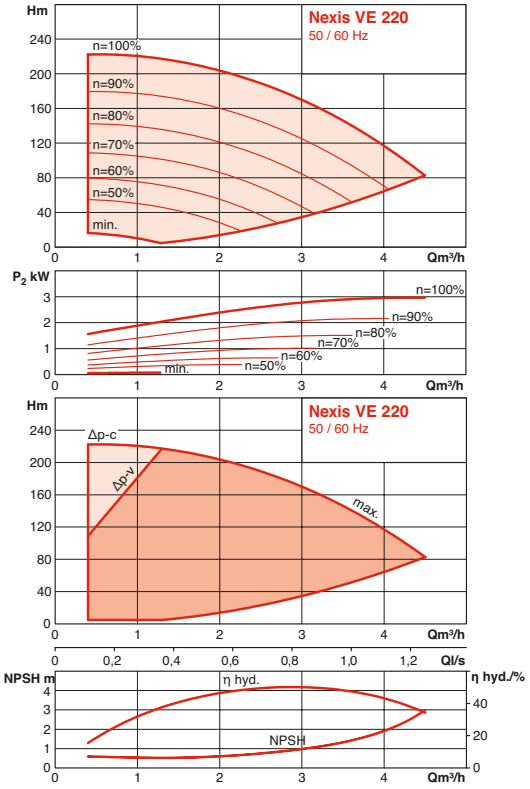

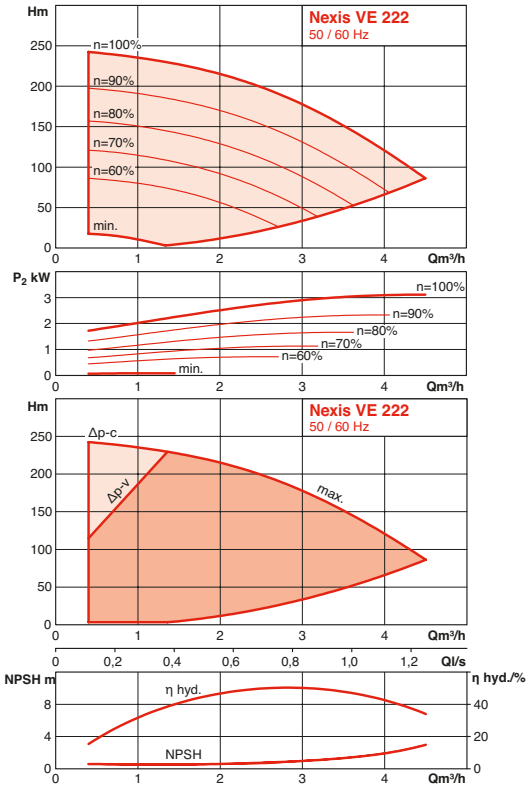

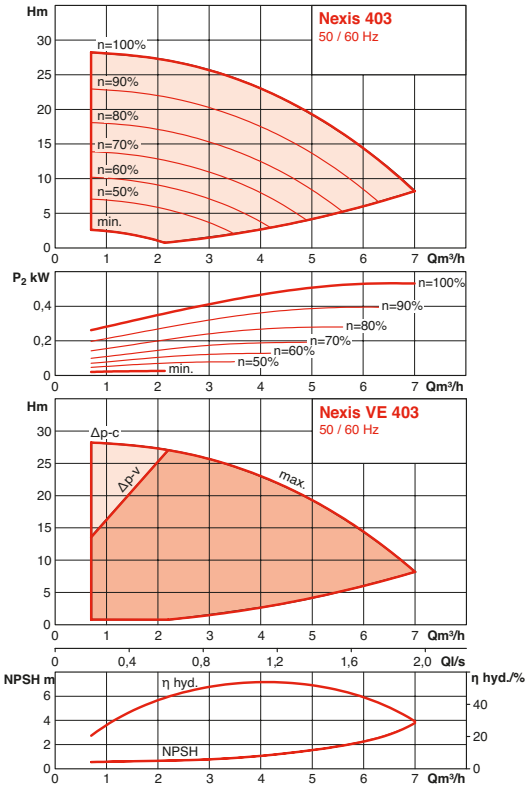

NEXIS VE 2/4/6/10/16/22/36/52

HYDRAULIC PERFORMANCES

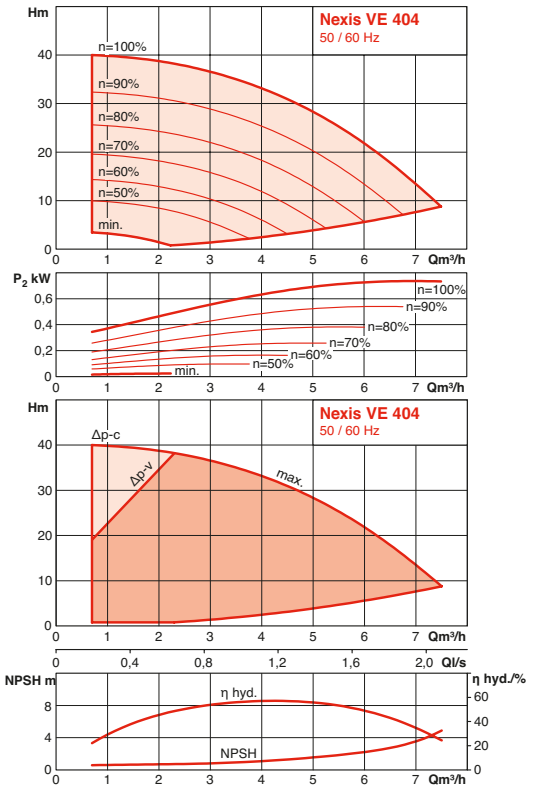

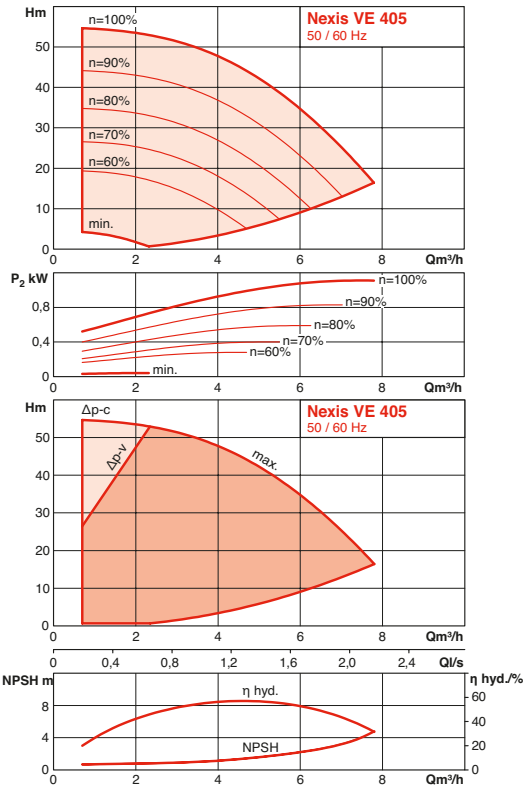

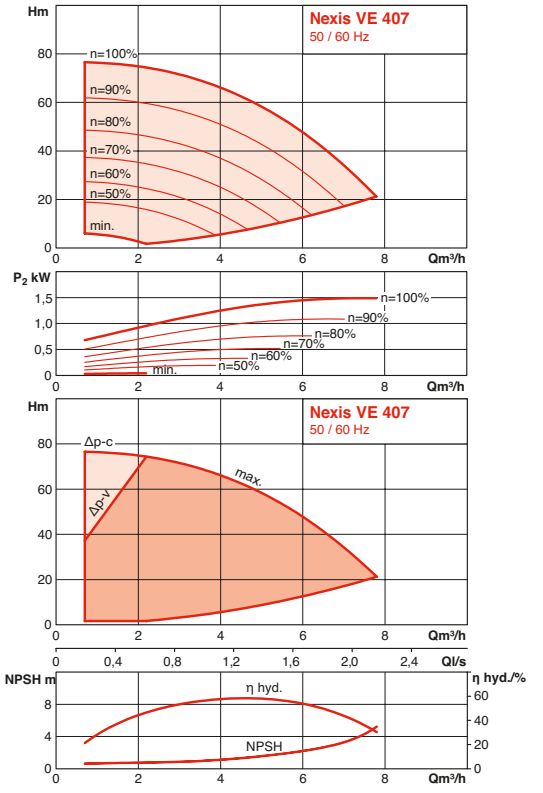

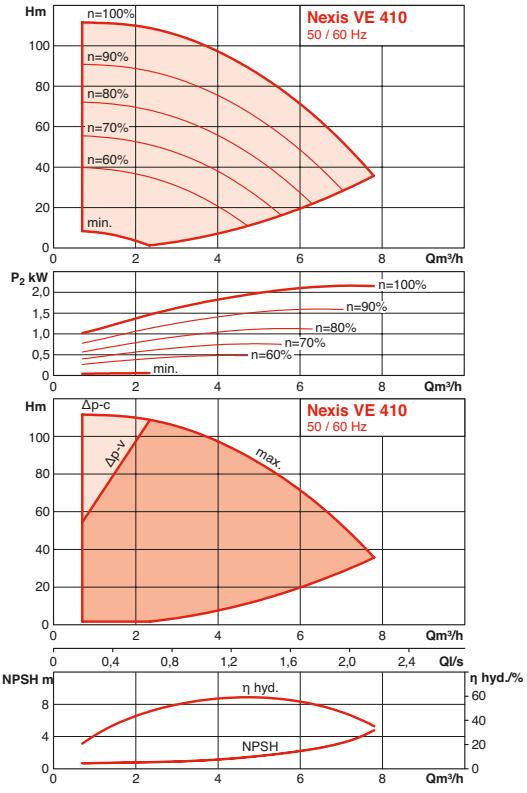

NEXIS VE 2/4/6/10/16/22/36/52

HYDRAULIC PERFORMANCES

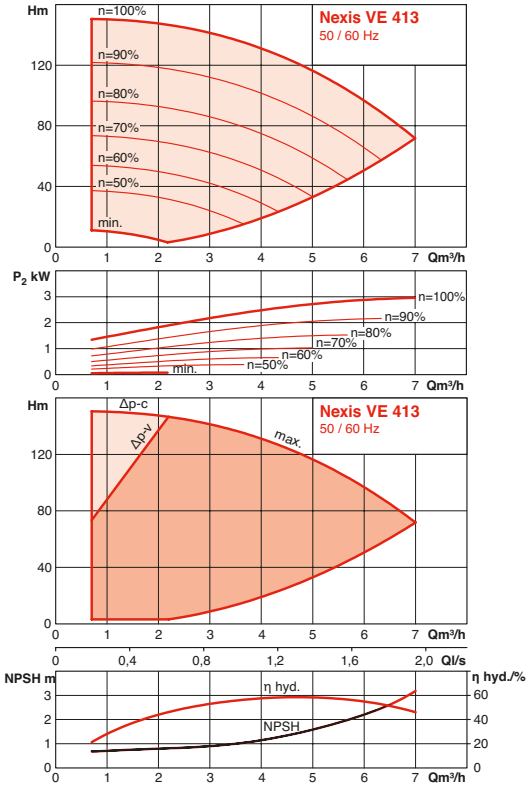

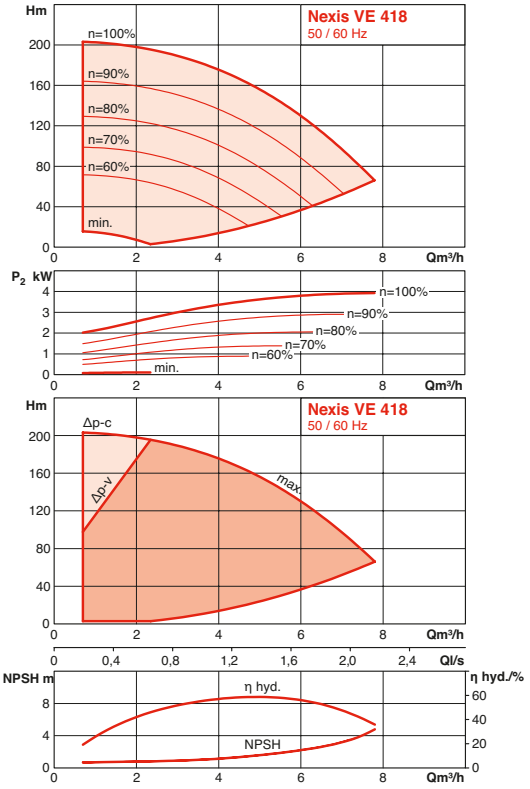

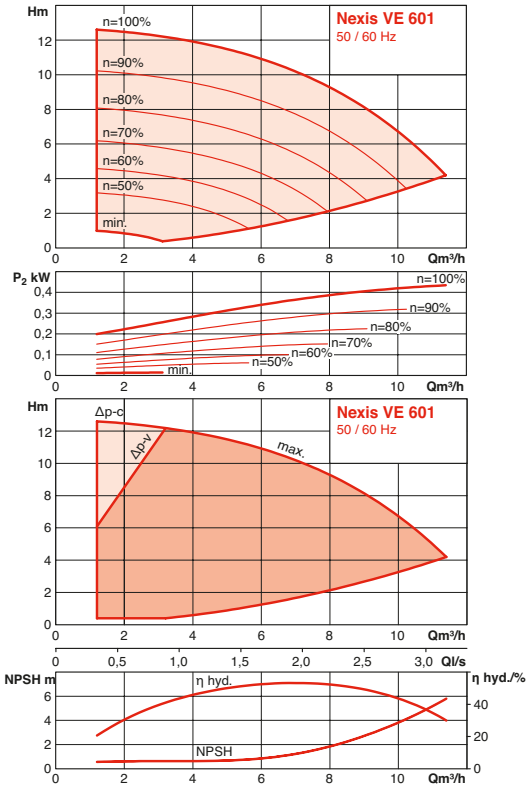

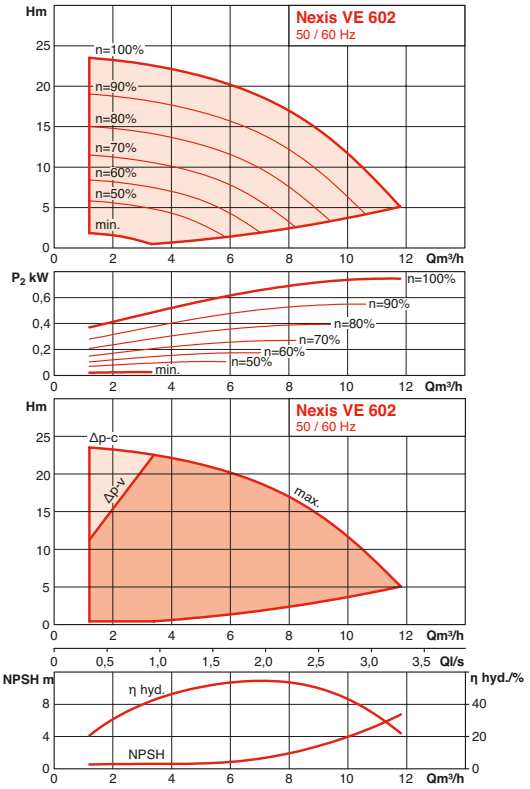

NEXIS VE 2/4/6/10/16/22/36/52

HYDRAULIC PERFORMANCES

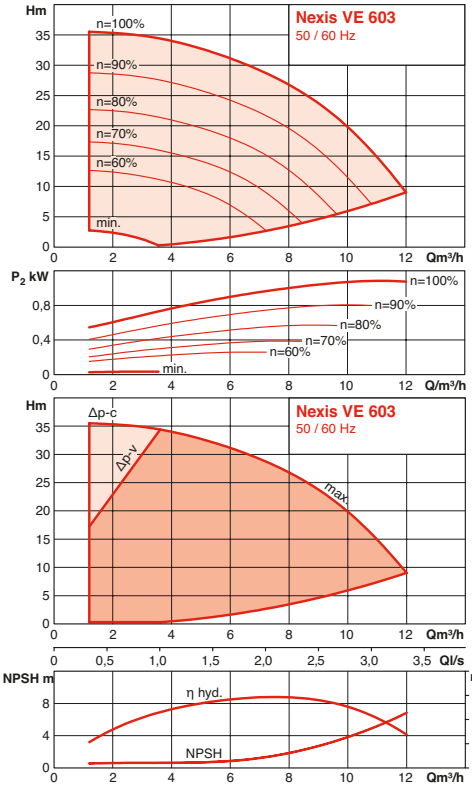

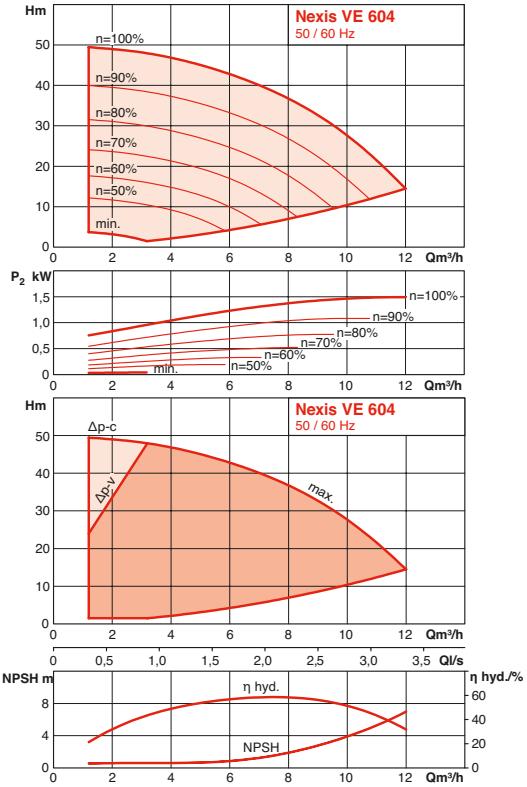

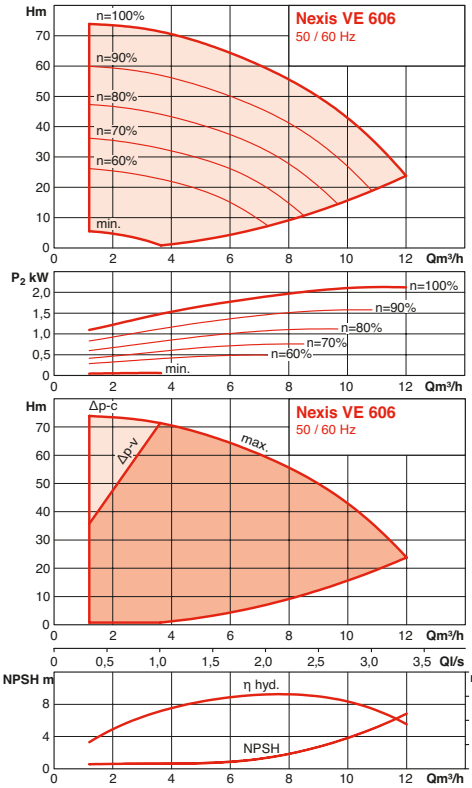

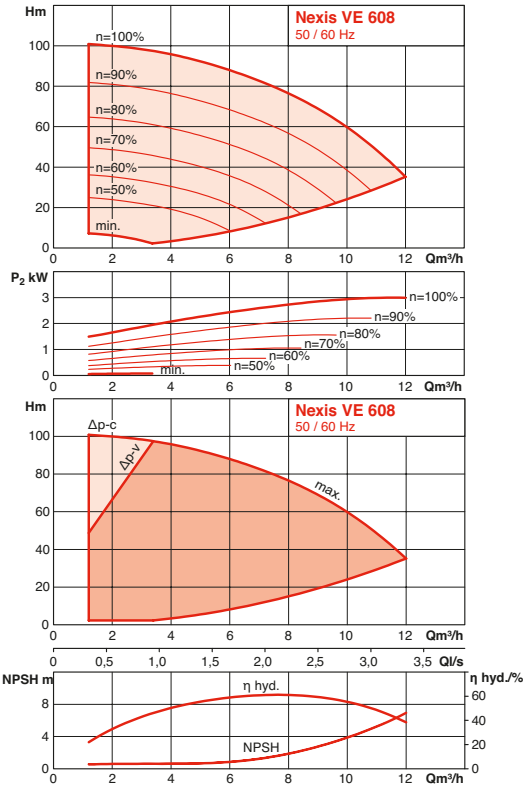

NEXIS VE 2/4/6/10/16/22/36/52

HYDRAULIC PERFORMANCES

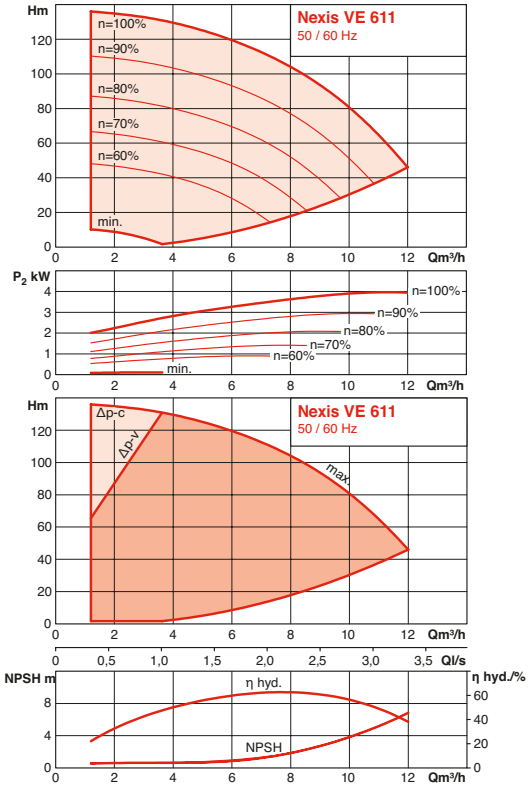

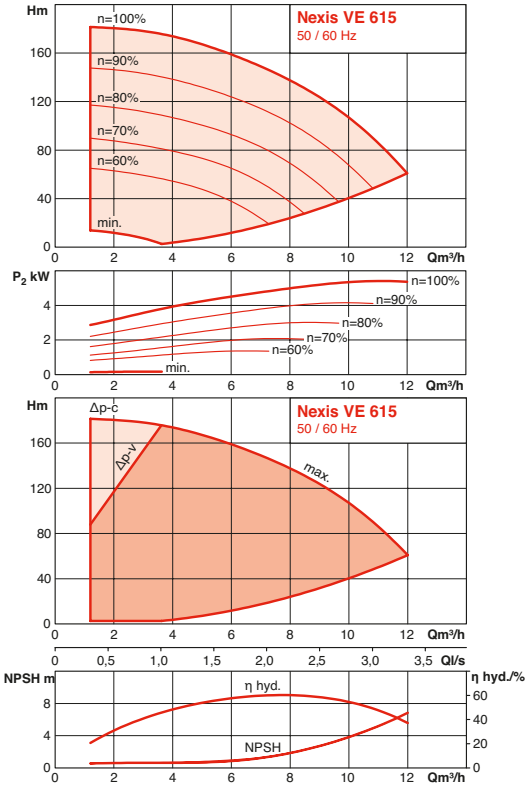

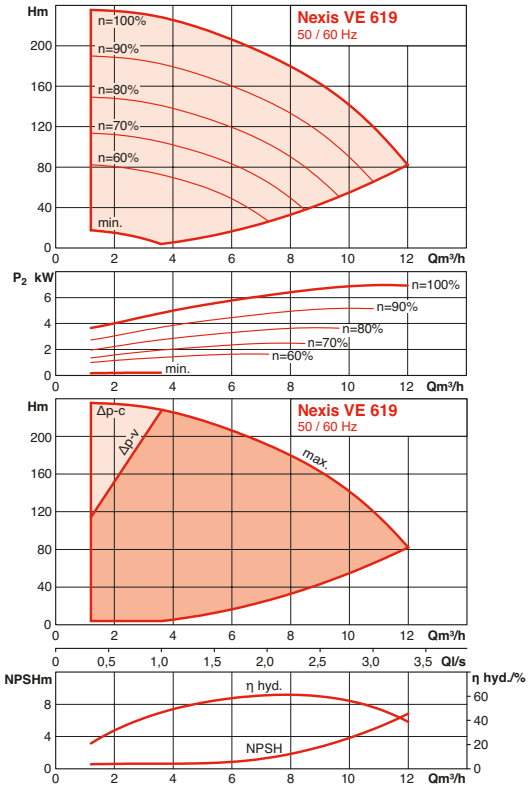

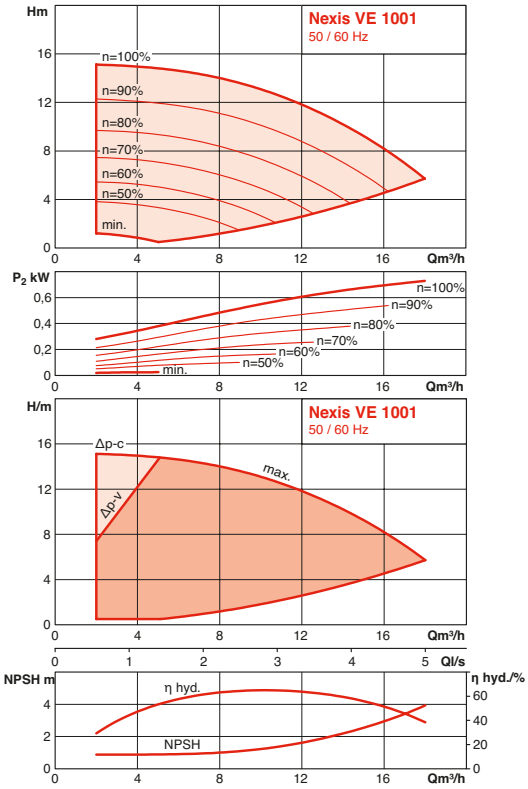

NEXIS VE 2/4/6/10/16/22/36/52

HYDRAULIC PERFORMANCES

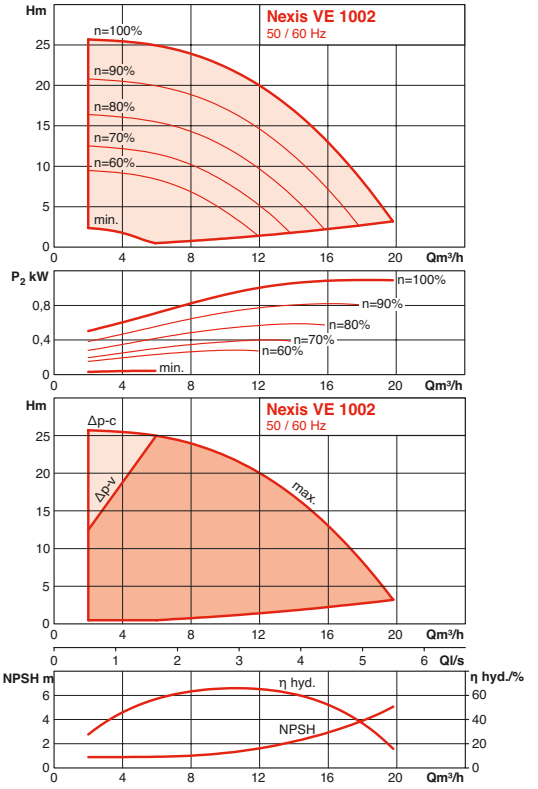

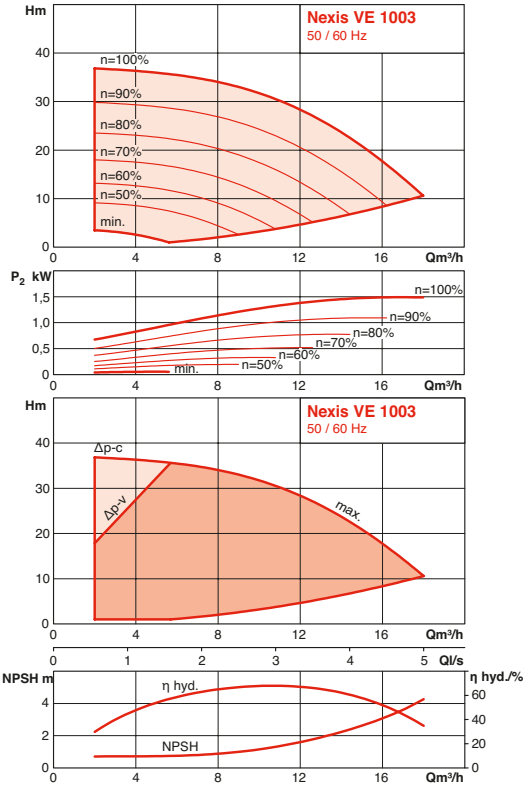

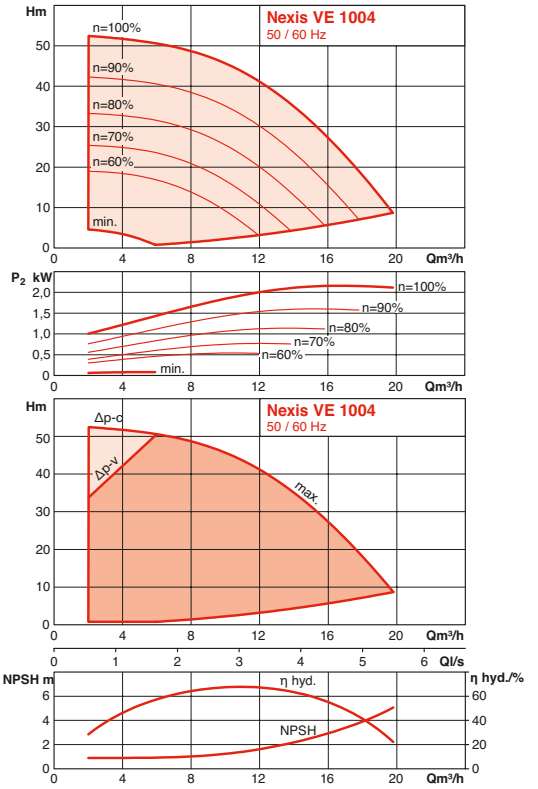

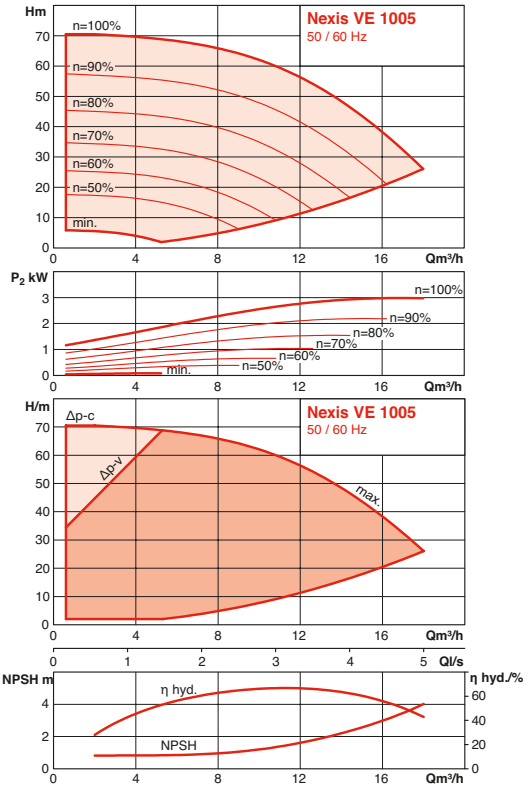

HYDRAULIC PERFORMANCES

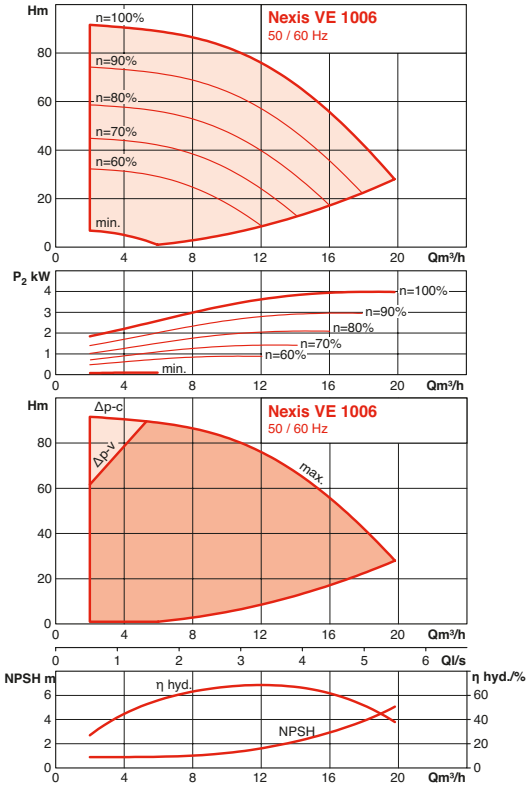

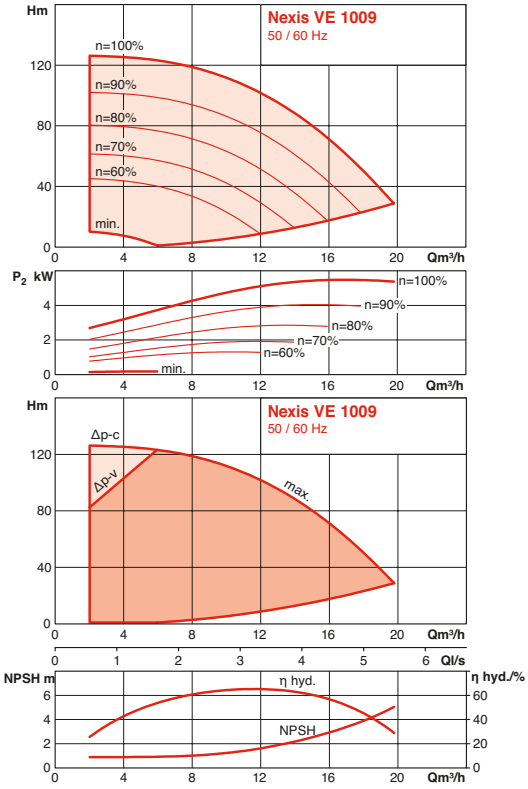

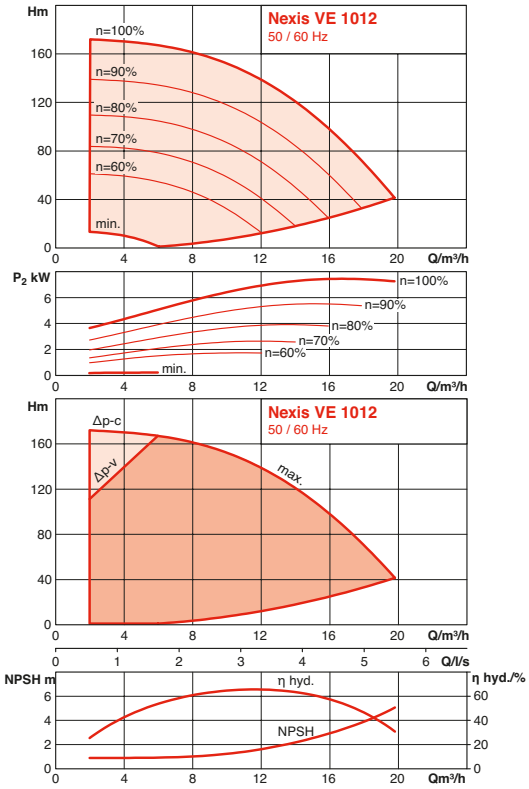

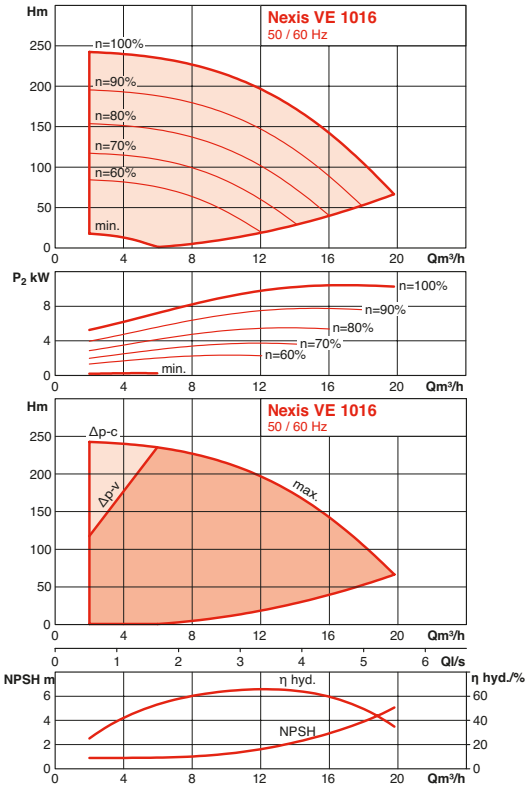

NEXIS VE 2/4/6/10/16/22/36/52

HYDRAULIC PERFORMANCES

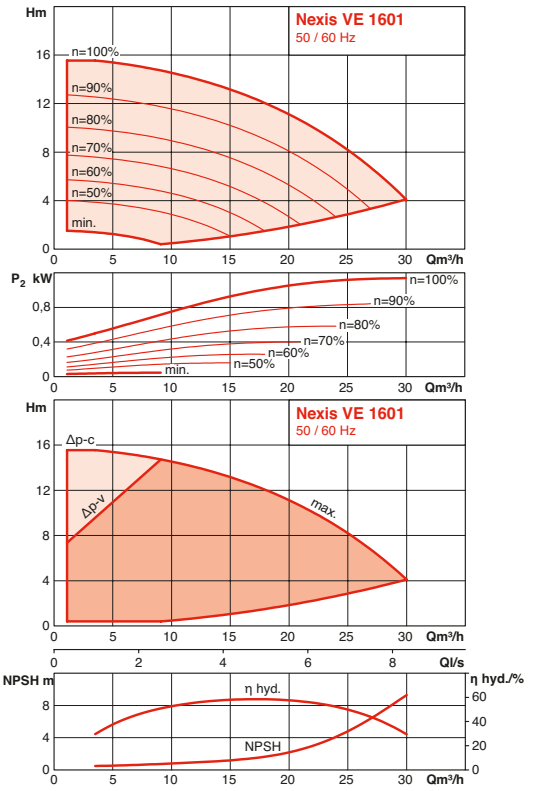

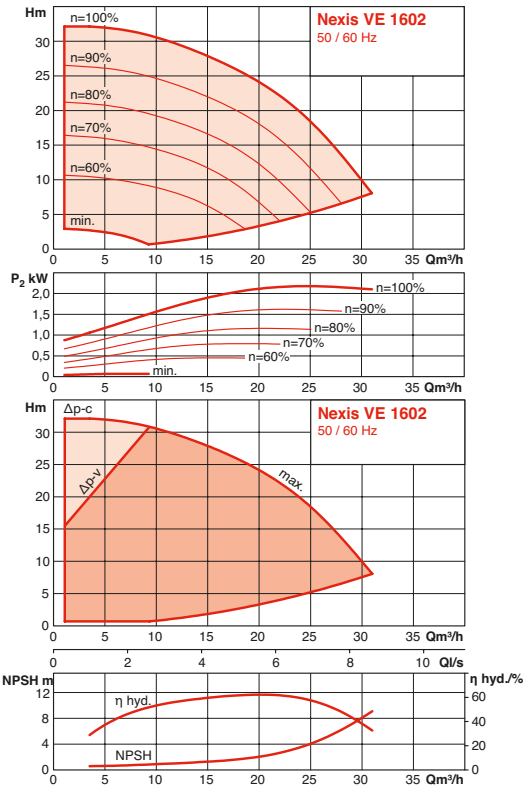

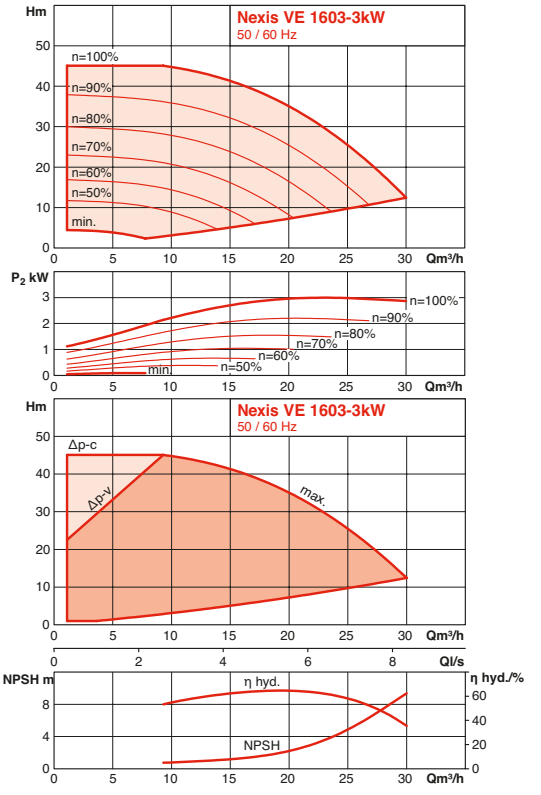

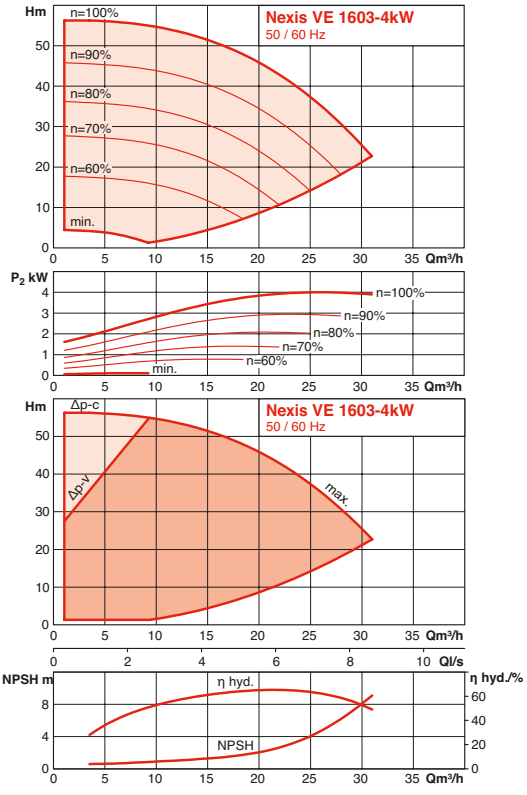

NEXIS VE 2/4/6/10/16/22/36/52

HYDRAULIC PERFORMANCES

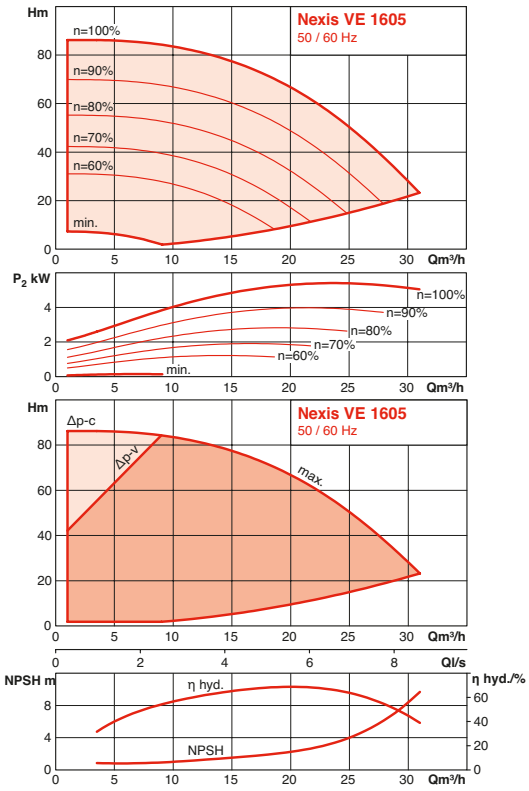

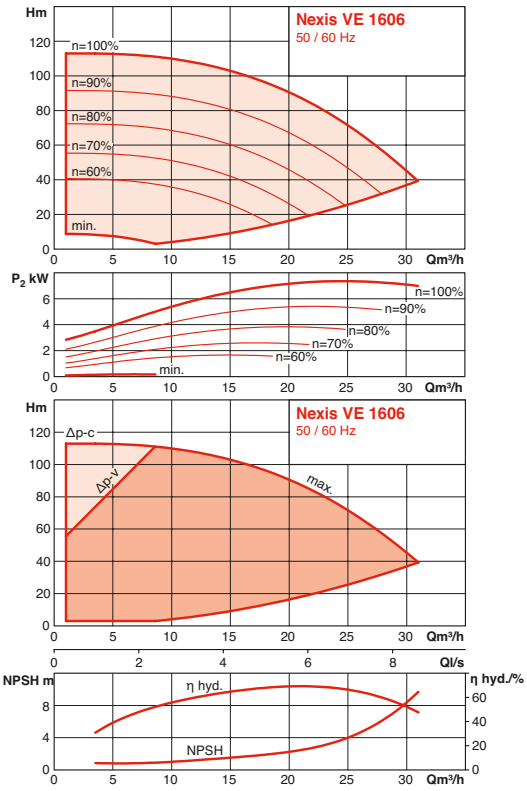

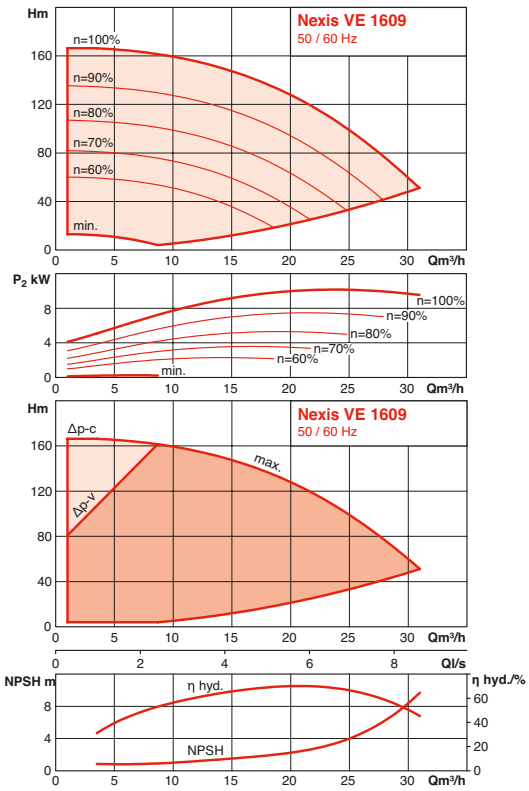

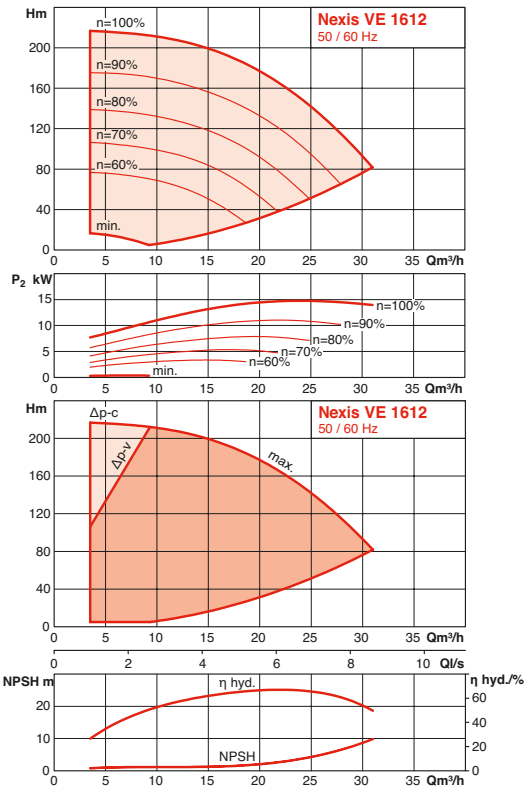

NEXIS VE 2/4/6/10/16/22/36/52

HYDRAULIC PERFORMANCES

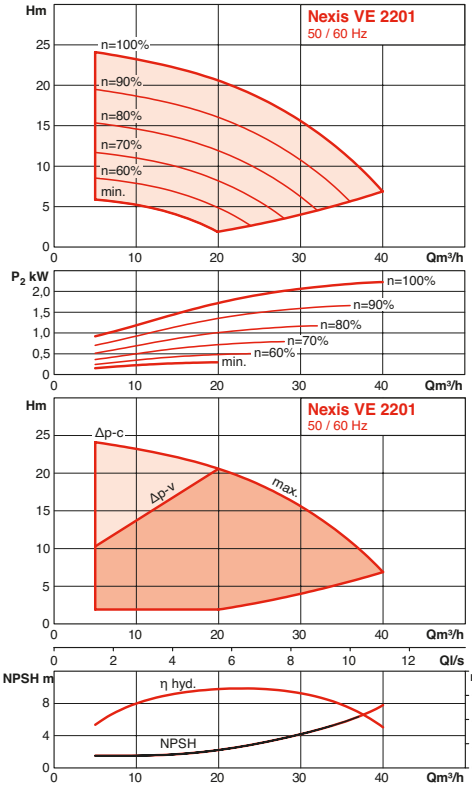

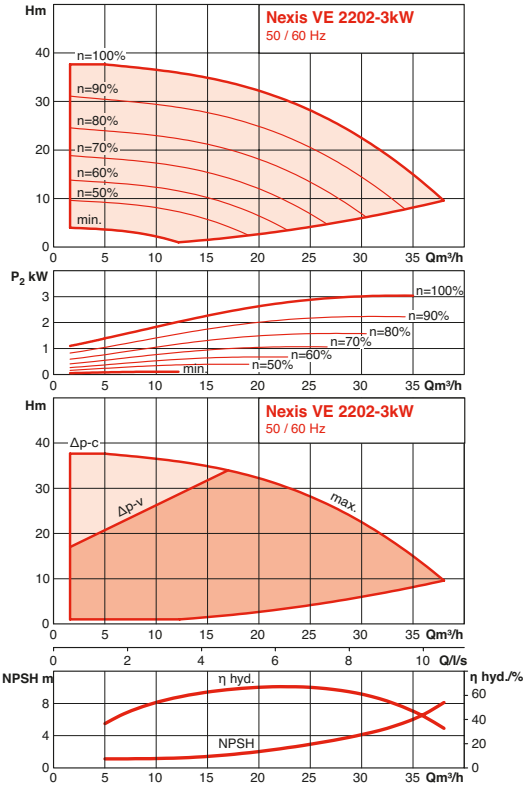

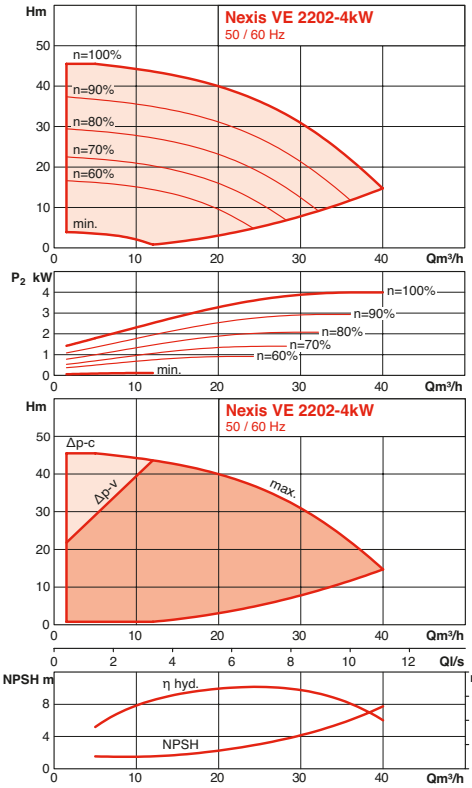

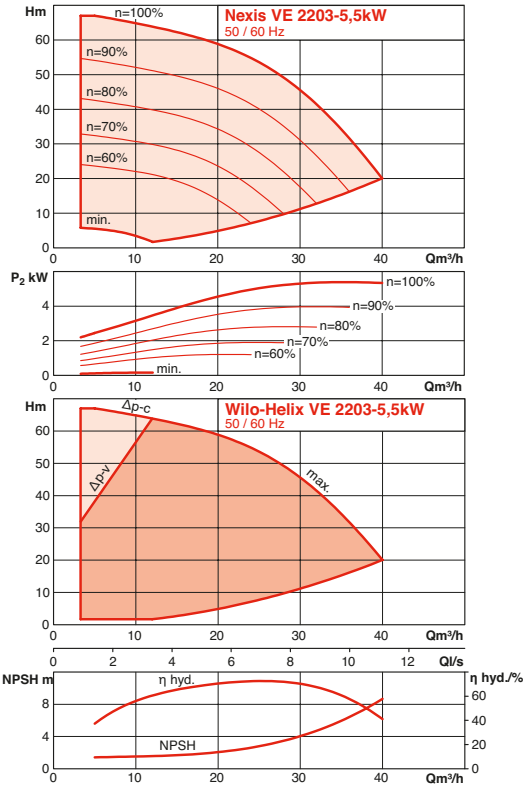

NEXIS VE 2/4/6/10/16/22/36/52

HYDRAULIC PERFORMANCES

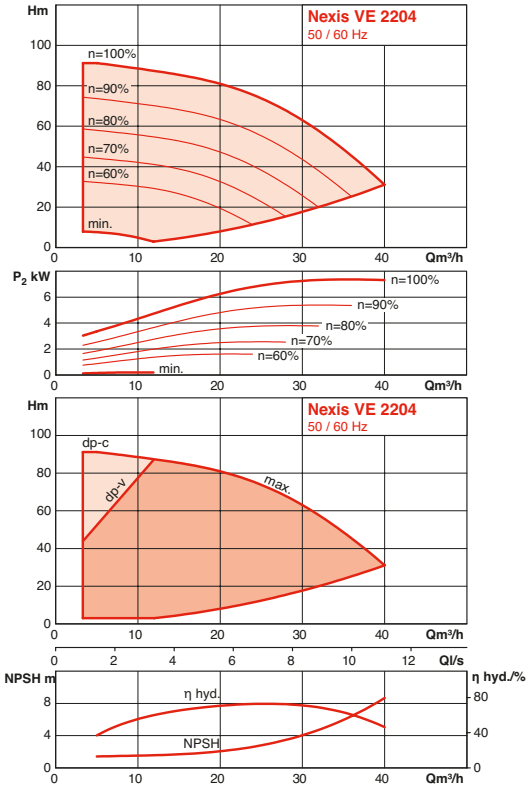

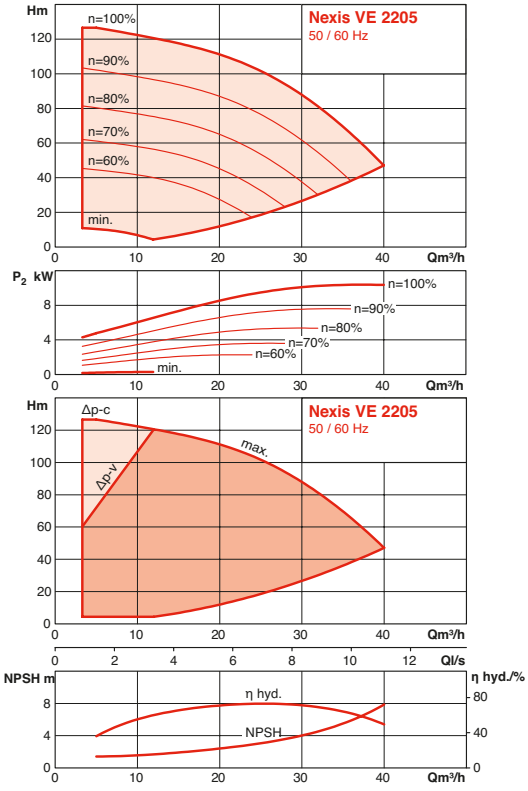

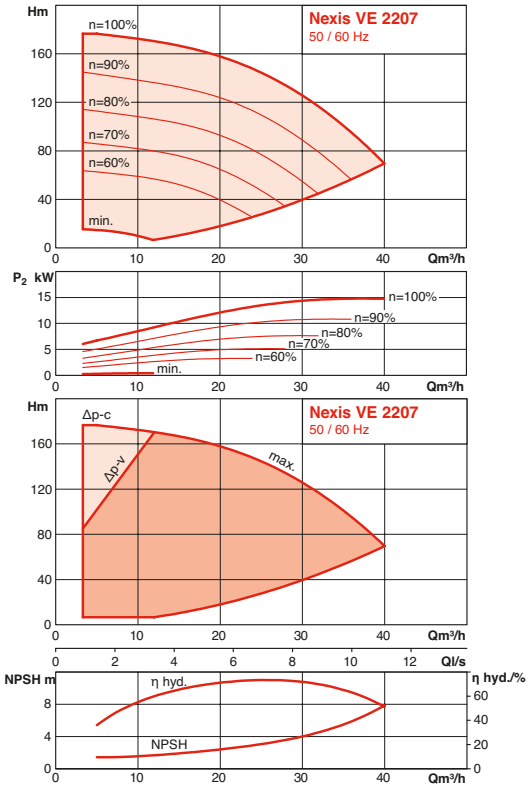

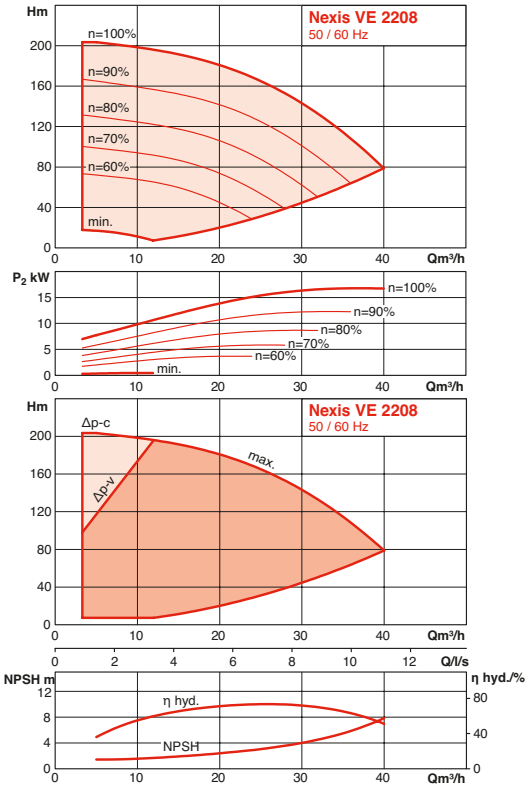

NEXIS VE 2/4/6/10/16/22/36/52

HYDRAULIC PERFORMANCES

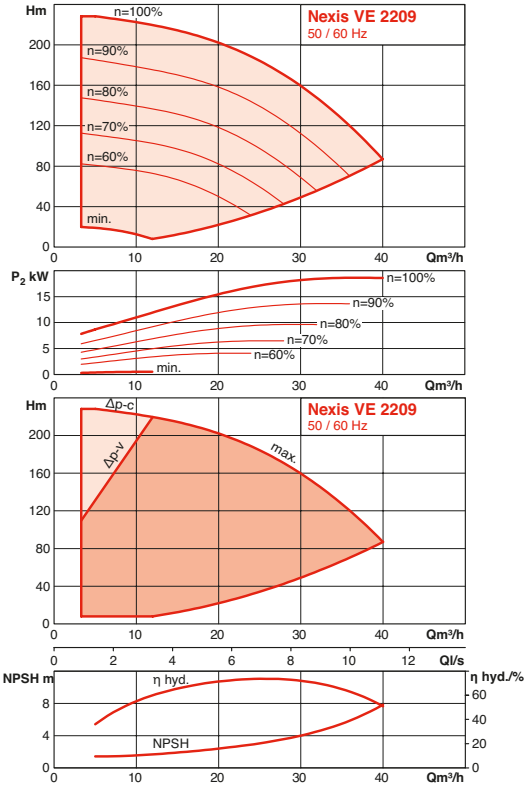

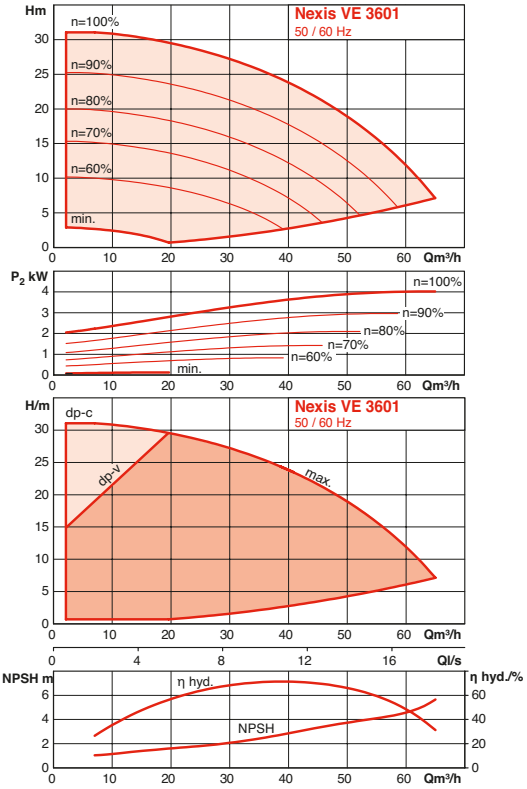

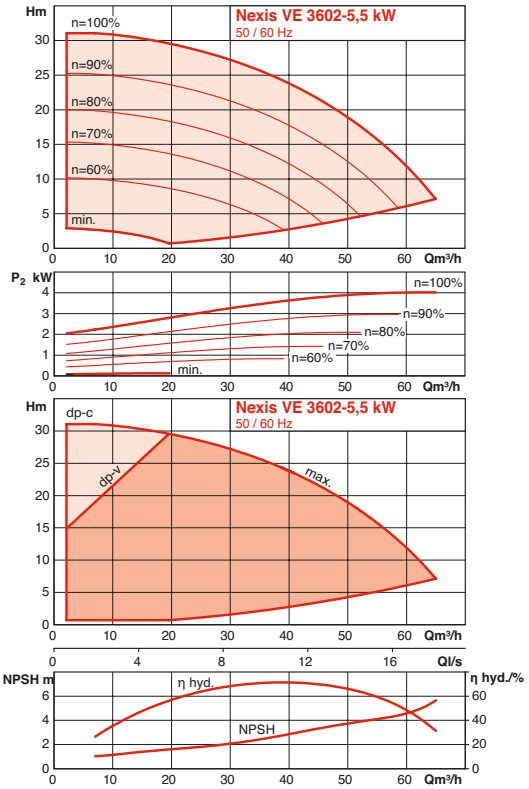

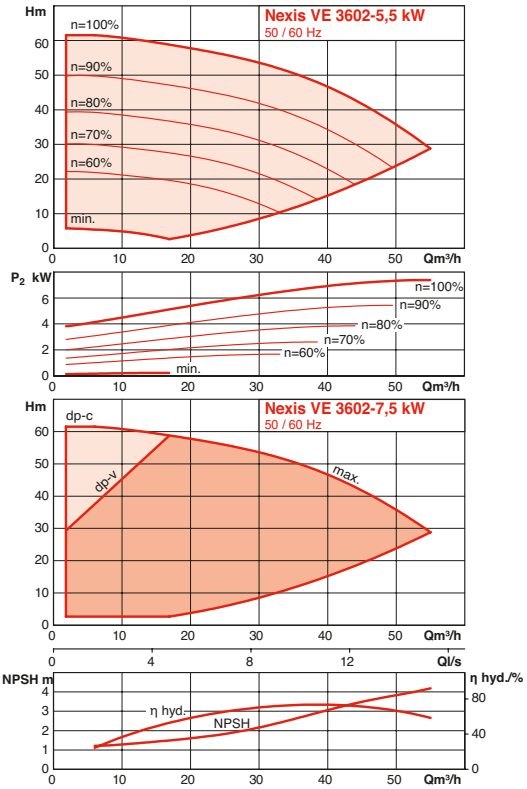

NEXIS VE 2/4/6/10/16/22/36/52

HYDRAULIC PERFORMANCES

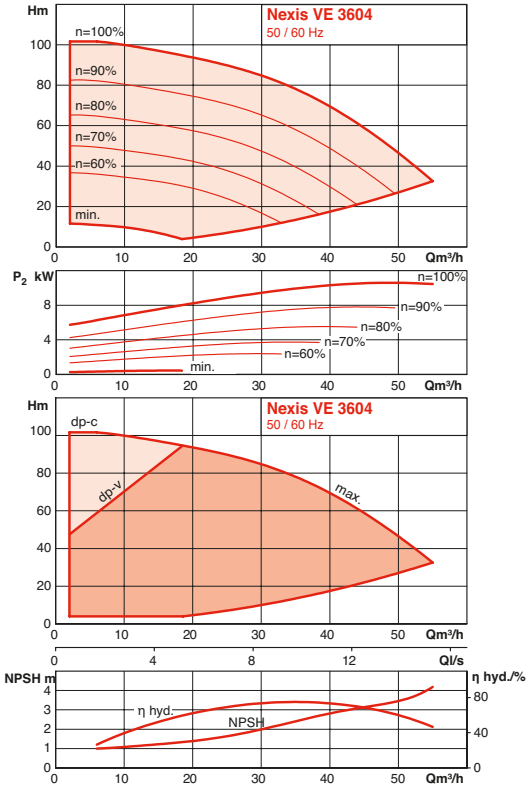

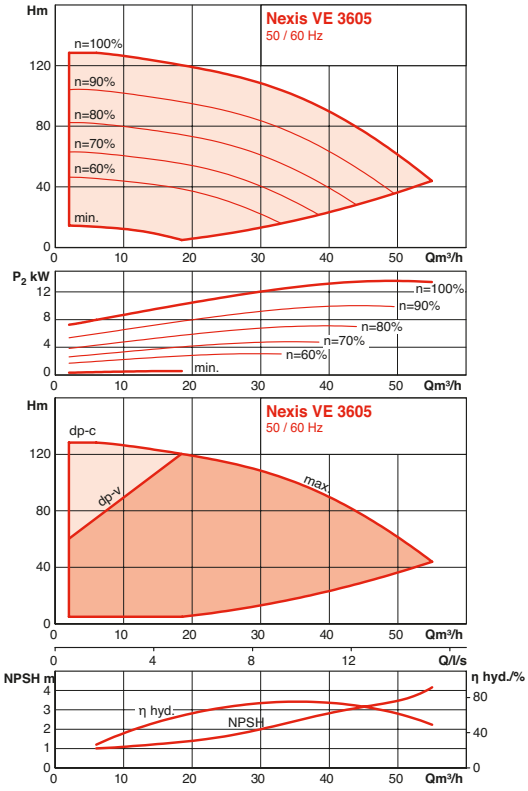

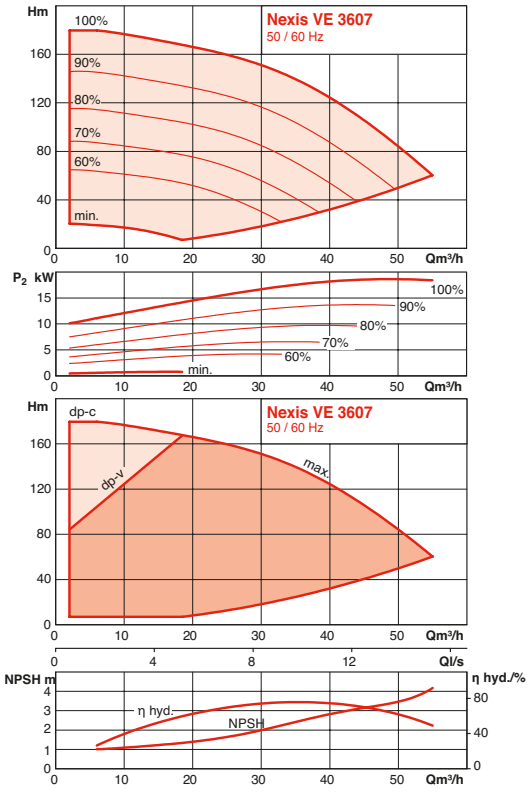

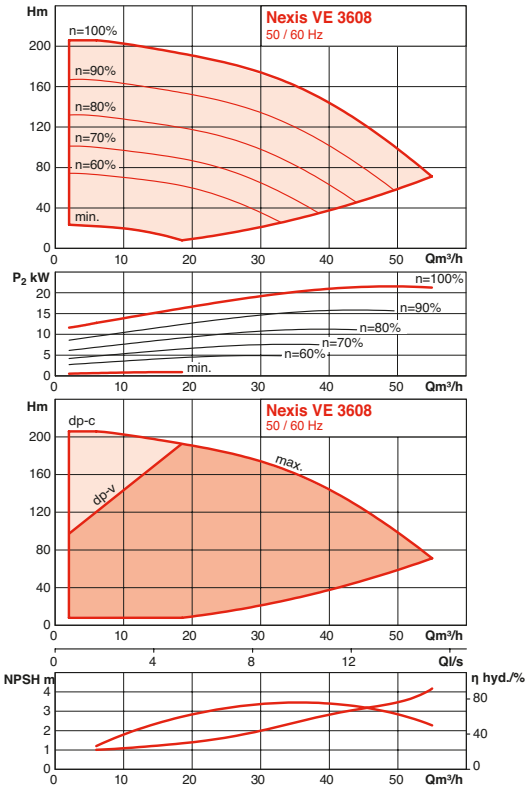

NEXIS VE 2/4/6/10/16/22/36/52

HYDRAULIC PERFORMANCES

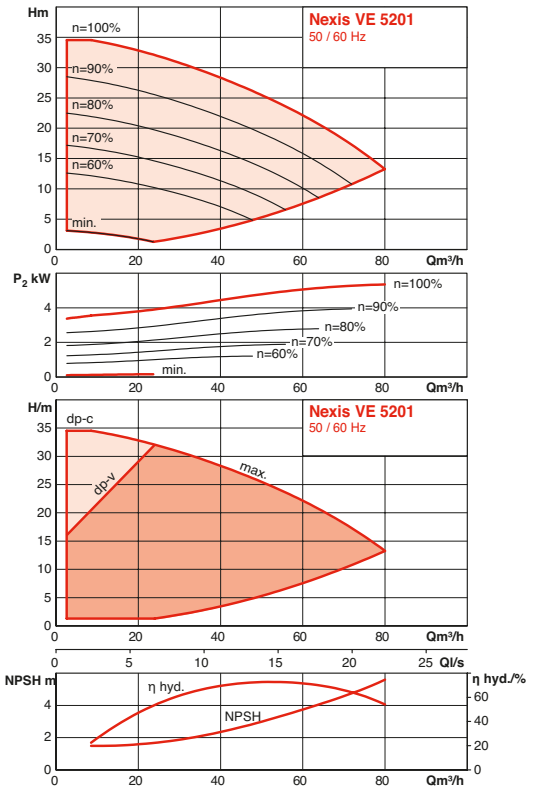

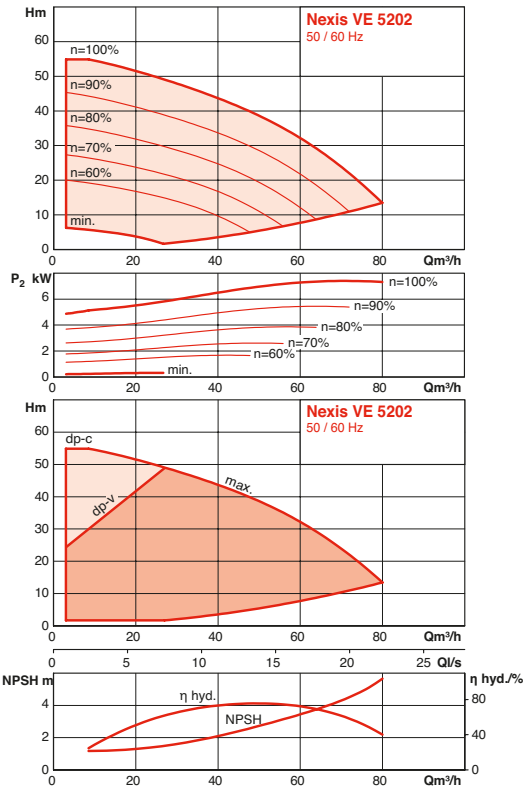

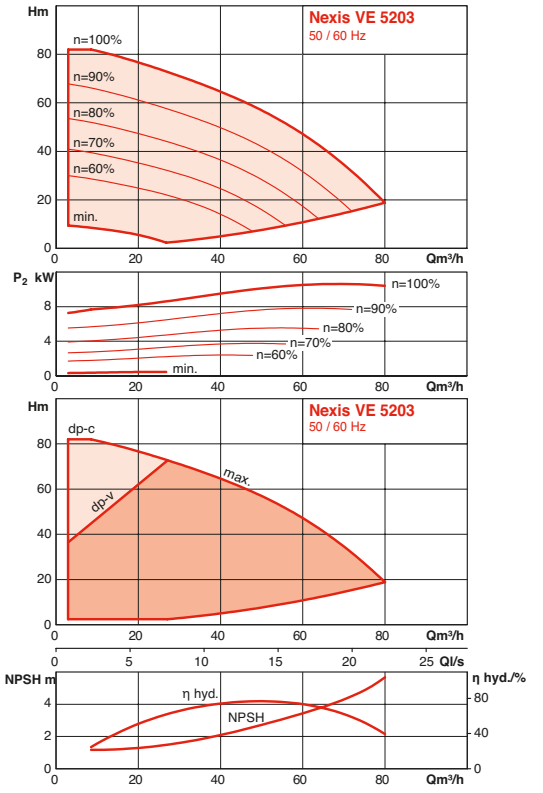

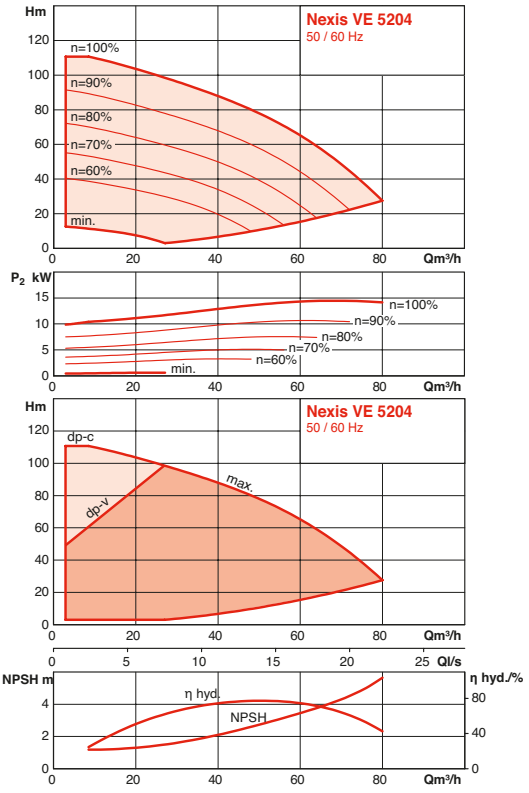

NEXIS VE 2/4/6/10/16/22/36/52

HYDRAULIC PERFORMANCES

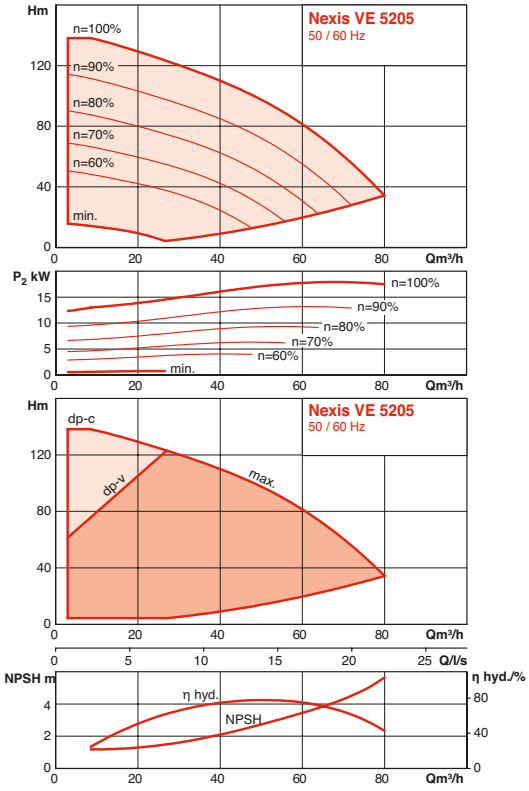

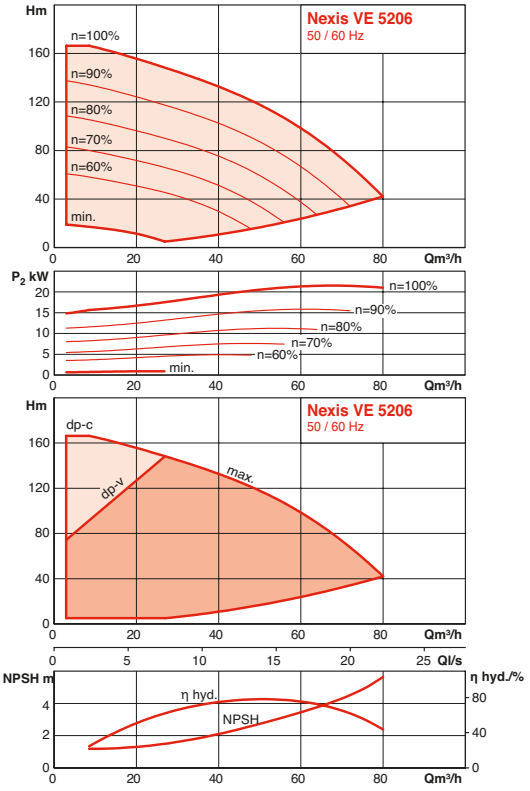

NEXIS VE 2/4/6/10/16/22/36/52

ELECTRICAL AND DIMENSIONAL SPECIFICATIONS - NEXIS VE2

• **PN16 G1 and PN25 DN 25**

MODEL	MOTOR						VARIATOR	FLANGES		DIMENSIONS				MASS	
	Power	Efficiency according to load			Intensity			size	PN	DN	H	H2	ØM	X	Net	Gross
	P2	4/4	3/4	2/4	Tri 400V 50Hz	Tri 380V 60Hz	Tri 440V 60Hz									
	kW		%		mm	mm	mm				mm	mm	mm	mm	kg	kg
NEXIS VE204-FXV/KS	0,55	79	78	74	1.7	1.8	1.6	TL1	25	DN 25	666	442	130	229	33	47
NEXIS VE204-OSE/KS	0,55	79	78	74	1.7	1.8	1.6	TL1	16	G 1	645	421	130	229	31	45
NEXIS VE206-FXV/KS	0,75	79	78	74	3.2	3.4	3.1	TL2	25	DN 25	736	492	146	237	36	50
NEXIS VE206-OSE/KS	0,75	79	78	74	3.2	3.4	3.1	TL2	16	G 1	715	471	146	237	33	47
NEXIS VE208-FSE/KS	1,1	82.5	82	79	3.2	3.2	2.6	TL2	25	DN 25	782	542	146	237	37	51
NEXIS VE208-OSE/KS	1,1	82.5	82	79	3.2	3.2	2.6	TL2	16	G 1	761	521	146	237	34	48
NEXIS VE211-FSE/KS	1,5	84	82	79	5.6	5.8	5.4	TL3	25	DN 25	906	627	193	254	47	66
NEXIS VE211-OSE/KS	1,5	84	82	79	5.6	5.8	5.4	TL3	16	G 1	885	606	193	254	45	59
NEXIS VE216-FSE/KS	2,2	85.5	84	81	5.6	5.7	5.5	TL3	25	DN 25	1036	752	170	254	50	69
NEXIS VE220-FSE/KS	3	87.5	87.5	84.2	9	9.3	8.7	TL4	25	DN 25	1179	862	194	265	73	95
NEXIS VE222-FSE/KS	4	87.5	87.1	84.5	9.7	9.9	9.3	TL4	25	DN 25	1296	962	220	284	74	96

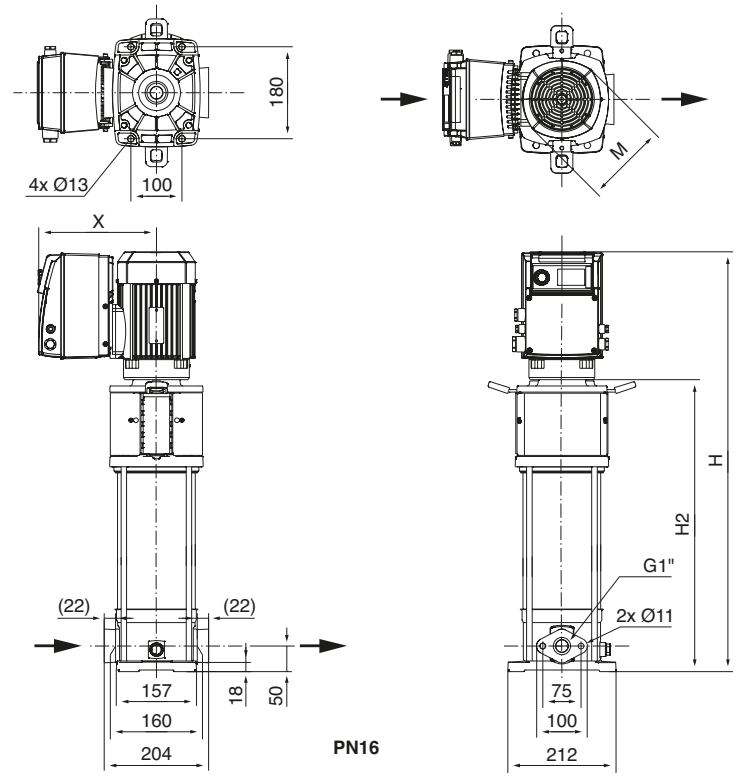

NEXIS VE 2/4/6/10/16/22/36/52

ELECTRICAL AND DIMENSIONAL SPECIFICATIONS - NEXIS VE4

• PN 16 G1 and PN 25 DN 25

MODEL	MOTOR						VARIATOR	FLANGES		DIMENSIONS				MASS	
	Power	Efficiency according to load			Intensity										
	P2	4/4	3/4	2/4	Tri 400V 50Hz	Tri 380V 60Hz	Tri 440V 60Hz	size	PN	DN	H	H2	ØM	X	Net	Gross
	kW		%		mm	mm	mm				mm	mm	mm	mm	kg	kg
NEXIS VE403-FXV/KS	0,55	79	78	74	1.7	1.8	1.6	TL1	25	DN 25	645	421	130	229	32	46
NEXIS VE403-OSE/KS	0,55	79	78	74	1.7	1.8	1.6	TL1	16	G 1	620	396	130	229	30	44
NEXIS VE404-FXV/KS	0,75	79	78	74	3.2	3.4	3.1	TL2	25	DN 25	690	446	146	237	35	49
NEXIS VE404-OSE/KS	0,75	79	78	74	3.2	3.4	3.1	TL2	16	G 1	665	421	146	237	33	47
NEXIS VE405-FXV/KS	1,1	82.5	82	79	3.2	3.2	2.6	TL2	25	DN 25	711	471	146	237	35	49
NEXIS VE405-OSE/KS	1,1	82.5	82	79	3.2	3.2	2.6	TL2	16	G 1	686	446	146	237	33	47
NEXIS VE407-FSE/KS	1,5	84	82	79	5.6	5.8	5.4	TL3	25	DN 25	810	531	193	254	45	59
NEXIS VE407-OSE/KS	1,5	84	82	79	5.6	5.8	5.4	TL3	16	G 1	785	506	193	254	43	57
NEXIS VE410-FSE/KS	2,2	85.5	84	81	5.6	5.7	5.5	TL3	25	DN 25	890	606	170	254	47	66
NEXIS VE410-OSE/KS	2,2	85.5	84	81	5.6	5.7	5.5	TL3	16	G 1	865	581	170	254	45	64
NEXIS VE413-FSE/KS	3	87.5	87.5	84.2	9	9.3	8.7	TL4	25	DN 25	1033	716	194	265	71	93
NEXIS VE418-FSE/KS	4	87.5	87.1	84.5	9.7	9.9	9.3	TL4	25	DN 25	1150	816	220	284	73	95

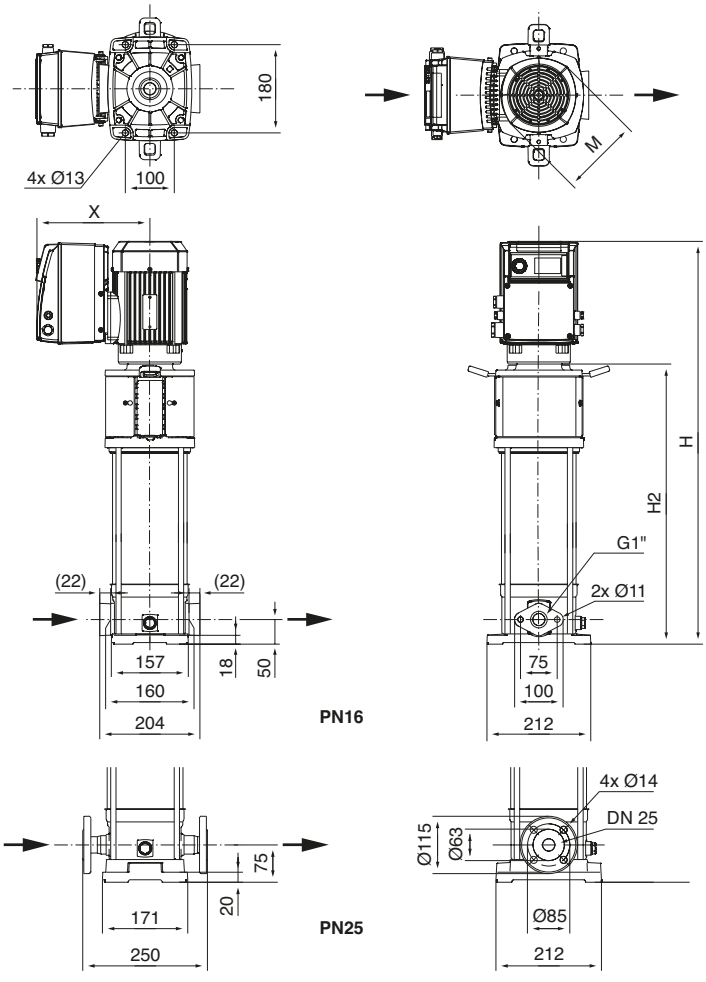

NEXIS VE 2/4/6/10/16/22/36/52

ELECTRICAL AND DIMENSIONAL SPECIFICATIONS - NEXIS VE6

• **PN16 G1¼ and PN25 DN32**

MODEL	MOTOR							VARIATOR	FLANGES		DIMENSIONS				MASS	
	Power	Efficiency according to load			Intensity			size	PN	DN	H	H2	ØM	X	Net	Gross
	P2	4/4	3/4	2/4	Tri 400V 50Hz	Tri 380V 60Hz	Tri 440V 60Hz									
	kW		%		mm	mm	mm				mm	mm	mm	mm	kg	kg
NEXIS VE601-FXV/KS	0,55	79	78	74	1.7	1.8	1.6	TL1	25	DN 32	645	421	130	229	33	47
NEXIS VE601-OSE/KS	0,55	79	78	74	1.7	1.8	1.6	TL1	16	G 1¼	620	396	130	229	31	45
NEXIS VE602-FXV/KS	0,75	79	78	74	3.2	3.4	3.1	TL2	25	DN 32	665	421	146	237	35	49
NEXIS VE602-OSE/KS	0,75	79	78	74	3.2	3.4	3.1	TL2	16	G 1¼	640	396	146	237	33	47
NEXIS VE603-FXV/KS	1,1	82.5	82	79	3.2	3.2	2.6	TL2	25	DN 32	699	459	146	237	36	50
NEXIS VE603-OSE/KS	1,1	82.5	82	79	3.2	3.2	2.6	TL2	16	G 1¼	674	434	146	237	34	48
NEXIS VE604-FXV/KS	1,5	84	82	79	5.6	5.8	5.4	TL3	25	DN 32	785	506	193	254	46	60
NEXIS VE604-OSE/KS	1,5	84	82	79	5.6	5.8	5.4	TL3	16	G 1¼	750	471	193	254	44	58
NEXIS VE606-FSE/KS	2,2	85.5	84	81	5.6	5.7	5.5	TL3	25	DN 32	865	581	170	254	48	67
NEXIS VE606-OSE/KS	2,2	85.5	84	81	5.6	5.7	5.5	TL3	16	G 1¼	840	556	170	254	46	60
NEXIS VE608-FSE/KS	3	87.5	87.5	84.2	9	9.3	8.7	TL4	25	DN 32	983	666	194	265	71	90
NEXIS VE608-OSE/KS	3	87.5	87.5	84.2	9	9.3	8.7	TL4	16	G 1¼	948	631	194	265	69	88
NEXIS VE611-FSE/KS	4	87.5	87.1	84.5	9.7	9.9	9.3	TL4	25	DN 32	1150	816	220	284	74	96
NEXIS VE611-OSE/KS	4	87.5	87.1	84.5	9.7	9.9	9.3	TL4	16	G 1¼	1125	791	220	284	72	94
NEXIS VE615-FSE/K	5,5	88.5	87.8	85.5	11.5	12.1	11	TL5	25	DN 32	1473	1086	262	296	103	153
NEXIS VE619-FSE/K	7,5	89.5	89.5	88.4	14.3	14.6	13	TL5	25	DN 32	1623	1236	262	296	111	161

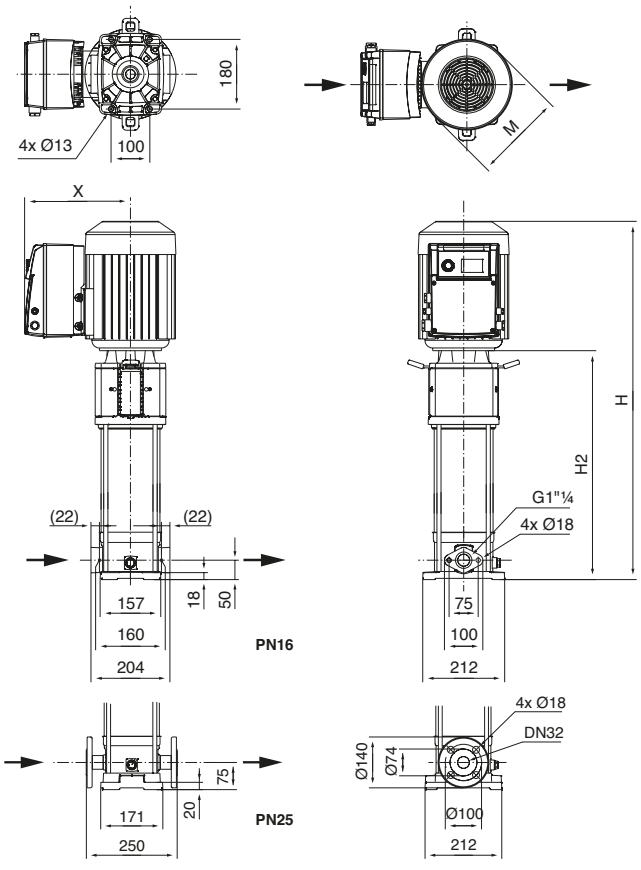

134

ELECTRICAL AND DIMENSIONAL SPECIFICATIONS - NEXIS VE10

• PN16 G1$^{1/2}$ and PN25 DN40

MODEL	MOTOR							VARIATOR	FLANGES		DIMENSIONS				MASS	
	Power	Efficiency according to load			Intensity			size	PN	DN	H	H2	ØM	X	Net	Gross
	P2	4/4	3/4	2/4	Tri 400V 50Hz	Tri 380V 60Hz	Tri 440V 60Hz									
	kW		%		mm	mm	mm				mm	mm	mm	mm	kg	kg
NEXIS VE1001-FXV/KS	0,75	79	78	74	3.2	3.4	3.1	TL2	25	DN 40	661	417	146	237	36	50
NEXIS VE1001-OSE/KS	0,75	79	78	74	3.2	3.4	3.1	TL2	16	G 1½	661	417	146	237	36	50
NEXIS VE1002-FXV/KS	1,1	82.5	82	79	3.2	3.2	2.6	TL2	25	DN 40	657	417	146	237	37	51
NEXIS VE1002-OSE/KS	1,1	82.5	82	79	3.2	3.2	2.6	TL2	16	G 1½	657	417	146	237	37	51
NEXIS VE1003-FXV/KS	1,5	84	82	79	5.6	5.8	5.4	TL3	25	DN 40	744	465	193	254	46	60
NEXIS VE1003-OSE/KS	1,5	84	82	79	5.6	5.8	5.4	TL3	16	G 1½	744	465	193	254	46	60
NEXIS VE1004-FXV/KS	2,2	85.5	84	81	5.6	5.7	5.5	TL3	25	DN 40	786	502	170	254	47	61
NEXIS VE1004-OSE/KS	2,2	85.5	84	81	5.6	5.7	5.5	TL3	16	G 1½	786	502	170	254	47	61
NEXIS VE1005-FSE/KS	3	87.5	87.5	84.2	9	9.3	8.7	TL4	25	DN 40	867	550	194	265	69	83
NEXIS VE1005-OSE/KS	3	87.5	87.5	84.2	9	9.3	8.7	TL4	16	G 1½	867	550	194	265	69	83
NEXIS VE1006-FSE/KS	4	87.5	87.1	84.5	9.7	9.9	9.3	TL4	25	DN 40	921	587	220	284	70	89
NEXIS VE1006-OSE/KS	4	87.5	87.1	84.5	9.7	9.9	9.3	TL4	16	G 1½	921	587	220	284	70	89
NEXIS VE1009-FSE/KS	5,5	88.5	87.8	85.5	11.5	12.1	11	TL5	25	DN 40	1206	819	262	296	100	122
NEXIS VE1009-OSE/KS	5,5	88.5	87.8	85.5	11.5	12.1	11	TL5	16	G 1½	1206	819	262	296	100	122
NEXIS VE1012-FSE/K	7,5	89.5	89.5	88.4	14.3	14.6	13	TL5	25	DN 40	1319	932	262	296	106	128
NEXIS VE1016-FSE/K/2G	11	90.2	88.7	85.3	21.2	22.2	19.5	TL6	25	DN 40	1560	1111	302	398	176	226

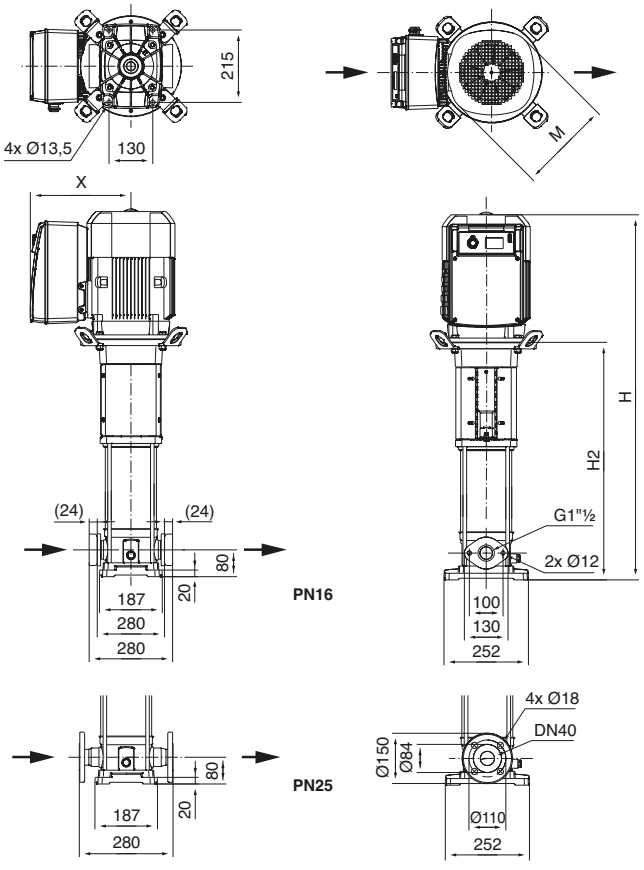

NEXIS VE 2/4/6/10/16/22/36/52

ELECTRICAL AND DIMENSIONAL SPECIFICATIONS - NEXIS VE16

• **PN16 G2 and PN25 DN50**

MODEL	MOTOR							VARIATOR	FLANGES		DIMENSIONS				MASS	
	Power	Efficiency according to load			Intensity			size	PN	DN	H	H2	ØM	X	Net	Gross
	P2	4/4	3/4	2/4	Tri 400V 50Hz	Tri 380V 60Hz	Tri 440V 60Hz									
	kW		%		mm	mm	mm				mm	mm	mm	mm	kg	kg
NEXIS VE1601-FXV/KS	1,1	82.5	82	79	3.2	3.2	2.6	TL2	25	DN 50	696	452	146	237	36	50
NEXIS VE1601-OSE/KS	1,1	82.5	82	79	3.2	3.2	2.6	TL2	16	G 2	696	452	146	237	36	50
NEXIS VE1602-FXV/KS	2,2	85.5	84	81	5.6	5.7	5.5	TL3	25	DN 50	746	462	170	254	45	59
NEXIS VE1602-OSE/KS	2,2	85.5	84	81	5.6	5.7	5.5	TL3	16	G 2	746	462	170	254	45	59
NEXIS VE1603-3.0-FXV/KS	3	87.5	87.5	84.2	9	9.3	8.7	TL4	25	DN 50	839	522	194	265	68	82
NEXIS VE1603-3.0-OSE/KS	3	87.5	87.5	84.2	9	9.3	8.7	TL4	16	G 2	839	522	194	265	68	82
NEXIS VE1603-4.0-FSE/KS	4	87.5	87.1	84.5	9.7	9.9	9.3	TL4	25	DN 50	856	522	220	284	68	87
NEXIS VE1603-4.0-OSE/KS	4	87.5	87.1	84.5	9.7	9.9	9.3	TL4	16	G 2	856	522	220	284	68	87
NEXIS VE1605-FSE/K	5,5	88.5	87.8	85.5	11.5	12.1	11	TL5	25	DN 50	1119	739	262	296	96	118
NEXIS VE1605-OSE/K	5,5	88.5	87.8	85.5	11.5	12.1	11	TL5	16	G 2	1119	739	262	296	96	118
NEXIS VE1606-FSE/K	7,5	89.5	89.5	88.4	14.3	14.6	13	TL5	25	DN 50	1169	789	262	296	101	123
NEXIS VE1606-OSE/K	7,5	89.5	89.5	88.4	14.3	14.6	13	TL5	16	G 2	1169	789	262	296	101	123
NEXIS VE1609-FSE/K/2G	11	90.2	88.7	85.3	21.2	22.2	19.5	TL6	25	DN 50	1435	969	302	398	170	192
NEXIS VE1609-FXV/K	11	90.2	88.7	85.3	21.2	22.2	19.5	TL6	25	DN 50	1435	969	302	398	170	192
NEXIS VE1612-FSE/K/2G	15	90.6	89.7	87	25.4	26.6	23.3	TL6	25	DN 50	1587	1121	302	398	173	223

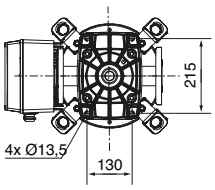

TL4/5

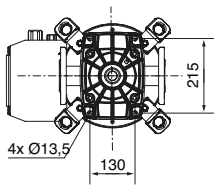

TL6/7

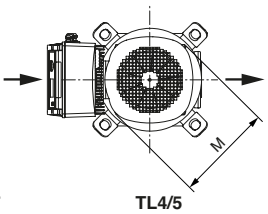

TL6/7 TL4/5

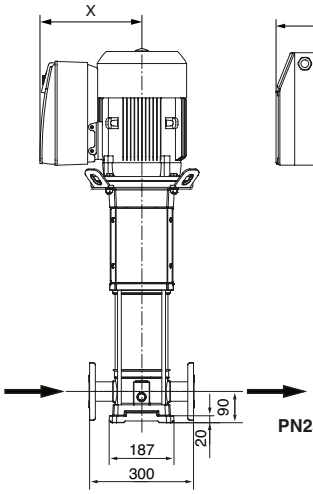

PN25

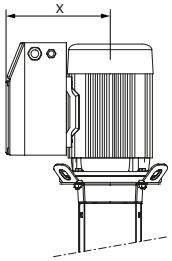

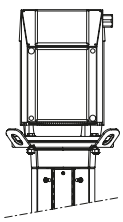

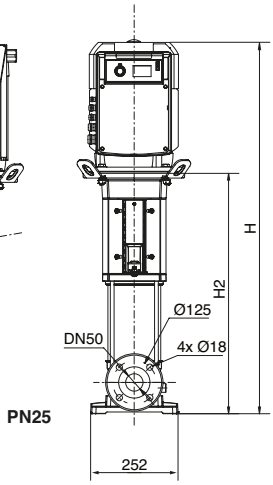

PN25

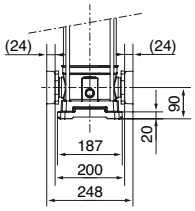

PN16

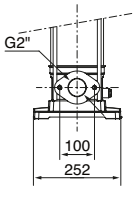

PN16

NEXIS VE 2/4/6/10/16/22/36/52

ELECTRICAL AND DIMENSIONAL SPECIFICATIONS - NEXIS VE22

• PN16 DN50 and PN25 DN50

MODEL	MOTOR							VARIATOR	FLANGES		DIMENSIONS				MASS	
	Power	Efficiency according to load			Intensity			size	PN	DN	H	H2	ØM	X	Net	Gross
	P2	4/4	3/4	2/4	Tri 400V 50Hz	Tri 380V 60Hz	Tri 440V 60Hz									
	kW		%		mm	mm	mm				mm	mm	mm	mm	kg	kg
NEXIS VE2201-OGE/KS	2,2	85.5	84	81	5.6	5.7	5.5	TL3	16	DN 50	825	541	170	254	66	80
NEXIS VE2202-3.0-OGE/KS	3	87.5	87.5	84.2	9	9.3	8.7	TL4	16	DN 50	868	551	194	265	90	104
NEXIS VE2202-4.0-OGE/KS	4	87.5	87.1	84.5	9.7	9.9	9.3	TL3/TL4	16	DN 50	885	551	220	284	77	99
NEXIS VE2203-FGE/K	5,5	88.5	87.8	85.5	11.5	12.1	11	TL5	25	DN 50	1097	717	262	296	114	136
NEXIS VE2203-OGE/K	5,5	88.5	87.8	85.5	11.5	12.1	11	TL5	16	DN 50	1097	717	262	296	114	136
NEXIS VE2204-FGE/K	7,5	89.5	89.5	88.4	14,3	14.6	13	TL5	25	DN 50	1147	767	262	296	121	143
NEXIS VE2204-OGE/K	7,5	89.5	89.5	88.4	14,3	14.6	13	TL5	16	DN 50	1147	767	262	296	121	143
NEXIS VE2205-FGE/K	11	90.2	88.7	85.3	21.2	22.2	19.5	TL6	25	DN 50	1313	847	302	398	193	215
NEXIS VE2205-FGE/K/2G	11	90.2	88.7	85.3	21.2	22.2	19.5	TL6	25	DN 50	1313	847	302	398	193	215
NEXIS VE2205-OGE/K/2G	11	90.2	88.7	85.3	21.2	22.2	19.5	TL6	16	DN 50	1313	847	302	398	193	215
NEXIS VE2207-FGE/K/2G	15	90.6	89.7	87	25.4	26.6	23.3	TL6	25	DN 50	1413	947	302	398	196	218
NEXIS VE2208-FGE/K/2G	18,5	91.1	90.6	89.4	33.6	34.9	30.5	TL7	25	DN 50	1463	997	302	398	211	261
NEXIS VE2209-FGE/K/2G	22	91	89.7	86.8	43.9	46.2	40	TL7	25	DN 50	1513	1047	302	398	214	264
NEXIS VE2209-FXV/K/2G	22	91	89.7	86.8	43.9	46.2	40	TL7	25	DN 50	1513	1047	302	398	214	264

TL3/4

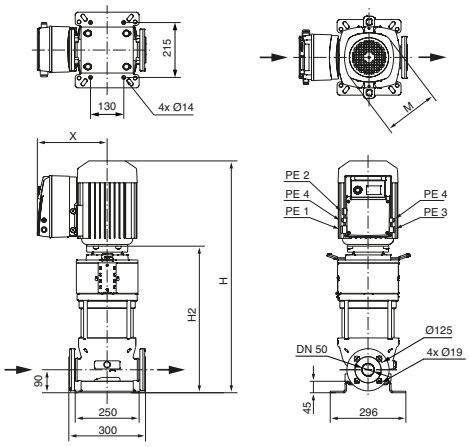

TL5

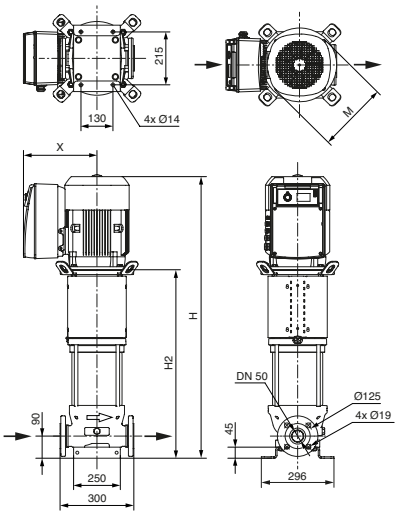

TL6/7

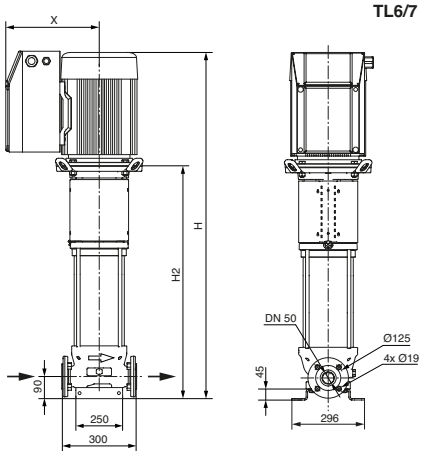

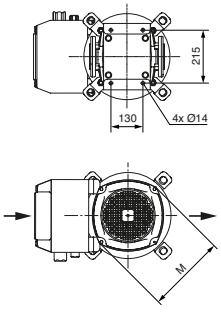

NEXIS VE 2/4/6/10/16/22/36/52

ELECTRICAL AND DIMENSIONAL SPECIFICATIONS - NEXIS VE22 MONOBLOC

• **PN16 DN50**

MODEL	MOTOR							VARIATOR	FLANGES		DIMENSIONS				MASS	
	Power	Efficiency according to load			Intensity			size	PN	DN	H	H2	ØM	X	Net	Gross
	P2	4/4	3/4	2/4	Tri 400V 50Hz	Tri 380V 60Hz	Tri 440V 60Hz									
	kW	%			mm	mm	mm				mm	mm	mm	mm	kg	kg
NEXIS VE2202-3.0-ODE/S	3	87.5	87.5	84.2	9	9.3	8.7	TL4	16	DN 50	750	433	194	265	89	103
NEXIS VE2202-4.0-ODE/S	4	87.5	87.1	84.5	9.7	9.9	9.3	TL3/TL4	16	DN 50	767	433	220	284	89	103
NEXIS VE2203-ODE/S-FF240	5.5	88.5	87.8	85.5	11.5	12.1	11	TL5	16	DN 50	883	503	262	296	108	127
NEXIS VE2204-ODE/S-FF240	5.5	88.5	87.8	85.5	11.5	12.1	11	TL5	16	DN 50	933	553	262	296	114	133
NEXIS VE2205-ODE/KS/2G	5.5	88.5	87.8	85.5	11.5	12.1	11	TL5	16	DN 50	1248	782	262	296	222	244

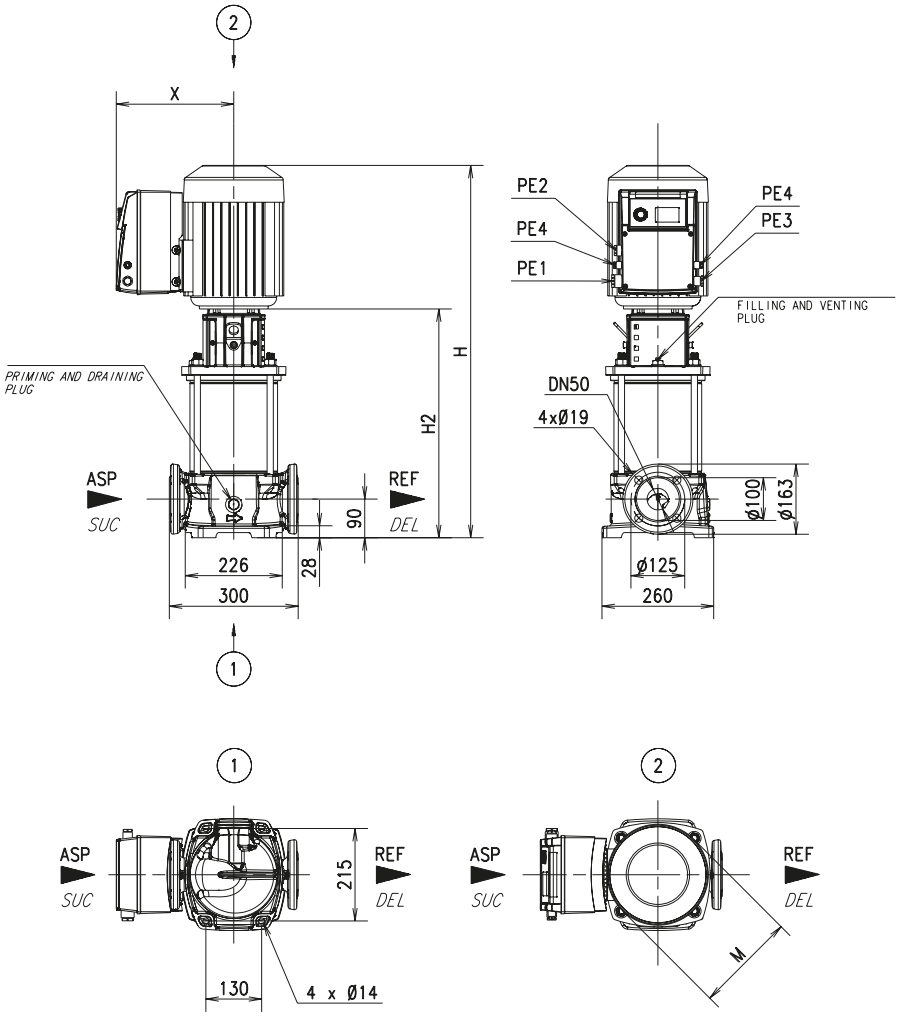

ELECTRICAL AND DIMENSIONAL SPECIFICATIONS - NEXIS VE36

• **PN16 DN65 and PN25 DN65**

MODEL	MOTOR							VARIATOR	FLANGES		DIMENSIONS				MASS	
	Power	Efficiency according to load			Intensity			size	PN	DN	H	H2	ØM	X	Net	Gross
	P2	4/4	3/4	2/4	Tri 400V 50Hz	Tri 380V 60Hz	Tri 440V 60Hz									
	kW		%		mm	mm	mm				mm	mm	mm	mm	kg	kg
NEXIS VE3601-OGE/KS	4	87.5	87.1	84.5	9.7	9.9	9.3	TL3/TL4	16	DN 65	866	532	220	284	81	100
NEXIS VE3602-5,5-OGE/K	5,5	87.6	88.6	88.3	11.5	12.1	11	TL5	16	DN 65	1095	715	262	296	121	143
NEXIS VE3602-7,5-OGE/K	7,5	89.5	89.5	88.4	14,3	14.6	13	TL5	16	DN 65	1095	715	262	296	125	147
NEXIS VE3604-FGE/K/2G	11	90.5	90.2	88.8	21.2	22.2	19.5	TL6	25	DN 65	1344	878	302	398	206	228
NEXIS VE3604-OGE/K/2G	11	90.5	90.2	88.8	21.2	22.2	19.5	TL6	16	DN 65	1344	878	302	398	206	228
NEXIS VE3605-FGE/K/2G	15	90.7	91.1	90.6	25.4	26.6	23.3	TL6	25	DN 65	1411	945	302	398	215	237
NEXIS VE3605-OGE/K/2G	15	90.7	91.1	90.6	25.4	26.6	23.3	TL6	16	DN 65	1411	945	302	398	215	237
NEXIS VE3607-FGE/K/2G	18,5	91.4	91.8	91.2	33.6	34.9	30.5	TL7	25	DN 65	1544	1078	302	398	235	285
NEXIS VE3608-FGE/K/2G	22	91.7	91	86	43.9	46.2	40	TL7	25	DN 65	1611	1145	302	398	240	290

TL5

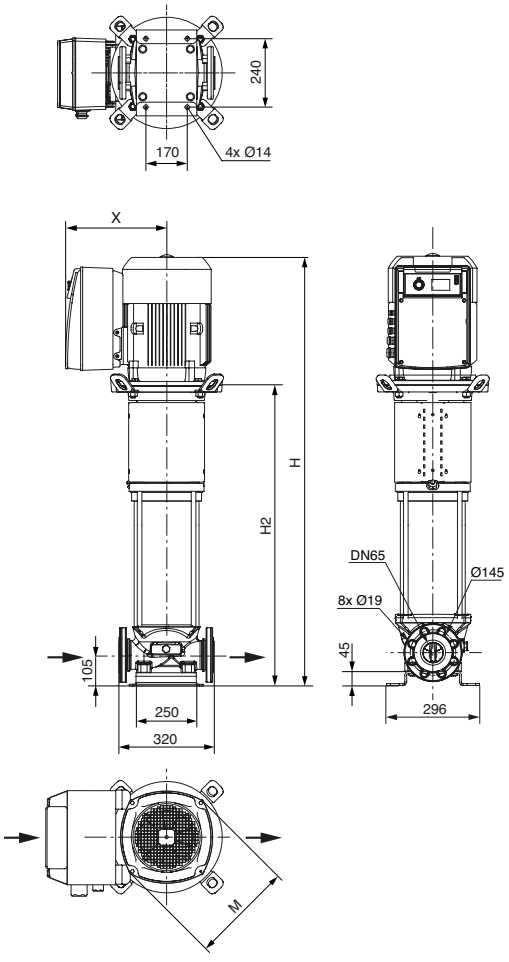

TL6/7

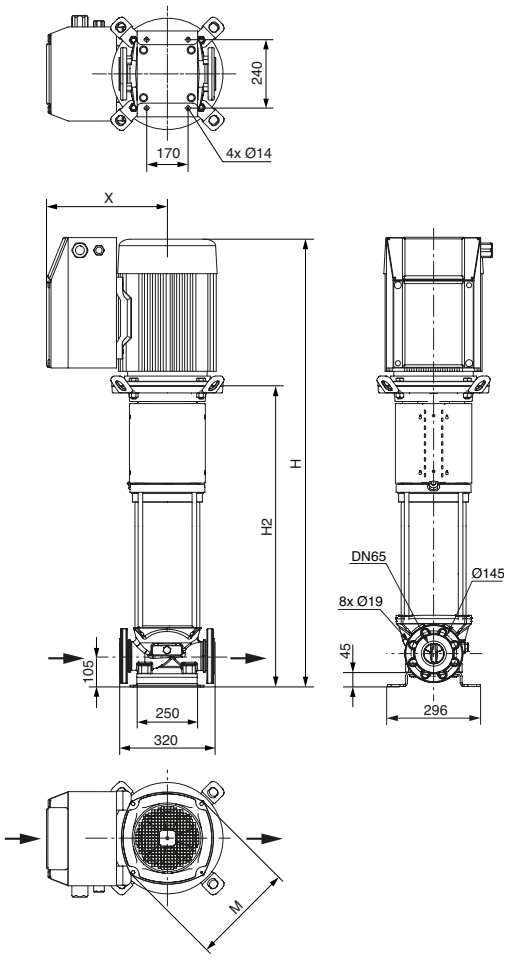

NEXIS VE 2/4/6/10/16/22/36/52

ELECTRICAL AND DIMENSIONAL SPECIFICATIONS - NEXIS VE36 MONOBLOC

• **PN16 DN65**

MODEL	MOTOR							VARIATOR	FLANGES		DIMENSIONS				MASS	
	Power	Efficiency according to load			Intensity			size	PN	DN	H	H2	ØM	X	Net	Gross
	P2	4/4	3/4	2/4	Tri 400V 50Hz	Tri 380V 60Hz	Tri 440V 60Hz									
	kW	%			mm	mm	mm				mm	mm	mm	mm	kg	kg
NEXIS VE3602-5,5-ODE/S-FF240	5.5	88.5	87.8	85.5	11.5	12.1	11	TL5	16	DN 65	886	506	262	296	113	132
NEXIS VE3602-7,5-ODE/S-FF240	7.5	89.5	89.5	88.4	14.3	14.6	13	TL5	16	DN 65	886	506	262	296	117	136
NEXIS VE3604-ODE/KS/2G	11	90.5	90.2	88.8	21.2	22.2	19.5	TL6	16	DN 65	1284	818	302	398	228	250
NEXIS VE3605-ODE/KS/2G	15	90.6	89.7	87	25.4	26.6	23.3	TL6	16	DN 65	1351	885	302	398	233	255

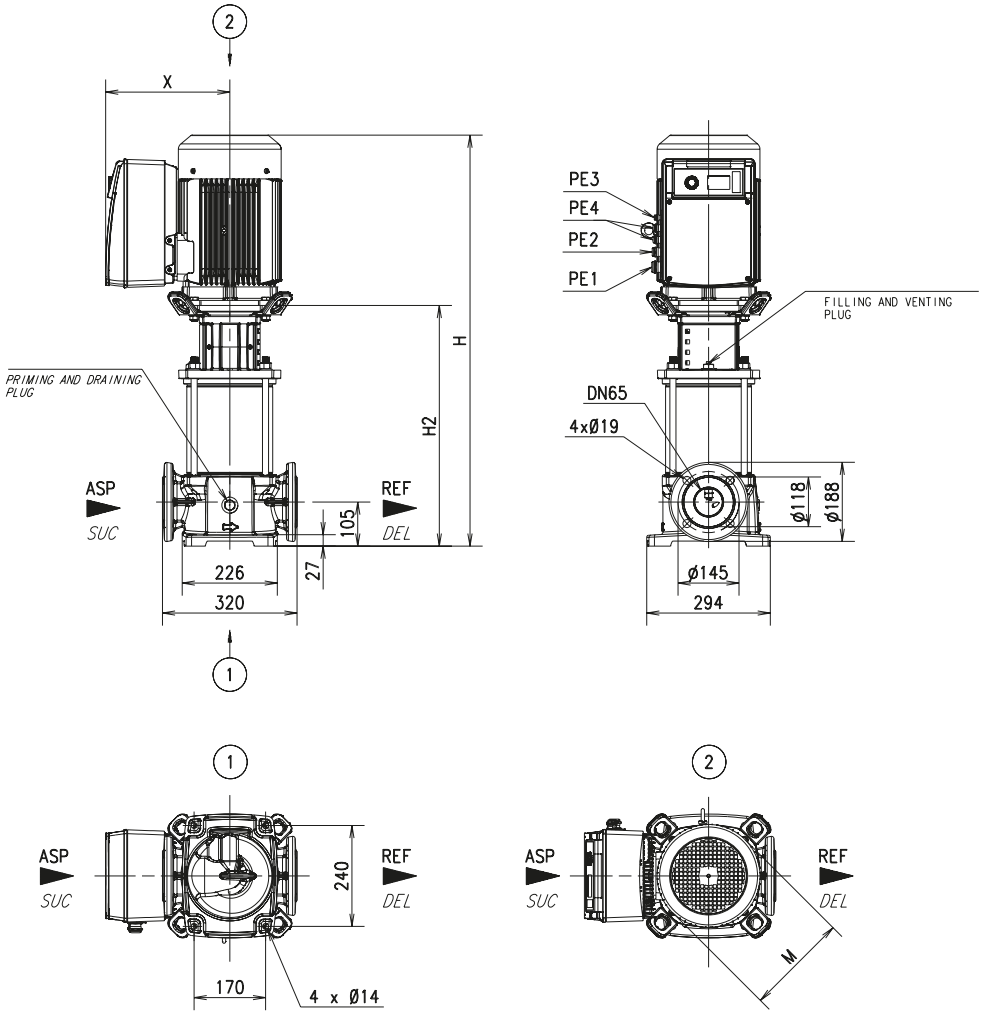

ELECTRICAL AND DIMENSIONAL SPECIFICATIONS - NEXIS VE52

• PN16 DN80 and PN25 DN80

MODEL	MOTOR							VARIATOR	FLANGES		DIMENSIONS				MASS	
	Power	Efficiency according to load			Intensity			size	PN	DN	H	H2	ØM	X	Net	Gross
	P2	4/4	3/4	2/4	Tri 400V 50Hz	Tri 380V 60Hz	Tri 440V 60Hz									
	kW		%		mm	mm	mm				mm	mm	mm	mm	kg	kg
NEXIS VE5201-OGE/K	5,5	88.5	87.8	85.5	11.5	12.1	11	TL5	16	DN 80	1063	683	262	296	129	151
NEXIS VE5202-OGE/K	7,5	88.1	88.6	87.1	14,3	14.6	13	TL5	16	DN 80	1163	783	262	296	139	161
NEXIS VE5203-FGE/K/2G	11	90.5	90.2	88.8	21.2	22.2	19.5	TL6	25	DN 80	1379	913	302	398	217	239
NEXIS VE5203-OGE/K/2G	11	90.5	90.2	88.8	21.2	22.2	19.5	TL6	16	DN 80	1379	913	302	398	217	239
NEXIS VE5204-FGE/K/2G	15	90.7	91.1	90.6	25.4	26.6	23.3	TL6	25	DN 80	1474	1013	302	398	227	277
NEXIS VE5204-OGE/K/2G	15	90.7	91.1	90.6	25.4	26.6	23.3	TL6	16	DN 80	1479	1013	302	398	227	277
NEXIS VE5205-FGE/K	18,5	91.4	91.8	91.2	33.6	34.9	30.5	TL7	25	DN 80	1579	1113	302	398	242	292
NEXIS VE5205-FGE/K/2G	18,5	91.4	91.8	91.2	33.6	34.9	30.5	TL7	25	DN 80	1579	1113	302	398	242	292
NEXIS VE5205-FXV/K/2G	18,5	91.4	91.8	91.2	33.6	34.9	30.5	TL7	25	DN 80	1579	1113	302	398	242	292
NEXIS VE5205-OGE/K/2G	18,5	91.4	91.8	91.2	33.6	34.9	30.5	TL7	16	DN 80	1579	1113	302	398	242	292
NEXIS VE5206-FGE/K/2G	22	91.7	91	86	43.9	46.2	40	TL7	25	DN 80	1679	1213	302	398	246	296

TL5

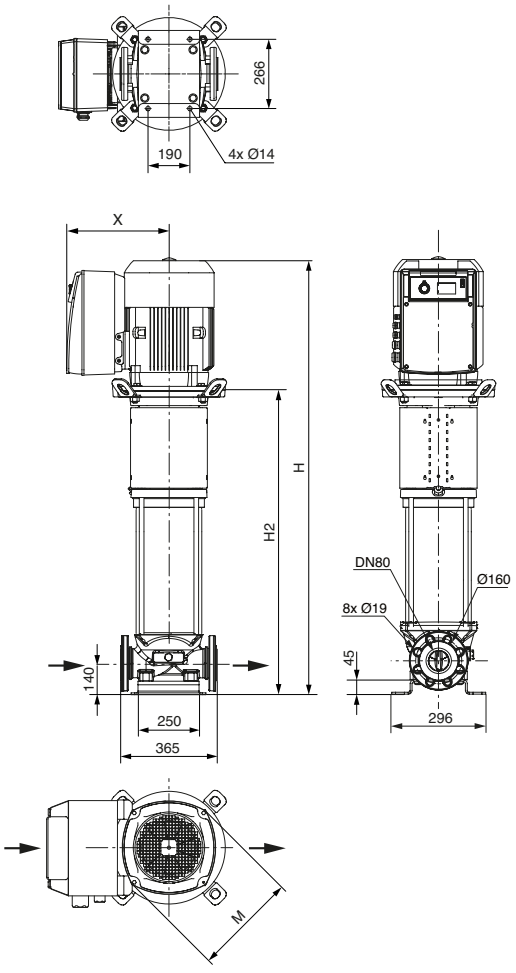

TL6/7

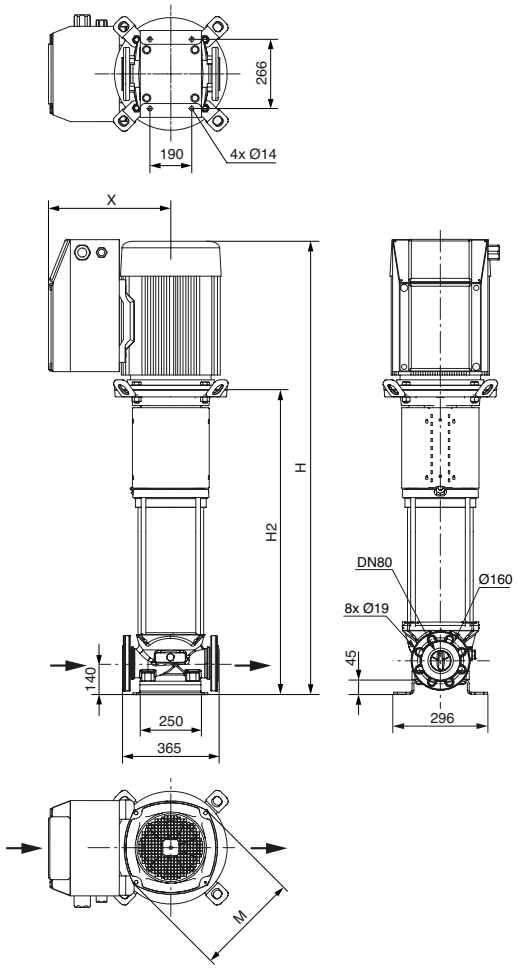

NEXIS VE 2/4/6/10/16/22/36/52

ELECTRICAL AND DIMENSIONAL SPECIFICATIONS - NEXIS VE52 MONOBLOC

• PN16 DN80 et PN25 DN80

MODEL	MOTOR							VARIATOR	FLANGES		DIMENSIONS				MASS	
	Power	Efficiency according to load			Intensity			size	PN	DN	H	H2	ØM	X	Net	Gross
	P2	4/4	3/4	2/4	Tri 400V 50Hz	Tri 380V 60Hz	Tri 440V 60Hz									
	kW		%		mm	mm	mm				mm	mm	mm	mm	kg	kg
NEXIS VE5202-ODE/S-FF240	7.5	89.5	89.5	88.4	14.3	14.6	13	TL5	16	DN 80	983	603	262	296	131	150
NEXIS VE5203-ODE/KS/2G	11	90.5	90.2	88.8	21.2	22.2	19.5	TL6	16	DN 80	1348	882	302	398	234	256
NEXIS VE5204-ODE/KS/2G	15	90.6	89.7	87	25.4	26.6	23.3	TL6	16	DN 80	1448	982	302	398	244	266
NEXIS VE5205-ODE/KS/2G	18.5	91.1	90.6	89.4	33.6	34.9	30.5	TL7	16	DN 80	1548	1082	302	398	261	311

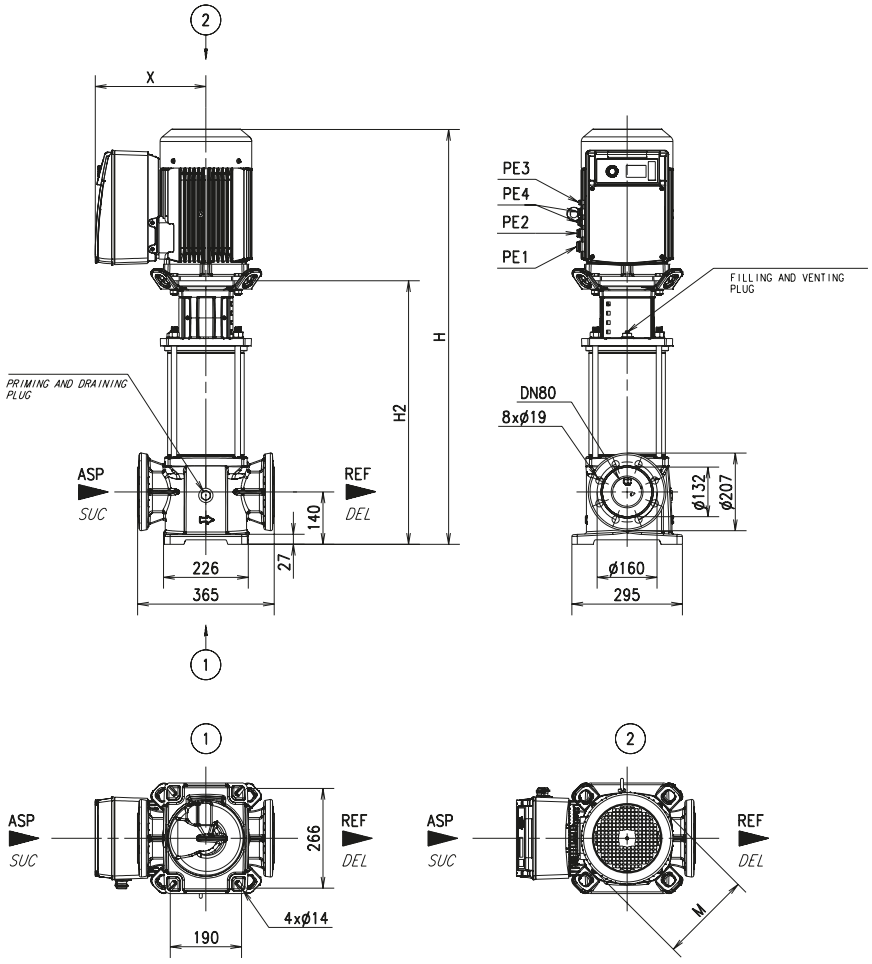

FEATURES

a) Electrical

– 3~ 380V / 440V - 50/ 60 hz, tolerance ± 6%.

b) Fitting

– Installation in an easily accessible place. For heavy pumps, provide a hoisting hook on the pump axis to allow for easy dismantling.
– Mounting on a > 10cm tall concrete block, fixing by anchor bolts.
– Pump axis always horizontal.

Connection to the system using «Victaulic» quick connectors or backflanges.

c) Packaging

- Oval-flanged pumps: supplied with cast-iron oval back flanges for screw-on pipe, gaskets and bolts.
- Round-flanged pumps: supplied with gaskets and bolts, without backflanges (optional).

RECOMMENDED ACCESSORIES

- Shut-off valves
- Screw-on or weld-on back flanges (steel or stainless steel).
- Vibration-damping sleeves.
- Bladder or galvanised tank
- Surge tank
- Non-return valves (with cone or flap, with spring if operating in Mode 2).
- Strainer foot valve
- Low-water protection kit (Mode 1).
- Regulating pressure sensor kit



• Pressure sensor kit 10 bar stainless steel

MAIN ACCESSORIES

Order reference	Pump type	Designation
4048063	Nexis VE 2204 Nexis VE 3602 Nexis VE 5202	Pressure sensor kit 6 bar stainless steel
4048064	Nexis VE 1605	Pressure sensor kit 10 bar stainless steel
4048065	Nexis VE 1606	Pressure sensor kit 16 bar stainless steel

NEXIS ADVENS

STAINLESS STEEL VERTICAL MULTISTAGE PUMPS HIGH-EFFICIENCY

with integral ESV* Série In-line series - 50/60 Hz

2 ranges: 304 and 316L stainless steel

*** Electronic Speed Variation**

OPERATING RANGES

Flow rates of up to:	**80 m³/h**
Manometric heads of up to:	**240 m**
Max. delivery pressure:	**16 and 25 bar**
Max. intake pressure:	**10 bar**
Temperature range:	**- 20° to +120°C****
Max. ambient temperature:	**+ 50°C**
DN of ports:	**25 to 80**
Reference MEI*:	**≥ 0,70**

*Minimum Efficiency Index

** selon garniture mécanique et joint

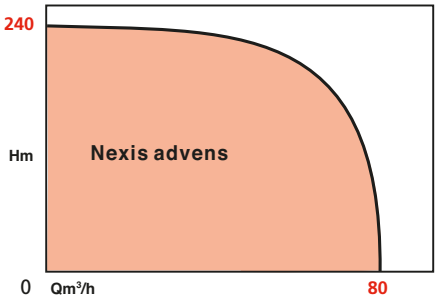

APPLICATIONS

Pumping of clean, non-muddy liquids in the housing, agricultural and industrial sectors.

- Water distribution and pressure boosting.
- Irrigation.
- Industrial circulation systems.
- Process water.
- Cooling water circuits.
- Fire extinguishing systems.
- Washing stations.

ADVANTAGES

ENERGY SAVINGS
- **Synchronous, high-efficiency motor (above IE4) with permanent magnets.**
- **Continuous adjustment of pump performance.**
- **2D/3D high-efficiency hydraulics.**

EASY INSTALLATION
- **Hoisting rings.**
- **Smaller footprint**
- **One electrical connection and two hydraulic connections.**

EASY MAINTENANCE
- **Self-diagnosis messages displayed on LCD screen.**
- **Standardised mechanical seal and cartridge withstand max. temperatures of +120°C without any maintenance.**
- **Spacer for easier removal for seal from 5.5 kW.**

PUMP PROTECTION
- **Flexibility of use with smoother operation and less water hammer.**
- **Built-in protection against low water.**
- **Built-in thermal protection with automatic reset.**

• Nexis advens 8”



• Nexis advens 6”



EVS

Certified ACS

NEXIS ADVENS

DESIGN

-High-efficiency, multi-stage non-self-priming pump with CE motor, made entirely of stainless steel; vertical version, equipped with synchronous motor technology with permanent magnets and in-line connectors
-Impellers, diffusers and stage housing made of corrosion-resistant material

TECHNICAL SPECIFICATIONS

Electrical connection:	3~400V/460 V (±10 %), 50/60 Hz, 3~380 V (±10 %), 60 Hz
Average temperature range:	
• Nexis advens 2 – 16 (EPDM) :	-20 à 120 °C
• Nexis advens 2 – 16 (FKM) :	-15 à 90 °C
• Nexis advens 22 – 36 (EPDM) :	-20 à 120 °C
• Nexis advens 22 – 36 for corrosive fluids (FKM) :	-15 à 90 °C (-30 à 120 °C with EPDM gasket on request)
Max. operating pressure:	16/25 bar
Protection class:	IP55
Max. ambient temperature:	+50°C (extended temperature ranges on request)
Available versions:	Nexis advens 2 – 16 : PN 16 with oval flanges and PN 25 with round flanges conforming to ISO 2531 and ISO 7005 Nexis advens 22 – 36 : PN 16 et PN 25 with round flanges conforming to ISO 2531 and ISO 7005

MATERIALS

Nexis advens 2,4,6,10,16

Standard version	For corrosive fluids
Impellers, stage housing and diffusers made of 1.4307 stainless steel	Impellers, stage housing and diffusers made of 1.4404 stainless steel.
Pump housing made of 1.4301 stainless steel	Pump housing made of 1.4404 stainless steel
Baseplate and lantern ring made of EN-GJL-250 (KTL coating Electroplated steel base on anti-vibration pads	Baseplate and lantern ring made of EN-GJL-250 (KTL coating Electroplated steel base on anti-vibration pads
Shaft made of 1.4301 or 1.4462 stainless steel (according to version)	Shaft made of 1.4404 or 1.4462 stainless steel (according to version)
Bush under mechanical seal made of 1.4404 stainless steel	Bush under mechanical seal made of 1.4404 stainless steel
EPDM O-ring (FKM gasket on request)	EPDM O-ring (FKM gasket on request)
Pump housing made of 1.4301 stainless steel	Pump housing made of 1.4404 stainless steel

Nexis advens 22, 36, 52

Standard version	For corrosive fluids
Impellers, stage housing and diffusers made of 1.4307 stainless steel	Impellers, stage housing and diffusers made of 1.4404 stainless steel with passivation for max. corrosion resistance
Pump housing made of EN-GJL 250 grey cast iron with a KTL coating, separate flanges made of EN-GJS 400 for models 36	Pump housing: all parts in contact with the fluid are made of 1.4409 cast stainless steel; separate flanges made of EN-GL 250 grey cast iron with a KTL coating for Nexis Advens 22/EN-GJS 400 for models 36-52
Electroplated steel base on anti-vibration pads	Electroplated steel base on anti-vibration pads
Shaft made of 1.4057 stainless steel	Shaft made of 1.4404 stainless steel
Bush under mechanical seal made of 1.4404 stainless steel	Sleeve under mechanical seal made of 1.4404 stainless steel
EPDM O-ring (FKM gasket on request)	EPDM O-ring (FKM gasket on request)
Protective tube made of 1.4301 stainless steel	Pressure sleeve made of 1.4404 stainless steel.

IDENTIFICATION

NEXIS ADVENS 4 14 / 2 - FSE / KS

Vertical, multi-stage
in-line pump with high hydraulic efficiency

Equipped with a
high-efficiency drive
(motor/variable-speed controller)

Nominal flowrate (at 50 Hz / 2 poles)

Total number of impellers

Number of trimmed impellers

Maximum pump pressure
F = PN16 flanges
O = PN25 flanges

S = 304 stainless steel pump housing + 304 stainless steel hydraulics
X = 316L stainless steel pump housing + 316L stainless steel hydraulics
G = GJL-250 cast iron pump housing + 304 stainless steel hydraulics

E = O-rings: EPDM + mechanical seal EPDM
V = O-rings: (Viton) + mechanical seal FKM (Viton)

KS = cartridge seal + «system» orientation

NEXIS ADVENS

SECTIONAL DRAWING NEXIS ADVENS 2, 4, 6, 10, 16

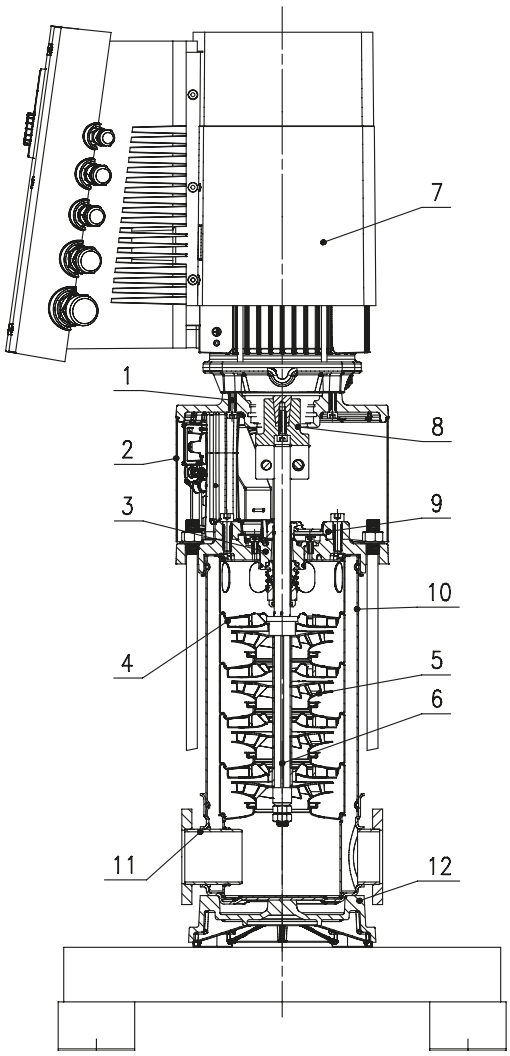

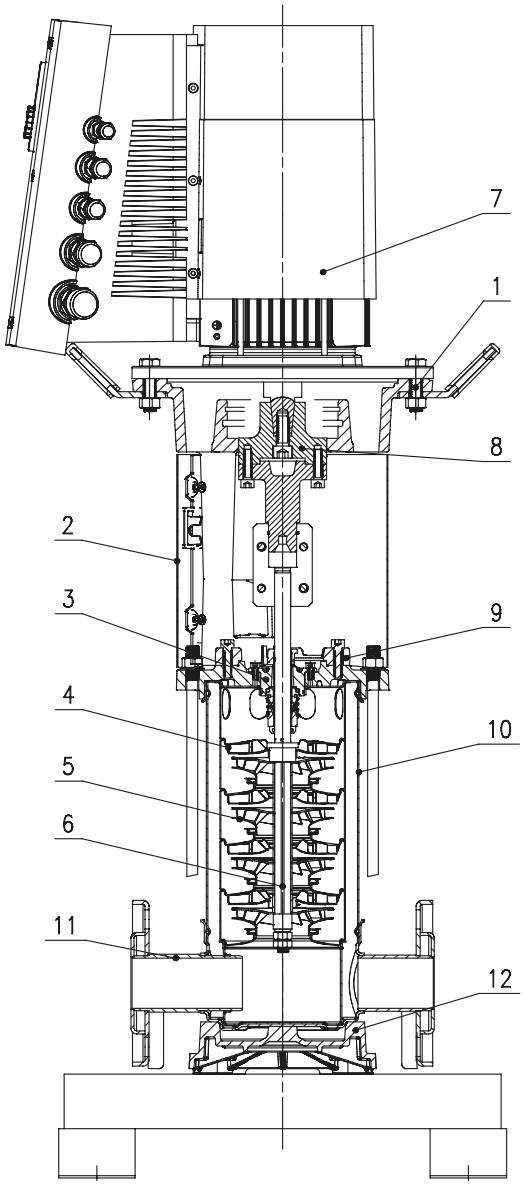

KEY

01 - Motor attachment bolt
02 - Coupling guard
03 - Mechanical seal cartridge
04 - Hydraulic stages
05 - Impellers
06 - Pump shaft
07 - Motor
08 - Coupling
09 - Lantern ring
10 - Pipe sleeve
11 - Flange
12 - Pump housing

SECTIONAL DRAWING NEXIS ADVENS 22, 36

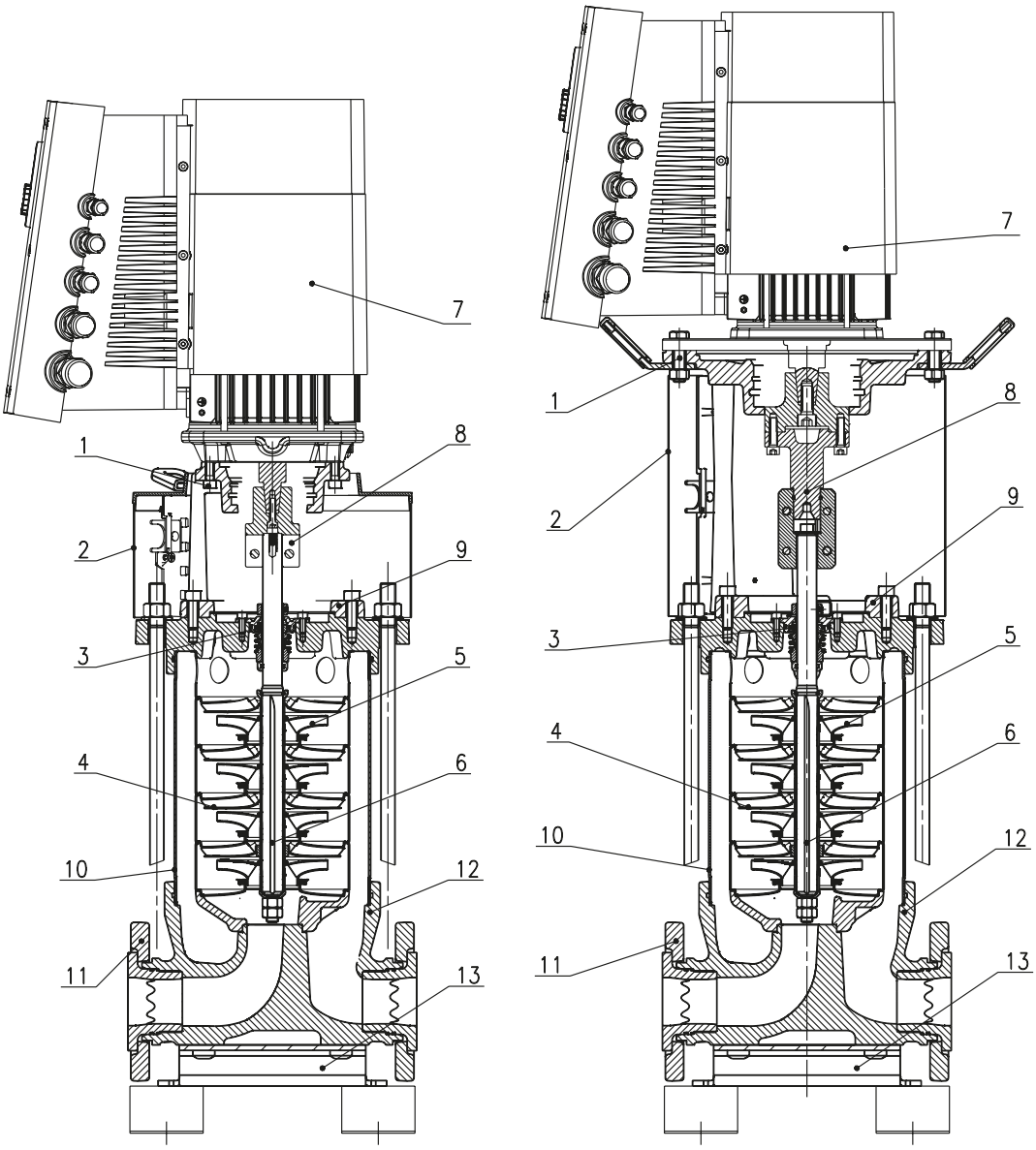

KEY

01 - Motor attachment bolt
02 - Coupling guard
03 - Mechanical seal cartridge
04 - Hydraulic stages
05 - Impellers
06 - Pump shaft
07 - Motor
08 - Coupling
09 - Lantern ring
10 - Pipe sleeve
11 - Flange
12 - Pump housing
13 - Sole plate

NEXIS ADVENS

NEXIS ADVENS - GENERAL PRESELECTION CHART

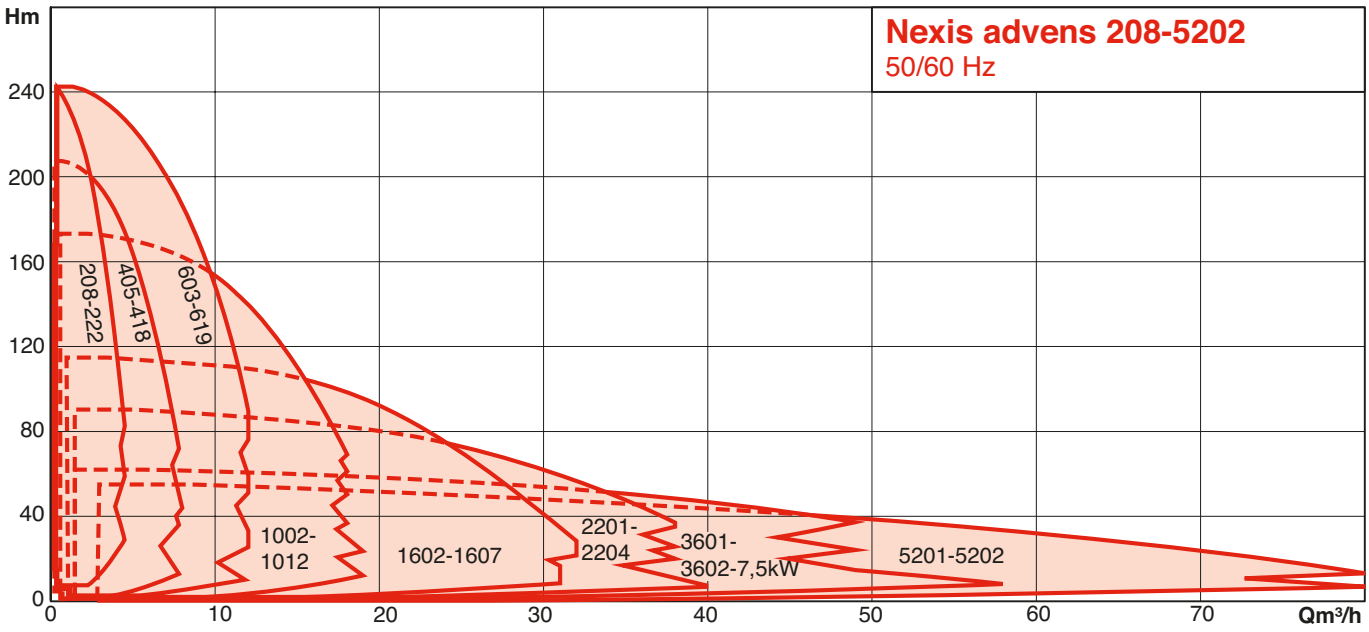

HYDRAULICS PERFORMANCES - NEXIS ADVENS

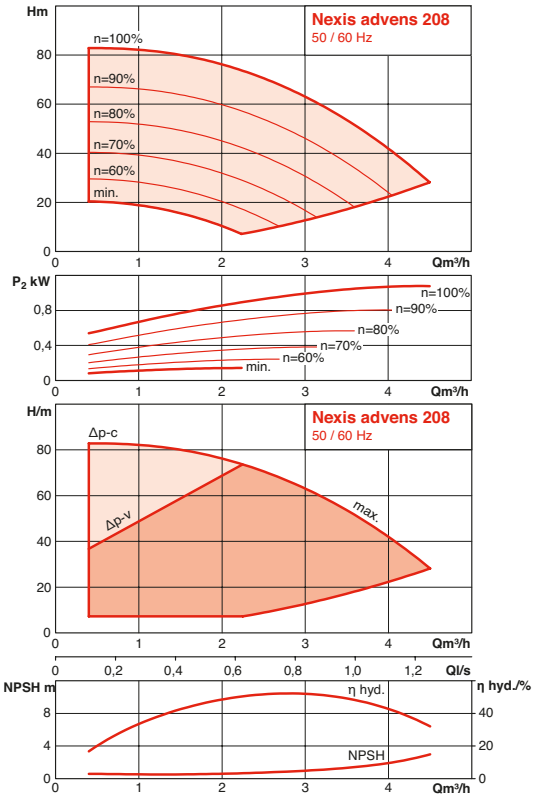

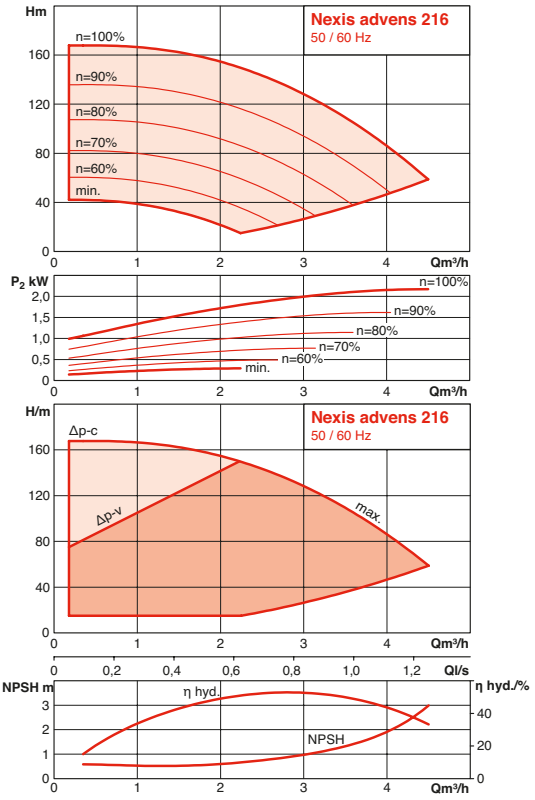

HYDRAULICS PERFORMANCES - NEXIS ADVENS

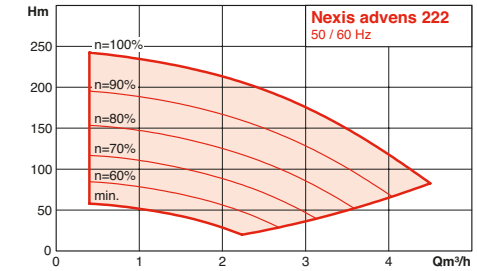

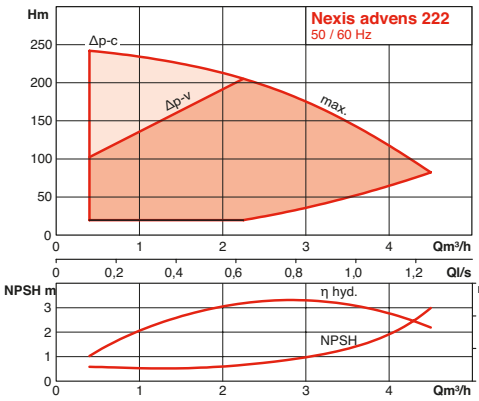

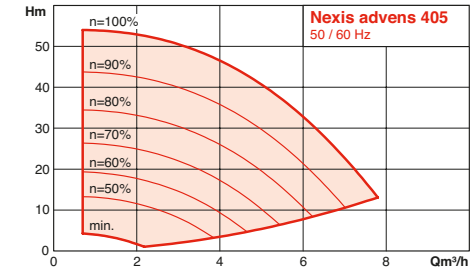

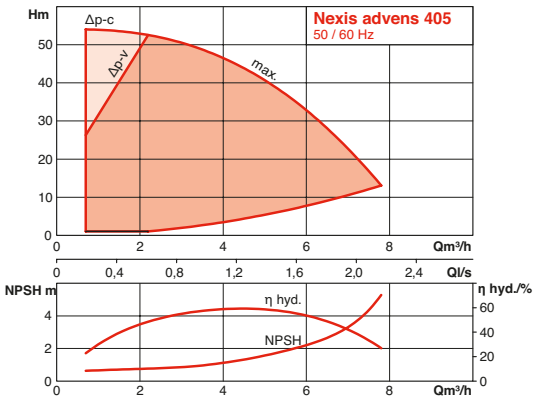

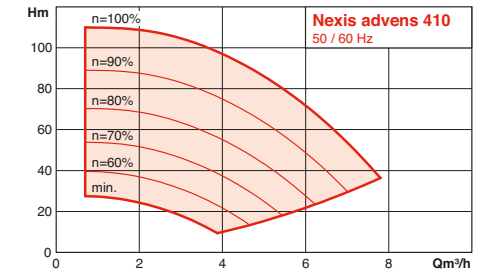

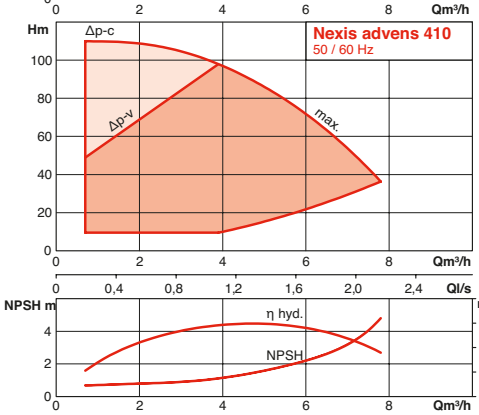

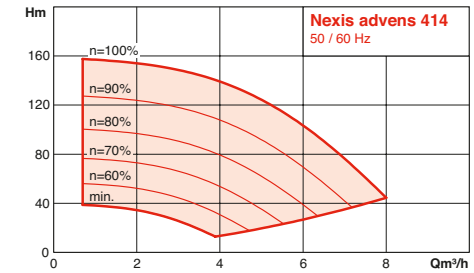

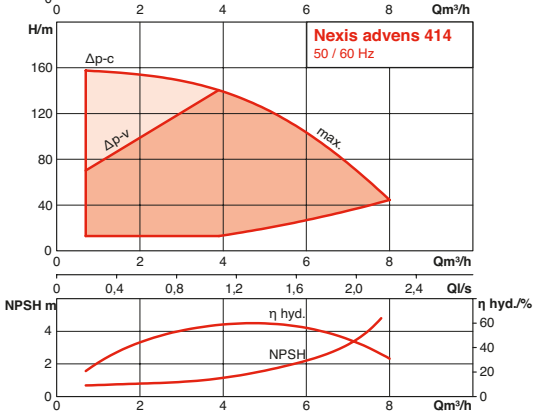

NEXIS ADVENS

HYDRAULICS PERFORMANCES - NEXIS ADVENS

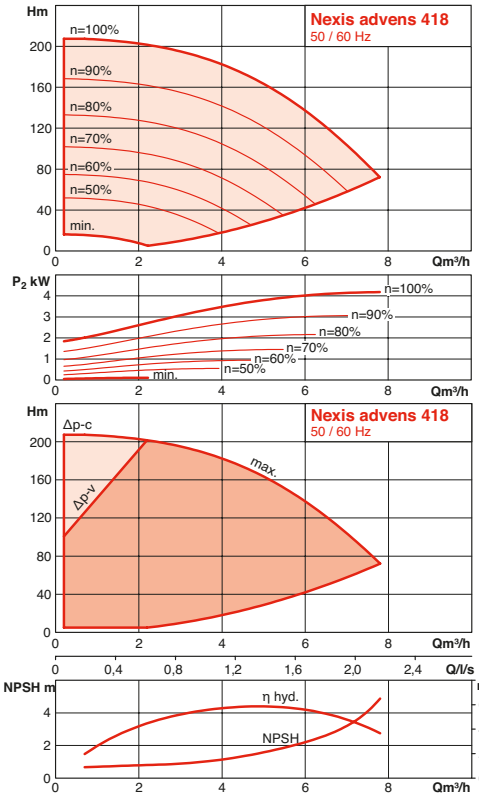

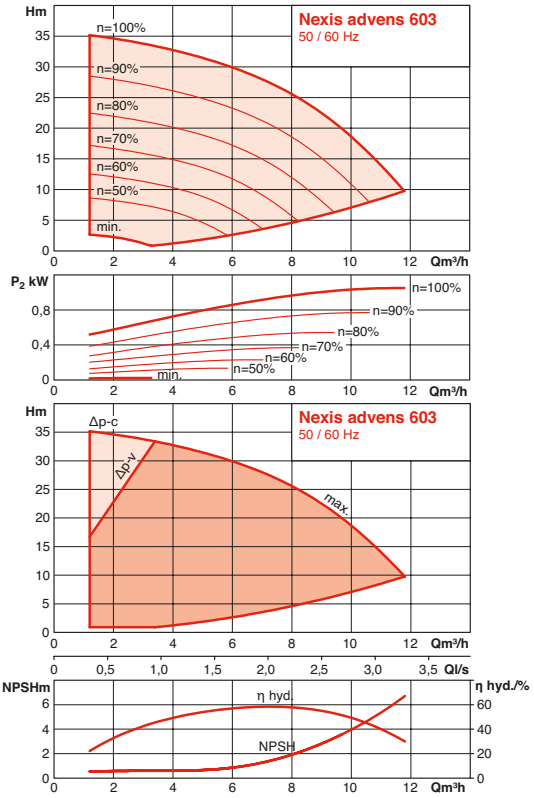

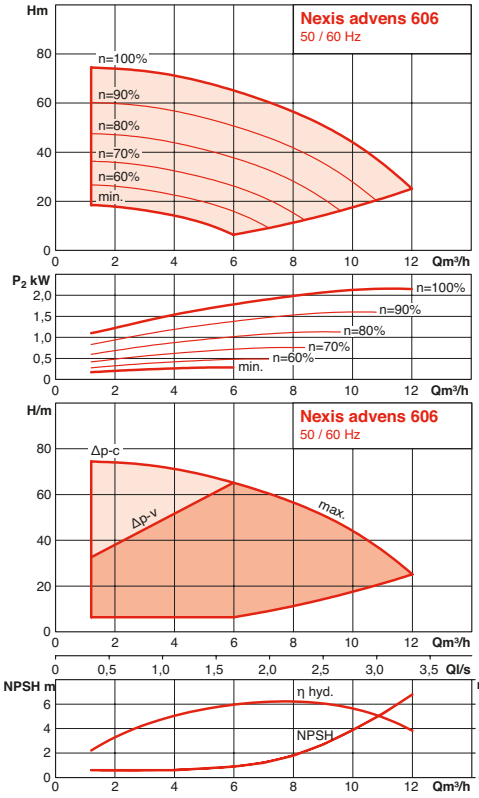

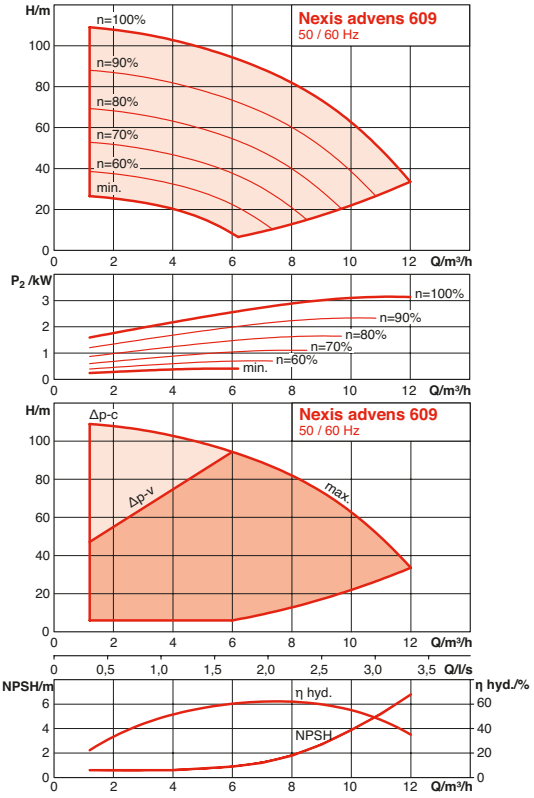

HYDRAULICS PERFORMANCES - NEXIS ADVENS

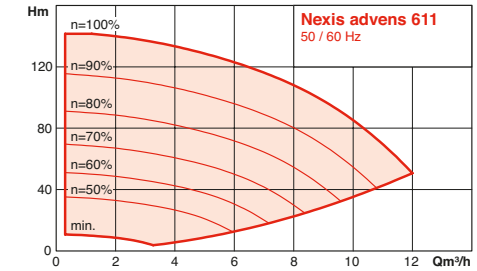

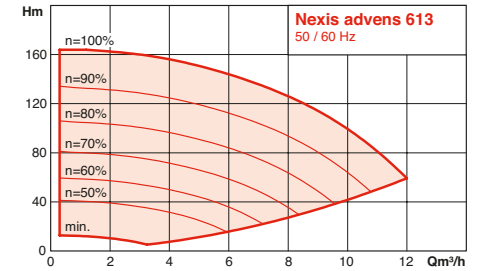

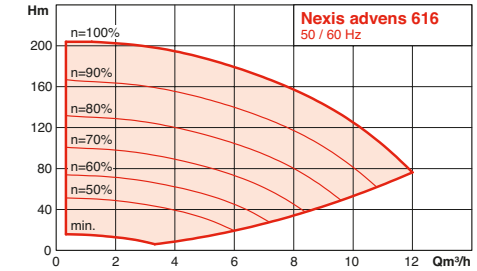

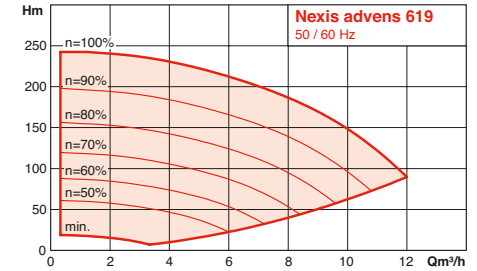

NEXIS ADVENS

HYDRAULICS PERFORMANCES - NEXIS ADVENS

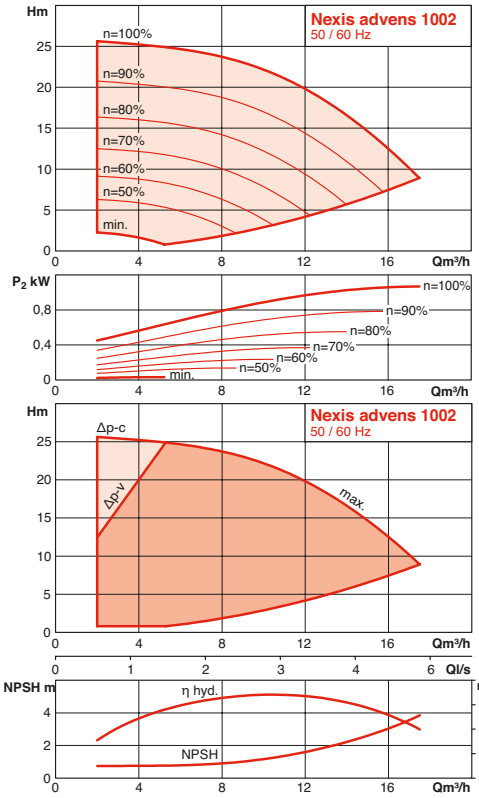

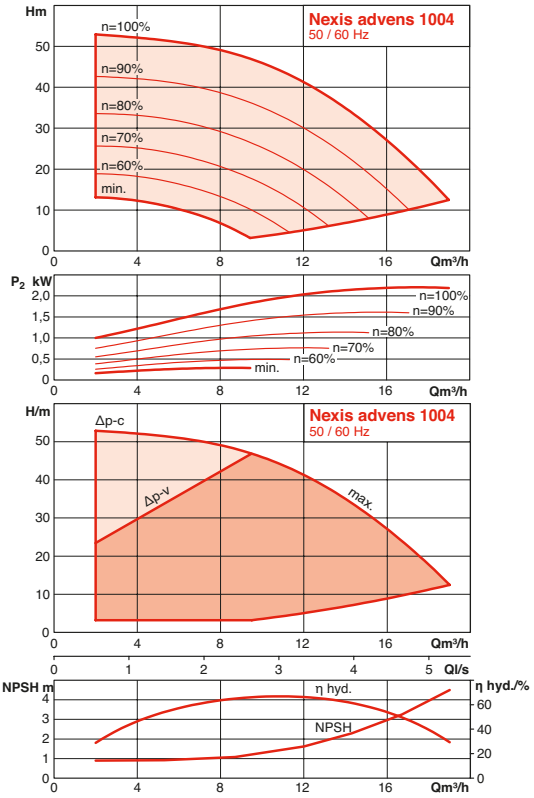

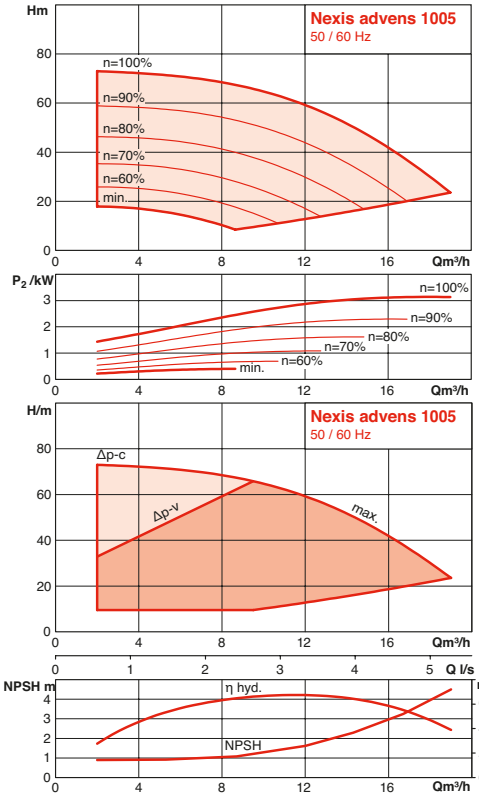

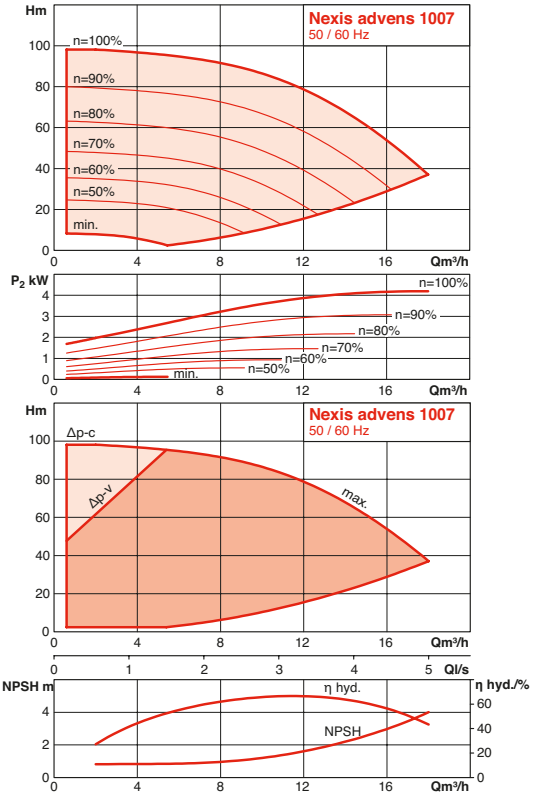

HYDRAULICS PERFORMANCES - NEXIS ADVENS

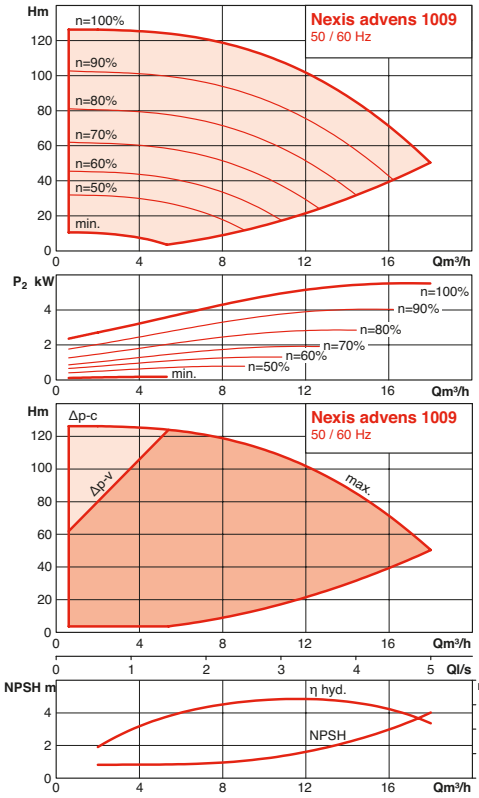

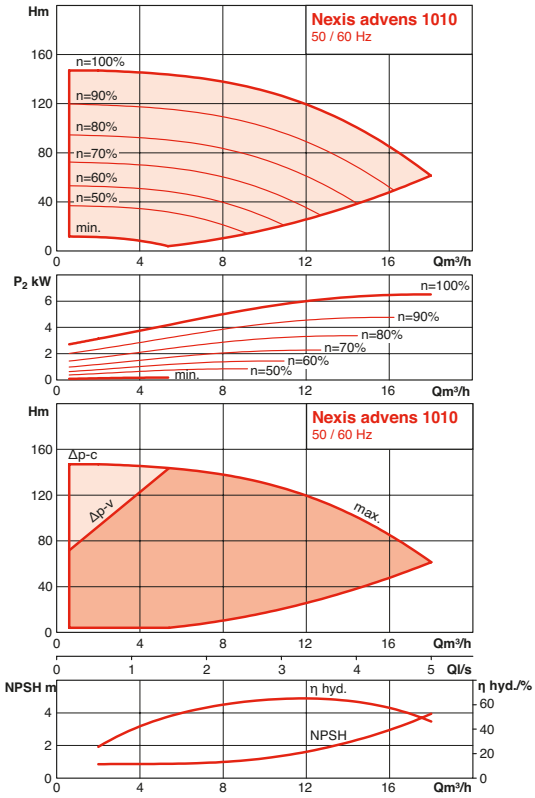

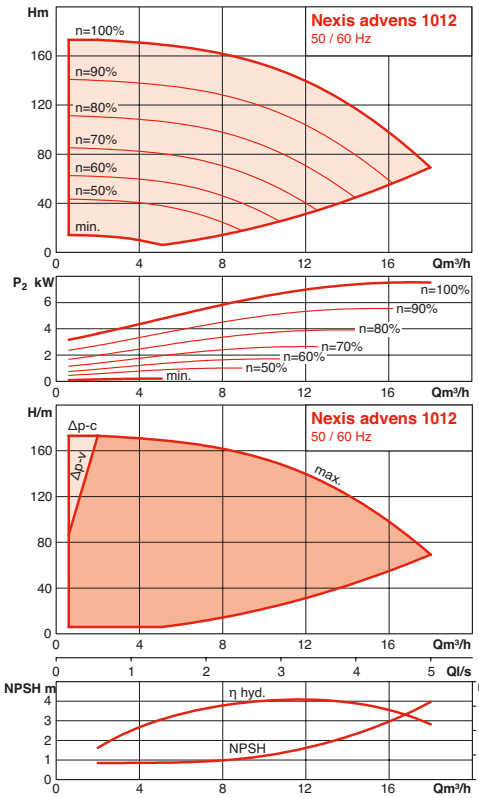

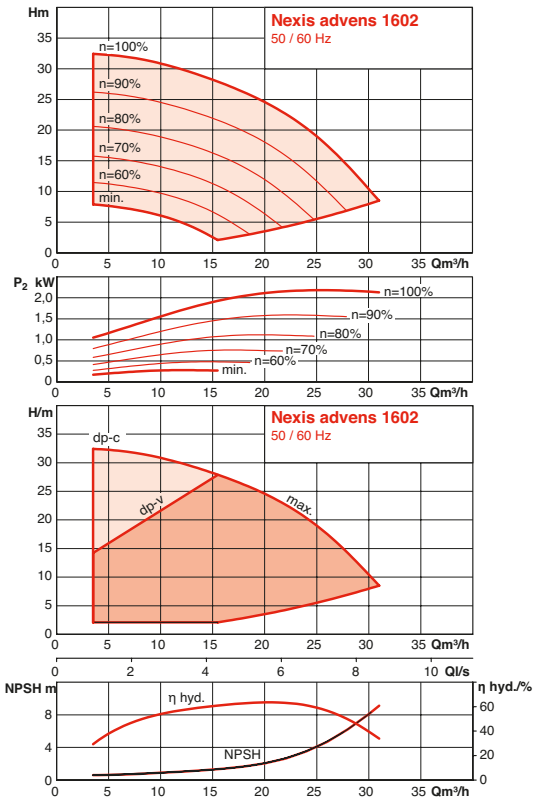

NEXIS ADVENS

HYDRAULICS PERFORMANCES - NEXIS ADVENS

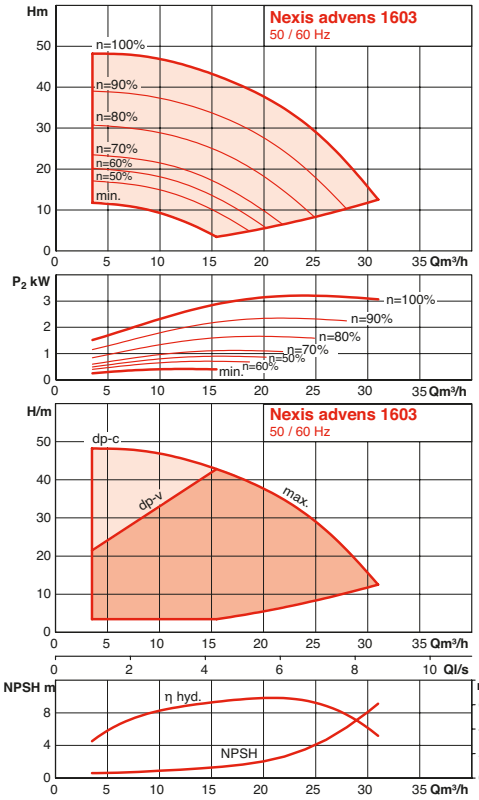

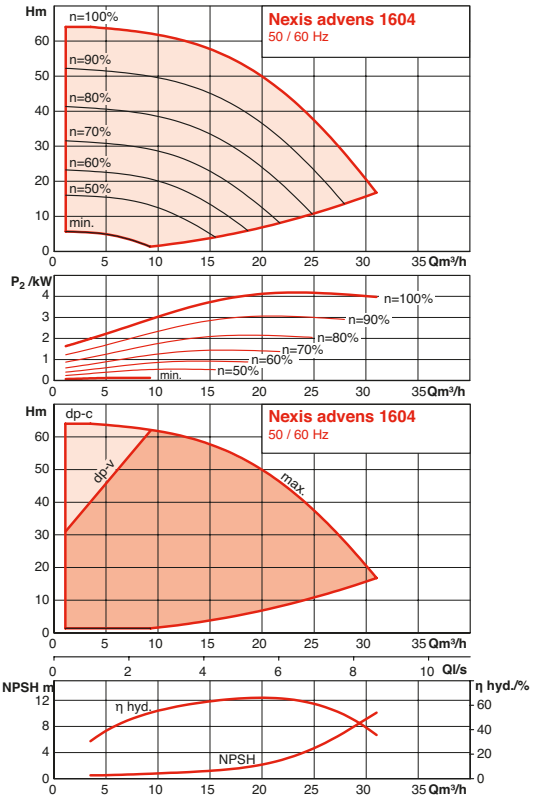

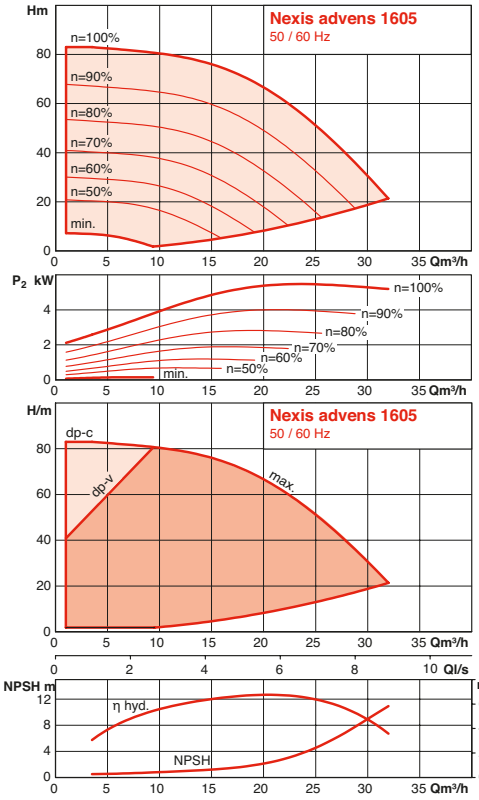

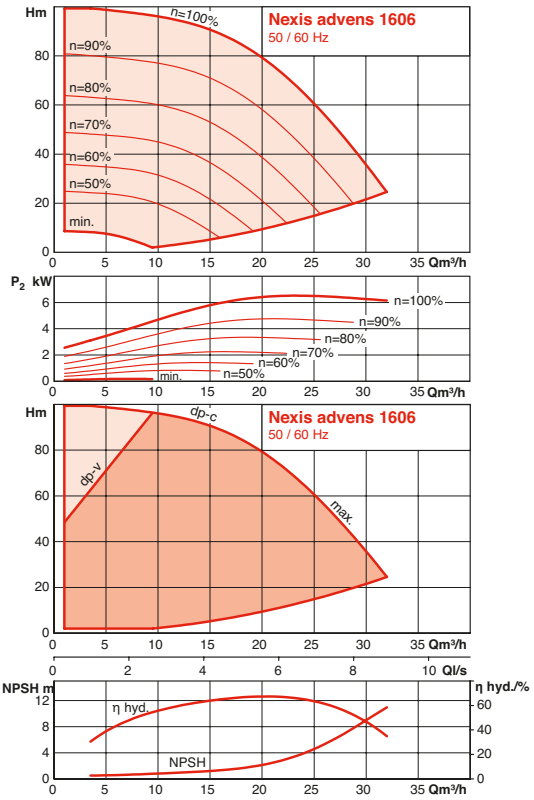

HYDRAULICS PERFORMANCES - NEXIS ADVENS

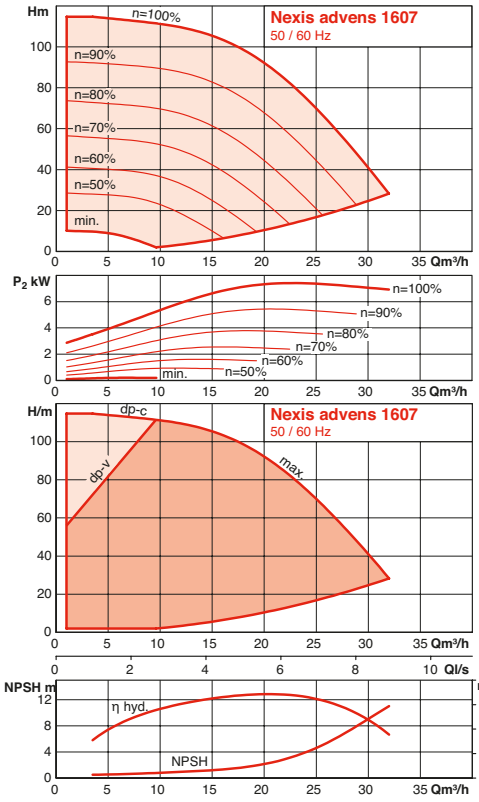

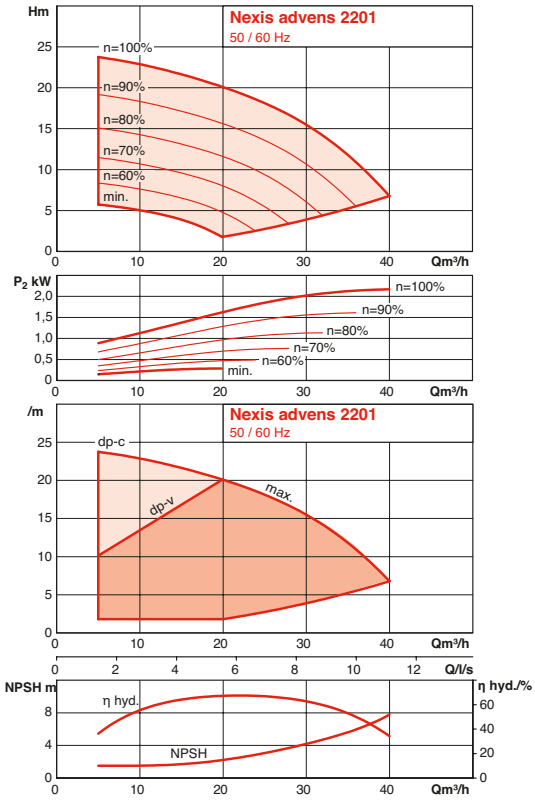

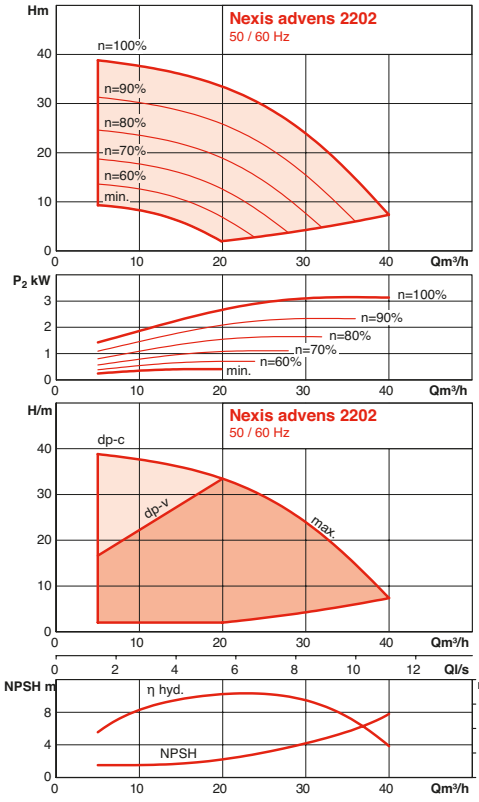

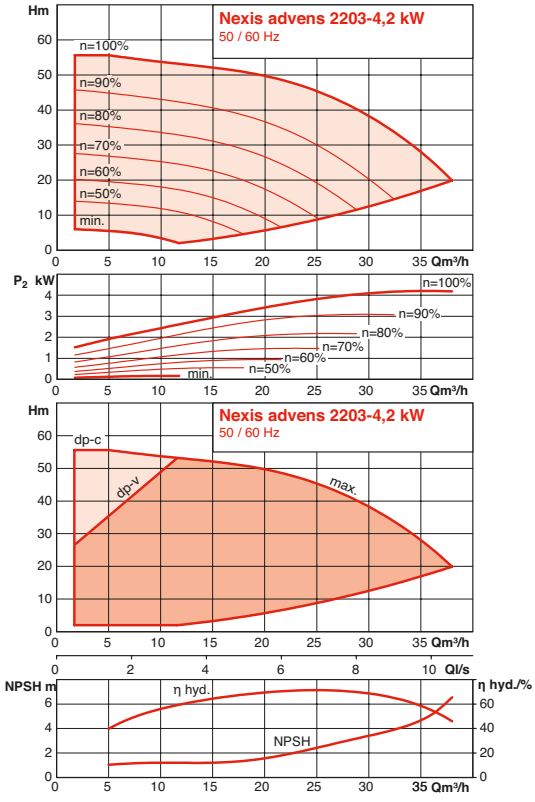

NEXIS ADVENS

HYDRAULICS PERFORMANCES - NEXIS ADVENS

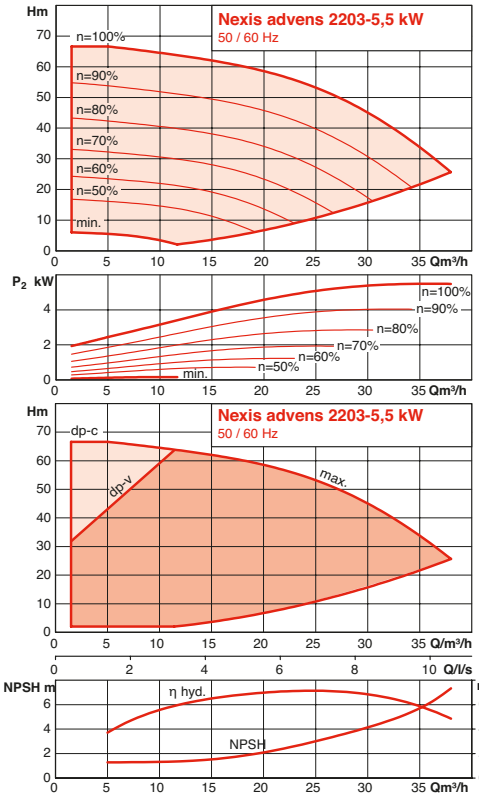

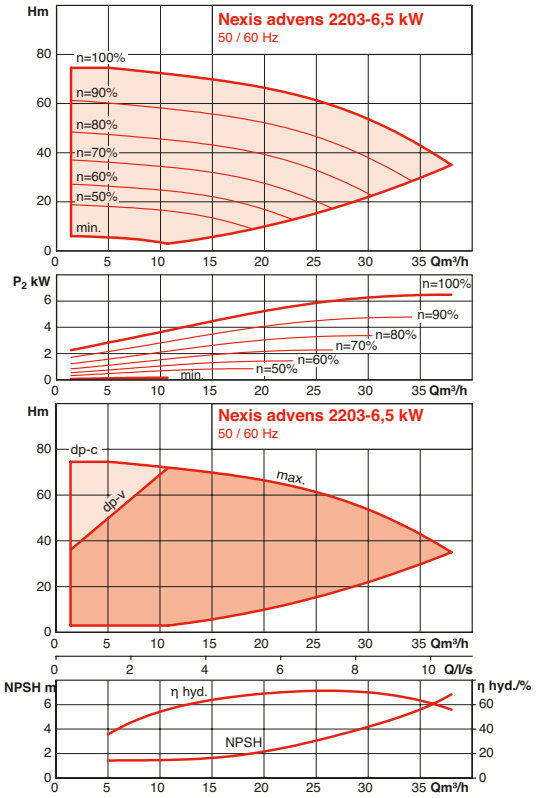

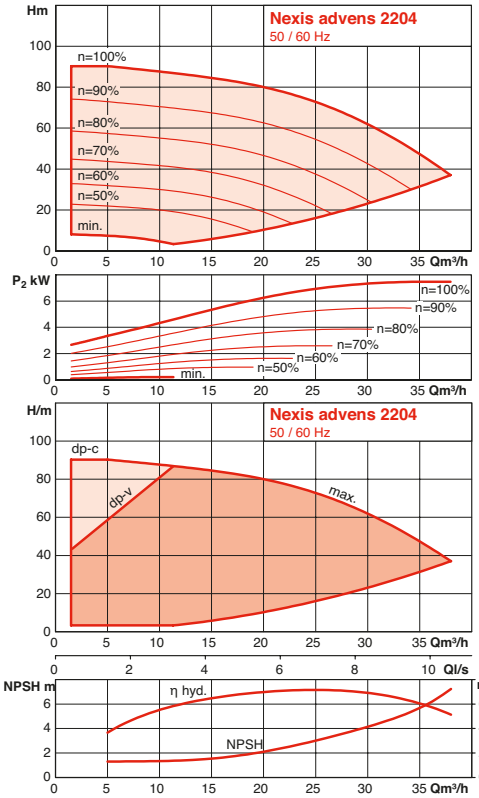

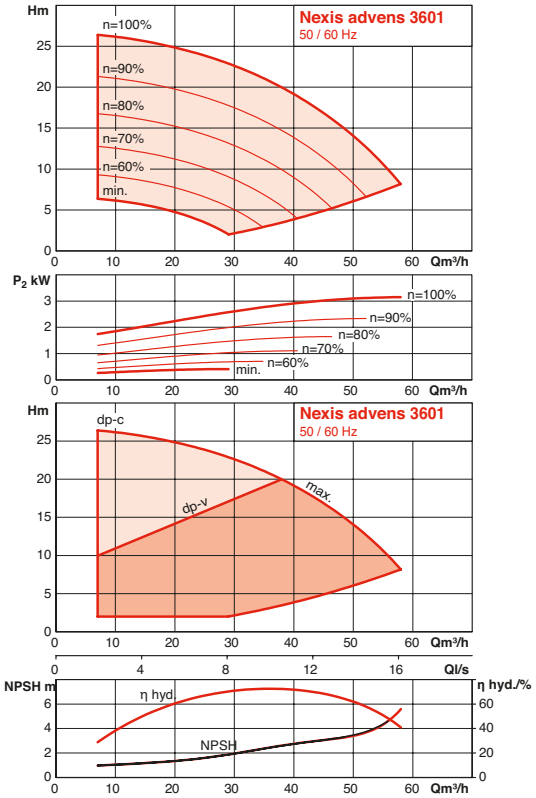

HYDRAULICS PERFORMANCES - NEXIS ADVENS

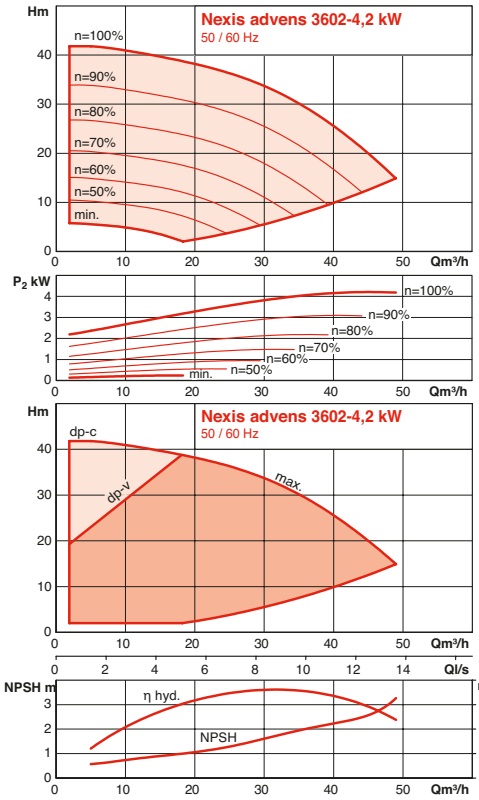

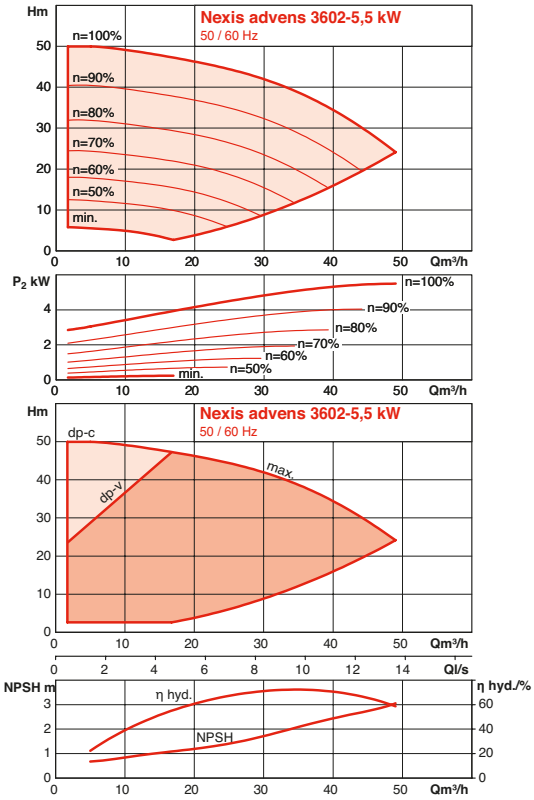

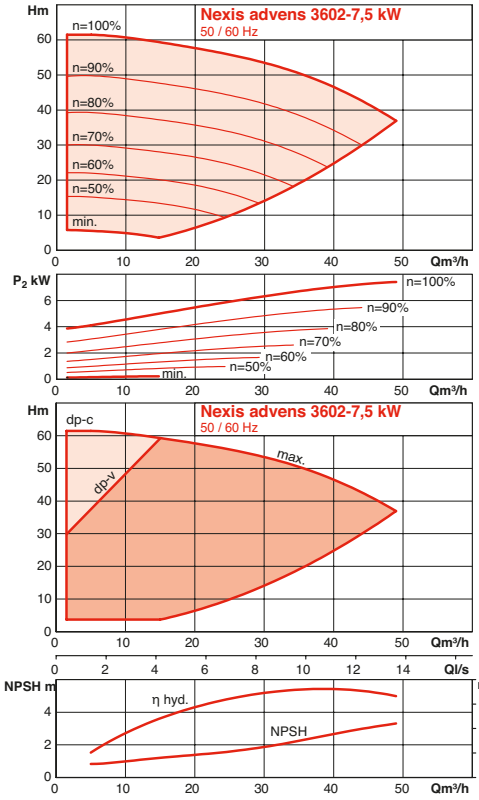

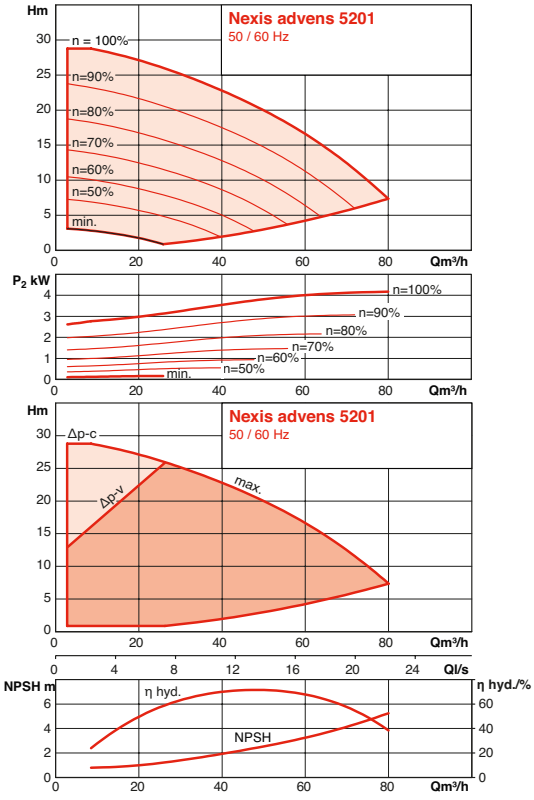

NEXIS ADVENS

HYDRAULICS PERFORMANCES - NEXIS ADVENS

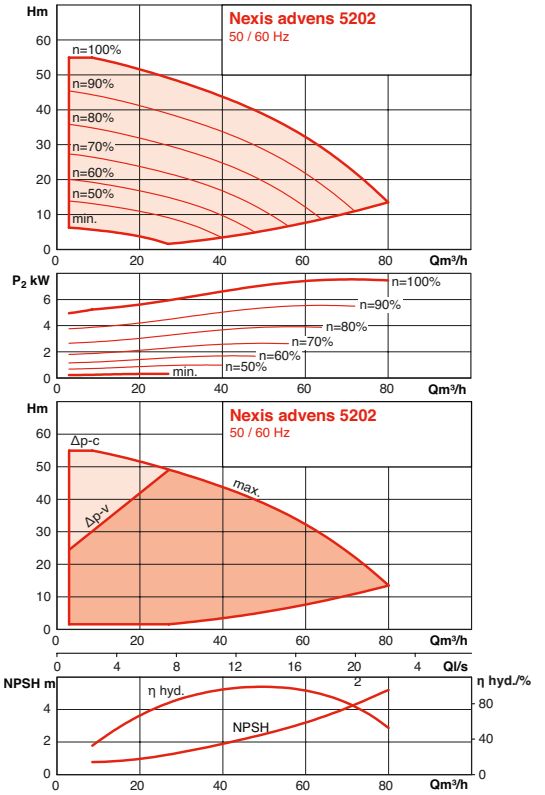

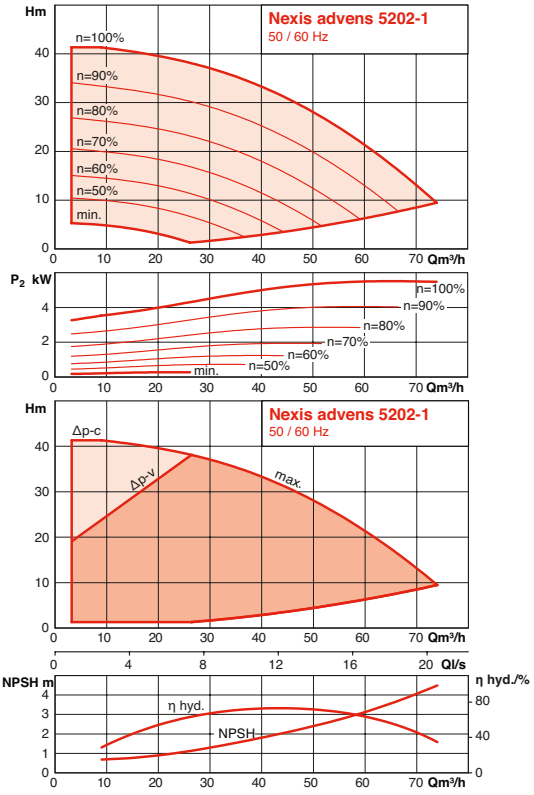

ELECTRICAL AND DIMENSIONAL SPECIFICATIONS - NEXIS ADVENS 2 AND 4

MODEL	MOTOR			DIMENSIONS					MASS	
	P2	η motor %	I Maxi 400V 50Hz 3 ~	PN	H	H2	M	X	Net weight (without packaging)	Gross weight (with packaging)
	kW	4/4	(A)		mm	mm	mm	mm	Kg	Kg
NEXIS ADVENS 208-FXV/KS	1.1	92	1.88	25	965	637	206	248	52.4	74.4
NEXIS ADVENS 208-OSE/KS	1.1	92	1.88	16	944	616	206	248	49.4	71.4
NEXIS ADVENS 216-FXV/KS	2.2	93	4.8	25	1175	847	206	248	58.5	80.5
NEXIS ADVENS 222-FSE/KS	3.2	93	6.4	25	1385	1057	206	248	61.9	83.9
NEXIS ADVENS 405-FXV/KS	1.1	92	1.88	25	894	566	206	248	49.4	71.4
NEXIS ADVENS 405-OSE/KS	1.1	92	1.88	16	869	541	206	248	47.4	69.4
NEXIS ADVENS 410-FXV/KS	2.2	93	4.8	25	1029	701	206	248	55.5	77.5
NEXIS ADVENS 410-OSE/KS	2.2	93	4.8	16	1004	676	206	248	52.5	74.5
NEXIS ADVENS 414-FXV/KS	3.2	93	6.4	25	1129	801	206	248	56.9	78.9
NEXIS ADVENS 414-OSE/KS	3.2	93	6.4	16	1104	776	206	248	54.9	76.9
NEXIS ADVENS 418-FSE/KS	4.2	95.8	7.2	25	1441	1031	224	256	71	86.5
NEXIS ADVENS 418-FXV/KS	4.2	95.8	7.2	25	1441	1031	224	256	71	86.5

PN16 G1

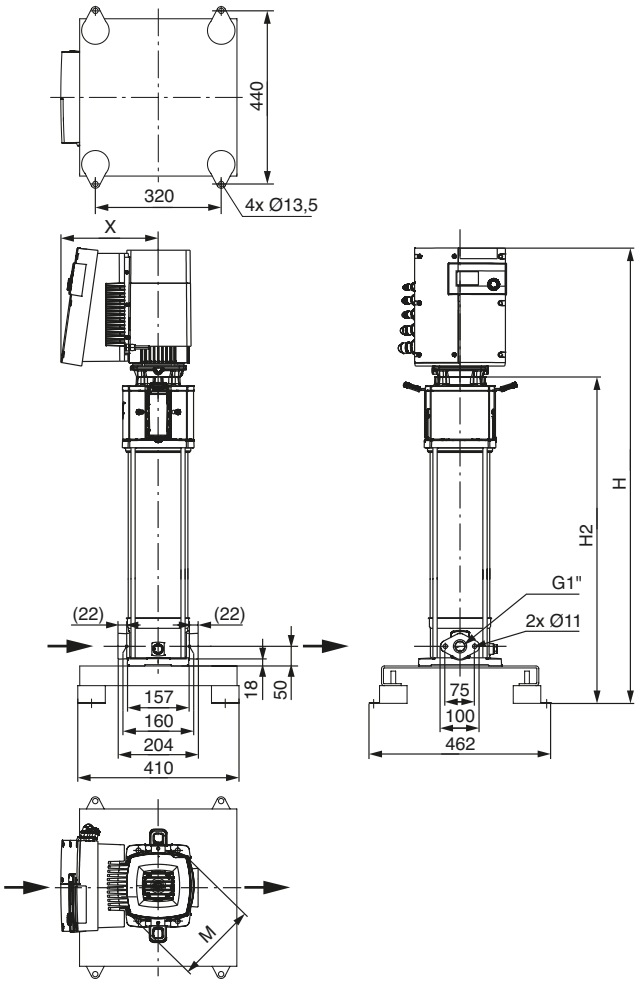

PN25 DN25

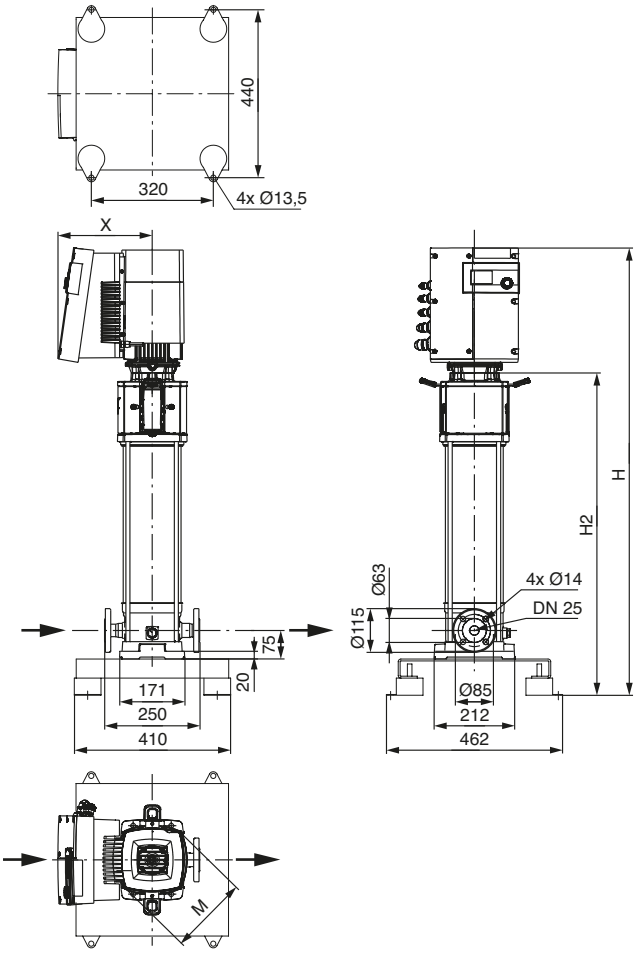

NEXIS ADVENS

ELECTRICAL AND DIMENSIONAL SPECIFICATIONS - NEXIS ADVENS 6

MODEL	MOTOR			DIMENSIONS					MASS	
	P2	η motor %	I Maxi 400V 50Hz 3 ~	PN	H	H2	M	X	Net weight (without packaging)	Gross weight (with packaging)
	kW	4/4	(A)		mm	mm	mm	mm	Kg	Kg
NEXIS ADVENS 603-FXV/KS	1.1	92	1.88	25	882	554	206	248	49.4	71.4
NEXIS ADVENS 603-OSE/KS	1.1	92	1.88	16	857	529	206	248	47.4	69.4
NEXIS ADVENS 606-FXV/KS	2.2	93	4.8	25	1004	676	206	248	53.5	75.5
NEXIS ADVENS 606-OSE/KS	2.2	93	4.8	16	969	641	206	248	52.5	74.5
NEXIS ADVENS 609-FXV/KS	3.2	93	6.4	25	1117	789	206	248	56.9	78.9
NEXIS ADVENS 609-OSE/KS	3.2	93	6.4	16	1092	764	206	248	54.9	76.9
NEXIS ADVENS 611-FSE/KS	4.2	95.8	7.2	25	1441	1031	224	256	72	87.5
NEXIS ADVENS 611-FXV/KS	4.2	95.8	7.2	25	1441	1031	224	256	72	87.5
NEXIS ADVENS 611-OSE/KS	4.2	95.8	7.2	16	1406	996	224	256	70	85.5
NEXIS ADVENS 613-FSE/KS	5.5	95.8	9.3	25	1516	1106	224	268	80	130
NEXIS ADVENS 613-FXV/KS	5.5	95.8	9.3	25	1516	1106	224	268	80	130
NEXIS ADVENS 616-FSE/K	6.5	96.5	10.9	25	1614	1181	250	280	94.5	144.5
NEXIS ADVENS 616-FXV/K	6.5	96.5	10.9	25	1614	1181	250	280	94.5	144.5
NEXIS ADVENS 619-FSE/K	7.5	96.4	12.5	25	1764	1331	250	280	97.5	147.5
NEXIS ADVENS 619-FXV/K	7.5	96.4	12.5	25	1764	1331	250	280	97.5	147.5

PN16 G1$^{1/4}$

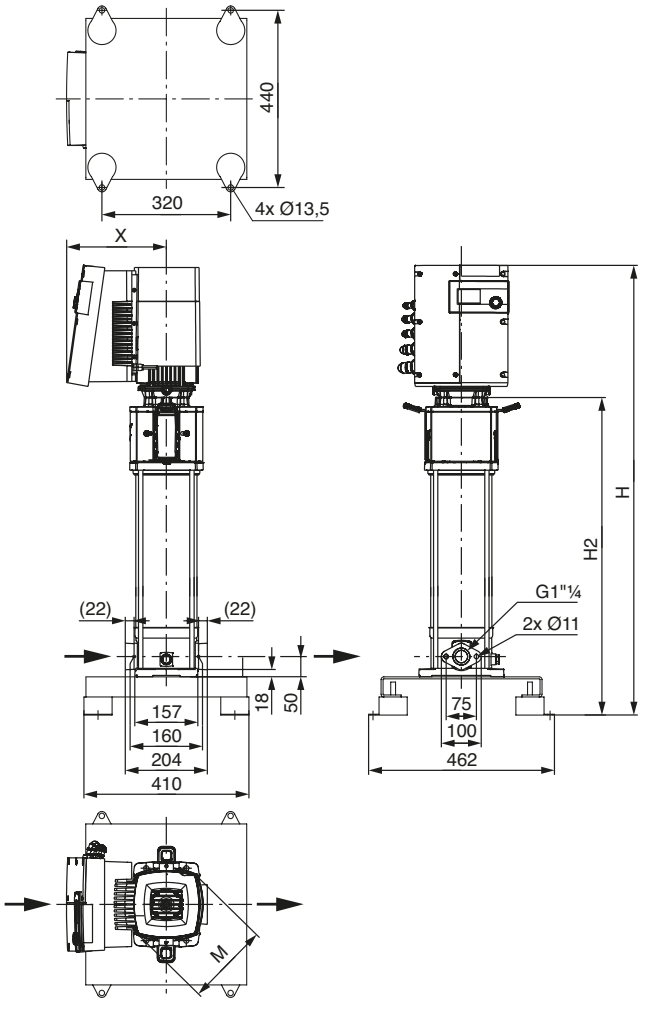

PN25 DN32

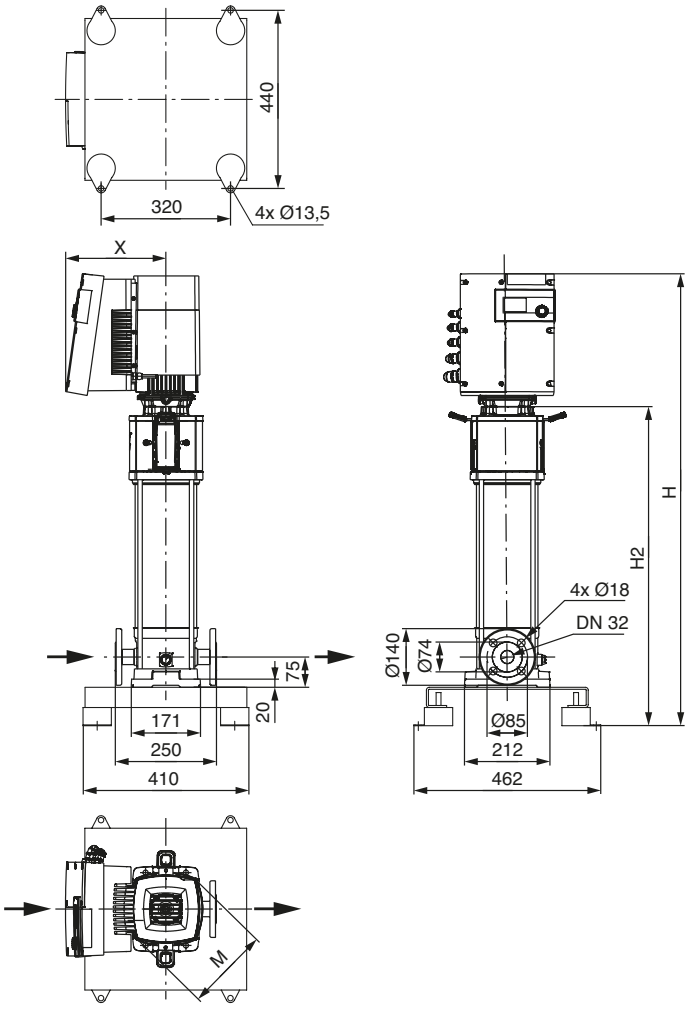

ELECTRICAL AND DIMENSIONAL SPECIFICATIONS - NEXIS ADVENS 10

MODEL	MOTOR			DIMENSIONS					MASS	
	P2	η motor %	I Maxi 400V 50Hz 3 ~	PN	H	H2	M	X	Net weight (without packaging)	Gross weight (with packaging)
	kW	4/4	(A)		mm	mm	mm	mm	Kg	Kg
NEXIS ADVENS 1002-FXV/KS	1.1	92	1.88	25	840	512	206	248	50.4	72.4
NEXIS ADVENS 1002-OSE/KS	1.1	92	1.88	16	840	512	206	248	49.8	71.8
NEXIS ADVENS 1004-FXV/KS	2.2	93	4.8	25	925	597	206	248	53.9	75.9
NEXIS ADVENS 1004-OSE/KS	2.2	93	4.8	16	925	597	206	248	53.9	75.9
NEXIS ADVENS 1005-FXV/KS	3.2	93	6.4	25	963	635	206	248	55.2	77.2
NEXIS ADVENS 1005-OSE/KS	3.2	93	6.4	16	963	635	206	248	55.2	77.2
NEXIS ADVENS 1007-FSE/KS	4.2	95.8	7.2	25	1250	840	224	256	70	85.3
NEXIS ADVENS 1007-FXV/KS	4.2	95.8	7.2	25	1250	840	224	256	70	85.3
NEXIS ADVENS 1007-OSE/KS	4.2	95.8	7.2	16	1250	840	224	256	70	85.3
NEXIS ADVENS 1009-FSE/KS	5.5	95.8	9.3	25	1325	915	224	268	86	100.9
NEXIS ADVENS 1009-FXV/KS	5.5	95.8	9.3	25	1325	915	224	268	86	100.9
NEXIS ADVENS 1009-OSE/KS	5.5	95.8	9.3	16	1325	915	224	268	78	93
NEXIS ADVENS 1010-FSE/K	6.5	96.5	10.9	25	1385	952	250	280	91.9	113.9
NEXIS ADVENS 1010-FXV/K	6.5	96.5	10.9	25	1385	952	250	280	91.9	113.9
NEXIS ADVENS 1010-OSE/K	6.5	96.5	10.9	16	1385	952	250	280	91.4	113.4
NEXIS ADVENS 1012-FSE/K	7.5	96.4	12.5	25	1460	1027	250	280	93.7	115.7
NEXIS ADVENS 1012-FXV/K	7.5	96.4	12.5	25	1460	1027	250	280	93.7	115.7

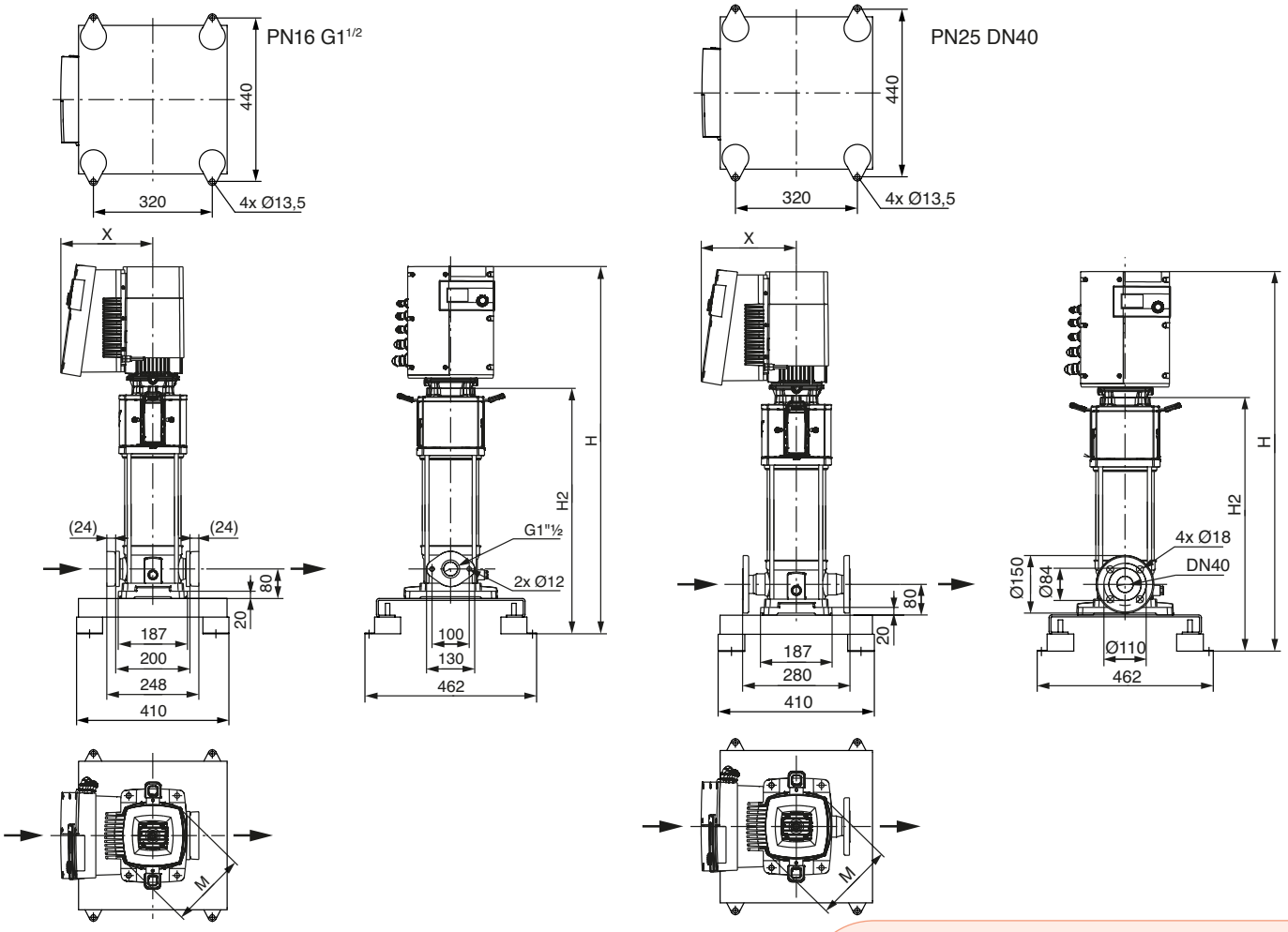

NEXIS ADVENS

ELECTRICAL AND DIMENSIONAL SPECIFICATIONS - NEXIS ADVENS 16

MODEL	MOTOR			DIMENSIONS					MASS	
	P2	η motor %	I Maxi 400V 50Hz 3 ~	PN	H	H2	M	X	Net weight (without packaging)	Gross weight (with packaging)
	kW	4/4	(A)		mm	mm	mm	mm	Kg	Kg
NEXIS ADVENS 1602-FXV/KS	2.2	93	4.8	25	885	557	206	248	55.5	77.5
NEXIS ADVENS 1602-OSE/KS	2.2	93	4.8	16	885	557	206	248	55.5	77.5
NEXIS ADVENS 1603-FXV/KS	3.2	93	6.4	25	935	607	206	248	56.9	78.9
NEXIS ADVENS 1603-OSE/KS	3.2	93	6.4	16	935	607	206	248	56.9	78.9
NEXIS ADVENS 1604-FSE/KS	4.2	95.8	7.2	25	1197	787	224	256	70	85.5
NEXIS ADVENS 1604-FXV/KS	4.2	95.8	7.2	25	1197	787	224	256	70	85.5
NEXIS ADVENS 1604-OSE/KS	4.2	95.8	7.2	16	1197	787	224	256	70	85.5
NEXIS ADVENS 1605-FSE/KS	5.5	95.8	9.3	25	1247	837	224	268	84	99.5
NEXIS ADVENS 1605-FXV/KS	5.5	95.8	9.3	25	1247	837	224	268	84	99.5
NEXIS ADVENS 1605-OSE/KS	5.5	95.8	9.3	16	1247	837	224	268	77	92.1
NEXIS ADVENS 1606-FSE/K	6.5	96.5	10.9	25	1320	887	250	280	91.5	113.5
NEXIS ADVENS 1606-FXV/K	6.5	96.5	10.9	25	1320	887	250	280	91.5	113.5
NEXIS ADVENS 1606-OSE/K	6.5	96.5	10.9	16	1320	887	250	280	91.5	113.5
NEXIS ADVENS 1607-FSE/K	7.5	96.4	12.5	25	1370	937	250	280	92.5	114.5
NEXIS ADVENS 1607-FXV/K	7.5	96.4	12.5	25	1370	937	250	280	92.5	114.5
NEXIS ADVENS 1607-OSE/K	7.5	96.4	12.5	16	1370	937	250	280	92.5	114.5

PN16 G2

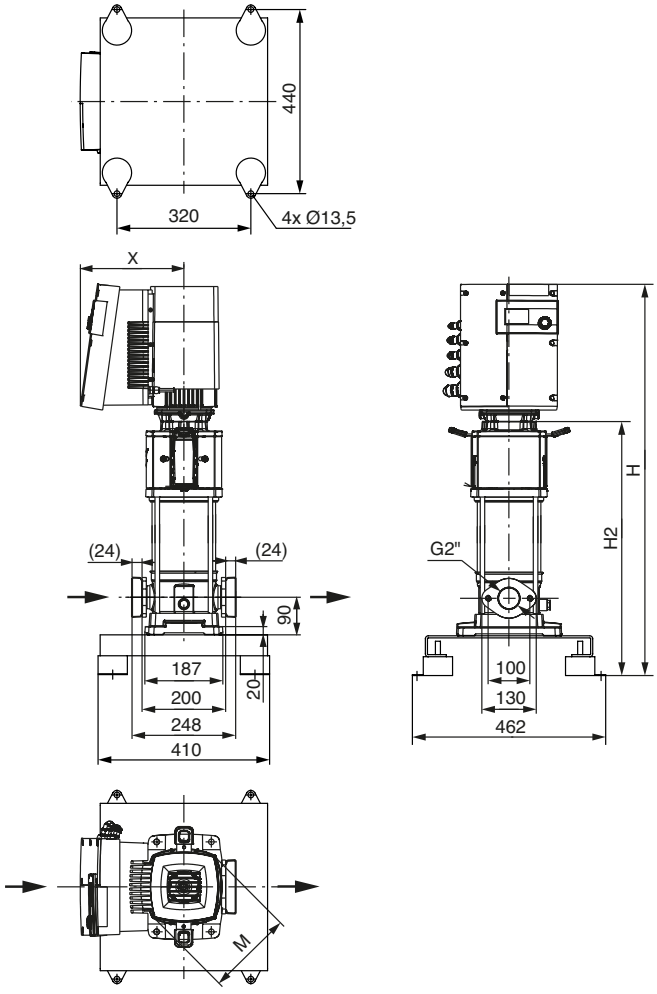

PN25 DN50

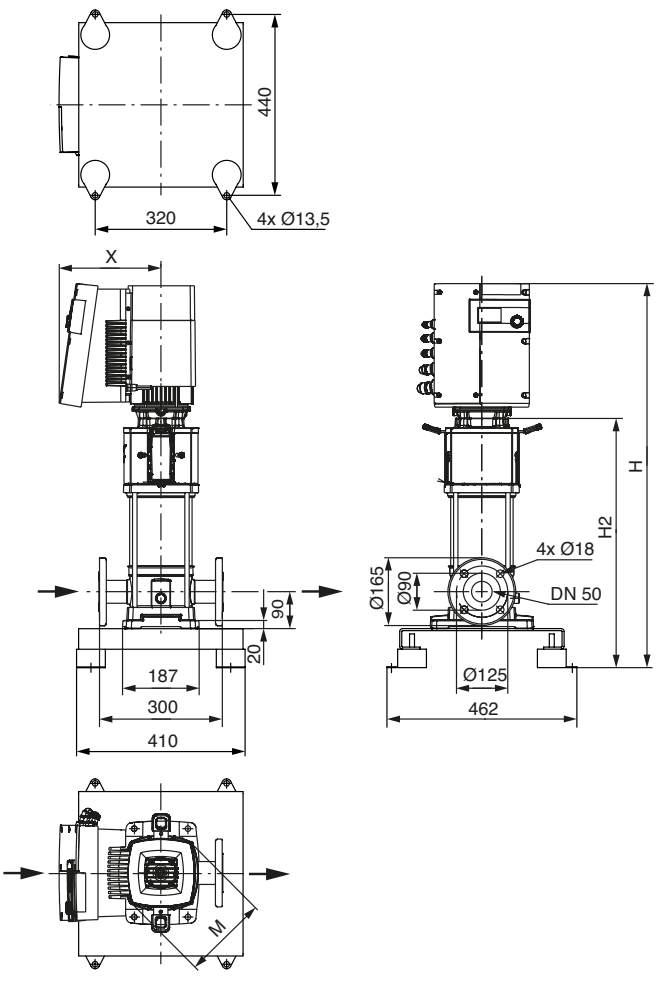

ELECTRICAL AND DIMENSIONAL SPECIFICATIONS - NEXIS ADVENS 22

· PN16 DN50

MODEL	MOTOR			DIMENSIONS					MASS	
	P2	η motor %	I Maxi 400V 50Hz 3 ~	PN	H	H2	M	X	Net weight (without packaging)	Gross weight (with packaging)
	kW	4/4	(A)		mm	mm	mm	mm	Kg	Kg
NEXIS ADVENS 2201-OGE/KS	2.2	93	4.8	16	913	586	206	248	67.5	89.5
NEXIS ADVENS 2202-OGE/KS	3.2	93	6.4	16	913	585	206	248	77.1	99.1
NEXIS ADVENS 2203-4.2-OGE/KS	4.2	95.8	7.2	16	1176	766	224	256	83	95.5
NEXIS ADVENS 2203-4.2-OXV/KS	4.2	95.8	7.2	16	1176	766	224	256	83	95.5
NEXIS ADVENS 2203-5.5-FGE/KS	5.5	95.8	9.3	25	1176	766	224	268	96	108.5
NEXIS ADVENS 2203-5.5-FXV/KS	5.5	95.8	9.3	25	1176	766	224	268	96	108.5
NEXIS ADVENS 2203-5.5-OGE/KS	5.5	95.8	9.3	16	1176	766	224	268	89	101.1
NEXIS ADVENS 2203-5.5-OXV/KS	5.5	95.8	9.3	16	1176	766	224	268	89	101.1
NEXIS ADVENS 2203-6.5-FGE/K	6.5	96.5	10.9	25	1195	762	250	280	99.5	121.5
NEXIS ADVENS 2203-6.5-FXV/K	6.5	96.5	10.9	25	1195	762	250	280	99.5	121.5
NEXIS ADVENS 2203-6.5-OGE/K	6.5	96.5	10.9	16	1195	762	250	280	99.5	121.5
NEXIS ADVENS 2203-6.5-OXV/K	6.5	96.5	10.9	16	1195	762	250	280	99.5	121.5
NEXIS ADVENS 2204-FGE/K	7.5	96.4	12.5	25	1245	812	250	280	103.5	125.5
NEXIS ADVENS 2204-FXV/K	7.5	96.4	12.5	25	1245	812	250	280	103.5	125.5
NEXIS ADVENS 2204-OGE/K	7.5	96.4	12.5	16	1245	812	250	280	103.5	125.5
NEXIS ADVENS 2204-OXV/K	7.5	96.4	12.5	16	1245	812	250	280	103.5	125.5

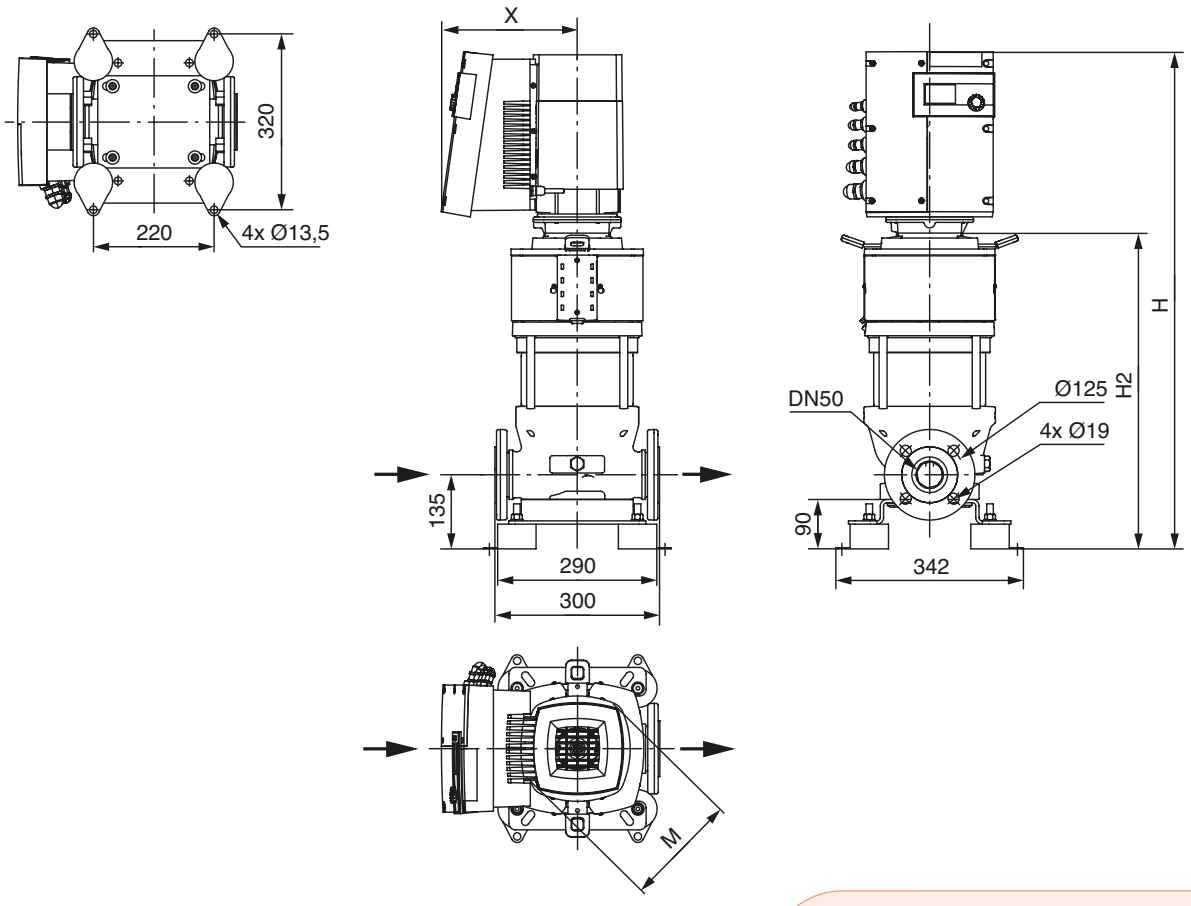

NEXIS ADVENS

ELECTRICAL AND DIMENSIONAL SPECIFICATIONS - NEXIS ADVENS 36

• **PN16 DN65**

MODEL	MOTOR			DIMENSIONS					MASS	
	P2	η motor %	I Maxi 400V 50Hz 3 ~	PN	H	H2	M	X	Net weight (without packaging)	Gross weight (with packaging)
	kW	4/4	(A)		mm	mm	mm	mm	Kg	Kg
NEXIS ADVENS 3601-OGE/KS	3.2	93	6.4	16	895	567	206	248	75.9	97.9
NEXIS ADVENS 3602-4.2-OGE/KS	4.2	95.8	7.2	16	1174	764	224	256	93	115
NEXIS ADVENS 3602-4.2-OXV/KS	4.2	95.8	7.2	16	1174	764	224	256	93	115
NEXIS ADVENS 3602-5.5-OGE/KS	5.5	95.8	9.3	16	1174	764	224	268	99	121
NEXIS ADVENS 3602-5.5-OXV/KS	5.5	95.8	9.3	16	1174	764	224	268	99	121
NEXIS ADVENS 3602-7.5-FGE/K	7.5	96.4	12.5	25	1193	760	250	280	117.5	139.5
NEXIS ADVENS 3602-7.5-FXV/K	7.5	96.4	12.5	25	1193	760	250	280	117.5	139.5
NEXIS ADVENS 3602-7.5-OGE/K	7.5	96.4	12.5	16	1193	760	250	280	114.5	136.5
NEXIS ADVENS 3602-7.5-OXV/K	7.5	96.4	12.5	16	1193	760	250	280	114.5	136.5

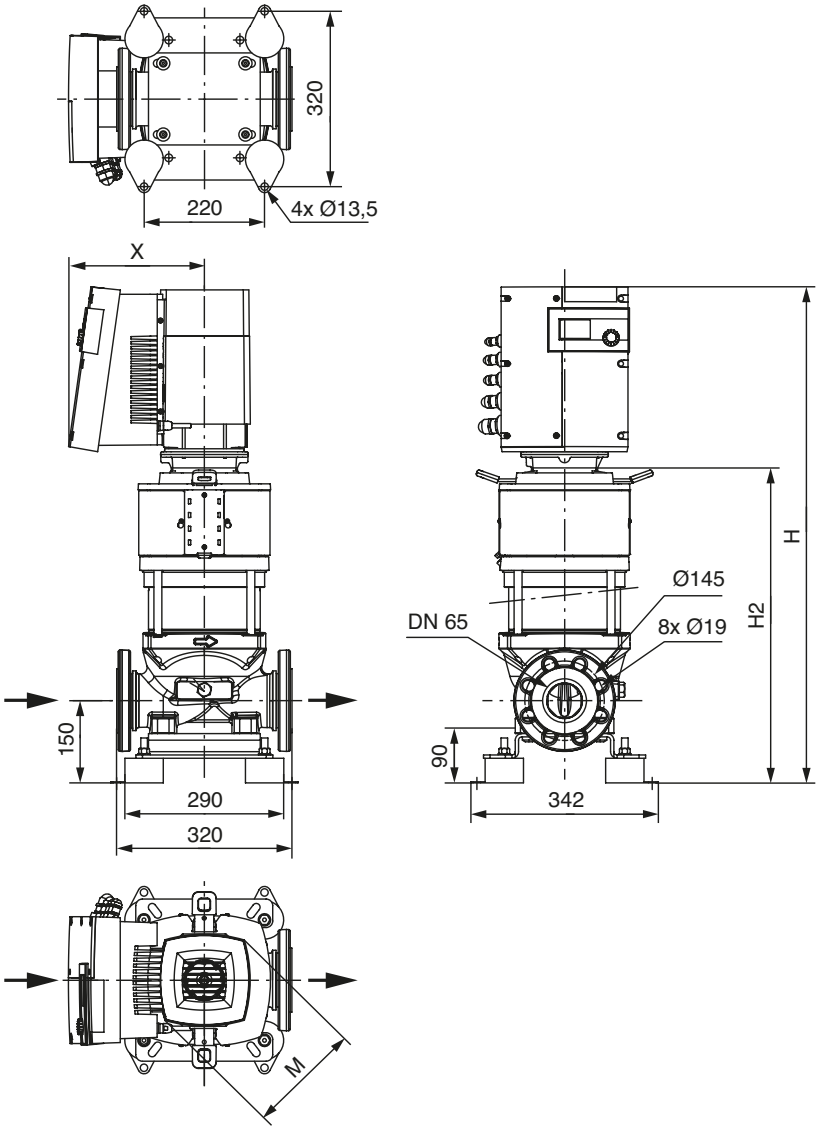

ELECTRICAL AND DIMENSIONAL SPECIFICATIONS - NEXIS ADVENS 52

- **PN16 DN65**

MODEL	MOTOR			DIMENSIONS					MASS	
	P2	η motor %	I Maxi 400V 50Hz 3 ~	PN	H	H2	M	X	Net weight (without packaging)	Gross weight (with packaging)
	kW	4/4	(A)		mm	mm	mm	mm	Kg	Kg
NEXIS ADVENS 5201-OGE/KS	4.2	95.8	7.2	16	1142	732	224	256	102	124
NEXIS ADVENS 5201-OXV/KS	4.2	95.8	7.2	16	1142	732	224	256	102	124
NEXIS ADVENS 5202/1-OGE/KS	5.5	95.8	9.3	16	1381	948	224	268	120	135.5
NEXIS ADVENS 5202/1-OXV/KS	5.5	95.8	9.3	16	1381	948	224	268	120	135.5
NEXIS ADVENS 5202-OGE/K	7.5	96.4	12.5	16	1216	783	250	280	129	151
NEXIS ADVENS 5202-OXV/K	7.5	96.4	12.5	16	1216	783	250	280	129	151

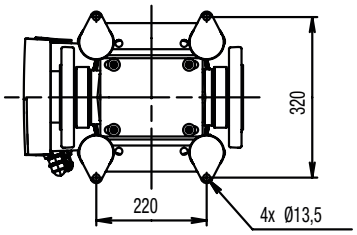

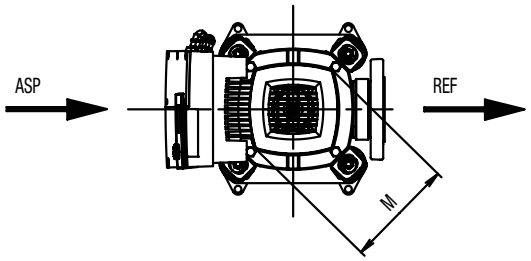

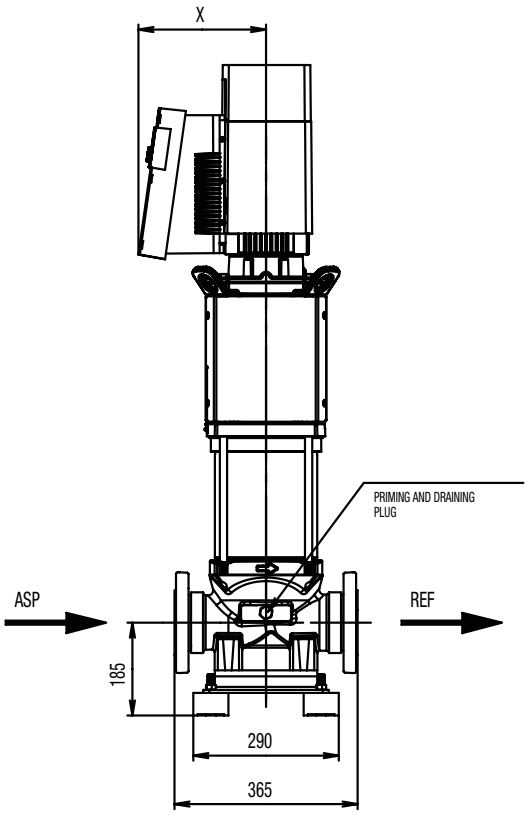

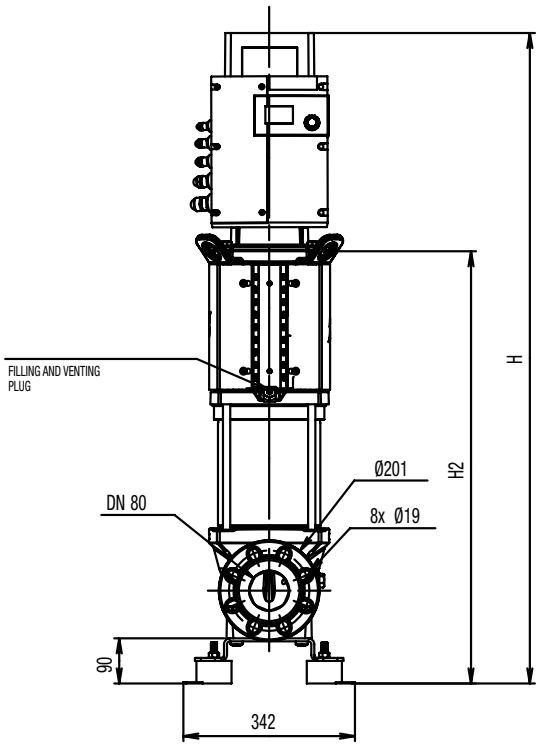

NEXIS ADVENS

RANGE OF ITEMS SUPPLIED

– Nexis Advens 2 – 16: oval backflanges with corresponding screws and O-rings (PN16 model) or pins and gaskets if backflanges are used (PN25 model with round flanges).
– Nexis advens 22 – 52: Pins and gaskets if backflanges are used (PN16 and PN25 with round flanges).
– Installation and commissioning instructions. Integral funnel for easier filling of the pump (Nexis Advens 2 – 16 only).

FEATURES

a) Electrical
– Three-phase 380 V / 440V - 50/ 60 Hz, tolerance ± 6%.

b) Fitting
– Installation in an easily accessible place. For heavy pumps, provide a hoisting hook on the pump axis to allow for easy dismantling.
– Mounting on a > 10cm tall concrete block, fixing by anchor bolts.
– Pump axis always horizontal.

Connection to the system using «Victaulic» quick connectors or backflanges.

c) Packaging
– Oval-flanged pumps: supplied with cast-iron oval back flanges for screw-on pipe, gaskets and bolts.
– Round-flanged pumps: supplied with gaskets and bolts, without backflanges (optional).

RECOMMENDED ACCESSORIES

– Electronic communication and control IF interface.
– Regulating pressure sensor kit.
– By-pass and pressure tap kit.
– Shut-off valves.
– Screw-on or weld-on back flanges (steel or stainless steel).
– Vibration-damping sleeves.
– Bladder tank (24 l max.)
– Non-return valves.
– Strainer foot valve with low head losses.
– Low-water protection by pressure switch (mains) or float switch (storage tank).

OPERATING RANGES

Flow rates of up to:	**14 m³/h**
Manometric heads of up to:	**137 m CE**
Max. operating pressure:	**10 bar**
Max. intake pressure:	**6 bar**
Temperature range:	**– 15° to + 90°C**
Max. ambient temperature:	**+ 40°C**
DN (nominal diameter) of ports:	**G1”to G1”1/2**
Reference MEI*:	**≥ 0,10**

*Minimum Efficiency Index

MUV

VERTICAL MULTI-STAGE PUMPS
2 pole - 50 Hz

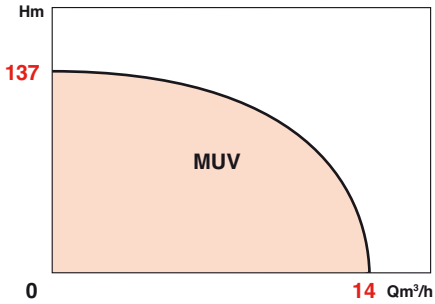

APPLICATIONS

Pumping of clean, non-muddy liquids in the housing, agricultural and industrial sectors:
- Supply - Boosting
- Watering - Irrigation
- Washing stations
- Heating - Air conditioning

And for incorporation into all modular systems.
Abstraction from wells, springs, rivers, ponds...

ADVANTAGES

- **Extended shaft design allows for optimised alignment**
- **Stainless steel impellers and stages, cast iron pump housing**
- **Impeller rings and seals between very thick cells: impervious to thermal expansion and eliminates the risk of seizing;**
- **Standardised mechanical seal +90°C**



Certified ACS

• MUV

MUV

DESIGN

• Hydraulic part

- Vertical, multi-stage, centrifugal, with 2 to 12 stages.
- Vertical axis, in-line suction/delivery orifices in the lower part
- Impellers fitted directly onto the extended motor shaft.
- Standardised mechanical seal ensures leak-tightness of shaft passage.

• Motor

- Standard ventilated
- With extended shaft end
- Rotor-shaft guide bearings lubricated for life.

Rotation speed:	2900 rpm
Three-phase winding:	230-400 V
Single-phase :	230 V
Frequency :	50 Hz (optional 60 Hz)
Insulation class:	155 (F)
Protection class:	IP 54

IDENTIFICATION

MUV 10 2 - O E - T / 2 / 6 / OEM / XX / B

- Pump family
- Nominal flowrate in m3/h (at 50 hz / 2 poles)
- Number of impellers
- O = PN16 oval flanges
- E = EPDM gasket
- M = Single-phase / T = Three-phase
- 2 = 2 pole
- Nothing = 50 Hz / 6 = 60 Hz
- Original Equipment Manufacturer
- Technical definition code
- Technical definition code

BASIC CONSTRUCTION

Main parts	Material
Pump casing	EN GJL250
Impellers	304 stainless steel
Cells (stage housing)	304 stainless steel
Pump shaft	Stainless steel
Cell centring device	304 stainless steel
Mechanical seal	Carbon/Silicon carbide
O-rings	EPDM ethylene propylene
Fixing-support bearing	EN GJL250

HYDRAULIC PRESELECTION RANGE

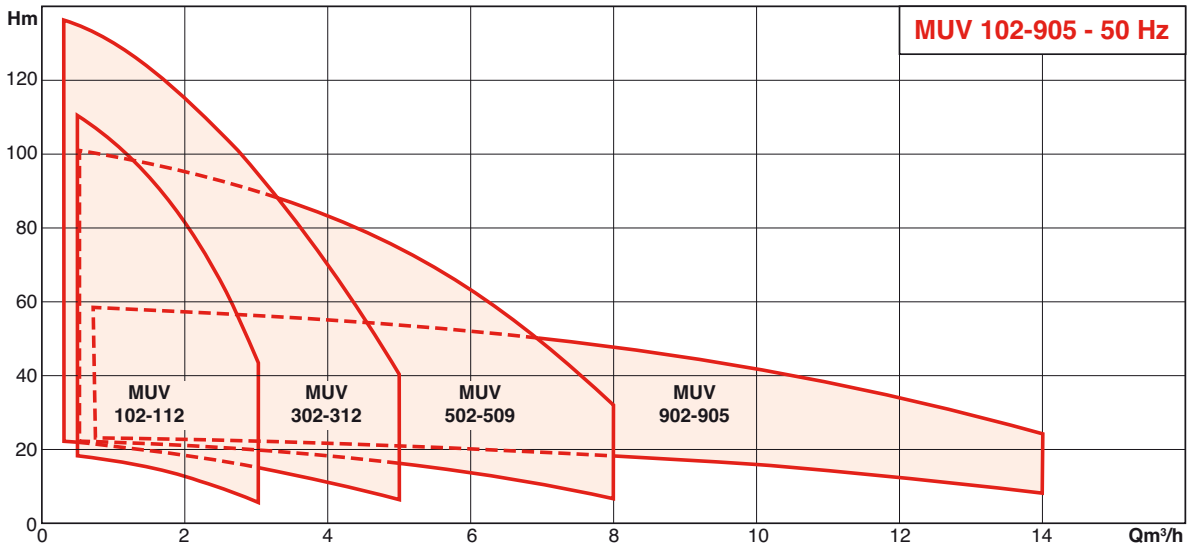

SECTIONAL DIAGRAM

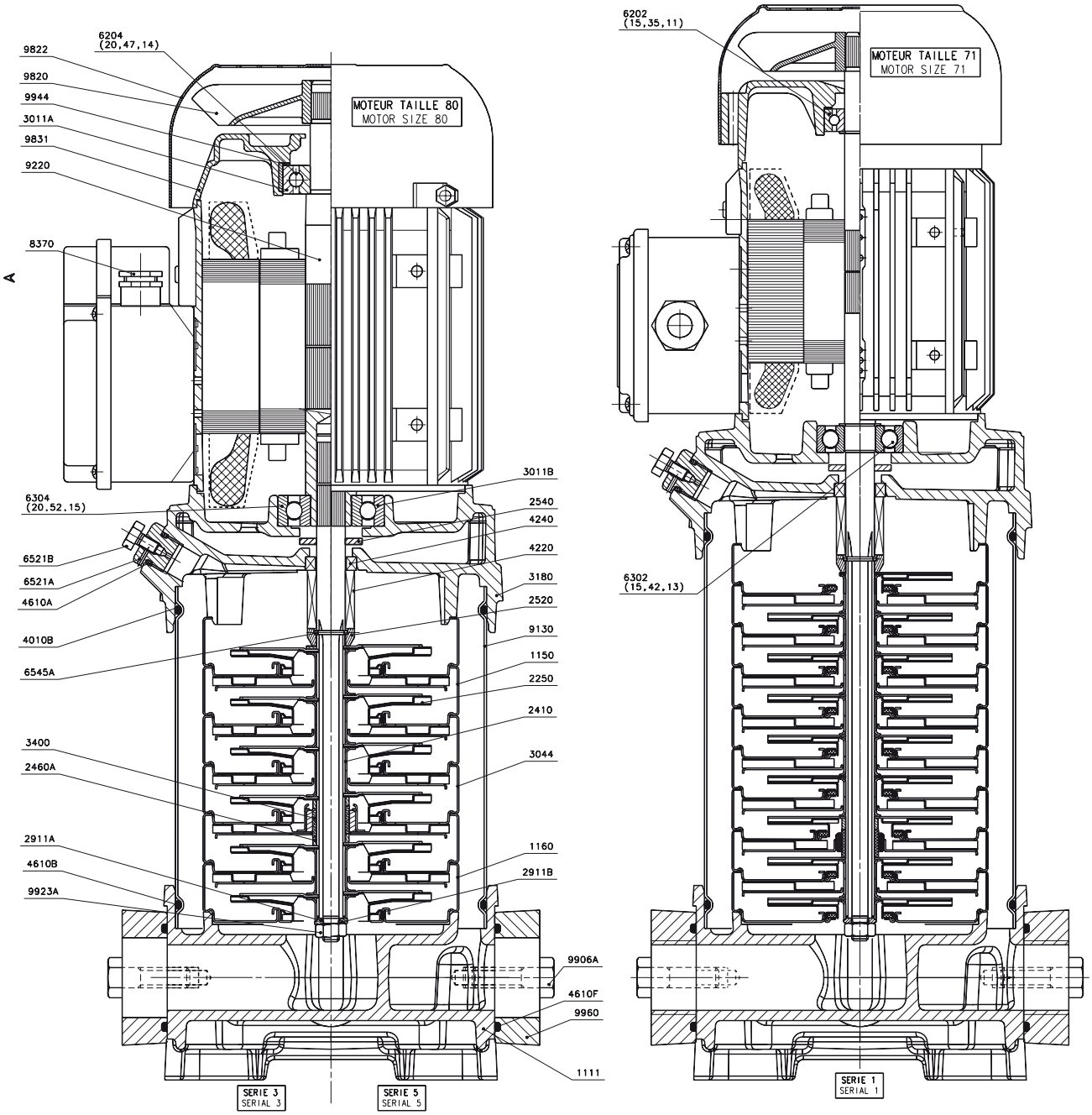

Designation	reference no
Suction housing	1130
Stage housing with interstage crossover	1150
Stage housing without interstage crossover	1160
Impeller	2250
Impeller spacer	2410
Shaft sleeve spacer	2460a
Mechanical seal support ring	2460b
Impeller thickness washer	2460d
Impeller/snap ring support rin	2520
Thrower	2540
Shaft end washer	2911a/b
Stage housing with bearing	3044

Designation	reference no
Lantern ring mount	3180
Shaft sleeve for bearing	3400
Mechanical seal	4220/4240
•friction faces	
•membrane	
•spring	
O-rings	4610a/b/c
Plugs	6515/6521
1/2 snap ring	6545
M8 screws (motor stud bolts)	6571
Equipped motor casing	8110
Rotor shaft	9220

Designation	reference no
Terminal cover gasket	9460
Fan	9820
Fan cover	9822
Terminal cover	9825
Rear bearing shroud	9831
Capacitor	9860
Shaft end nut	9923a
Spring washer	9944
Spring pin	9966

MUV

HYDRAULIC PERFORMANCE

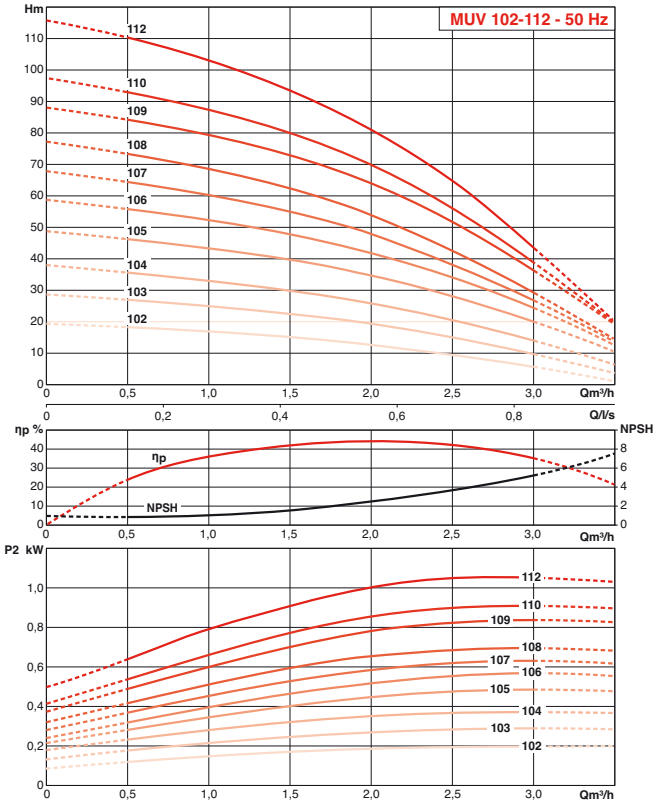

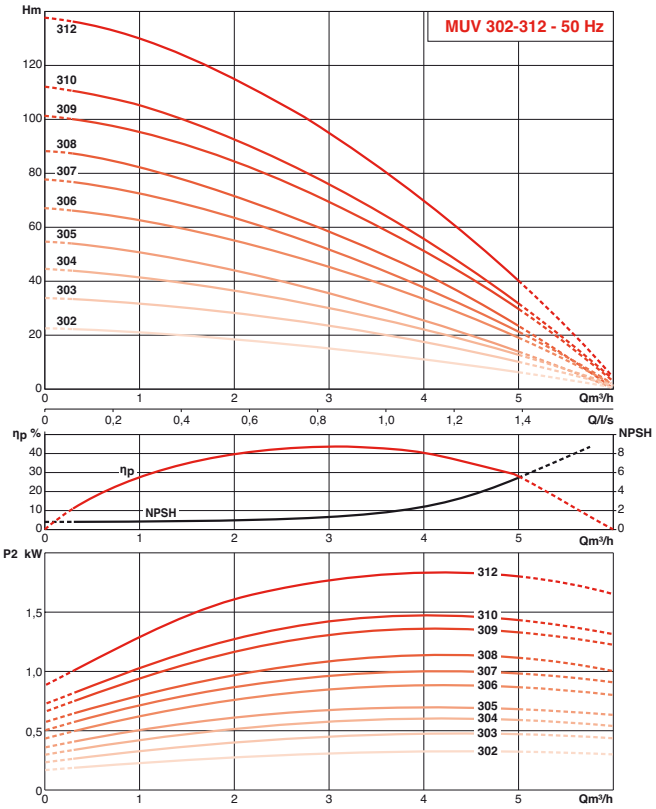

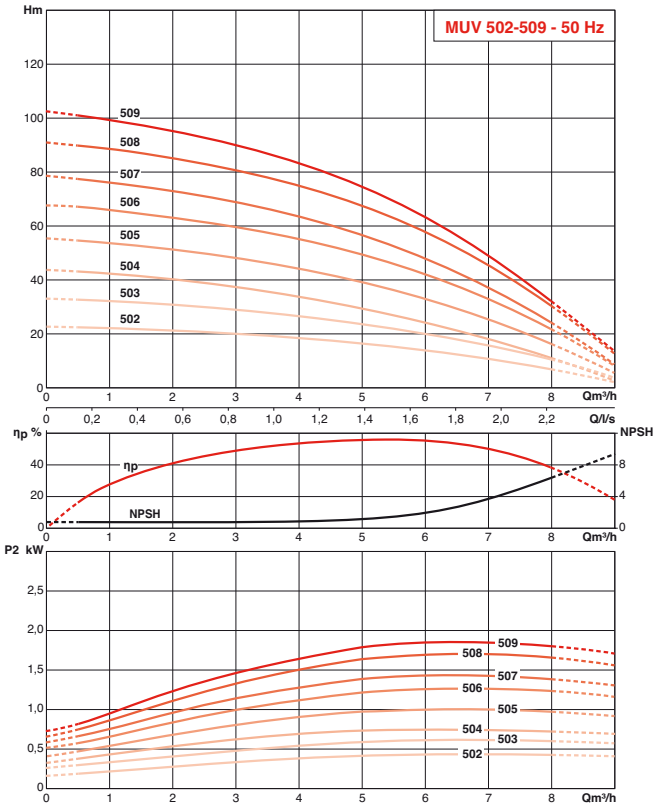

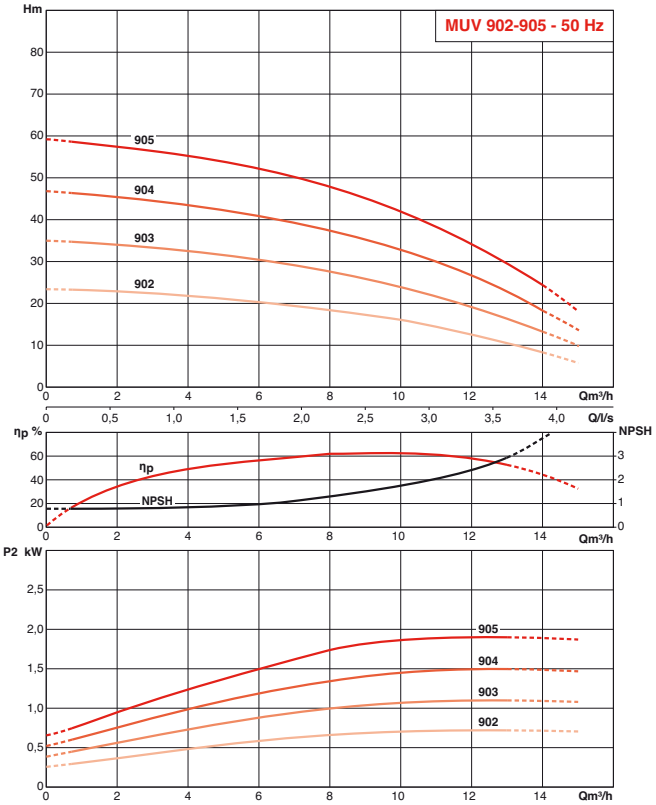

INSTALLATION DIAGRAMS

• **Flooded suction pump on storage tank or mains water system (with low-water protection system)**

• **Pump in suction mode**

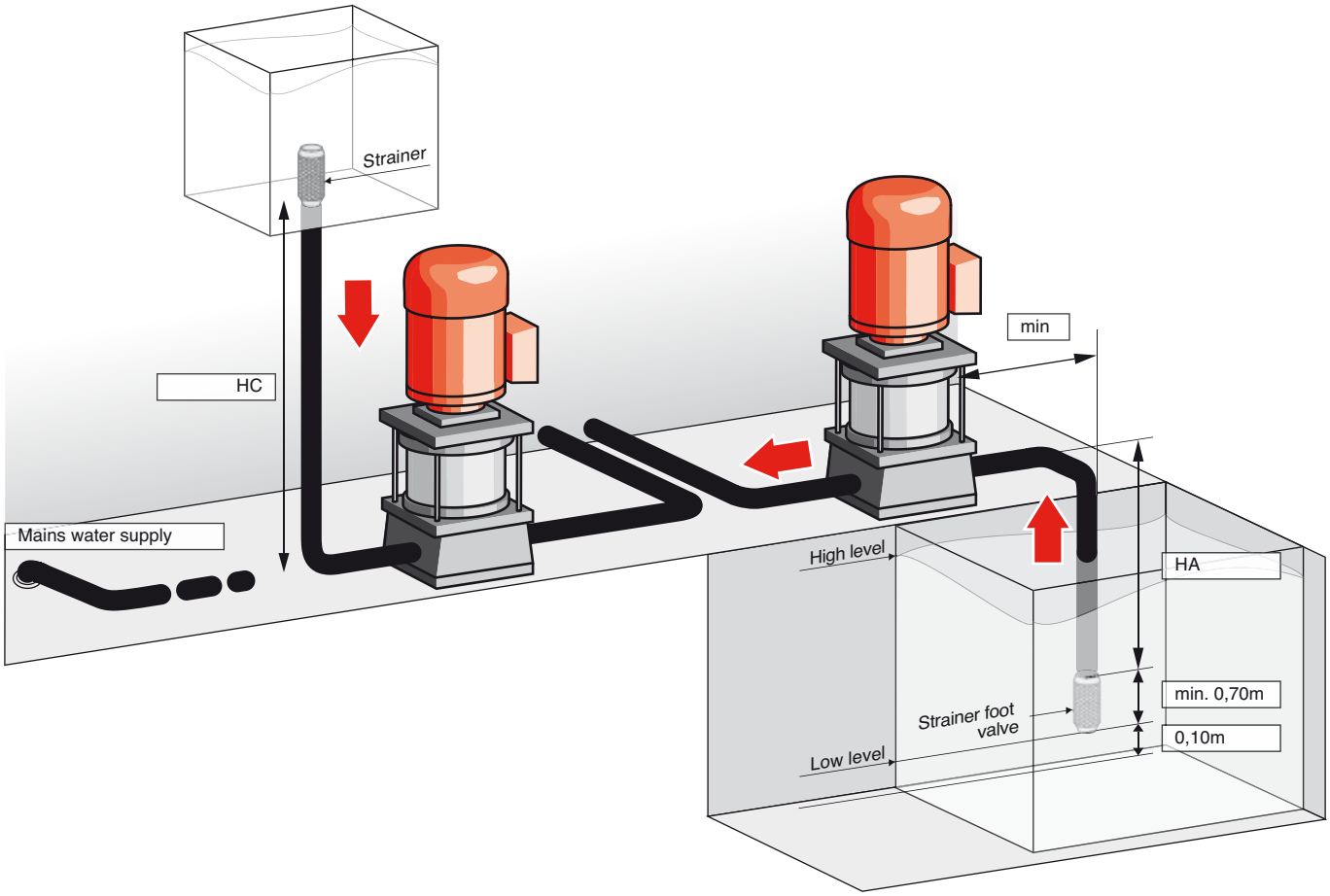

MUV

ELECTRICAL AND DIMENSIONAL SPECIFICATIONS

MUV 1/3/5 - 6"
PN16 - D32

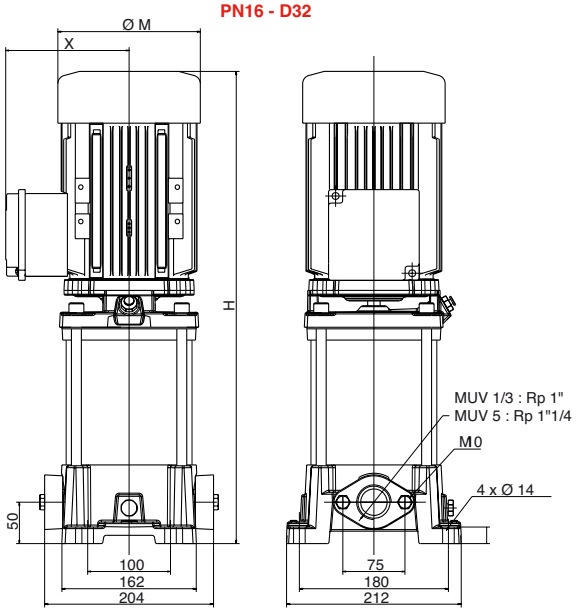

MUV 9 - 6"
PN16 - D50

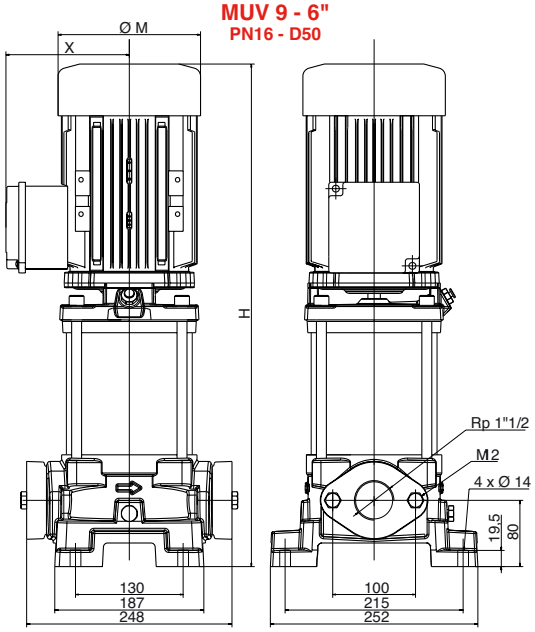

TYPE	P2	Efficiency according to load %			1x 230	3x230	3x400	Pmax	H	M	X	Weight	μF	DN
	kW	4/4	3/4	2/4	A	A	A	Bar	mm	mm	mm	kg	(single-phase version)	
MUV102	0,37	-	-	-	4	1,7	1	10	418	121	110	17,5	15	32
MUV103	0,37	-	-	-	4	1,7	1	10	418	121	110	17,8	15	32
MUV104	0,37	-	-	-	4	1,7	1	10	418	121	110	18,1	15	32
MUV105	0,55	-	-	-	4	3,1	1,8	10	438	121	110	18,4	15	32
MUV106	0,55	-	-	-	4	3,1	1,8	16	458	121	110	18,7	15	32
MUV107N	0,75	79	78,6	75,1	4,7	3,1	1,8	16	485	136	118	21,9	20	32
MUV108N	0,75	79	78,6	75,1	4,7	3,1	1,8	16	525	136	118	22,2	20	32
MUV109N	1,1	80,1	80,2	77,6	7,5	4,2	2,4	16	525	136	118	22,5	25	32
MUV110N	1,1	80,1	80,2	77,6	7,5	4,2	2,4	16	545	136	118	22,8	25	32
MUV112N	1,1	80,1	80,2	77,6	7,5	4,2	2,4	16	585	136	118	23,3	25	32
MUV302	0,37	-	-	-	4	1,7	1	10	410	121	110	17,6	15	32
MUV303	0,55	-	-	-	4	3,1	1,8	10	410	121	110	17,9	15	32
MUV304N	0,75	79	78,6	75,1	4,7	3,1	1,8	10	441	136	118	21,3	20	32
MUV305N	0,75	79	78,6	75,1	4,7	3,1	1,8	16	465	136	118	21,7	20	32
MUV306N	1,1	80,1	80,2	77,6	7,5	4,2	2,4	16	489	136	118	20,4	25	32
MUV307N	1,1	80,1	80,2	77,6	7,5	4,2	2,4	16	513	136	118	22,4	25	32
MUV308N	1,5	82,1	81,6	78,4	9,6	5,6	3,3	16	544	156	126	25,7	40	32
MUV309N	1,5	82,1	81,6	78,4	9,6	5,6	3,3	16	592	156	126	26,1	40	32
MUV310N	1,5	82,1	81,6	78,4	9,6	5,6	3,3	16	592	156	126	26,5	40	32
MUV312N	2,2	83,4	84	82,9	-	7	4,1	16	640	156	126	27,2	-	32
MUV502	0,55	-	-	-	4	3,1	1,8	10	410	121	110	17,7	15	32
MUV503N	0,75	79	78,6	75,1	4,7	3,1	1,8	10	417	136	118	21,1	20	32
MUV504N	1,1	80,1	80,2	77,6	7,5	4,2	2,4	10	441	136	118	21,5	25	32
MUV505N	1,1	80,1	80,2	77,6	7,5	4,2	2,4	16	465	136	118	21,8	25	32
MUV506N	1,5	82,1	81,6	78,4	9,6	5,6	3,3	16	496	156	126	25,2	40	32
MUV507N	1,5	82,1	81,6	78,4	9,6	5,6	3,3	16	520	156	126	25,6	40	32
MUV508N	2,2	83,4	84	82,9	-	7	4,1	16	544	156	126	26,0	-	32
MUV509N	2,2	83,4	84	82,9	-	7	4,1	16	592	156	126	26,3	-	32
MUV902N	0,75	79	78,6	75,1	4,7	3,1	1,8	10	463	136	118	23,5	20	50
MUV903N	1,1	80,1	80,2	77,6	7,5	4,2	2,4	10	463	136	118	23,9	25	50
MUV904N	1,5	82,1	81,6	78,4	9,6	5,6	3,3	10	500	156	126	27,3	40	50
MUV905N	2,2	83,4	84	82,9	-	7	4,1	16	530	156	126	27,8	-	50

RECOMMENDED ACCESSORIES



• ACSON: on/off control and low-water protection device.



•Protective slave switch for three-phase motor

• Strainer foot valve



• Non-return valve





• Shut-off valve

• Vibration-damping sleeves



• Vibration-damping sleeves



• Bladder tank



• Surge tank



FEATURES

a) Electrical

- "T" types: 230-400 V - 50 Hz three-phase
- M" types: - 230 V - 50 Hz single-phase with capacitor integrated into the terminal box.
- Three-phase motors MUST be protected by a slave switch.
- Stuffing box used for connections to the motor terminal box.

b) Fitting

- On solid base using foundation bolts.
- Installation of pump in suction mode with compulsory strainer foot valve, or flooded suction mode on storage tank or mains water system with low water protection kit.
- Connection to pump via a flexible hose or rigid piping.
- The installation must allow for the protection of the pump against adverse weather conditions and frost (avoid direct exposure to rain or sun).

c) Packaging

Pump delivered in cardboard packaging, without connection fittings.

OPTIONS AND ACCESSOIRES

- Shut-off valves
- Non-return valves
- Strainer foot valve
- Vibration-damping sleeves
- Suction kit
- Bladder or galvanised tanks
- Surge tanks
- ME low-water protection kit
- ACSON: on/off control and low-water protection device
- Protective slave switch for three-phase motor…

MUV

NOTES

OPERATING RANGES

Flow rates of up to:	**25 m³/h**
Manometric heads of up to:	**70 m CE**
Max. operating pressure:	**10 bar**
Max. intake pressure:	**6 bar**
Temperature range:	**– 15° to + 110°C**
Max. ambient temperature:	**+ 40°C**
DN (nominal diameter) of ports:	**G1¼ to G2**

MULTI-H

HORIZONTAL Stainless steel MULTISTAGE PUMPS

2 pole - 50 Hz

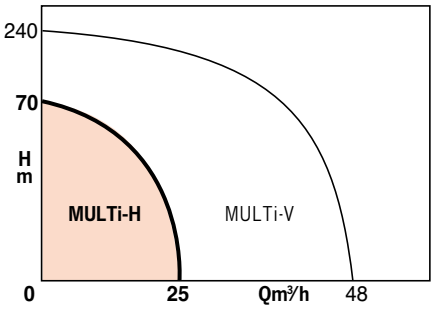

APPLICATIONS

Pumping of clean, non-muddy liquids in the housing, agricultural and industrial sectors:
- Supply - Boosting
- Watering - Irrigation
- Washing stations
- Drainage -Filling (pools, swimming pools...)
- Heating - Air conditioning
- Water treatment (demineralisation, filtration...)

And for incorporation into all modular systems.
Abstraction from wells, springs, rivers, ponds...

Pumped fluids
- 304 range: clear and non-corrosive liquids (drinking water, glycol water...).
- 316L range: corrosive liquids (demineralised seawater, chlorinated water...).

ADVANTAGES

EFFICIENCY / RELIABILITY
- **IE2 motor.**
- **Optimal reliability: high outputs thanks to the impeller profile, which reduces the number of stages, the sizes of the shafts and the axial thrusts.**
- **Stainless steel hydraulic assembly: protection from corrosion and extended pump life.**
- **Suction rings between very thick cells: impervious to thermal expansion and eliminates the risk of seizing.**

INSTALLATION
- **Compact pump of one-piece design, requires little space and performs economically and quietly.**
- **Easy installation.**

MAINTENANCE
- **Standardised mechanical seal withstands max. temperatures of +110°C without any maintenance.**
- **Motor bearing fitted in the front shroud - generously dimensioned and leak-tight.**



• MULTI-H with three-phase motor

Certified ACS



• MULTI-H with single-phase motor

• ALL STAINLESS STEEL hydraulic assembly



MULTI-H

DESIGN

• Hydraulic part

ALL Stainless steel

- Horizontal, centrifugal, not self-priming.
- Multi-stage, 2 to 6 stages.
- Axial intake and vertical, upward delivery.
- Impellers fitted directly onto the extended motor shaft.
- Standardised mechanical seal ensures leak-tightness of shaft passage.
- Hydraulic assembly fixed to a lantern ring at 8 points.

• Motor

- IE2 standard ventilated
- With extended shaft end
- Single-phase motor with integrated thermal protection and automatic reset; capacitor integrated into the terminal box.
- Rotor-shaft guide bearings lubricated for life.

Rotation speed:	2900 rpm
Three-phase winding:	230-400 V
Single-phase:	230 V
Frequency:	50 Hz (optional 60 Hz)
Insulation class:	155 (F)
Protection class:	IP 54

HYDRAULIC PRESELECTION RANGE

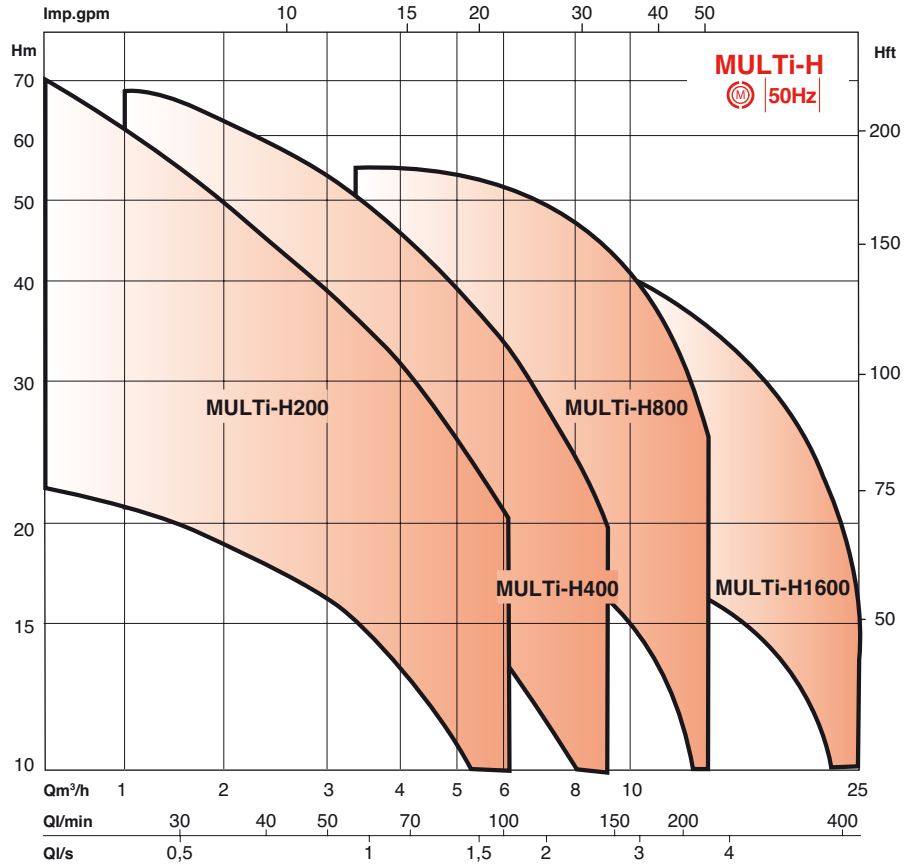

BASIC CONSTRUCTION

Main parts	Material	
	Non-corrosive liquids	Corrosive liquids*
Housing casing	S steel 304	S steel 316 L
Impellers	S steel 304	S steel 316 L
Cells (stage housing)	S steel 304	S steel 316 L
Pump shaft	S steel 316 L	S steel 316 L
Cell centring device	S steel 304	S steel 316 L
Mechanical seal	Carbon/ Ceramic	Tungsten carbide/ Carbon
O-rings	Ethylene Propylene EPDM	VITON
Plugs	S steel 316L	S steel 316 L
Attachment support bearing	Aluminium	Aluminium

* Except for MULTi-H1600 serie

NOTA : 304 (X2CrNiMo 17.12.2) or 316 L (X2CrNiMo17-12) stainless steel - recommended materials offering excellent corrosion resistance. Clean and clear liquids with no fibres and low sand/silica content (max. concentration 40 g/m3).

IDENTIFICATION

MULTi-H 206 N -S E - M
X V - T

Pump code
HORIZONTALE
MULTI-STAGE
STAINLESS STEEL

Nominal flowrate in m³/h

Number of stages

IE2 motor

S: S steel 304
X: S steel 316L

E : EPDM
V : VITON

T: three-phase motor
M: single-phase motor

SECTIONAL DIAGRAM

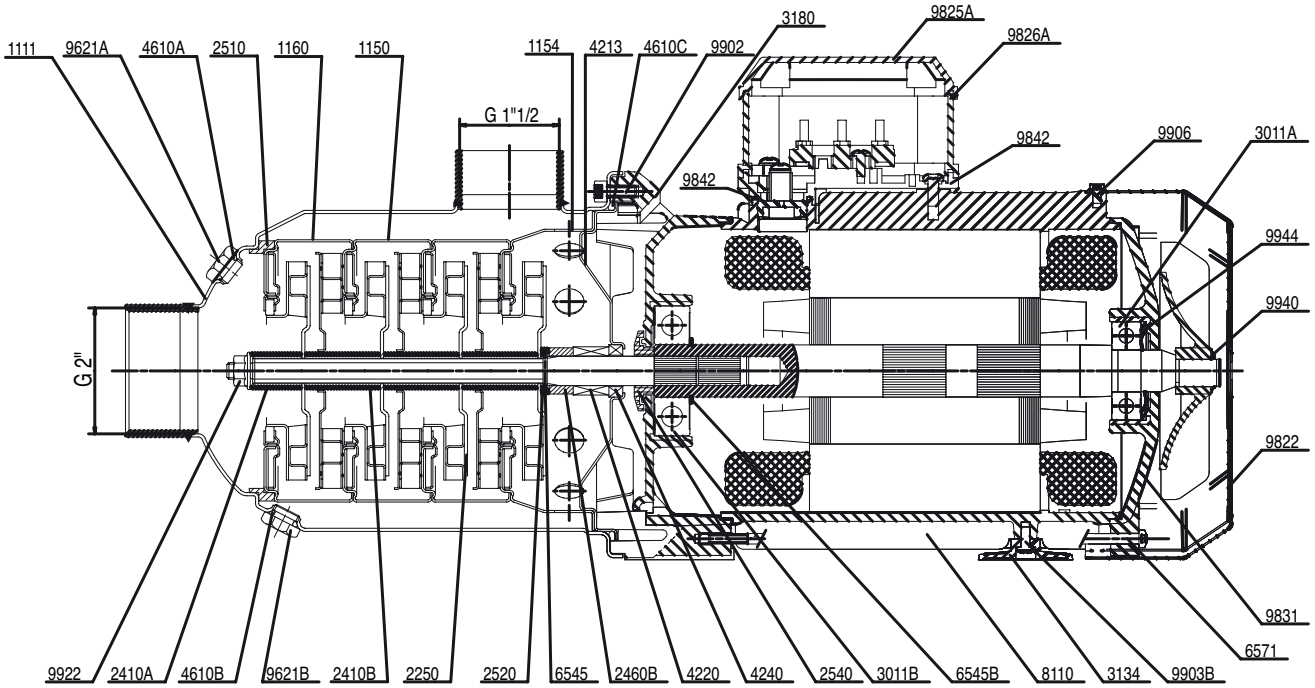

MECHANICAL SEAL

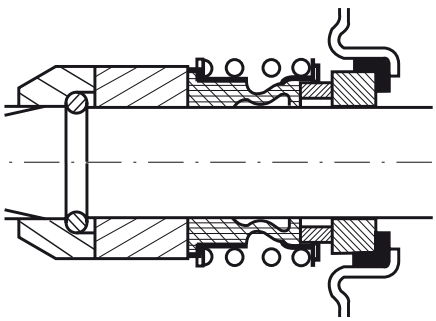

PARTS LIST

1111	- Housing	
• 1150	- Stage housing with interstage crossover	
• 1154	- Stage housing centring device	
• 1160	- Stage housing without interstage crossover	
• 2250	- Impeller	
2410	- Impeller spacer	
2460 A	- Impeller thickness washer	
2460 B	- Mechanical seal spacer	
2520	- Impeller support ring-snap ring	
2540	- Deflector	
2911	- Shaft end washer	
• 3011 A	- Rolling bearing fan side	
• 3011 B	- Rolling bearing pump side	
• 3134	- Motor mounting base	
3180	- Lantern ring	
4213	- Throat bushing casing	
• 4220	- Rotating part	Seal
• 4240	- Fixed part	Mechanical
• 4610 A	- O-ring (filler plug)	
• 4610 B	- O-ring (drain plug)	
• 4610 C	- O-ring (lantern ring housing)	
6515	- Drain plug	
6521	- Bleeding and filling plug	
• 6545	- Snap ring (support ring)	
6571	- Motor assembly stud bolt	
• 8110	- Electric motor housing	
• 9220	- Rotor shaft	
• 9460	- Terminal cover gasket	
• 9820	- Fan	
9822	- Fan housing	
• 9825	- Motor terminal cover	
• 9831	- Rear motor bearing	
• 9860	- Capacitor	
9902 A	- Lantern ring housing attachment screw	
9902 B	- Shaft end screw	
9902 C	- Cleaning screw	
9942	- External tooth lock washer	
9944	- Spring washer	
9966	- Elastic pin	

(•) Recommended spare parts.

MULTI-H

HYDRAULIC PERFORMANCE – SERIES 200 AND 400 - 2 POLE

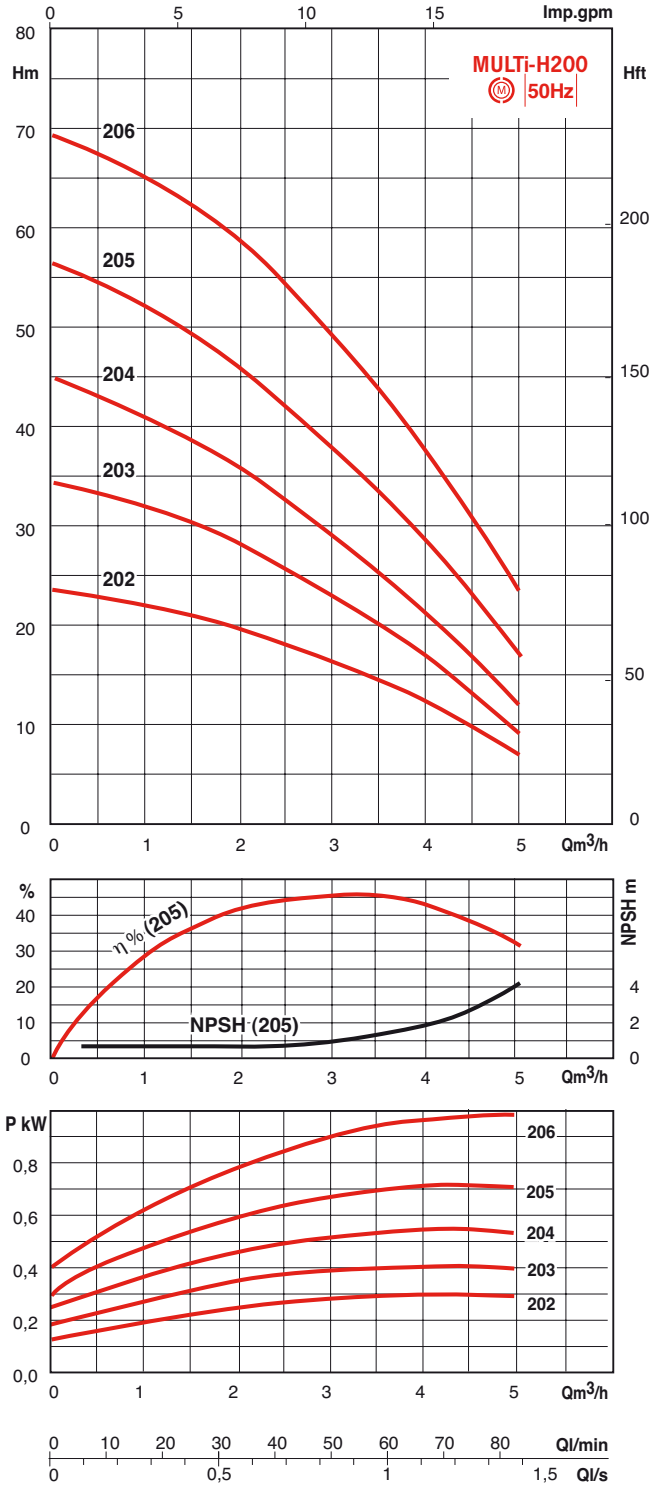

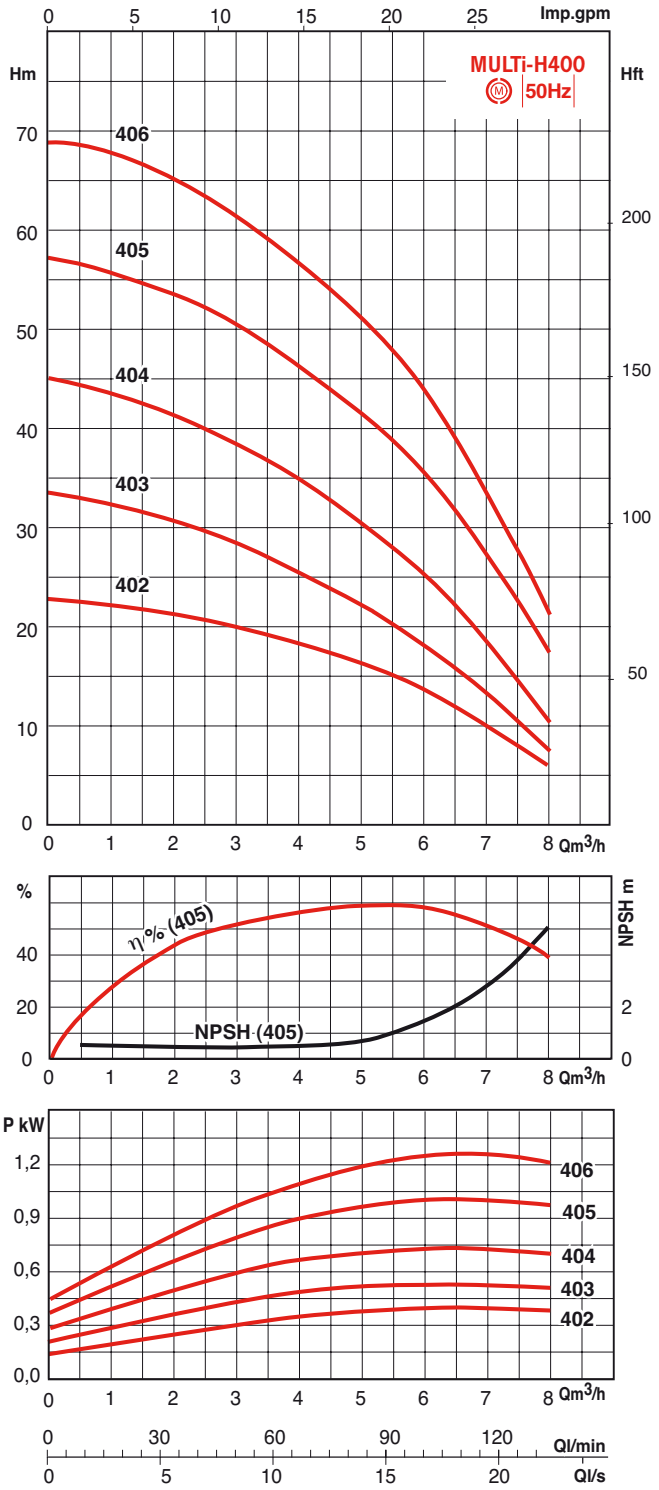

HYDRAULIC PERFORMANCE – SERIES 800 AND 1600 - 2 POLE

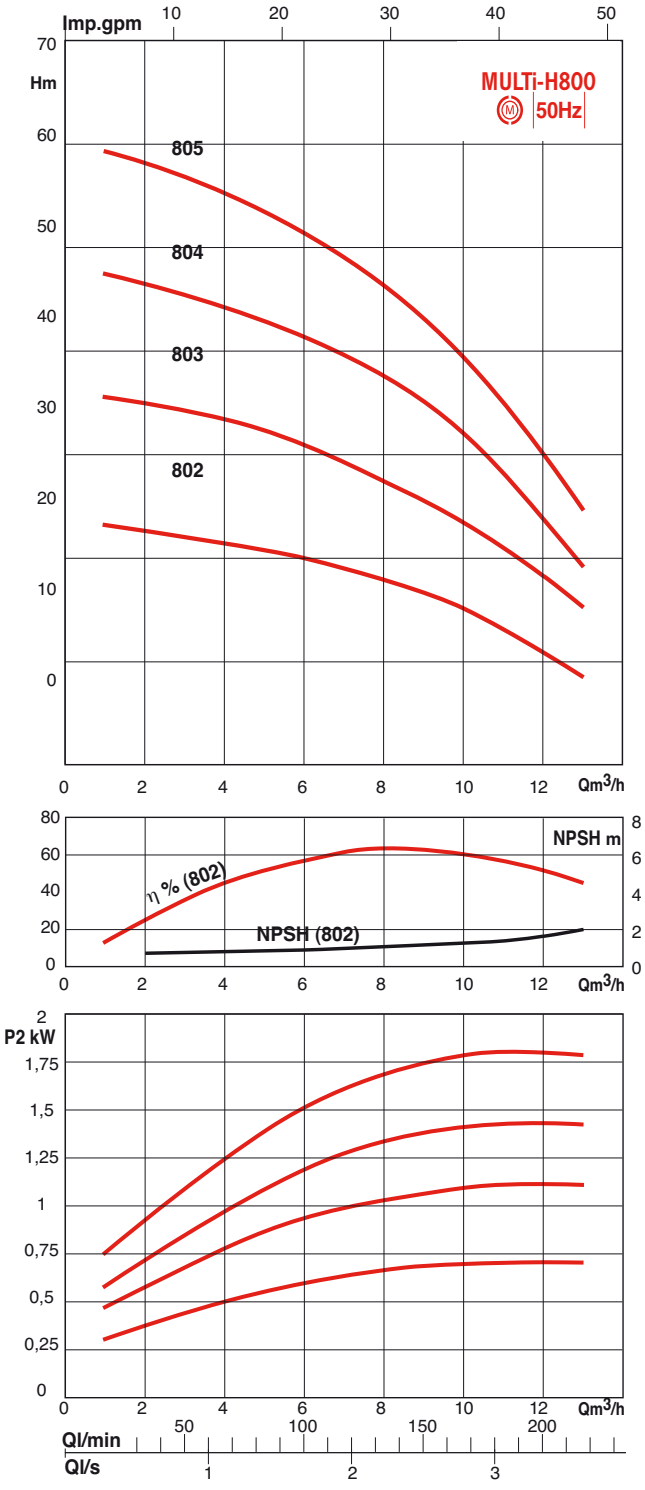

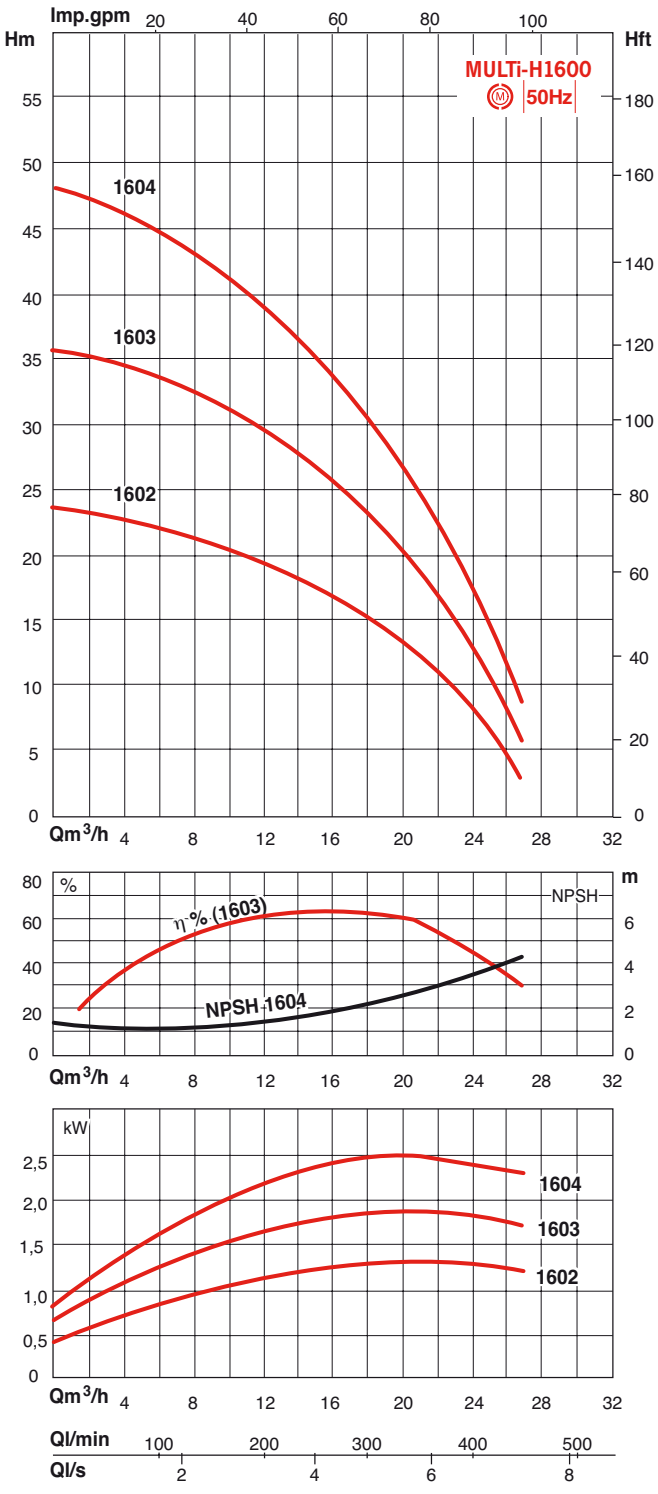

MULTI-H

SECTIONAL VIEW OF THE INSTALLATION

• **Suction pump**

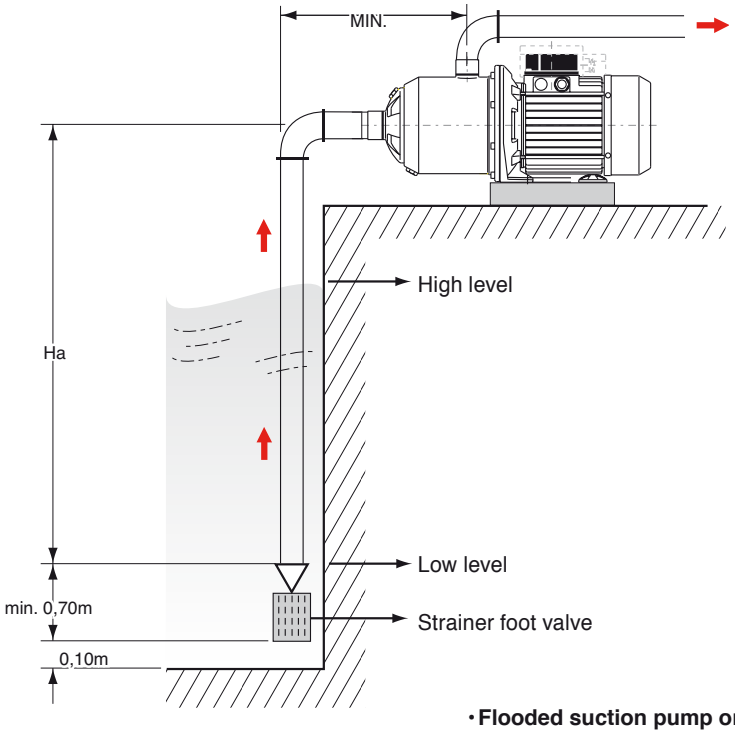

Max. suction heads (Ha) and min. flooded heads (Hc) at the pump's nominal flowrate.

Fluid temperature	MULTi-H 200		MULTi-H 400/800/1600	
	Ha mCL	Hc mCL	Ha mCL	Hc mCL
+ 20°C	7	---	7	---
+ 50°C	6	---	6	---
+ 80°C	2,2	---	3	---
+110°C	---	8,1	---	7

These values do not take account of losses of head in the suction pipe.

• **Flooded suction pump on storage tank or mains water system**
(with low water protection kit)

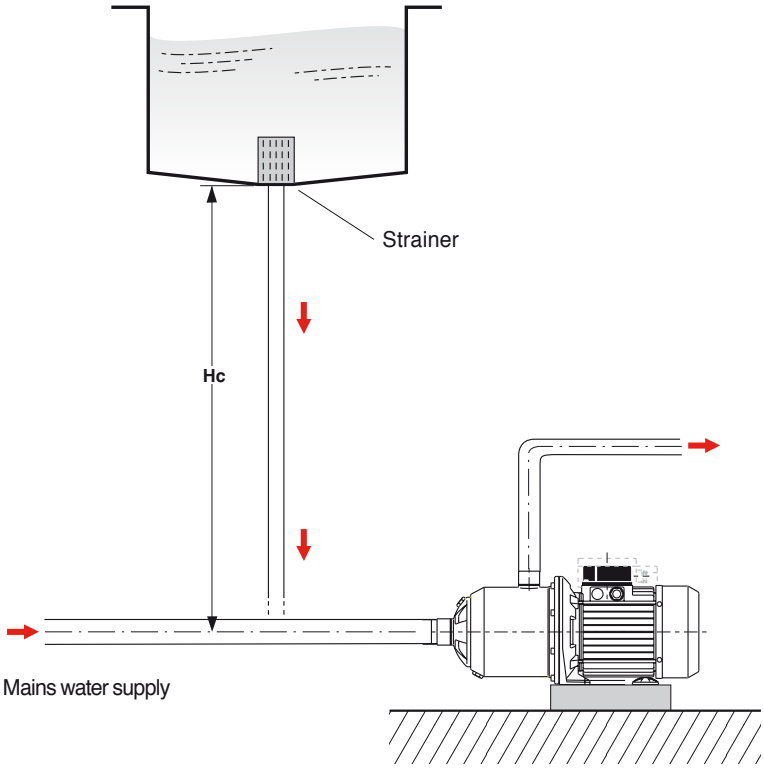

ELECTRICAL DATA AND DIMENSIONS

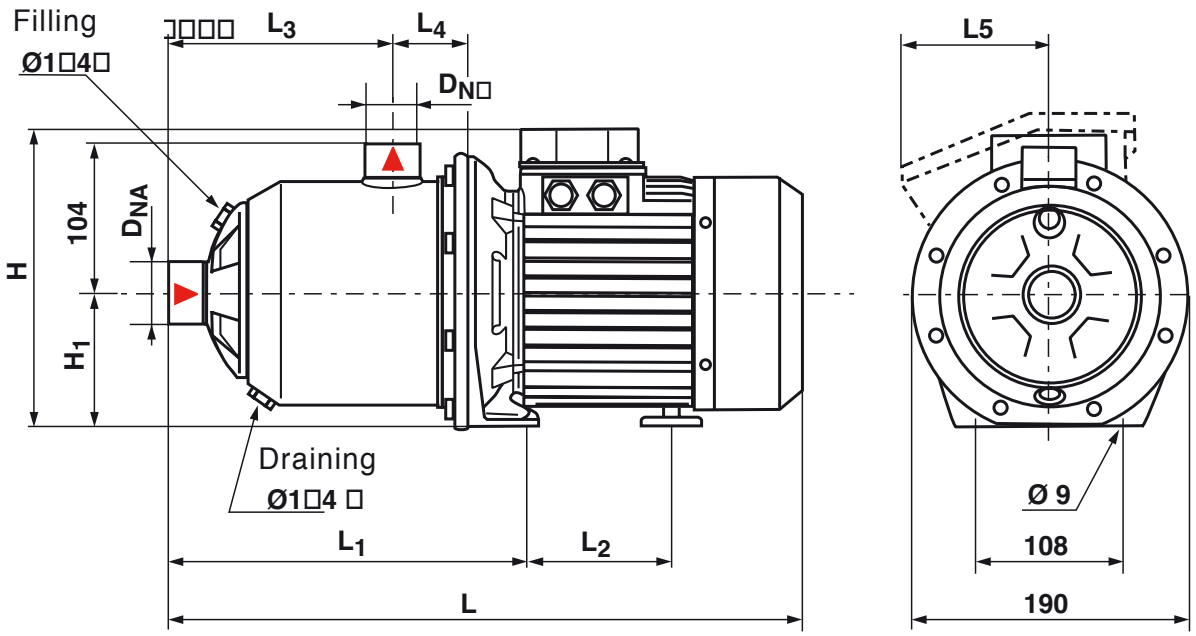

ORDER REFERENCE	MOTOR										PUMP											
	P2	Efficiency according to load (%)			Power factor	Speed	motor voltage			Capacitor	Suction ports.	Ports ref.	H	H1	H2	L	L1	L2	L3	L4	L5	mass
	kW	4/4	3/4	2/4	cos ϕ	rpm	1x230 V	3x230 V	3x400 V	μF	DNA	DNR	mm	mm	mm	mm	mm	mm	mm	mm	mm	kg
MULTI-H202-SE-M	0,55	-	-	-	0,76	2860	4	–	–	12	1	1	216	90	104	375	204	95	109,5	51	106	9,8
MULTI-H202-SE-T	0,55	-	-	-	0,76	2860	–	3	1,7	–	1	1	192	90	104	375	204	95	109,5	51	106	8,9
MULTI-H203-SE-M	0,55	-	-	-	0,76	2860	4	–	–	12	1	1	216	90	104	375	204	95	109,5	51	106	9,8
MULTI-H203-SE-T	0,55	-	-	-	0,76	2860	–	3	1,7	–	1	1	192	90	104	375	204	95	109,5	51	106	8,9
MULTI-H204-SE-M	0,55	-	-	-	0,76	2860	4	–	–	12	1	1	216	90	104	423	252	95	157,5	51	106	10,6
MULTI-H204-SE-T	0,55	-	-	-	0,76	2860	–	3	1,7	–	1	1	192	90	104	423	252	95	157,5	51	106	9,7
MULTI-H205-SE-M	0,75	79	78	76	0,82	2850	5,1	–	–	16	1	1	216	90	104	423	252	95	157,5	51	106	12,2
MULTI-H206-SE-M	1,1	80,5	80,5	78,0	0,82	2850	7,2	–	–	30	1	1	224	90	104	472	276	103,5	181,5	51	106	15,7
MULTI-H402-SE-M	0,55	-	-	-	0,76	2860	4	–	–	12	1¼	1	216	90	104	375	204	95	109,5	51	106	9,8
MULTI-H402-SE-T	0,55	-	-	-	0,76	2860	–	3	1,7	–	1¼	1	192	90	104	375	204	95	109,5	51	106	8,9
MULTI-H403-SE-M	0,55	-	-	-	0,76	2860	4	–	–	12	1¼	1	216	90	104	375	204	95	109,5	51	106	10,7
MULTI-H403-SE-T	0,55	-	-	-	0,76	2860	–	3	1,7	–	1¼	1	192	90	104	375	204	95	109,5	51	106	9,8
MULTI-H404-SE-M	0,75	79	78	76	0,82	2850	5,1	–	–	16	1¼	1	216	90	104	423	252	95	157,5	51	106	12,2
MULTI-H405-SE-M	1,1	80,5	80,5	78,0	0,82	2850	7,2	–	–	30	1¼	1	224	90	104	448	252	103,5	157,5	51	106	15,2
MULTI-H406-SE-M	1,5	82	82	80	0,77	2900	9,2	–	–	40	1¼	1	224	90	104	472	276	103,5	181,5	51	106	17,8
MULTI-H802-SE-M	0,75	79	78	76	0,82	2850	5,1	–	–	16	1½	1¼	216	90	104	387	216	95	121,5	51	106	15,8
MULTI-H803-SE-M	1,1	80,5	80,5	78,0	0,82	2850	7,2	–	–	30	1½	1¼	224	90	104	412	216	103,5	121,5	51	106	14,5
MULTI-H804-SE-M	1,5	82	82	80	0,77	2900	9,2	–	–	40	1½	1¼	224	90	104	472	276	103,5	181,5	51	106	16

ORDER REFERENCE	MOTOR								PUMP												
	P2	Efficiency according to load (%)			Power factor	Speed	motor voltage		Suction ports.	Ports ref.	H	H1	H2	L	L1	L2	L3	L4	L5	mass
	kW	4/4	3/4	2/4	cos ϕ	rpm	3x230 V	3x400 V	DNA	DNR	mm	mm	mm	mm	mm	mm	mm	mm	mm	kg
MULTI-H205N-SE-T	0,75	79	78	76	0,82	2850	3,2	1,85	1	1	219	90	104	457	252	110	157,5	52	52	13
MULTI-H206N-SE-T	1,1	80,5	80,5	78,0	0,82	2850	4,3	2,5	1	1	219	90	104	481	276	110	181,5	52	52	13,8
MULTI-H404N-SE-T	0,75	79	78	76	0,82	2850	3,2	1,85	1¼	1	219	90	104	457	252	110	157,5	52	52	13
MULTI-H405N-SE-T	1,1	80,5	80,5	78,0	0,82	2850	4,3	2,5	1¼	1	219	90	104	457	252	110	157,5	52	52	13,8
MULTI-H406N-SE-T	1,1	80,5	80,5	78,0	0,82	2850	4,3	2,5	1¼	1	219	90	104	481	276	110	181,5	52	52	16
MULTI-H802N-SE-T	0,75	79	78	76	0,82	2850	3,2	1,85	1½	1¼	219	90	104	421	216	110	121,5	52	52	12,3
MULTI-H803N-SE-T	1,1	80,5	80,5	78,0	0,82	2850	4,3	2,5	1½	1¼	219	90	104	421	216	110	121,5	52	52	13,1
MULTI-H804N-SE-T	1,5	82	82	80	0,77	2900	5,7	3,3	1½	1¼	240	90	104	523	276	148	181,5	52	52	19,1
MULTI-H805N-SE-T	2,2	84	84	82	0,89	2900	8,8	5,1	1½	1¼	240	90	104	523	276	148	181,5	52	52	20,5
MULTI-H1602N-SE-T	1,5	82	82	80	0,77	2900	5,7	3,3	2	1½	240	90	105	482	236	148	138	55	52	19
MULTI-H1603N-SE-T	2,2	84	84	82	0,89	2900	8,8	5,1	2	1½	240	90	105	482	235,5	148	138	55	52	21,4
MULTI-H1604N-SE-T	2,2	84	84	82	0,89	2900	8,8	5,1	2	1½	240	90	105	526	280,5	148	183	55	52	22,1

MULTI-H

RECOMMENDED ACCESSORIES

• ACSON : ON/OFF control device and protection against lack of water.



• Protective slave switch for three-phase motor



• Water hammer tank



• Bladder tank



• Shut-off valve



• Strainer foot valve



• Non-return valve



• Vibration-damping sleeves





FEATURES

a) Electrical

- IE2 “T” types: 230-400 V - 50 Hz three-phase
- “M” types: - 230 V - 50 Hz single-phase with capacitor integrated into the terminal box.
- Three-phase motors MUST be protected by a slave switch.
- Stuffing box used for connections to the motor terminal box

Provide a switch and low-water protection box in both single-phase and three-phase.

b) Fitting

- On solid base using foundation bolts.
- Installation of pump in suction mode with compulsory strainer foot valve, or flooded suction mode on storage tank or mains water system with low water protection kit.
- Connection to pump via a flexible hose or rigid piping.
- The installation must allow for the protection of the pump against adverse weather conditions and frost (avoid direct exposure to rain or sun).

c) Packaging

Pump delivered in cardboard packaging, without connection fittings.

d) Maintenance

Replacement of recommended spare parts (•) subject to wear.

OPTIONS AND ACCESSORIES

- Shut-off valves
- Non-return valves
- Strainer foot valve
- Vibration-damping sleeves
- Suction kit
- Bladder or galvanised tanks
- Water hammer tanks
- ME low-water protection kit
- ACSON: ON/OFF control device and protection against lack of water
- Protective slave switch for three-phase motor…

HYDROMINI MULTI-H

OPERATING RANGES

Flow rates of up to:	**8 m³/h**
Manometric heads of up to:	**55 m**
Max. operating pressure:	**4 bar**
Max. temperature:	**+50°C**
Max. suction head:	**7 m**
DN suction:	**1" - 1"1/4**
DN delivery:	**1"**

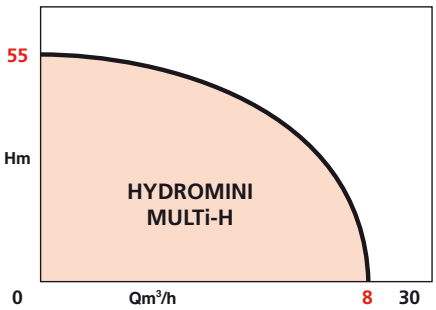

APPLICATIONS

Pressure maintenance for water distribution systems with insufficient or non-existent pressure in the domestic and small-scale collective sectors:

- Water supply and distribution from wells, springs or storage tanks.
- Irrigation - watering.
- Raising the pressure of a weak mains water system (if the total pressure does not exceed 4 bar).

For detached houses, rural homes, small farms, small-scale industries...

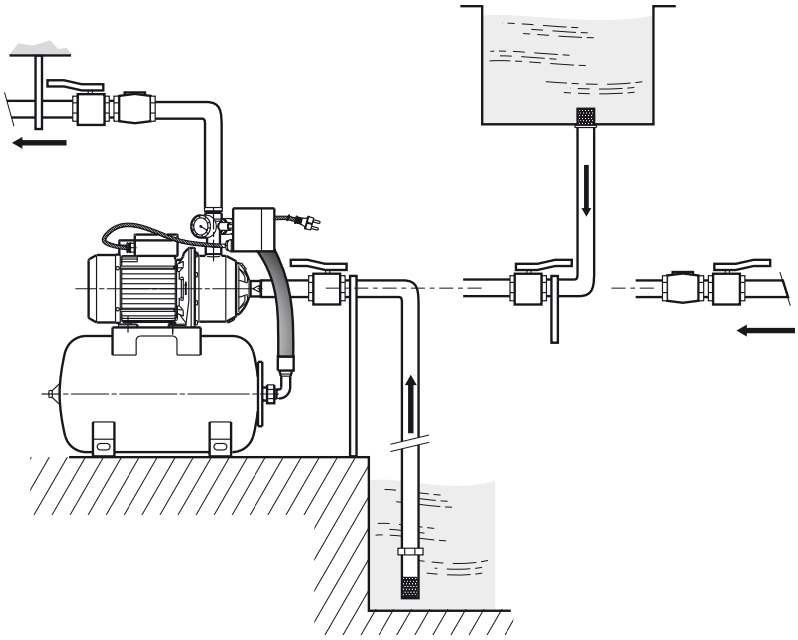

Certified ACS



• HYDROMINI MULTi-H

ADVANTAGES

- **Fully assembled, wired and preset booster pumps - ready to use.**
- **Easy installation: one electrical connection and two hydraulic connections.**
- **Stainless steel hydraulic assembly.**
- **Interchangeable butyl, food-grade bladder tank.**
- **Integrated thermal protection of motor on all models.**
- **User-friendly operation and maintenance at low cost**

DESIGN

Automatic booster pumps, pre-assembled and ready for fitting, equipped with:

- MULTi-H single-phase or three-phase pump (203; 204; 205; 404; 405)
- Tank with an interchangeable bladder (24, 50 and 100 l)
- Filler plug
- Drain plug
- Cable and plug (single-phase version)
- Pump/tank connection hose
- Inflation valve
- Pressure gauge and pressure switch.

HYDROMINI SINGLE-PHASE

- Thermal protection integrated into the winding, automatic resetting after cooling.

HYDROMINI THREE-PHASE

- Thermal protection of motor integrated into the pressure switch; manual resetting.

The installation must allow for the protection of the pump against adverse weather conditions and frost (avoid direct exposure to rain or sun).
The setting of on-off pressures on the contact or pressure switch is carried out in the factory.
Standards: EN 60335-2-41

HYDROMINI MULTI-H

HYDRAULIC, ELECTRICAL AND DIMENSIONAL SPECIFICATIONS

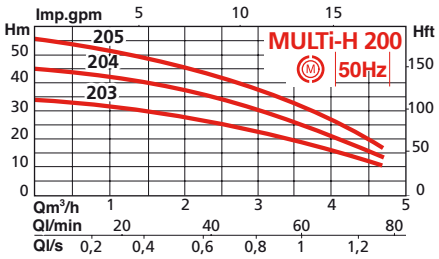

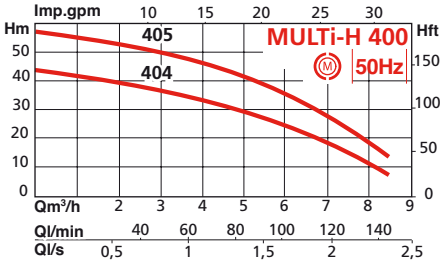

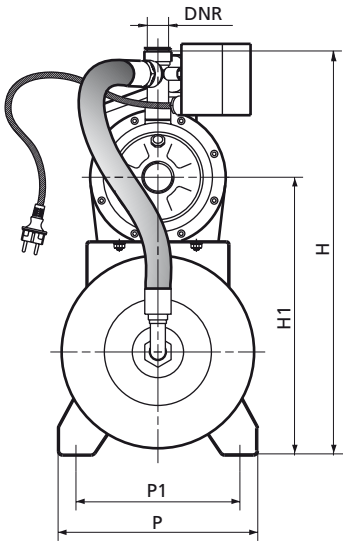

Product	DNA	DNR	Voltage	Volume	H	L	P	H1	L1	L2	P1	X	X1
			50Hz	L	mm	mm	mm	mm	mm	mm	mm	mm	mm
Multi-H-203-M-H20	1”	1”	1~230 V	20	570	500	280	385	220	170	230	110	375
Multi-H-203-M-H50	1”	1”	1~230 V	50	655	700	360	470	350	300	280	110	375
Multi-H-203-M-H100	1”	1”	1~230 V	100	750	820	450	565	400	350	320	110	375
Multi-H-203-T-H20	1”	1”	3~230/400 V	20	570	500	280	385	220	170	230	110	375
Multi-H-203-T-H50	1”	1”	3~230/400 V	50	655	700	360	470	350	300	280	110	375
Multi-H-203-T-H100	1”	1”	3~230/400 V	100	750	820	450	565	400	350	320	110	375
Multi-H-204-M-H20	1”	1”	1~230 V	20	570	500	280	385	220	170	230	158	423
Multi-H-204-M-H50	1”	1”	1~230 V	50	655	700	360	470	350	300	280	158	423
Multi-H-204-M-H100	1”	1”	1~230 V	100	750	820	450	565	400	350	320	158	423
Multi-H-204-T-H20	1”	1”	3~230/400 V	20	570	500	280	385	220	170	230	158	423
Multi-H-204-T-H50	1”	1”	3~230/400 V	50	655	700	360	470	350	300	280	158	423
Multi-H-204-T-H100	1”	1”	3~230/400 V	100	750	820	450	565	400	350	320	158	423
Multi-H-205-M-H20	1”	1”	1~230 V	20	570	500	280	385	220	170	230	158	423
Multi-H-205-M-H50	1”	1”	1~230 V	50	655	700	360	470	350	300	280	158	423
Multi-H-205-M-H100	1”	1”	1~230 V	100	750	820	450	565	400	350	320	158	423
Multi-H-205N-T-H20	1”	1”	3~230/400 V	20	597	500	280	385	220	170	230	158	457
Multi-H-205N-T-H50	1”	1”	3~230/400 V	50	682	700	360	470	350	300	280	158	457
Multi-H-205N-T-H100	1”	1”	3~230/400 V	100	777	820	450	565	400	350	320	158	457
Multi-H-404-M-H20	1”1/4	1”	1~230 V	20	570	500	280	385	220	170	230	158	423
Multi-H-404-M-H50	1”1/4	1”	1~230 V	50	655	700	360	470	350	300	280	158	423
Multi-H-404-M-H100	1”1/4	1”	1~230 V	100	750	820	450	565	400	350	320	158	423
Multi-H-404N-T-H20	1”1/4	1”	3~230/400 V	20	597	500	280	385	220	170	230	158	457
Multi-H-404N-T-H50	1”1/4	1”	3~230/400 V	50	682	700	360	470	350	300	280	158	457
Multi-H-404N-T-H100	1”1/4	1”	3~230/400 V	100	777	820	450	565	400	350	320	158	457
Multi-H-405-M-H20	1”1/4	1”	1~230 V	20	570	500	280	385	220	170	230	158	448
Multi-H-405-M-H50	1”1/4	1”	1~230 V	50	655	700	360	470	350	300	280	158	448
Multi-H-405-M-H100	1”1/4	1”	1~230 V	100	750	820	450	565	400	350	320	158	448
Multi-H-405N-T-H20	1”1/4	1”	3~230/400 V	20	597	500	280	385	220	170	230	158	457
Multi-H-405N-T-H50	1”1/4	1”	3~230/400 V	50	682	700	360	470	350	300	280	158	457
Multi-H-405N-T-H100	1”1/4	1”	3~230/400 V	100	777	820	450	565	400	350	320	158	457

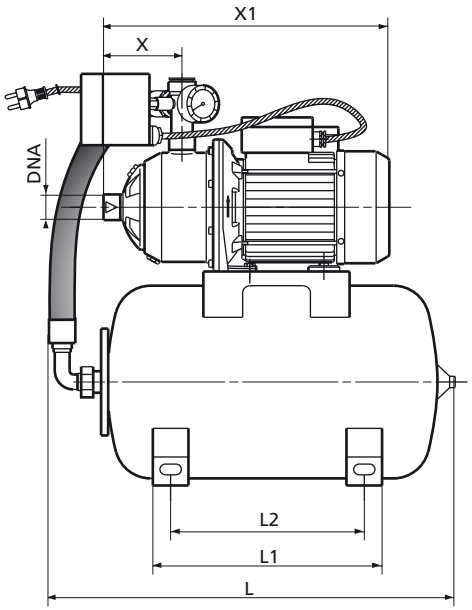

TANKS

Mean flow rate:	2 000 to 8 000 l/h
Capacity:	20 to 100 l
Pressure on:	1,5 to 2 bar
Pressure off:	3 to 3,5 bar
DN (nominal diameter) suction:	1” - 1”1/4
DN delivery:	1”

- **Low-water protection kit**
  for connecting HYDROMINI to the mains system.



RECOMMENDED ACCESSORIES

- Strainer foot valve (max. flow section 1 mm).
- 1/4 T valve on suction.
- 1/4 T valve on delivery.
- Non-return valve
- Pipe hanger.
- Low-water protection kit (connection to mains system).
- Float switch, pressure switch or PMS

OPERATING RANGES

Flow rates of up to :	**10 m³/h**
Manometric heads of up to:	**80 mCE**
Max. delivery pressure:	**10 bar**
Max. intake pressure:	**6 bar**
Temperature range:	**-15° to +110°C***
Max. ambient temperature:	**+ 40°C**
DN (nominal diameter) of ports:	**1" to 1"1/4**

* according to mechanical seal and gasket

MULTI-HE SINGLE-PHASE

HORIZONTAL STAINLESS STEEL MULTISTAGE PUMPS

with integral EVS*
50/60 Hz
2 ranges: 304 stainless steel and 316L stainless steel

*** Electronic Variation Speed**

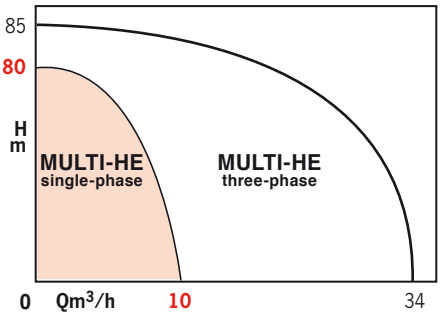

APPLICATIONS

Pumping of clean, non-muddy liquids in the housing and agricultural sectors.

- Supply - Boosting
- Watering - Irrigation
- High-pressure washing
- Heating - Air conditioning
- Water treatment.

Incorporation into modular pressure-boosting systems designed for the building market.

Pumped fluids:

- **304 S.steel range**: clear and non-corrosive liquids (drinking water, glycol water)
- **316L S.Steel range**: corrosive liquids (demineralised seawater, chlorinated water…).

EVS

Certified ACS

ADVANTAGES

- **Fewer mechanical and electrical constraints compared to a standard pump:**
  - **No more consecutive starting and stopping,**
  - **Flexibility of use, with smoother operation and less water hammer when the pump starts up,**
  - **Adjustment to the installation through the precise setting of speed and pressure.**
- **Quieter operation due to the adaptation of the pump speed to the requirements.**
- **User-friendly installation and use due to easy installation and operation.**
- **Economic:**
  - **Optimisation of the complete pump + IE2 motor + converter product, guaranteeing energy savings.**
  - **A single pump covers a complete range of standard pumps.**
  - **A single point of contact and a single supplier for a complete automatic system.**

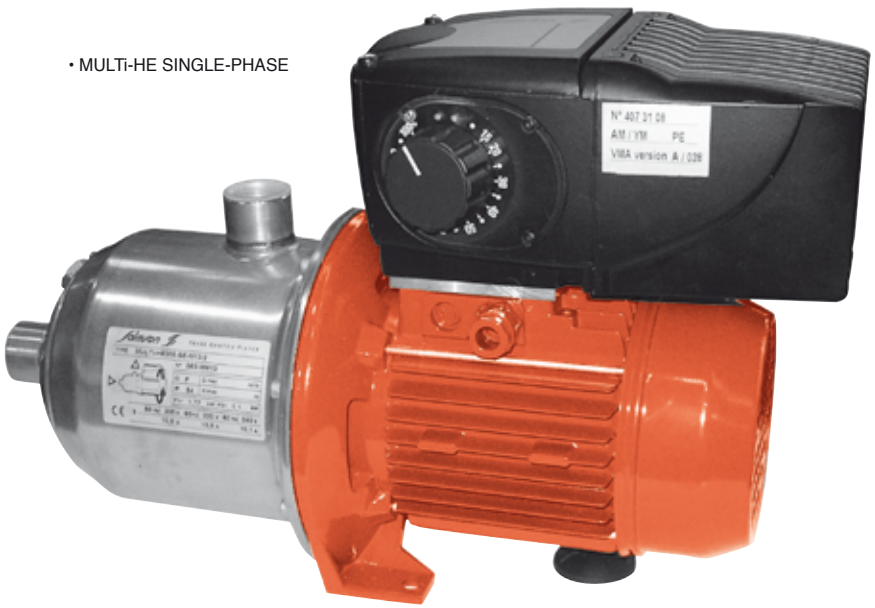

• MULTI-HE SINGLE-PHASE

MULTI-HE SINGLE-PHASE

DESIGN

• Hydraulic part

- All stainless steel.

- Multi-stage
- Centrifugal with horizontal axis
- Tapped suction/delivery ports.
- Axial intake and radial, upward delivery.
- Standardised mechanical seal ensures leak-tightness of shaft passage.

• Motor part

Dry motor, 2 poles, equipped with EVS.

Single-phase winding:	230 V ± 10%, 50 Hz
	220 V ± 6%, 60 Hz
	240 V ± 6%, 60 Hz
Frequency:	50 and 60 Hz
Insulation class:	155 (F)
Protection class:	IP54

BASIC CONSTRUCTION

Main parts	Material	
	Non-corrosive liquids	Corrosive liquids
Housing casing	304 S.steel	316 L S.steel
Impellers	304 S.steel	316 L S.steel
Cells (stage housing)	304 S.steel	316 L S.steel
Pump shaft	316 L S.steel	316 L S.steel
Cell centring device	304 S.steel	316 L S.steel
Mechanical seal	Carbon/Tungsten carbide	
	Ceramic	Carbon
O-rings	Ethyl. Propylene EPDM* VITON**	
Plugs	316 L S.steel	316 L S.steel
Attachment support bearing	Aluminium	Aluminium

* T° 120°C — **T°90°C

NB. 304 (X5CrNi18-10) or 316 L (X2CrNiMo17.12.2) stainless steel - materials offering excellent corrosion resistance. Clean and clear liquids with no fibres and low sand/silica content (max. concentration 40g/m3).

IDENTIFICATION

MULTi-HE-402-S E-M2/2/A

- Pump code
- Nominal flow rate (m^3/h)
- Number of stages
- S = 304 stainless steel
  X = 316L stainless steel
- E = EPDM O-rings
  V = Viton O-rings
- M2: 1~ phase, Mode 2
  M13:1~ phase, Modes 1 and 3
- 2 = 2 poles
- Version index

OPERATION

Electronic Variation Speed is a feature of the asynchronous motors on MULTi-HE centrifugal pumps.

The aim is to regulate the speed of the alternating current motor by converting the voltage and frequency of the 220 - 240 V, 50 or 60 Hz, single-phase network, into a system of three-phase voltages of variable frequencies and amplitudes.

The frequency converter can thus be used to control the speed of the motor.

This simultaneous action concerning frequency and voltage is carried out via two main elements:

- A diode rectifier

- A Pulse-Width Modulated (M.L.I.) inverter

The rectifier is a diode bridge.

The alternating voltage that crosses this diode bridge is converted into a «rectified» current.

At this stage, in order to improve the quality of the voltage at the rectifier outlet, a set of capacitances and induction coils eliminates the slight residual waviness that emerges from the rectifier. We thus obtain a smoothed direct voltage referred to as the "DC bus".

Following this change, the inverter will permanently regulate the voltage at the variable voltage regulator outlet in order to optimise the magnetisation of the motor. The fixed voltage at the inverter input is converted into variable voltage via transistors. This principle is called Pulse Width Modulation (MLI).

These transistors are controlled by the microcontroller, which may or may not activate them, thus allowing for the variation of frequency at the variable voltage regulator outlet.

The transistors (IGTB: Insulated Gate Bipolar Transistors) thus operate in switching mode and act as switches to convert direct voltage into variable voltage.

The frequency of activation or switching of the IGBTs allows for the creation of variable magnitudes of voltage and frequency. This frequency must be high in order to eliminate the noise generated by the magnetisation.

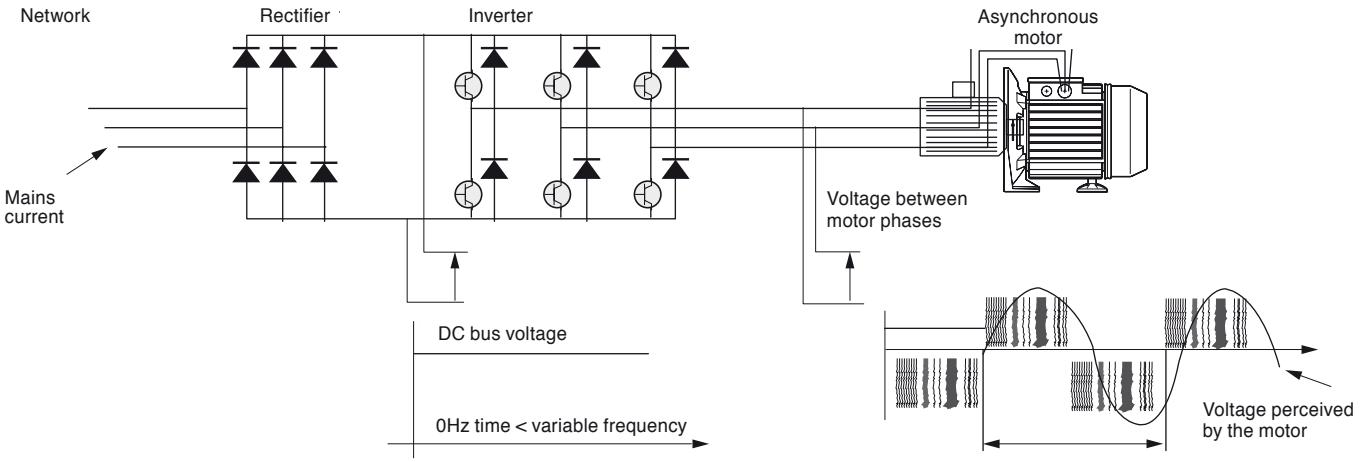

OPERATION IN MODES 1 AND 3: M13

OPERATING MODES:
3 operating modes are possible depending on the application and the requirements through a choice of 2 product references (M13 and M2).

Mode 1

Mode 1 :
The pump is installed like a MULTi-H standard pump, but its speed can be regulated manually, which allows it to operate over a range of flow rate/pressure curves.

Mode 1 and Mode 3: M13

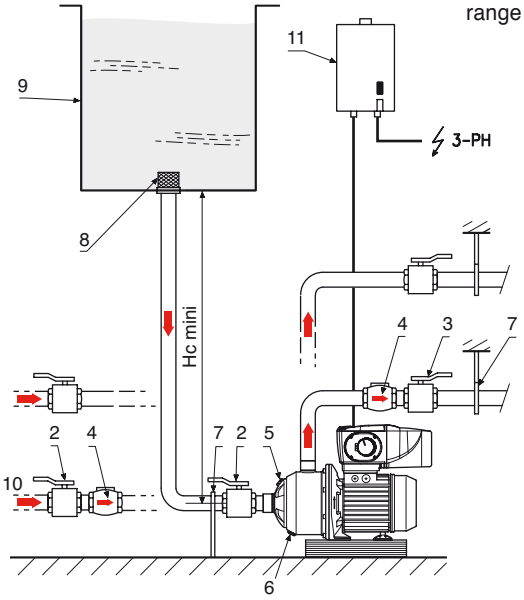

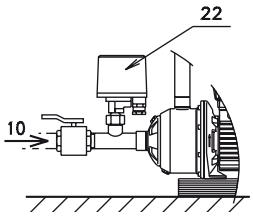

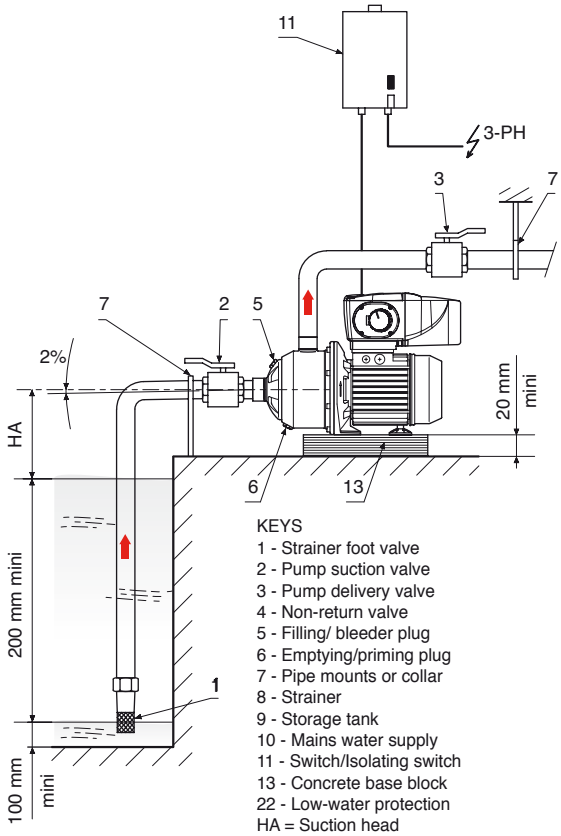

KEYS
1 - Strainer foot valve
2 - Pump suction valve
3 - Pump delivery valve
4 - Non-return valve
5 - Filling/ bleeder plug
6 - Emptying/priming plug
7 - Pipe mounts or collar
8 - Strainer
9 - Storage tank
10 - Mains water supply
11 - Switch/Isolating switch
13 - Concrete base block
22 - Low-water protection
HA = Suction head

Mode 3

Mode 3 :
The frequency is varied by an external control. The powering on, stoppage and rotation speed of the pump are controlled by a 0-10 V or 4-20 mA input signalw.

Mode 1 and Mode 3: M13

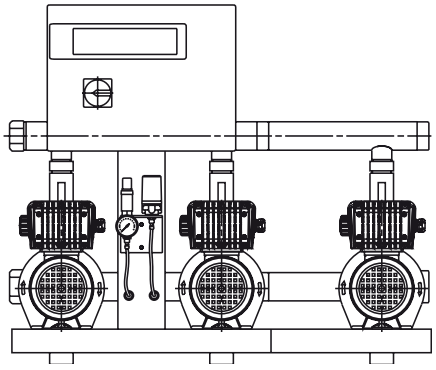

MULTI-HE SINGLE-PHASE

OPERATION IN MODE 2: M2

OPERATING MODES: 3 operating modes are possible depending on the application and the requirements, through a choice of 2 product references (M13 - see page 3 - and M2).

Mode 2

Pump mode alone for pressure regulation. The pump is installed with its pressure sensor which can be attached to the pump or to the delivery pipe. The set point pressure value is regulated when the module is installed using the potentiometer on the side.

Operation:
When the actual pressure, measured by the sensor, drops below the setpoint pressure, the pump starts up and regulates its speed in order to achieve the setpoint pressure. The pump stops automatically when it detects a zero flow rate and if it is equipped with a low-water protection system (optional).

Mode 2 : M2

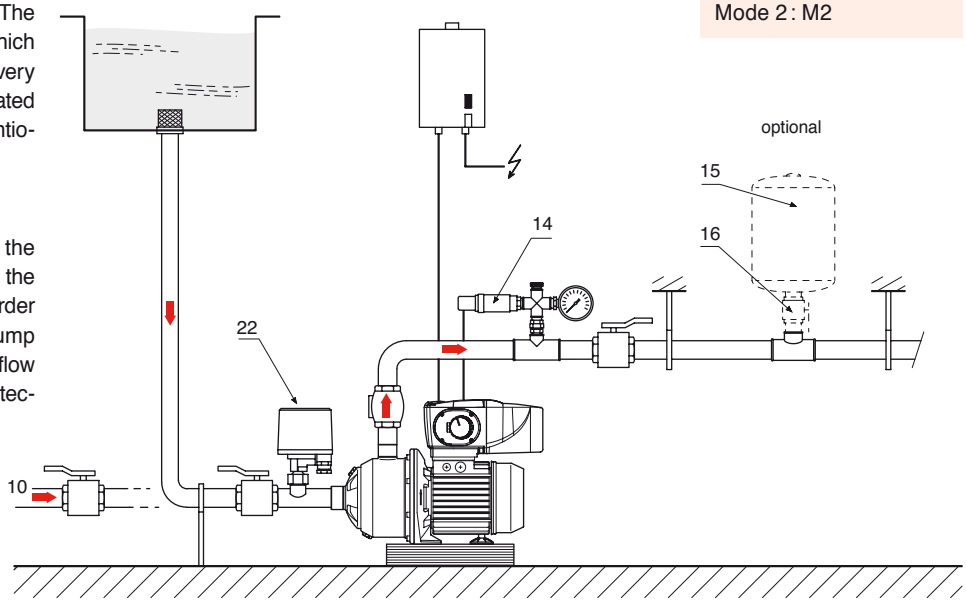

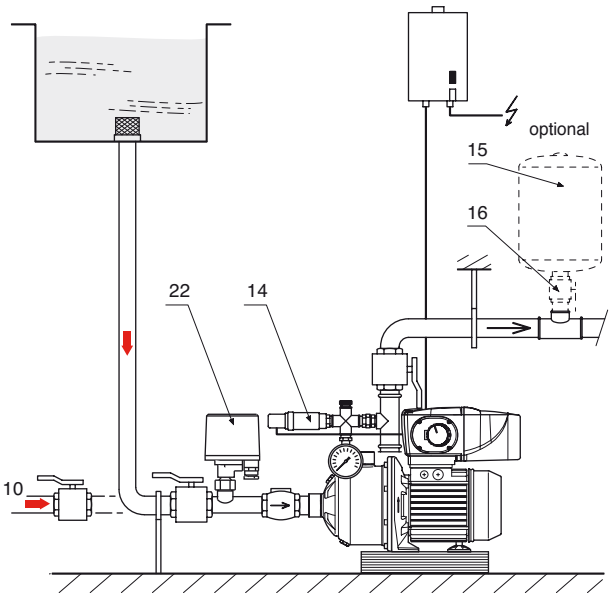

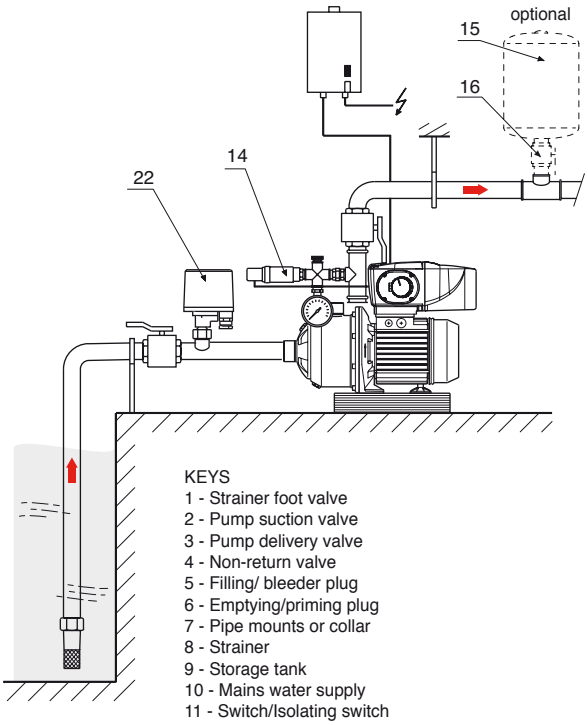

KEYS
1 - Strainer foot valve
2 - Pump suction valve
3 - Pump delivery valve
4 - Non-return valve
5 - Filling/ bleeder plug
6 - Emptying/priming plug
7 - Pipe mounts or collar
8 - Strainer
9 - Storage tank
10 - Mains water supply
11 - Switch/Isolating switch
13 - Concrete base block
14 - Pressure sensor kit
15 - Tank
16 - Tank shut-off valve
22 - Low-water protection

MANAGEMENT OF THE INTEGRATED EVS SYSTEM

• Display

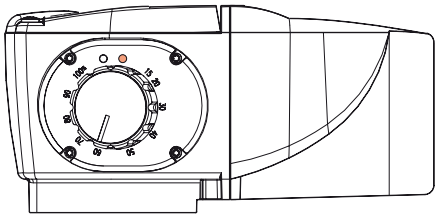

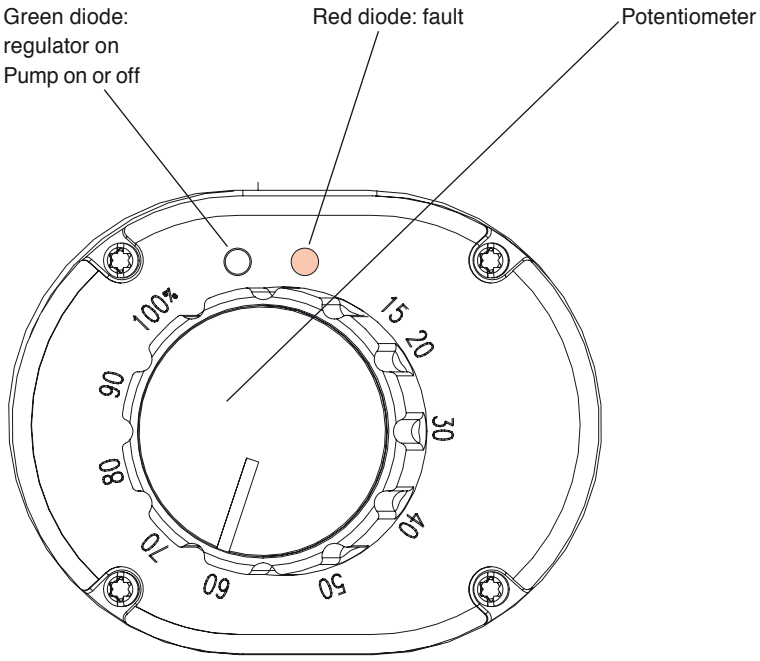

Maintenance diagnosis

The analysis is carried out according to parameters such as:

- Over/Undervoltage
- Sensor supply fault or severed cable
- Short-circuit
- Overload.

The pump fault is then signalled by the red diode

• Control laws in Mode 2

4-20 mA sensor

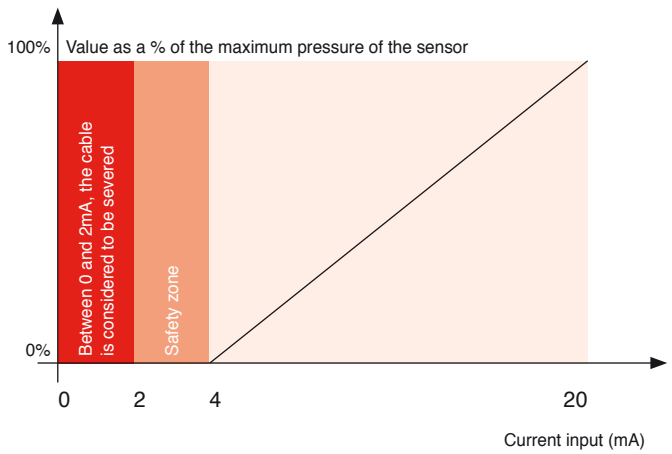

0-10 V sensor

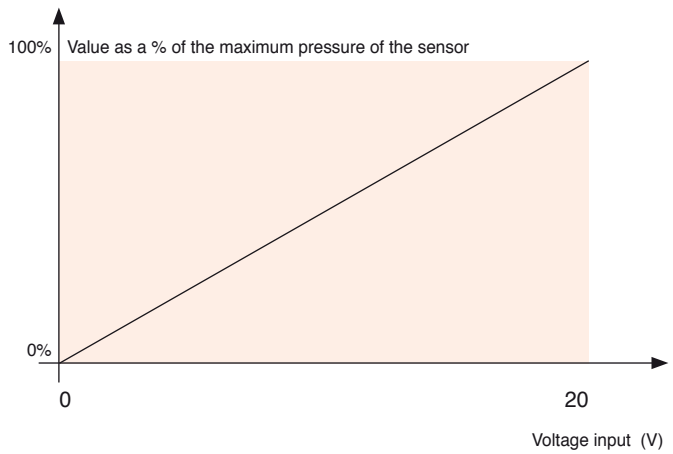

MULTI-HE SINGLE-PHASE

PUMP PERFORMANCE

PUMP PERFORMANCE CALCULATION TIPS
A pump is represented by a network of curves corresponding to different frequencies (Hz) and thus to different rotation speeds of the motor. The frequency is expressed as a %

An EVS pump is represented by a network of curves, with the understanding that all of the curves between 1 and 6 are covered.

With speed variation, the power consumption is adapted to the required Q/H, thus resulting in significant energy savings.

The NPSH of a MULTI-HE pump varies according to different curves. Therefore, it is important to know the desired setpoint pressure, especially for pump installations in suction mode in wells, and to take account of the NPSH of the pump at max. frequency, i.e. at 100%. The max. suction head for this type of pump must not exceed 1 metre.
Here, the benefit of speed variation is once again demonstrated in terms of efficiency, as there is optimal efficiency over a wide range of flow rates, compared to a fixed-speed pump.

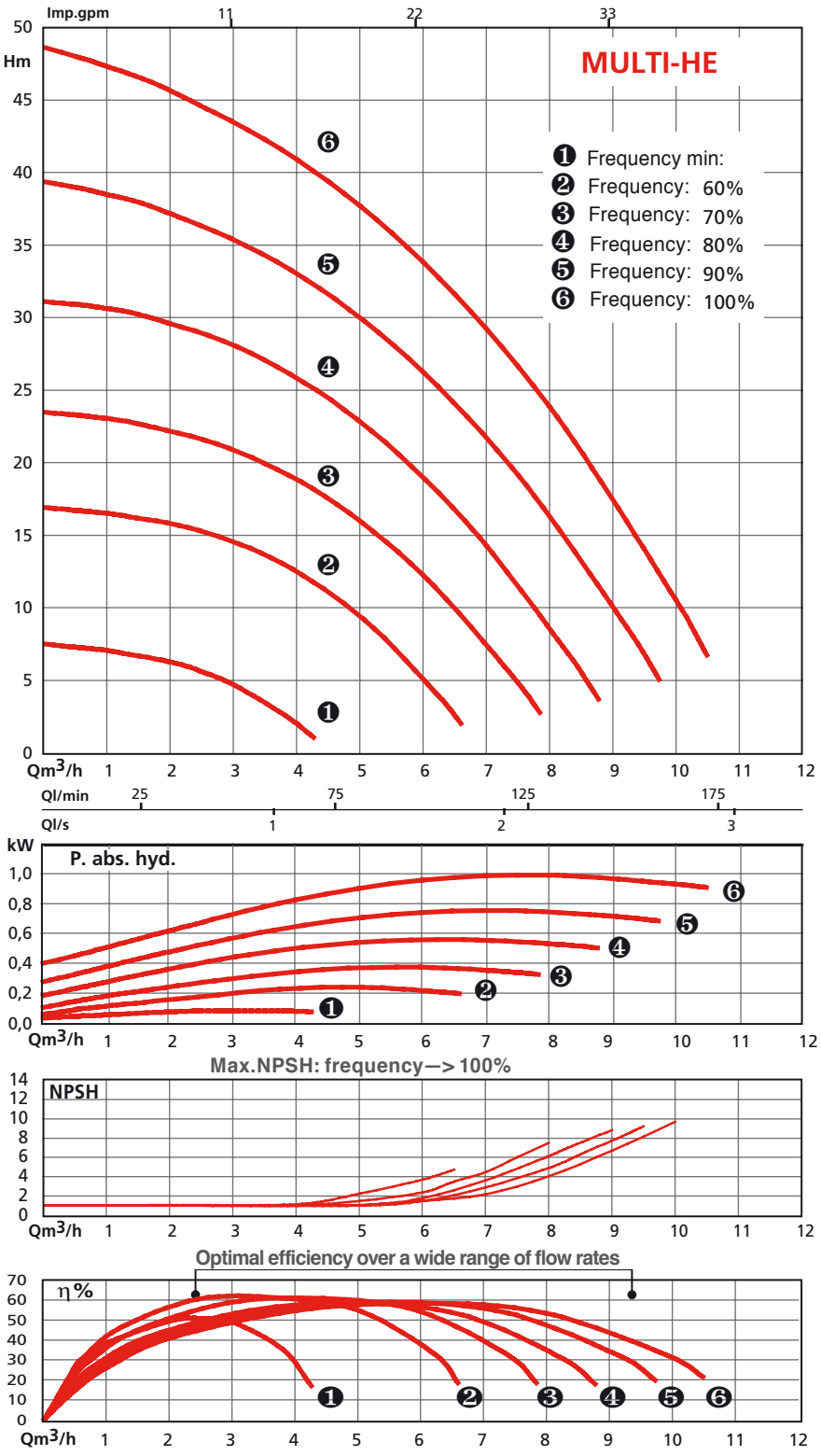

HYDRAULIC PERFORMANCE – SINGLE-PHASE MULTI-HE 205 AND 403

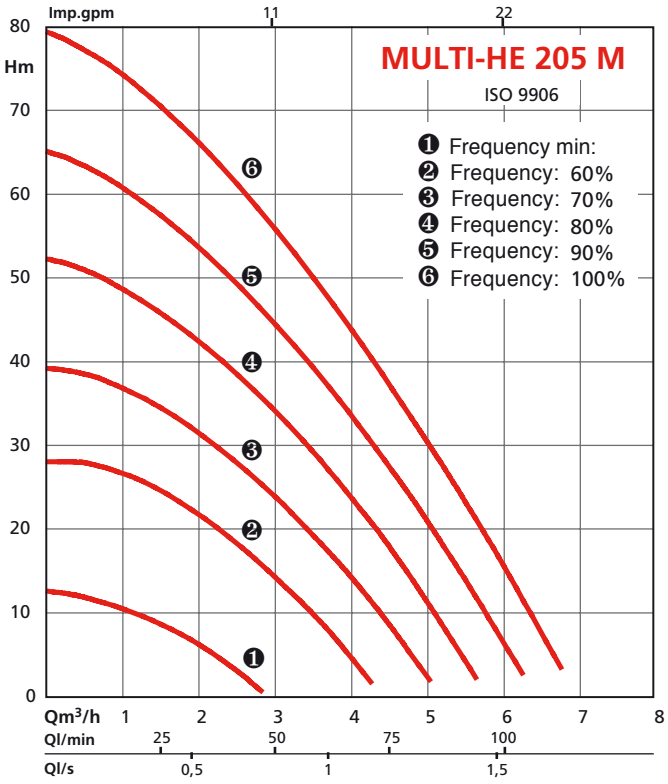

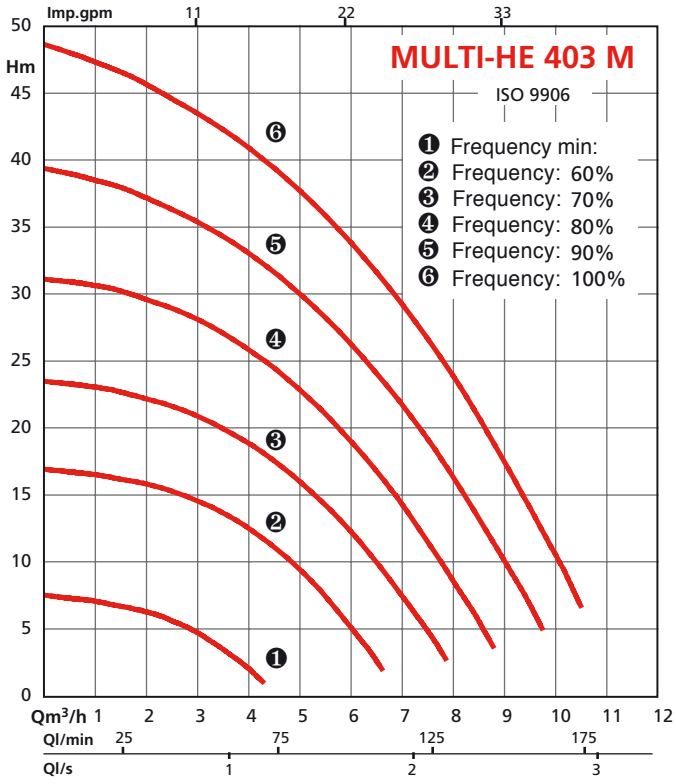

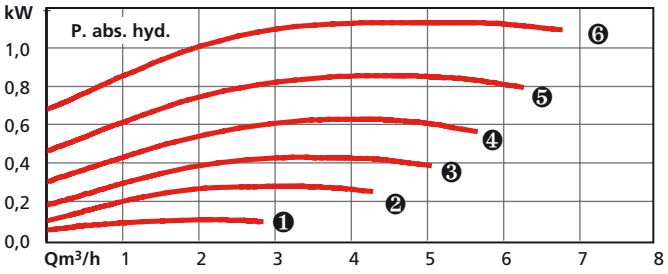

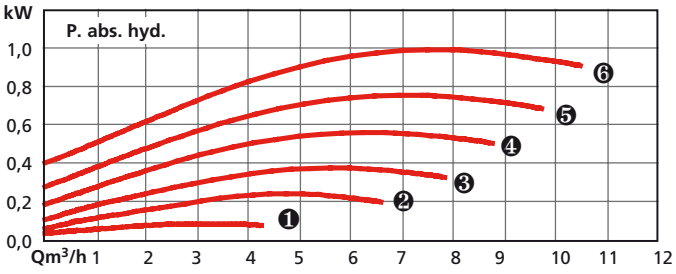

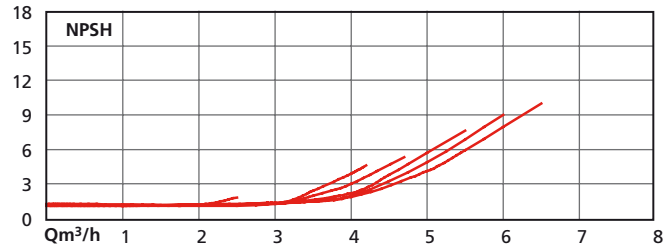

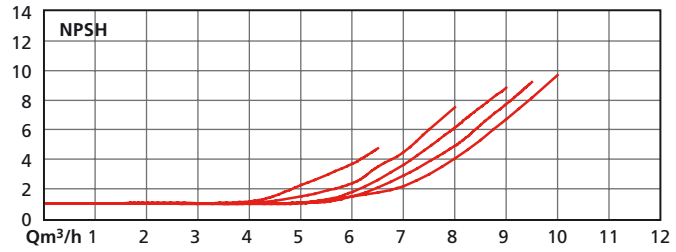

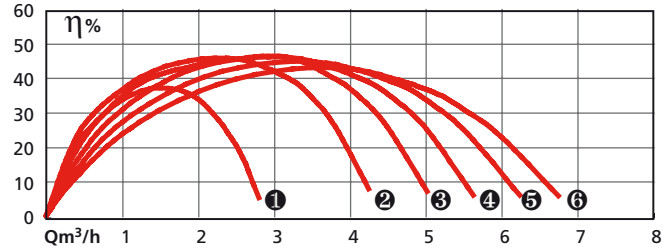

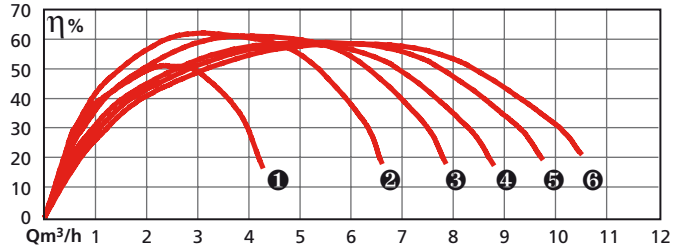

MULTI-HE SINGLE-PHASE

ELECTRICAL AND DIMENSIONAL SPECIFICATIONS - SINGLE-PHASE MULTI-HE

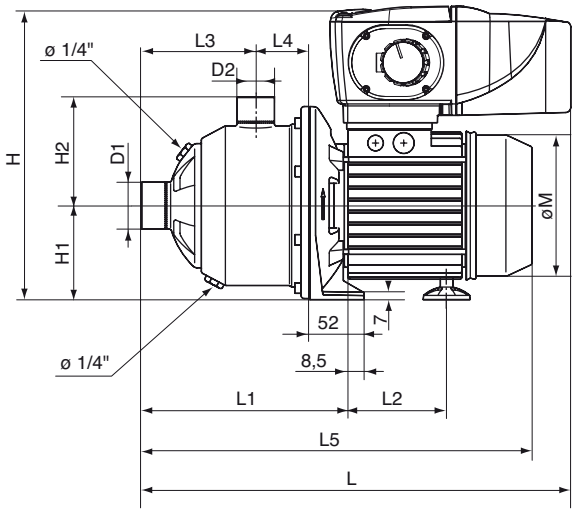

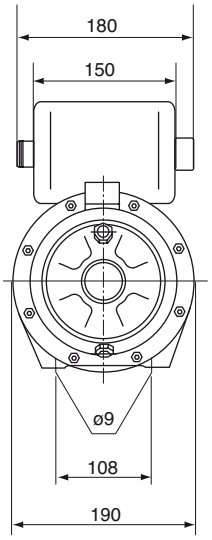

Order reference	Motor										Pump												Mass kg	
	P2	ƒ	T.	In.	ƒ	T.	In.	ƒ	T.	In.	L	L1	L2	L3	L4	L5	D1	D2	H	H1	H2	ØM		
	kW	Hz	V	A	Hz	V	A	Hz	V	A	mm	mm	mm	mm	mm	mm	mm	mm	mm	mm	mm	mm	without packaging	with packaging
MULTI-HE 205	1,1	50	230	10,5	60	220	10,8	60	240	10,1	460	252	103,5	158	51	448	1"	1"	275	90	104	155	16	18,2
MULTI-HE 403	1,1	50	230	10,5	60	220	10,8	60	240	10,1	460	204	103,5	110	51	400	1"1/4	1"	275	90	104	155	15	17,2

PRESSURE SENSOR KIT: MOUNTING ACCESSORY

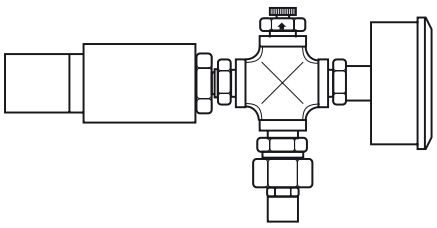

Sensor kit	6 bars	Order reference	Item reference
	MULTI-HE 403	CAPTPRESS 6B	4048063
Sensor kit	**10 bars**		
	MULTI-HE 206	CAPTPRESS 10B	4048064

RECOMMENDED ACCESSORIES

- Suction kit
- Shut-off valves
- Vibration-damping sleeves
- Bladder or galvanised tank
- Surge tank
- Non-return valves (with cone or flap,with spring if operating in Mode 2).
- Strainer foot valve.
- Low-water protection kit (Modes 1, 2 and 3).
- Regulating pressure sensor kit.

FEATURES

a) Electrical

All single-phase types:
- 230 V ± 10% /50 Hz
- 220 V ± 6% /60 Hz
- 240 V ± 6% /60 Hz

b) Fitting

- Installation in an easily accessible place, in suction or flooded suction mode.
- Installation on a solid base or directly on a smooth and level floor.
- Pump attached by ø m8 pins through two holes.
- Connection to system via a flexible hose with reinforcing coil, or a rigid pipe.
- The installation must allow for the protection of the pump against adverse weather conditions and frost (avoid direct exposure to rain or sun).

c) Packaging

Pump delivered in cardboard packaging, without connection accessories.

OPERATING RANGES

Flow rates of up to:	34 m³/h
Manometric heads of up to:	96 m CL
Max. delivery pressure:	10 bar
Max. intake pressure:	6 bar
Temperature range:	- 15° to +110°C*
Max. ambient temperature:	+ 50°C
DN (nominal diameter) of ports:	1" to 2"

* according to mechanical seal and gasket

MULTI-HE

HORIZONTAL STAINLESS STEEL MULTI-STAGE PUMPS with integrated E.V.S.* 50/60 Hz 2 ranges: 304 stainless steel and 316L stainless steel

* Electronic Variation Speed

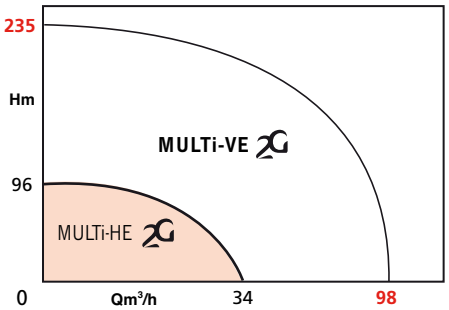

APPLICATIONS

Pumping of clean, non-muddy liquids in the housing, agricultural and industrial sectors.

- Supply - Boosting
- Watering - Irrigation
- High-pressure washing
- Heating - Air conditioning
- Water treatment.

Incorporation into modular pressure-boosting systems designed for:

- Hotels
- Hospitals

Pumped fluids:

- **304 S.steel range**: clear and non-corrosive liquids (drinking water, glycol water)
- **316L S.steel range**: corrosive liquids (demineralised seawater, chlorinated water …).

Certified ACS

EVS

ADVANTAGES

- **Fewer mechanical and electrical constraints compared to a standard pump :**
- **No more consecutive starting and stopping**
- **Flexibility of use, with smoother operation and less water hammer,**
- **Reduced starter current,**
- **Adjustment to the installation via the precise setting of speed and pressure.**

- **Automatic diagnoses for easier maintenance.**
- **Quieter operation due to the adaptation of pump speed to the requirements.**
- **User-friendly installation and use due to easy installation and operation.**
- **Economic**
- **Optimisation of the complete pump + IE2 motor + converter product, guaranteeing energy savings.**
- **A single pump covers a complete range of standard pumps.**
- **A single point of contact and a single supplier for a complete automatic system.**
- **More compact booster pump due to the frequency converter being built into the pump.**



• MULTi-HE 403

MULTI-HE

DESIGN

• Hydraulic part

- All stainless steel.
- Multi-stage: 2 to 6 stages.
- Centrifugal with horizontal axis.
- Tapped suction/delivery ports.
- Axial intake and radial, upward delivery.
- Standardised mechanical seal ensures leak-tightness of shaft passage.

• Motor

- Dry IE2 motor, 2 poles, equipped with E.V.S.

Winding: 380 to 440 V three-phase ± 6%
Frequency: 50 and 60 Hz
Insulation class: 155 (F)
Protection class: IP54

IDENTIFICATION

MULTi-HE 402N - SE - T/2

Pump family

Nominal flow rate (m3/h)
(at 50 Hz / 2 poles)

Number of stages

IE2 motor

S = 304 / X = 316L S. steel

O-rings
E = EPDM
V = VITON

Nothing = non-motorised
M13 = Single-phase Mode 1-3
M2 = Single-phase Mode 2
T = Three-phase

2 = 2 poles

BASIC CONSTRUCTION

Range	**304 stainless steel**	**316L stainless steel**
	2/4/8/16	**2/4/8**
Main parts		**Material**
	non-corrosive liquids	corrosive liquids
Suction-delivery housing	304 Stainless steel	316 L Stainless steel
Impellers	304 Stainless steel	316 L Stainless steel
Cells (stage housing)	304 Stainless steel	316 L Stainless steel
Pump shaft	316 L Stainless steel	316 L Stainless steel
Mechanical seal	Silicone carbide Carbon	W Carbide CCarbon
O-rings	EPDM*	Viton**
Plugs	316 L Stainless steel	316 L Stainless steel

* T° 110°C — **T°90°C

NB: 304 1.4301(X5Cr Ni18-10) or 316 L 1.4404(X2Cr Ni Mo17.12.2) stainless steel - recommended materials offering excellent corrosion resistance. Clean and clear liquids with no fibres and low sand/silica content (max. concentration 40g/m3).

ELECTRIC SPEED VARIATION

Description

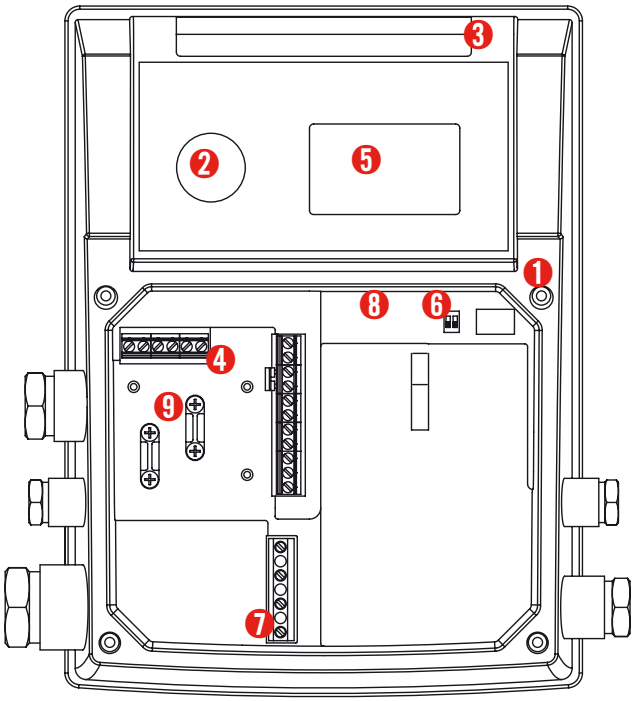

1. Cover attachment
2. Control button
3. Infra-red communication window
4. Control connectors
5. Display
6. Switches
7. Power terminal block
8. IF module interface
9. SBM unavailability transmission and SSM fault transmission relays

Features

Automatic modes
- Manually or externally controlled speed.
- Constant pressure.
- PDI control.

Manual settings
- Constant pressure setpoint setting.
- Rotation speed setting (speed mode).
- Operating mode setting.
- On/off pump setting
- Configuration of all operating parameters.
- Fault clearance.

Safety
- Full motor protection with integrated electronic tripping device.
- Access locking .

Communication

External control functions
- «Priority Off» control input.
- 0-10 V, 0–20 mA analog input for setting mode (DDC) and remote setting of the set-point value.
- 2-10 V, 4–20 mA analog input for setting mode (DDC) and remote setting of the set-point value.
- 0–10 V analog input for the actual value signal of the pressure sensor .
- 2–10 V, 0-20 mA and 4–20 mA analog input for the actual value signal of the pressure sensor.

Signalling and display
- Centralised SSM fault transmission.
- Centralised SBM operation transmission.

Data exchange
- Location for Salmson IF modules (Modbus, BACnet, CAN, PLR, LON) for connection to centralised technical management system.

MULTI-HE

OPERATION

• «Speed control» mode

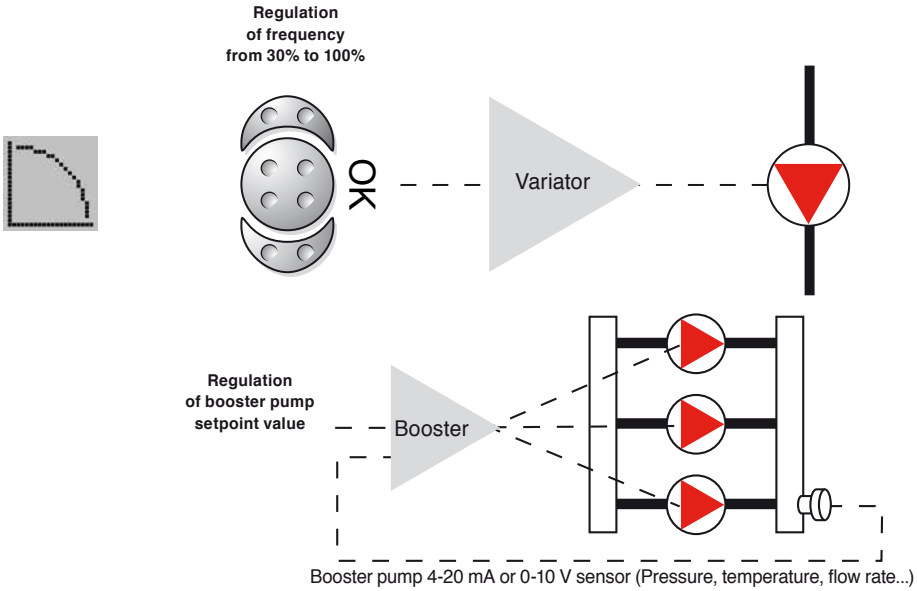

• Display
- speed shown on-screen

• On/Off
- remotely
- with button

• «Constant pressure» mode

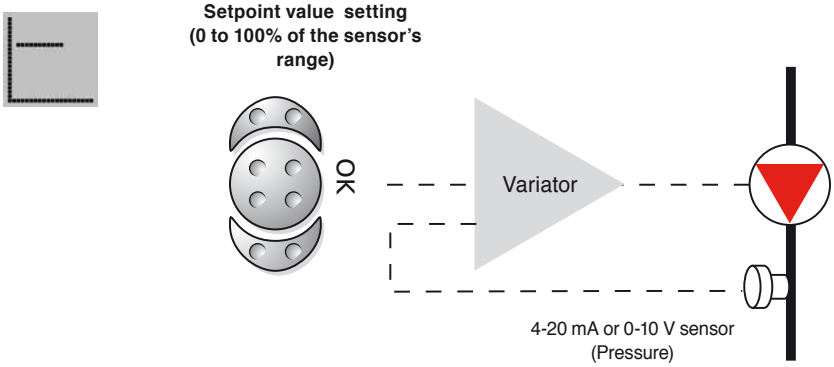

• Display
- Display of pressure
  in pressure setting

• On/Off
- remotely
- with button

• Pressure adjustment
- Pressure adjustment using buttons
  OR
- Pressure adjustment via an external signal

• «P.I.D Control» mode

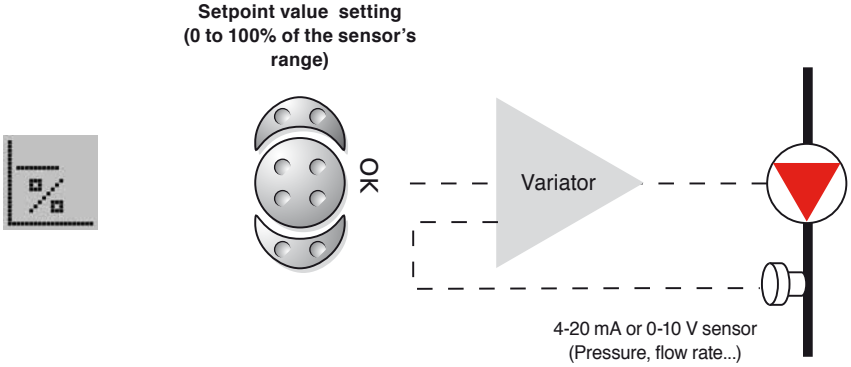

• Display
- % display for the other types of regulation

• On/Off
- remotely
- with button

• Other types of regulation
- Possible to adjust the PDI corrector
- choice of type of regulation
  (flow rate, temperature,...)

HYDRAULIC PERFORMANCE - PRESELECTION CALCULATION CHART

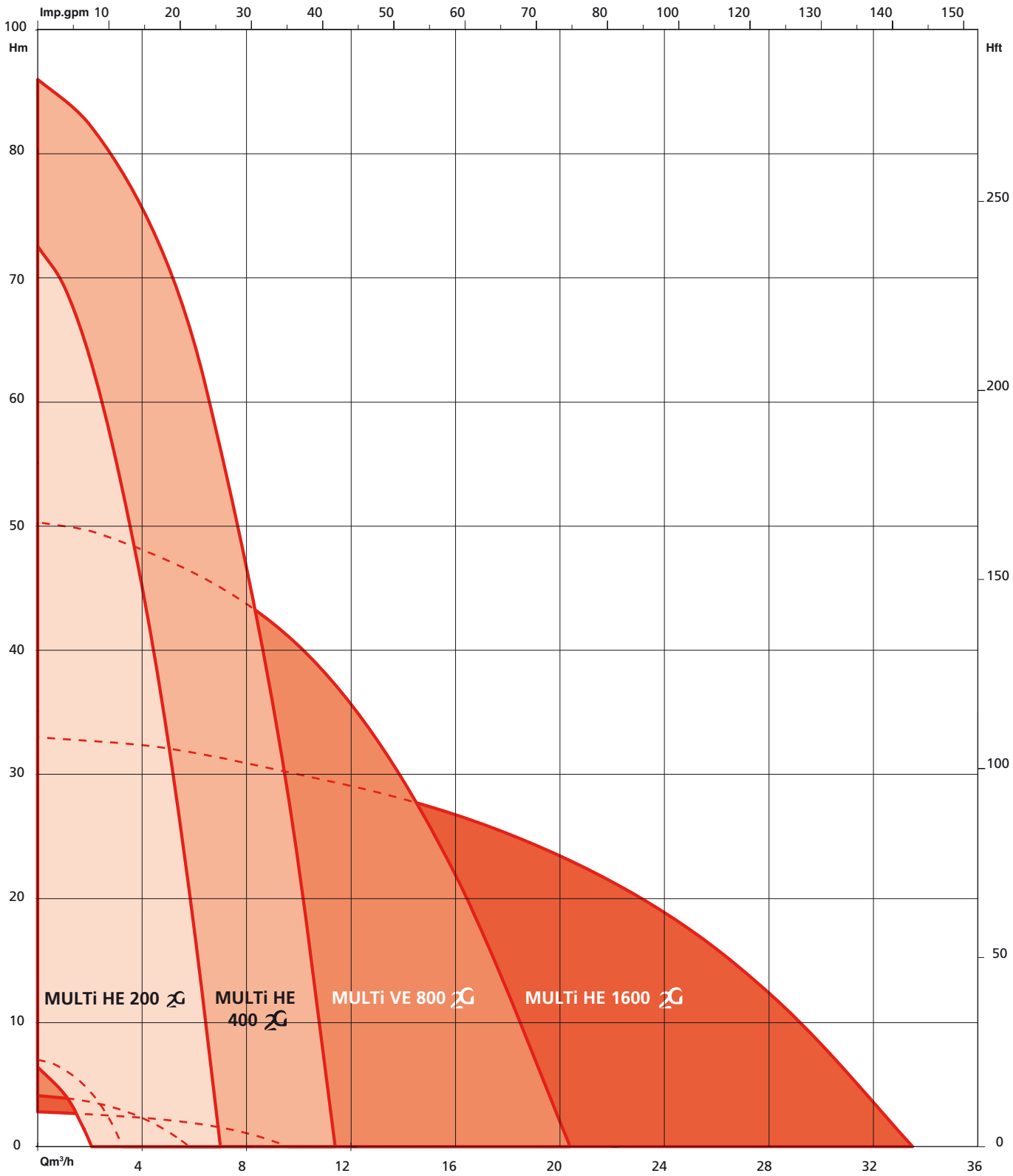

MULTI-HE

HYDRAULIC PERFORMANCE - 200 SERIE

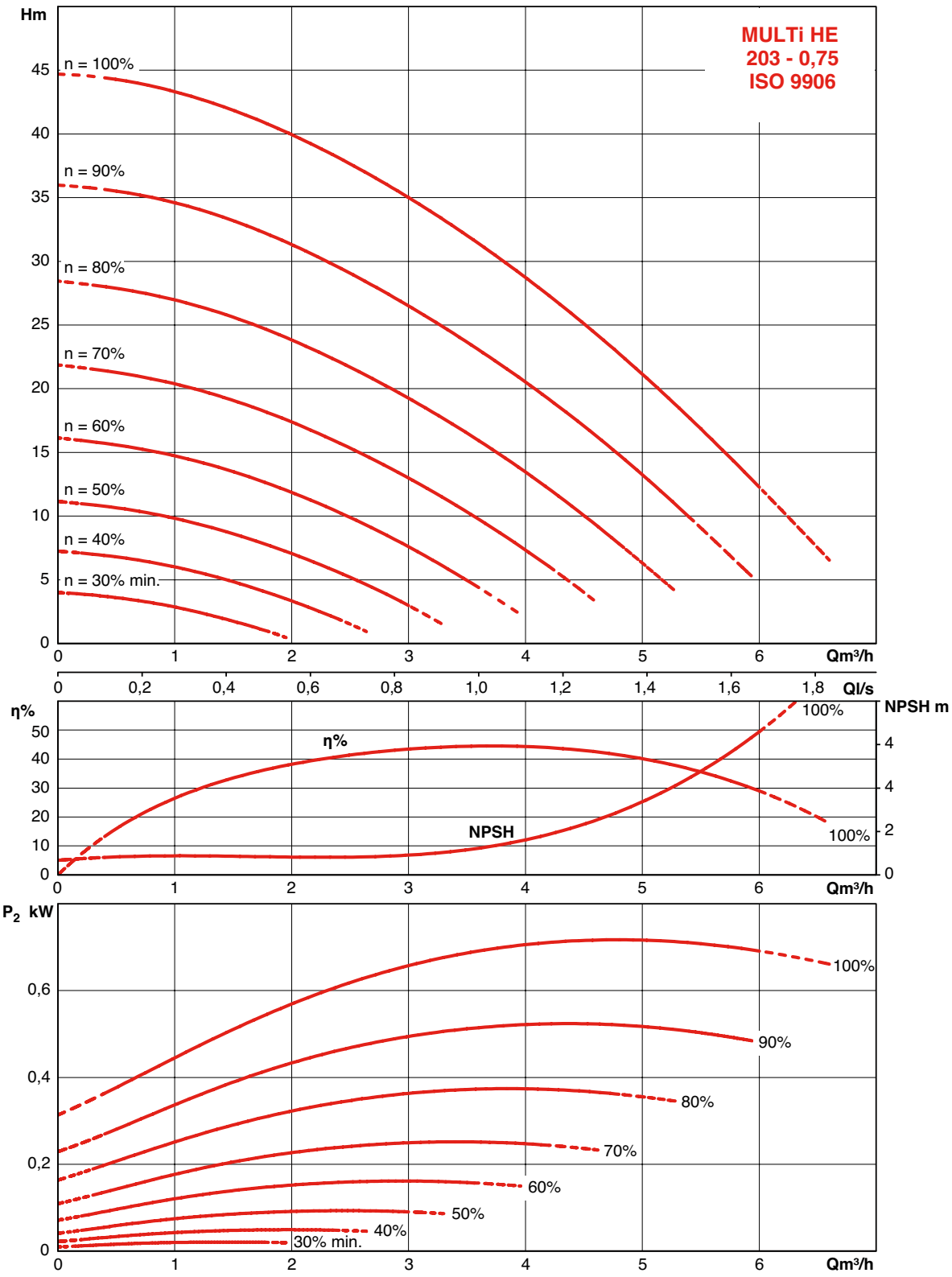

HYDRAULIC PERFORMANCE - 200 SERIE

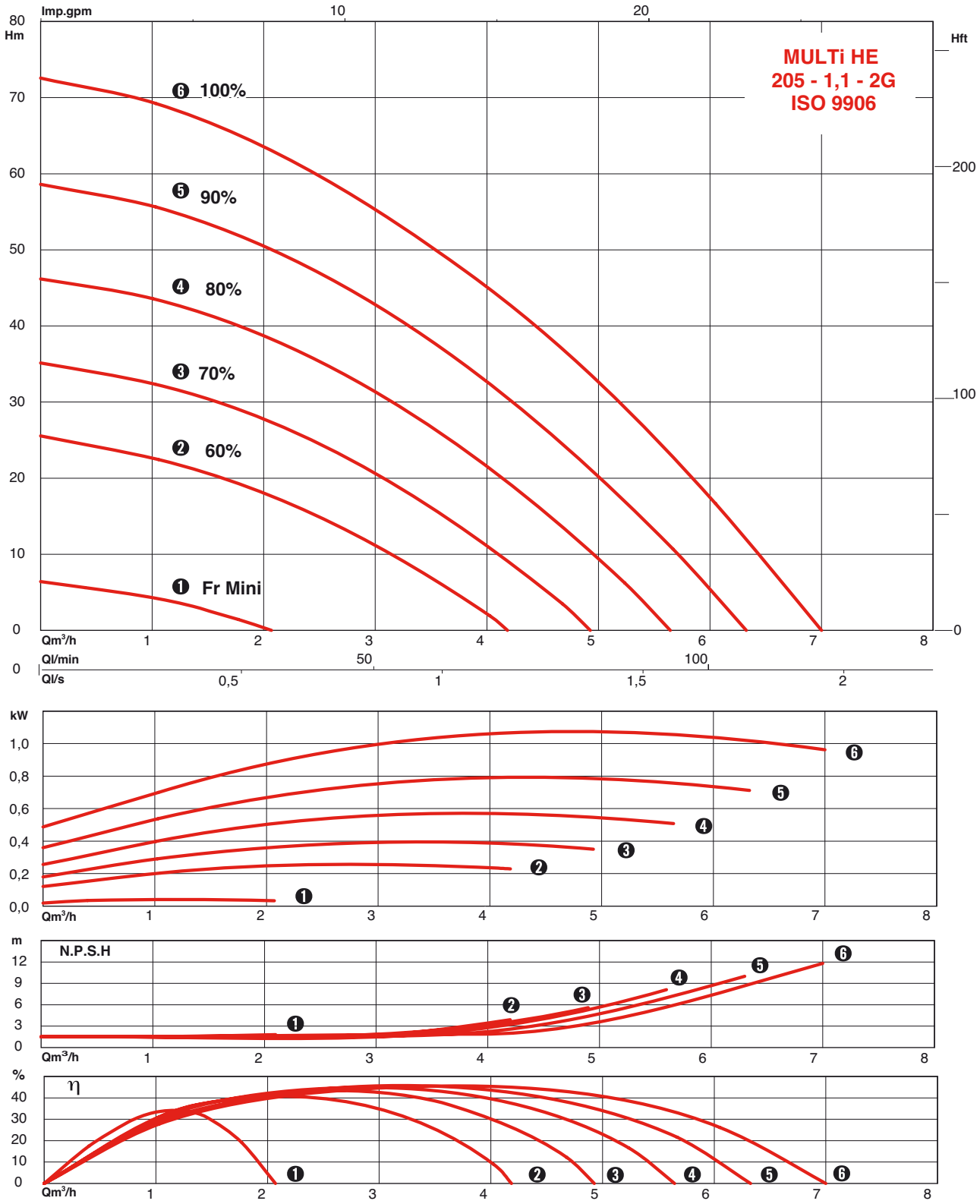

MULTI-HE

HYDRAULIC PERFORMANCE - 200 SERIE

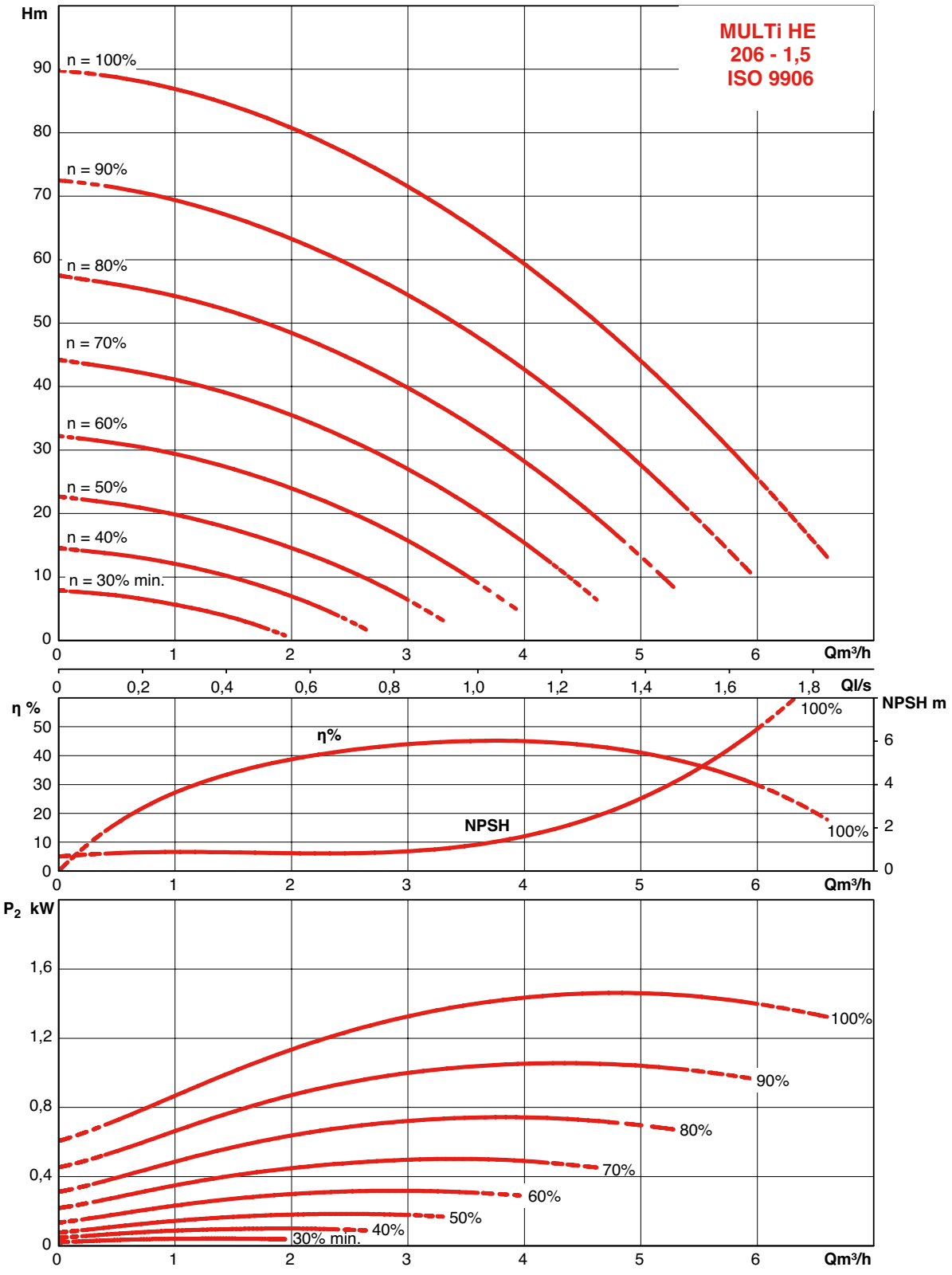

HYDRAULIC PERFORMANCE - 400 SERIE

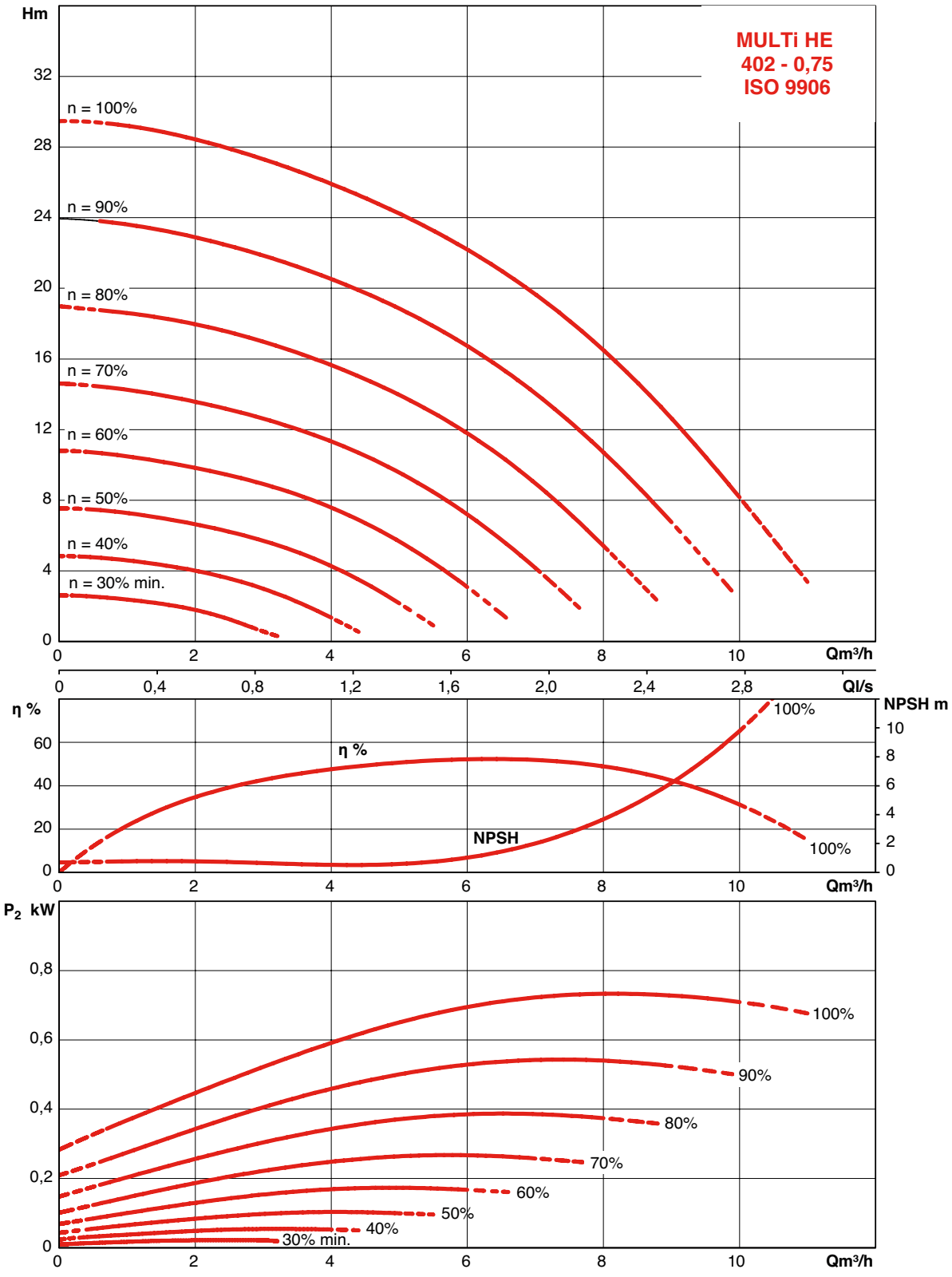

MULTI-HE

HYDRAULIC PERFORMANCE - 400 SERIE

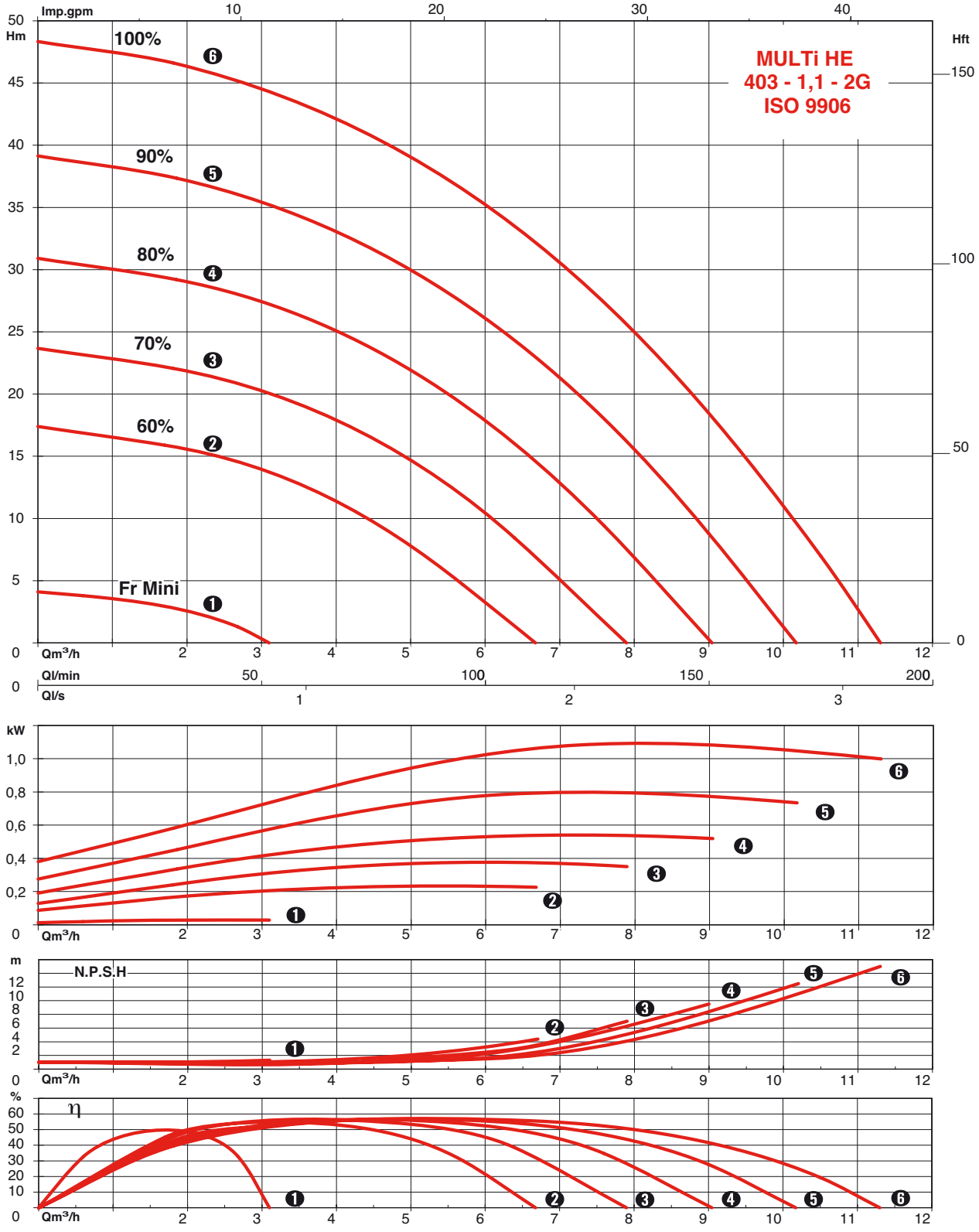

HYDRAULIC PERFORMANCE - 400 SERIE

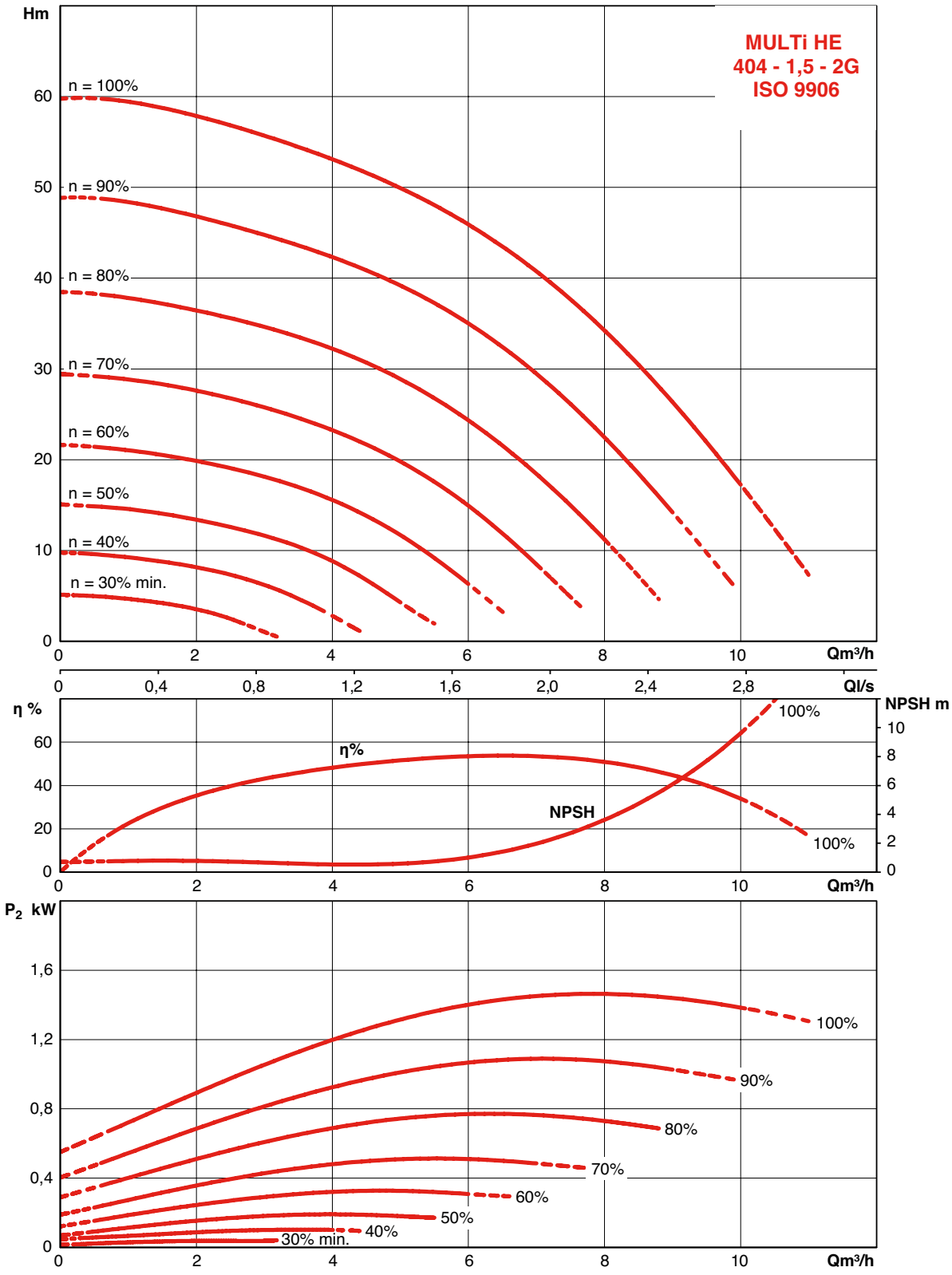

MULTI-HE

HYDRAULIC PERFORMANCE - 400 SERIE

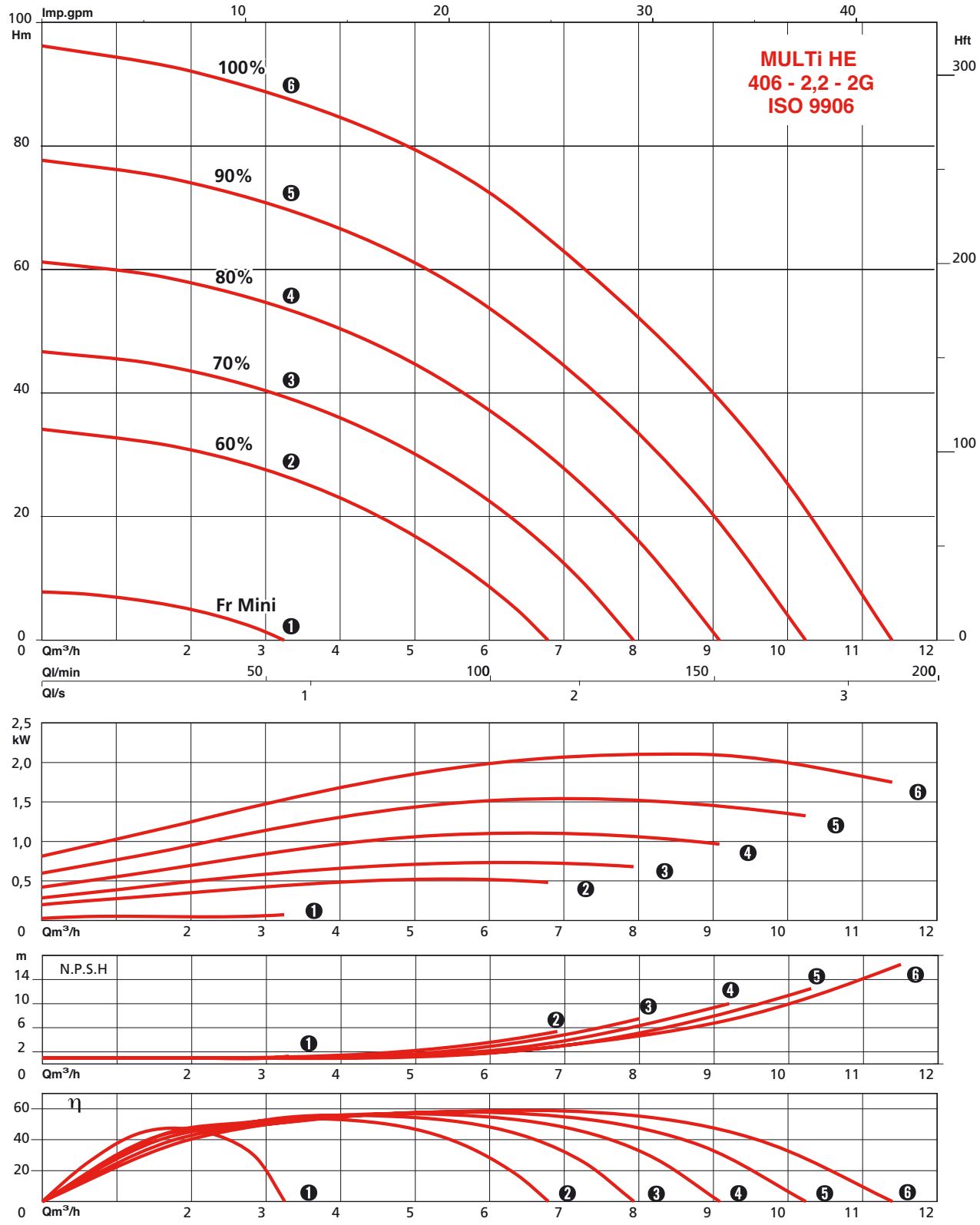

HYDRAULIC PERFORMANCE - 800 SERIE

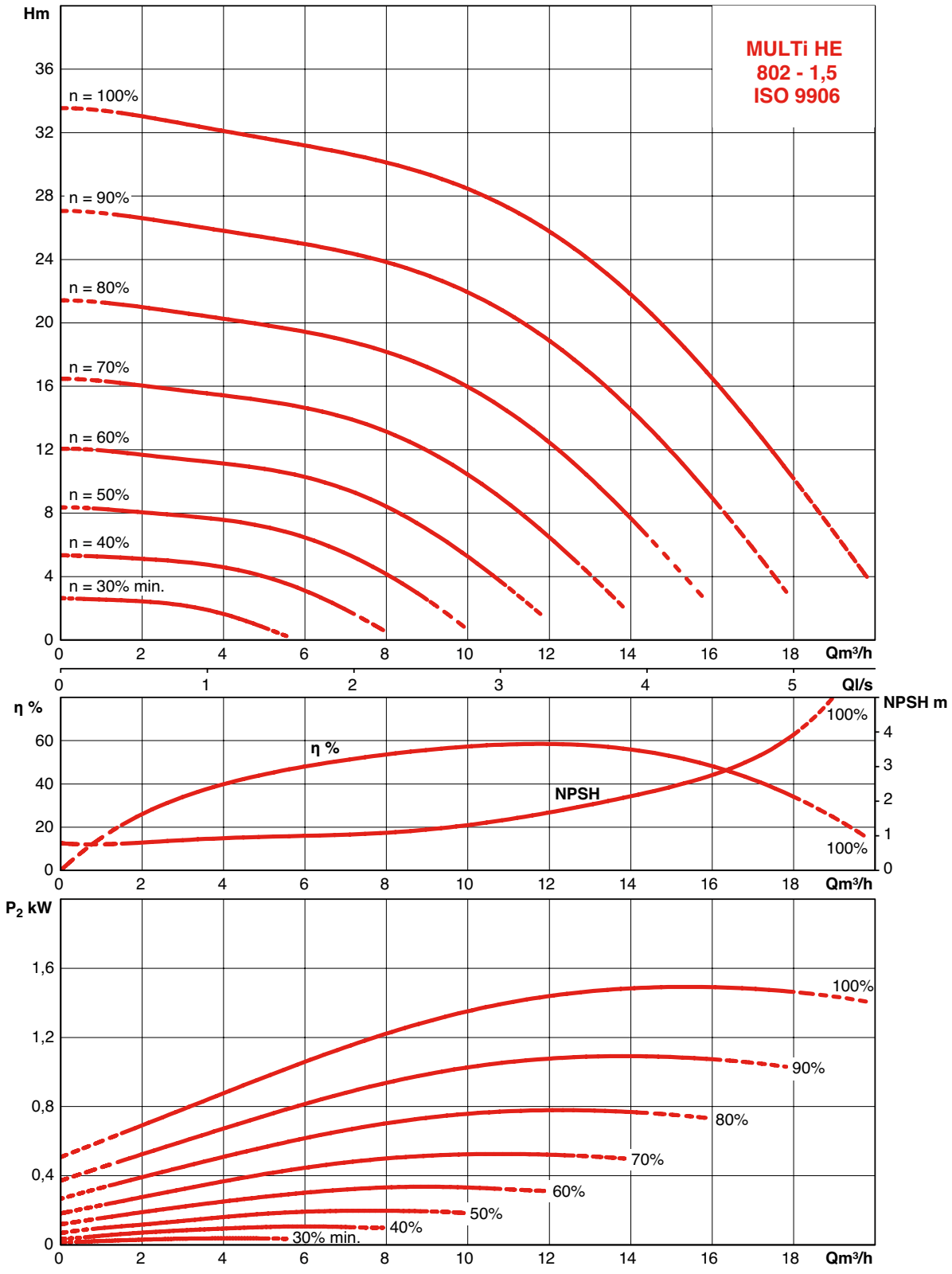

MULTI-HE

HYDRAULIC PERFORMANCE - 800 SERIE

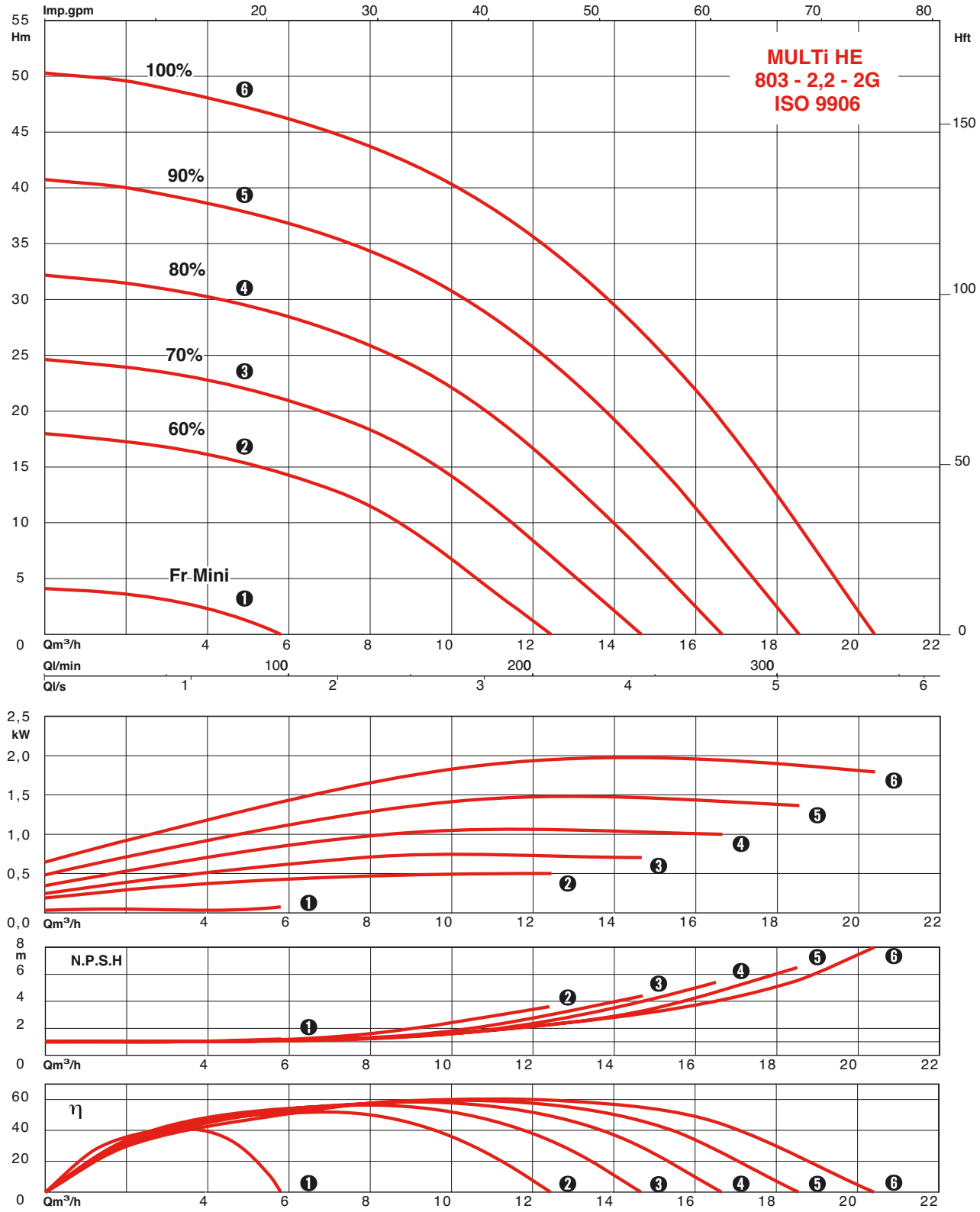

HYDRAULIC PERFORMANCE - 1600 SERIE

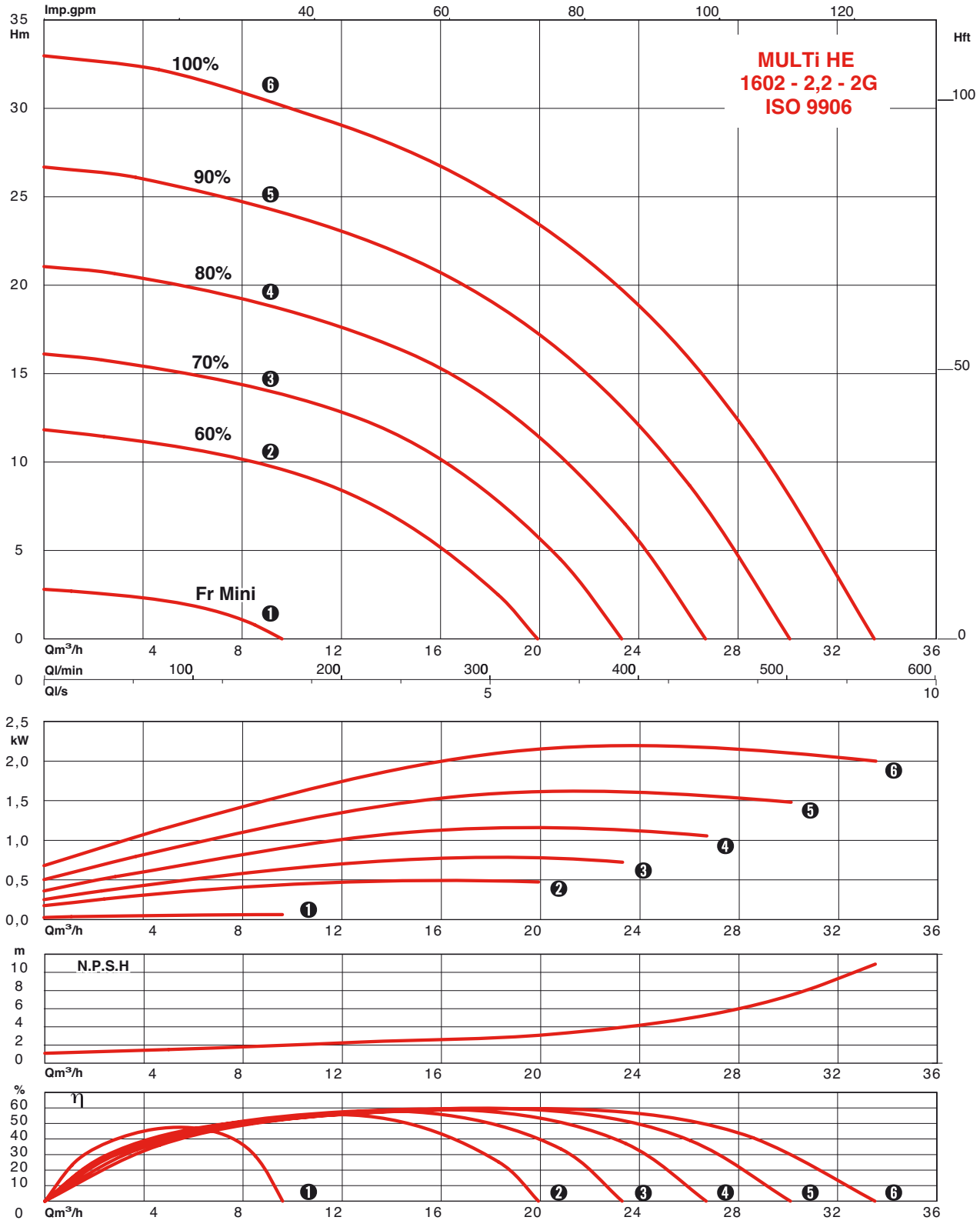

MULTI-HE

ELECTRICAL AND DIMENSIONAL SPECIFICATIONS

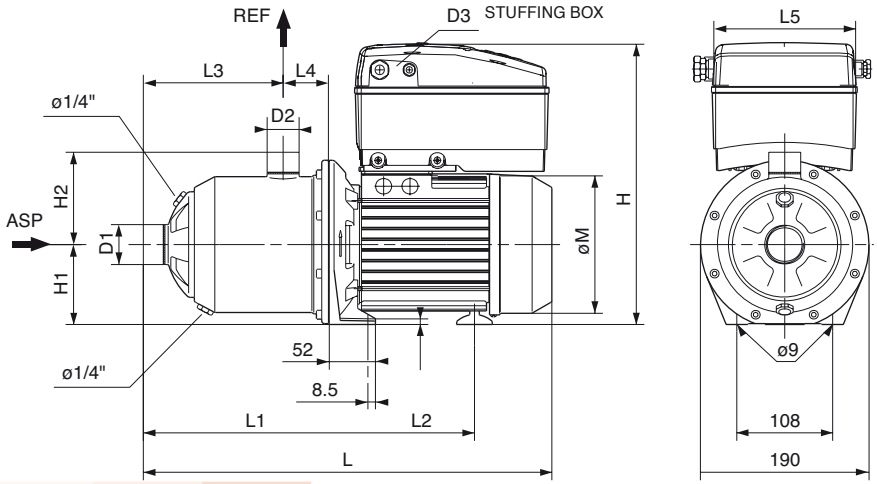

Order Reference	P2	I Plate	I Plate	I Plate	L	L1	L2	L3	L4	L5	D1	D2	H	H1	H2	ØM	Mass Kg	
		400V-50Hz	380V-60Hz	440V-60Hz													without	with
	kW	A	A	A	mm	mm	mm	mm	mm	mm	tapped	tapped	mm	mm	mm	mm	packaging	
MULTI-HE 203N	0,75	3,2	3,4	3,1	409	204	110	109,5	51	158	1"	1"	321	90	104	146	16	18,2
MULTI-HE 205N	1,1	4	3,2	2,9	457	253	110	158	51	158	1"	1"	322	90	104	146	16,6	18,8
MULTI-HE 206N	1,5	5,6	5,8	5,4	523	276	148	181,5	51	182	1"	1"	341	90	104	171,6	23,3	25,5
MULTI-HE 402N	0,75	3,2	3,4	3,1	409	204	110	109,5	51	158	1"	1"	321	90	104	146	16	18,2
MULTI-HE 403N	1,1	4,1	2,9	2,7	457	205	110	110	51	158	1"1/4	1"	322	90	104	146	16,6	18,8
MULTI-HE 404N	1,5	5,6	5,8	5,4	499	252	148	157,5	51	182	1¼"	1"	341	90	104	171,6	21,6	23,8
MULTI-HE 406N	2,2	6,6	5,3	4,7	523	277	148	182	51	182	1"1/4	1"	341	90	104	172	24,4	26,6
MULTI-HE 802N	1,5	5,6	5,8	5,4	463	216	148	121,5	51	182	1½"	1¼"	341	90	104	171,6	20,9	23,1
MULTI-HE 803N	2,2	6	4,6	4,1	463	217	148	122	52	182	1"1/2	1"1/4	341	90	104	172	23,2	25,4
MULTI-HE 1602N	2,2	6,2	5,4	4,8	482	236	148	138	55	182	2"	1"1/2	341	90	105	172	25,3	27,5

ACCESSORIES

- Suction kit.
- Shut-off valves.
- Vibration-damping sleeves.
- Bladder or galvanised tank.
- Surge tank.
- Non-return valves (with cone or flap, with spring if operating in «Constant pressure» mode).
- Strainer foot valve.
- Low-water protection («Speed control» mode).
- Regulating pressure sensor kit.

SENSOR KIT: FITTING ACCESSORY

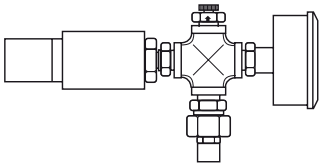

Sensor kit	Model	Order reference	Item reference
6 bar	MULTI-HE 403	captpress 6b	4048063
	MULTI-HE 1602		
10 bar	MULTI-HE 205	captpress 10b	4048064
	MULTI-HE 803		
	MULTI-HE 406		

FEATURES

a) Electrical

- 380 V / 440V - 50/ 60 Hz three-phase, tolerance ± 6%, 2 poles.

b) Fitting

- Installation in an easily accessible place, in suction or flooded suction mode.
- Installation on a solid base or directly on a smooth and level floor.
- Pump attached by ø m8 pins through two holes.

Connection to system via a flexible hose with reinforcing coil, or a rigid pipe.

- The installation must allow for the protection of the pump against adverse weather conditions and frost (avoid direct exposure to rain or sun).

c) Packaging

- Pump delivered in cardboard packaging, without connection fittings.

OPERATING LIMITS

Flow rates up to:	**20 m³/h**
Head up to:	**96 mCE**
Max. discharge pressure:	**10 bar**
Max. water temperature:	**+ 50°C**
Max. ambient temperature:	**+ 50°C**

HYDROMINI MULTI-HE

BOOSTERS

Domestic and small-scale collective uses with integrated EVS* 50/60 Hz

***Electronic Variation Speed**

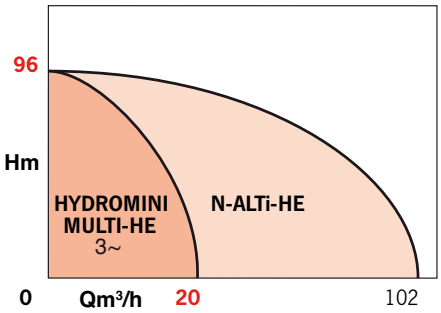

APPLICATIONS

Pressure boosting in a distribution network where there is too low or none pressure, for:

- Water supply and distribution from a town network or a storage tank.
- Irrigation
- Sprinkling

For detached houses, hotels, hospitals, …

ADVANTAGES

- **Boosters entirely assembled, wired and preset, ready to use.**
- **Easy installation: an electrical connection and two hydraulic connections.**
- **Automatic operation, discharge pressure regulation.**
- **Tank with interchangeable bladder.**
- **Energy saving and sound levels reduction by adapting pump speed to requirements.**
- **Flexible use, reduction of hammering and knocking.**

Certified ACS

EVS



• MULTi-HE-205-T-V8-2G

HYDROMINI MULTI-HE

CONCEPTION

Pre-assembled automatic boosters, ready to be installed.

• Hydraulic part

- Centrifugal with vertical axis, no self-priming.
- Multi-stage with 3 to 6 stages.
- Impellers mounted directly on the motor shaft extension.
- Standardized mechanical seal.

• Motor

- Motor thermal protection included with automatic reset.
- Dry motor, 2 pole, equipped with EVS.

Rotation speed :	Variable
Winding :	3~ 380 to 440V ± 6%
Frequency :	50 and 60 Hz
Insulating category :	155 (F)
Protection index :	IP 54

OPERATION

On the pump, three models can be chosen. From the factory, the pump is set in mode 2 (automatic).
But modes 1 (Manual) and 3 (External control 0 - 10V or 4 - 20mA) can also be selected if necessary.

Mode 2 / Automatic pump boost system

Pump alone using pressure regulation. The pump is installed with its pressure sensor which can attached either on the discharge pipe. The set point pressure is adjusted when the pump is installed by means of the front-mounted touch pad.

Operation

When the real pressure measured on the sensor drops below the set pressure, the pump starts and controls its speed to achieve the set pressure. The pump stops automatically when it detects zero flow or dry-running.

STANDARD CONSTRUCTION

Main parts	Material
Pumps MULTI-HE 200-400-800	Stainless steel 304
Base plate	Steel (with corrosion proof coating)
Ball valve	Brass
Non-return valve	Brass

IDENTIFICATION

MULTI-HE 2 05-T-V8 - 2G

- Pump code
- Nominal flow in m³/h
- Number of stages
- T = 3-phase
- Vessel size in litre
- 2nd generation

BOOSTER DESCRIPTION

1. 3-phase MULTI-HE (205, 403, 406, 803)
2. Sensor kit 16 bar
3. Base plate (with anti-vibrations sleeves)
4. Vessel with interchangeable bladders 8 L, 16 b
5. Non-return valve
6. Pressure gauge
7. Isolating valve in discharge
8. Anti-vibration sleeves*
9. Power switch*
10. Dry running protection for town network* or storage tank*

*option

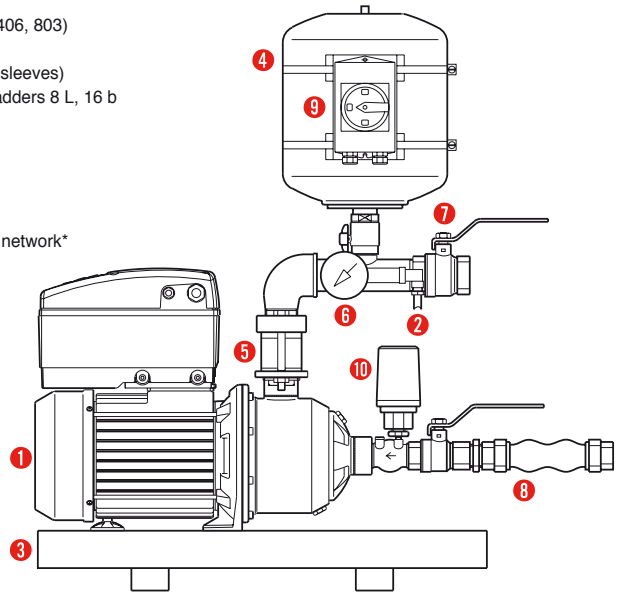

INSTALLATION

Water supply on storage tank or on town network.

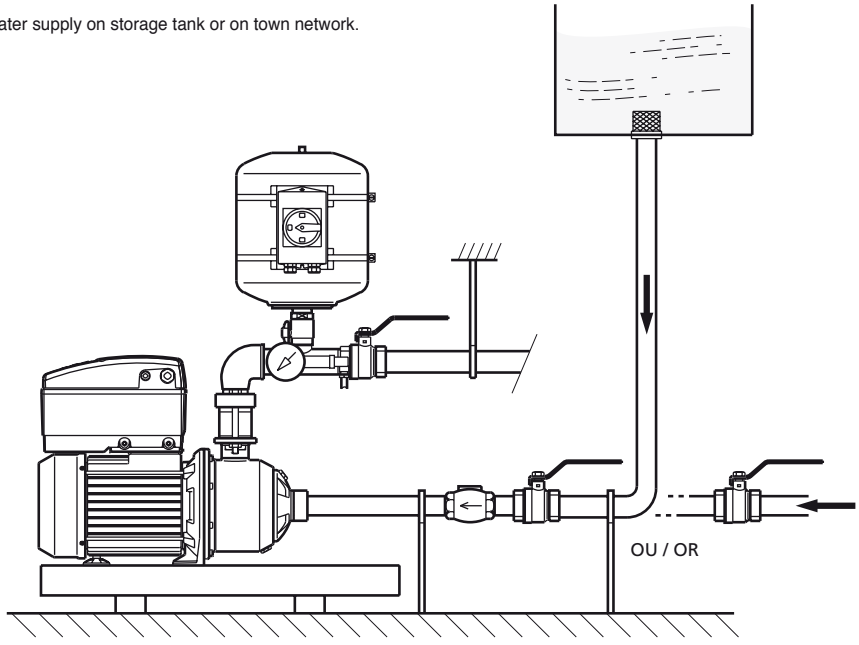

HYDRAULIC PERFORMANCES

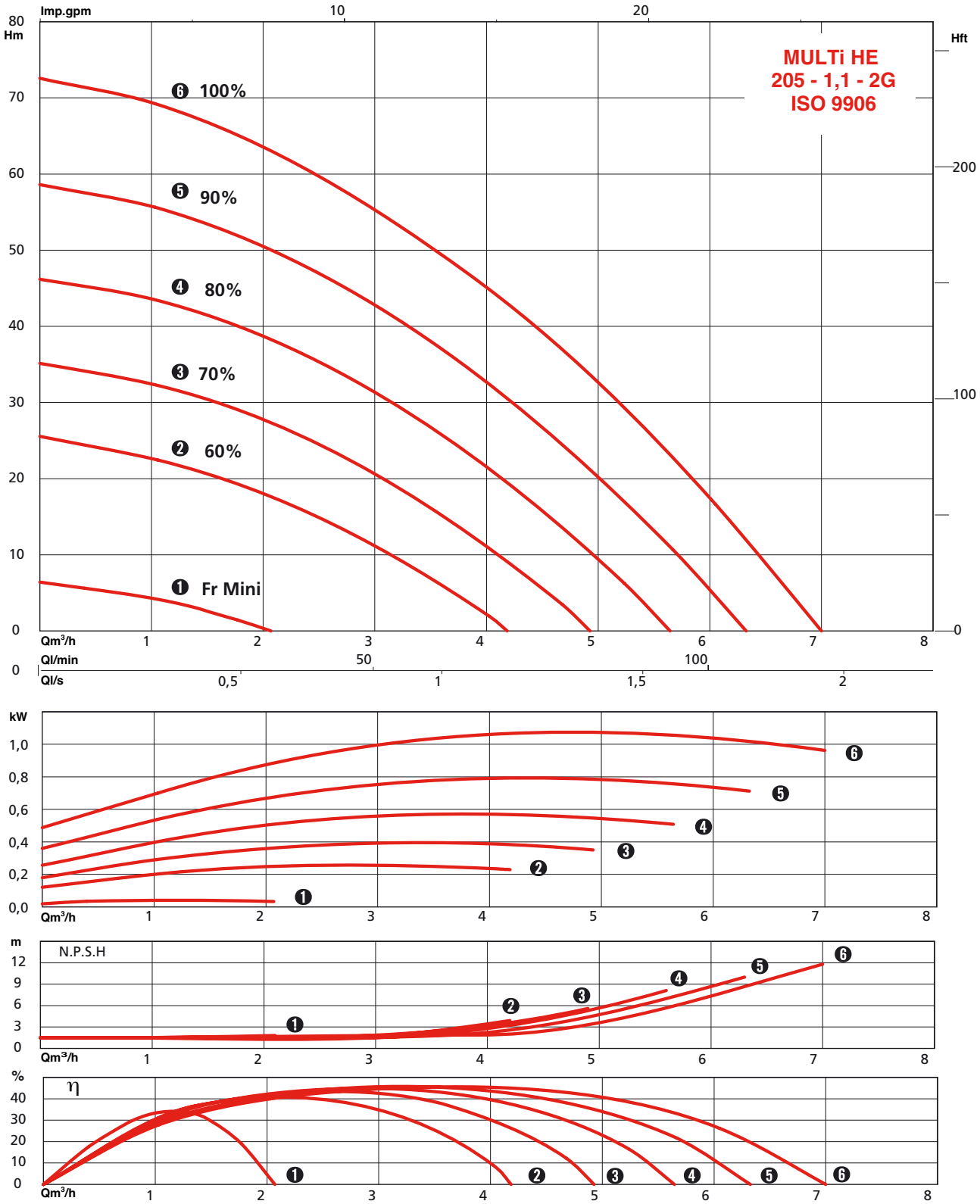

HYDROMINI MULTI-HE

HYDRAULIC PERFORMANCES

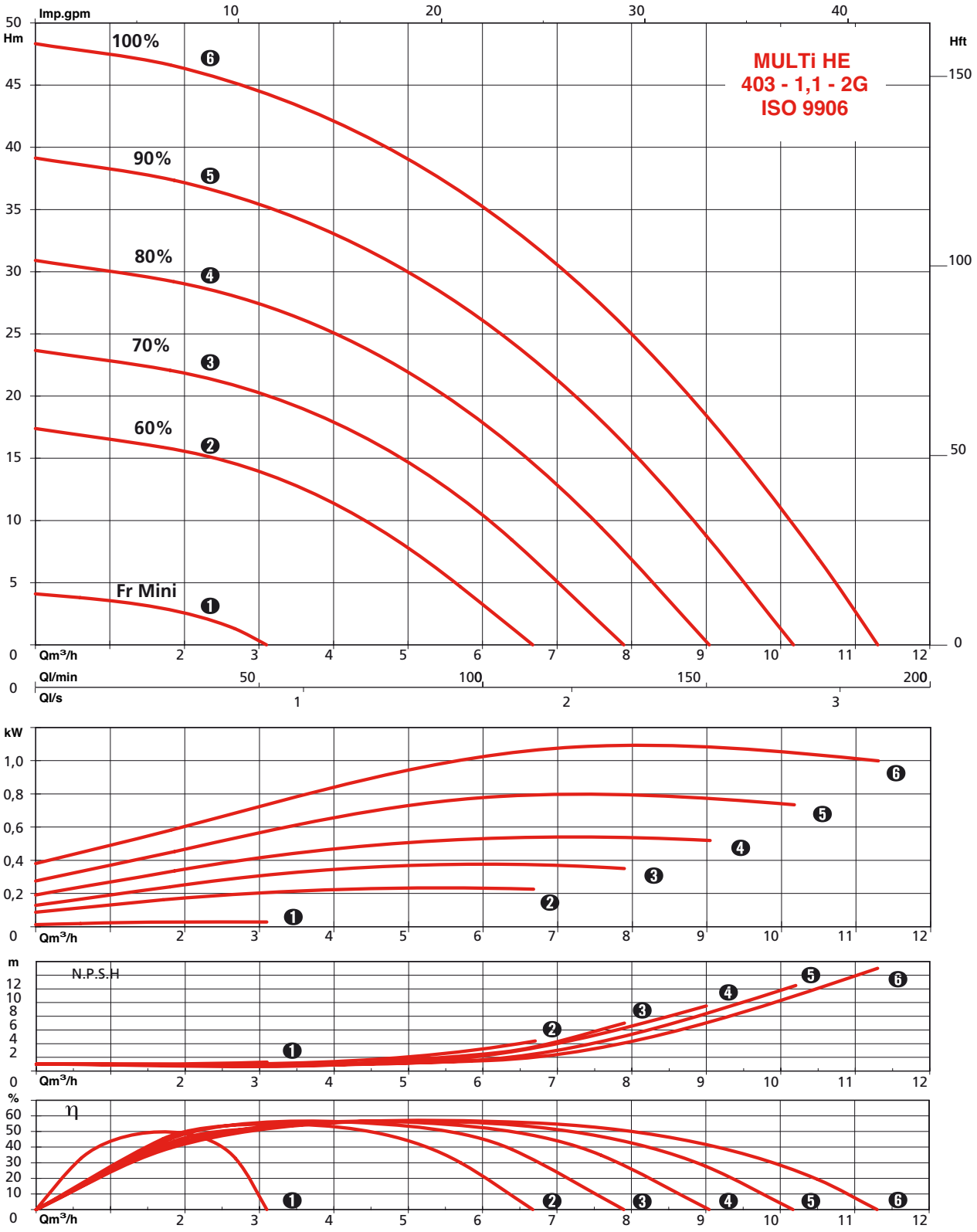

HYDRAULIC PERFORMANCES

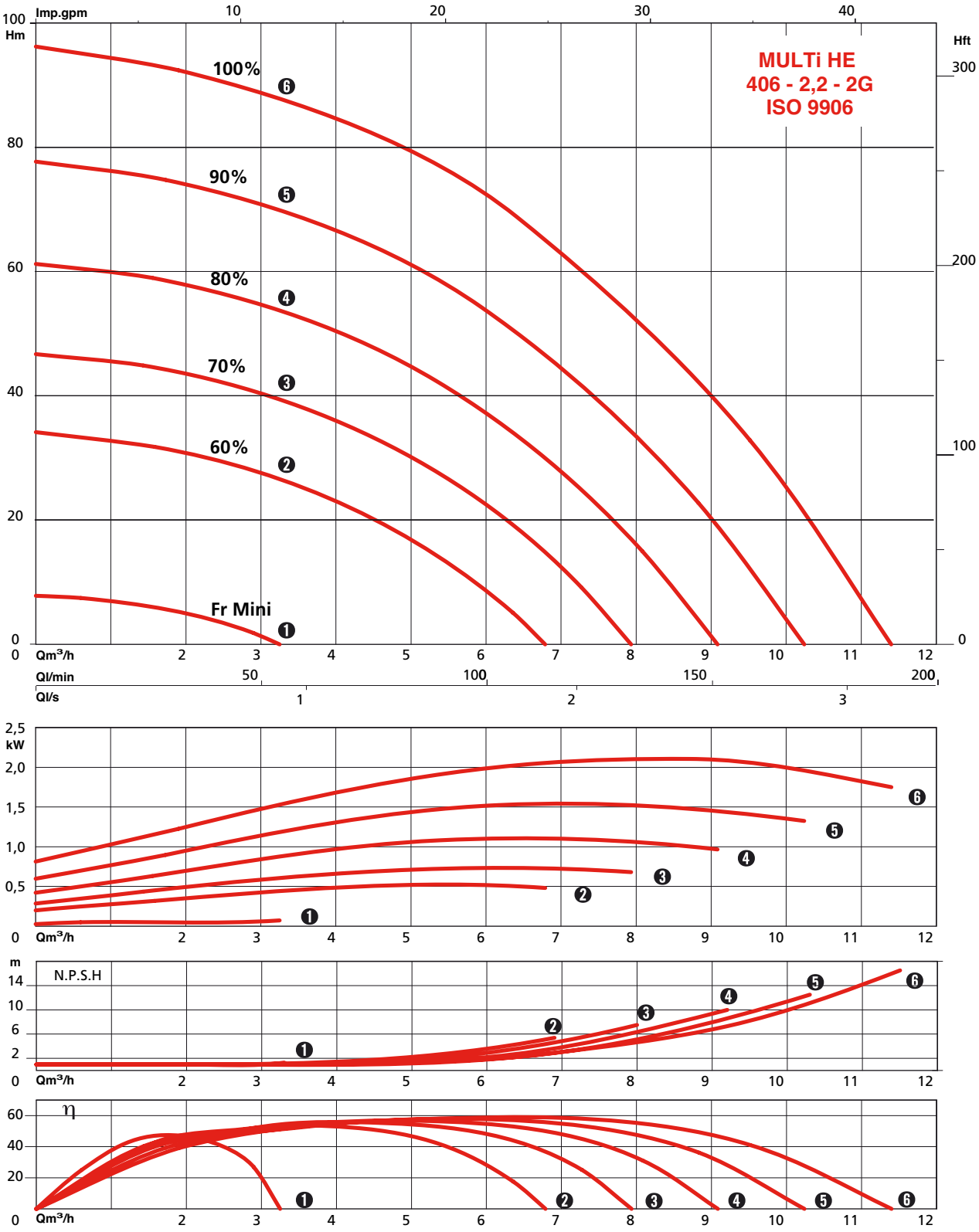

HYDROMINI MULTI-HE

HYDRAULIC PERFORMANCES

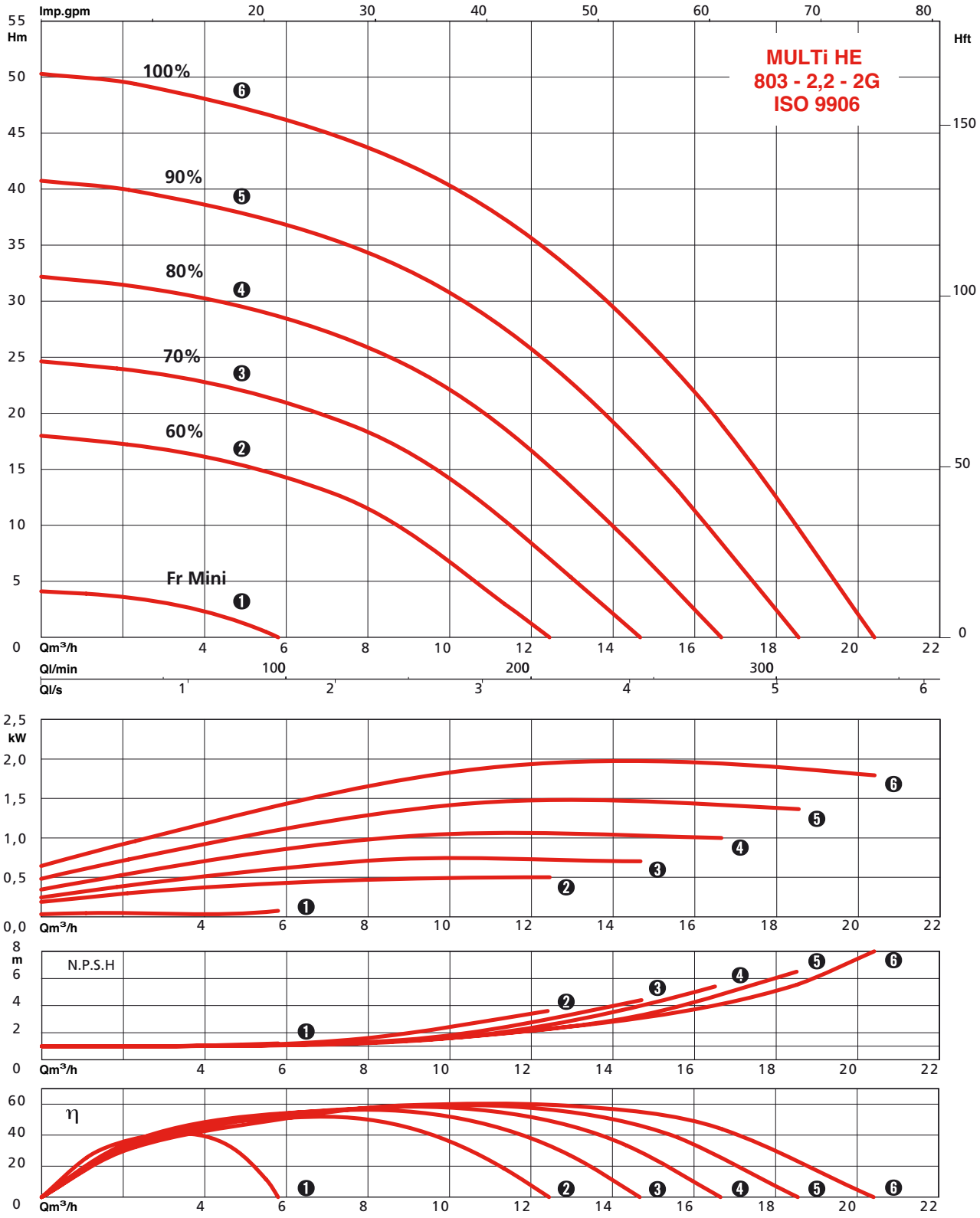

ELECTRICAL DATA AND DIMENSIONS

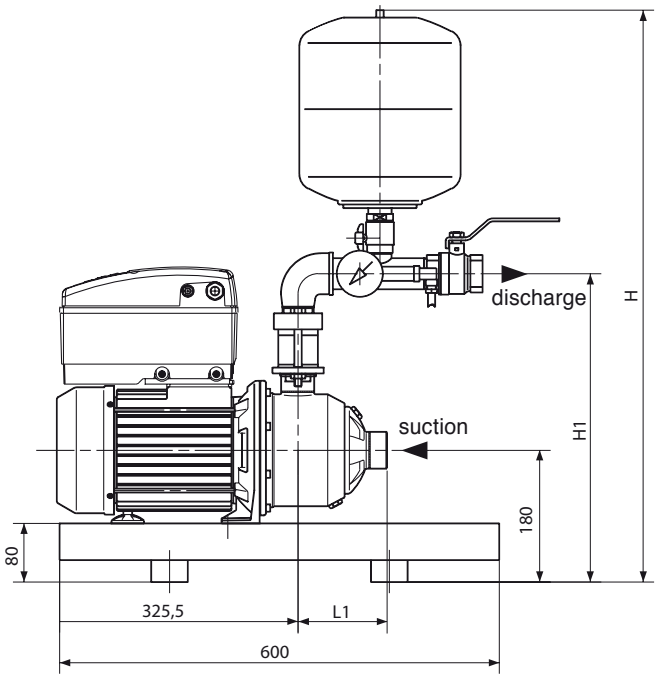

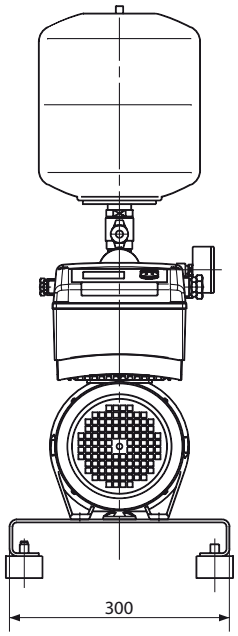

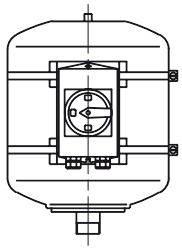

Power switch 3-phase

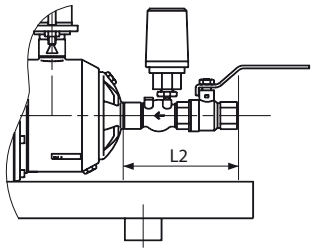

Dry running protection kit
for town network

Order Reference	In (A)	In (A)	In (A)	P1	P2	L1	L2	H1	H	Ø Suc.	Ø Dis.
	50Hz-3x400V	60Hz-3x380V	60Hz-3x440V	kW	kW	mm	mm	mm	mm		
MULTi-HE 205-T-V8-2G	4	3,2	2,9	1,55	1,1	109,5	114	410	770	1»	1»1/4
MULTi-HE 403-T-V8-2G	4,1	2,9	2,7	1,55	1,1	109,5	122,5	410	770	1»1/4	1»1/4
MULTi-HE 406-T-V8-2G	6,6	5,3	4,7	2,65	2,2	157,5	122,5	410	770	1»1/4	1»1/4
MULTi-HE 803-T-V8-2G	6	4,6	4,1	2,85	2,2	121,5	134,5	435	800	1»1/2	1»1/2

HYDROMINI MULTI-HE

ACCESSORIES

- Dry running protection kit for town network
  (with 1 pressure switch, 1 check valve and 1 valve).
- Dry running protection kit on storage tank.
- Power switch 3-phase.
- Anti-vibration sleeves



• Anti-vibration sleeves



• Dry running protection kit
(for connection to town water supply).

• Power switch* 3-phase



• Dry running protection kit for storage tank.



FEATURES

a) Installation

- On smooth floor or concrete block.

- the installation must allow the pump's protection against bad weather and freezing (no direct exposure to the rain or the sun).

b) Packaging

- On pallet with carton packing.

OPERATING LIMITS

Flow rates up to:	**10 m3/h**
Head up to:	**80 mCE**
Max. discharge pressure:	**10 bar**
Max. water temperature:	**+ 50°C**
Max ambient temperature:	**+ 40°C**

HYDROMINI MULTI-HE (1~)

BOOSTERS

Domestic and small-scale collective uses with integrated EVS* 50/60 Hz

***Electronic Speed Variation**

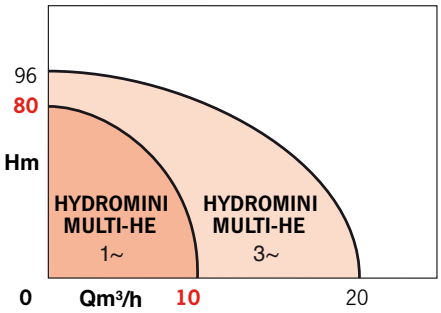

APPLICATIONS

Pressure boosting in a distribution network where there is too low or none pressure, in a domestic or small-scale collective context:
- Water supply and distribution from a town network or a storage tank.
- Irrigation
- Sprinkling.

For houses, small building, …

ADVANTAGES

- **Boosters entirely assembled, wired and preset, ready to use.**
- **Easy installation: an electrical connection and two hydraulic connections. Unions assembled allowing discharge port rotation.**
- **Automatic operation, discharge pressure regulation.**
- **Tank with interchangeable bladder in Butyl.**
- **Energy saving and sound levels reduction by adapting pump speed to requirements.**
- **Flexible use, reduction of hammering and knocking.**

Certified ACS

EVS



• MULTi-HE-205-M-V8

HYDROMINI MULTI-HE (1~)

DESIGN

Pre-assembled automatic boosters, ready to be installed.

• Hydraulic part

- Centrifugal with horizontal axis, no self-priming.
- Multi-stage with 3 to 5 stages.
- Impellers mounted directly on the motor shaft extension.
- Standard mechanical seal.

• Motor

- Dry motor, 2 pole, equipped with E.V.S.

Rotation speed :	Variable
Winding :	1~ 220 to 240V ± 6%
Frequency :	50 and 60 Hz
Insulating category :	155 (F)
Protection index :	IP 54

IDENTIFICATION

MULTI-HE 2 05-M-V8

Pump code
Nominal flow in m^3/h
Number of stages
M = 1-phase
Vessel size in litre

OPERATION

Mode 2 / Automatic pump boost system

Pump alone using pressure regulation. The pump is installed with its pressure sensor which can attached either on the discharge pipe. Once the pump is installed, pressure is adjusted through touch pad.

Operation:

When the real pressure measured on the sensor drops below the set pressure, the pump starts and controls its speed to achieve the set pressure. The pump stops automatically when it detects zero flow.

STANDARD CONSTRUCTION

Main parts	Material
Pumps Multi-HE 200/400	Stainless steel 304
Union	Brass
Non-return valve	Brass

BOOSTER DESCRIPTION

1. Pump MULTI-HE (205; 403)
2. Sensor kit (10 bar)
3. Vessel with interchangeable bladders 8L, 16b
4. Pressure gauge
5. Non-return valve
6. Union
7. Dry running protection kit for town network* (also available for storage tank)

*options

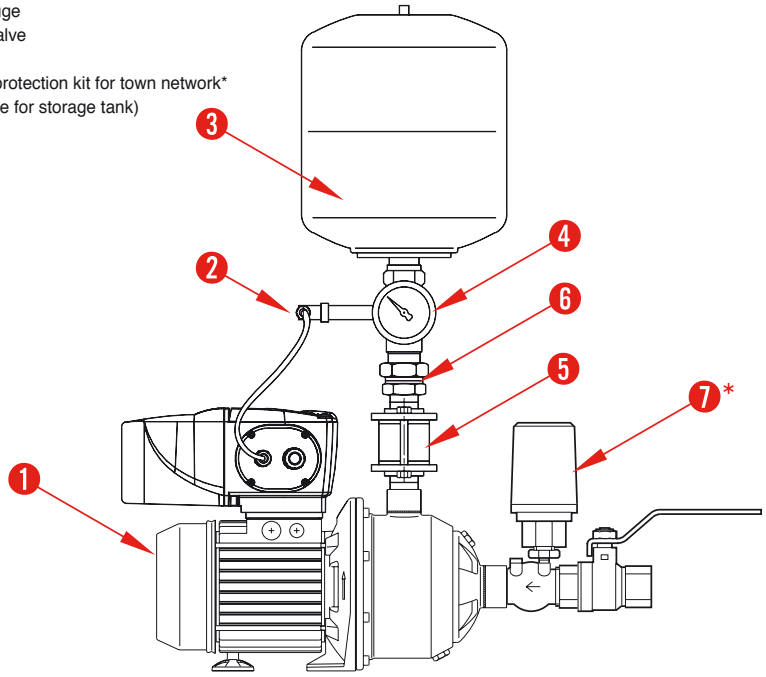

INSTALLATION

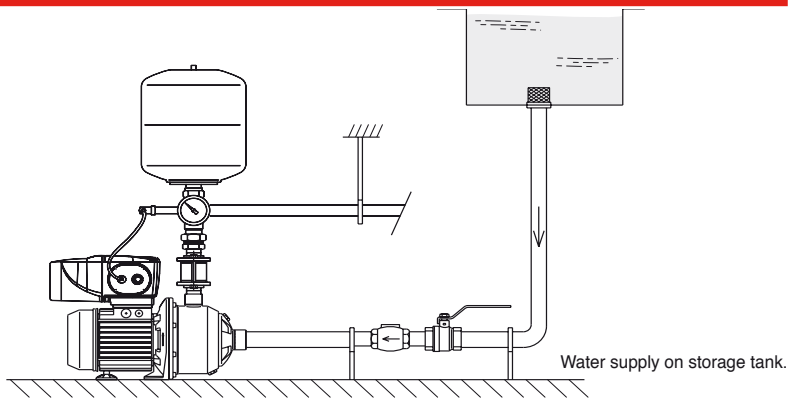

Water supply on storage tank.

OU/OR

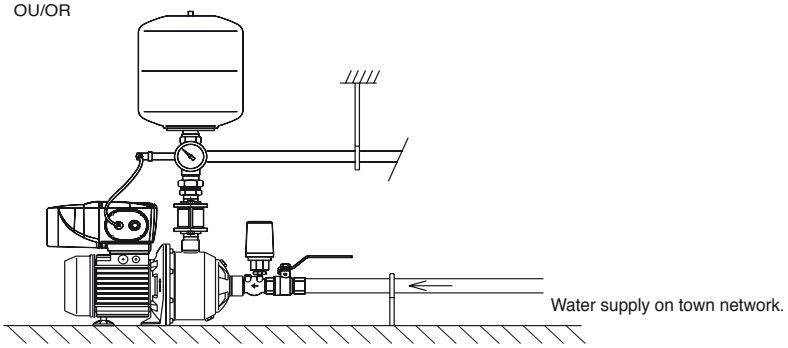

Water supply on town network.

HYDRAULIC PERFORMANCES

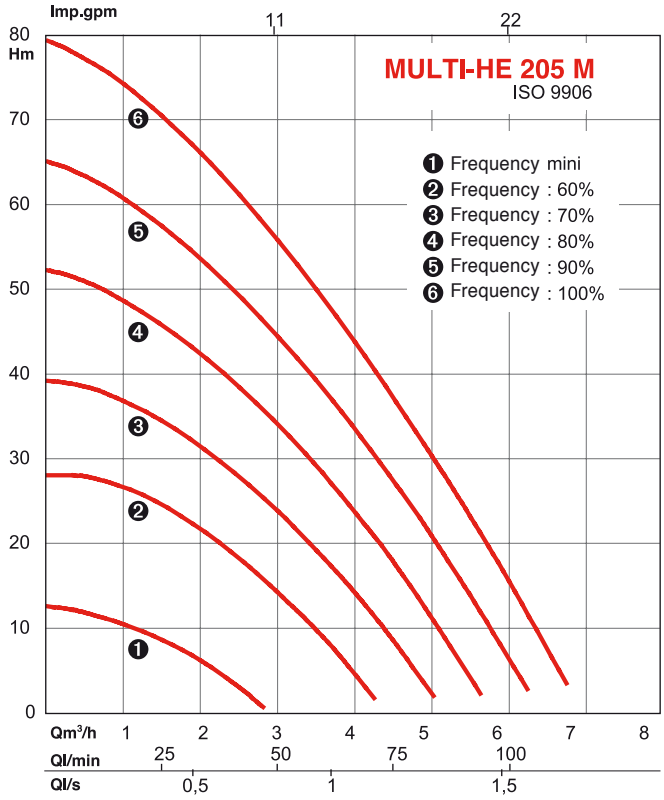

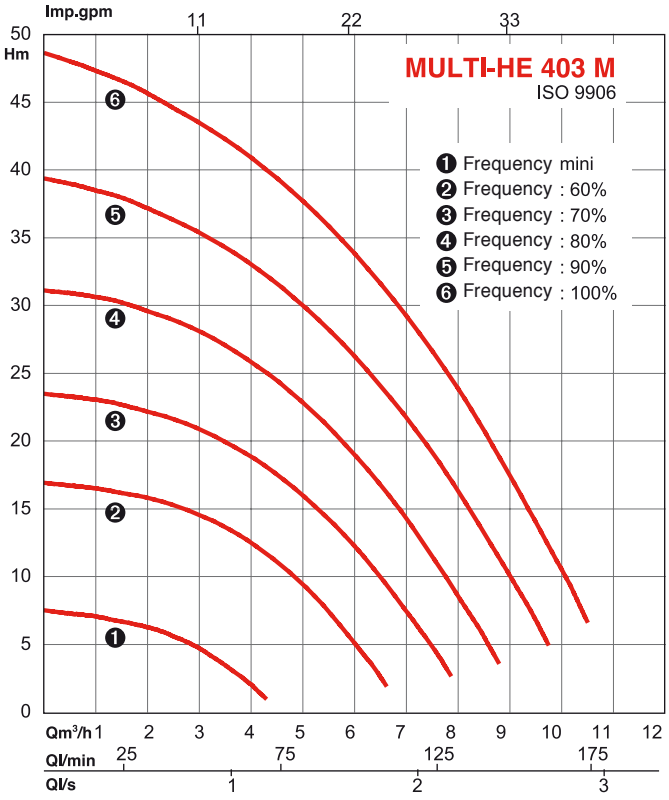

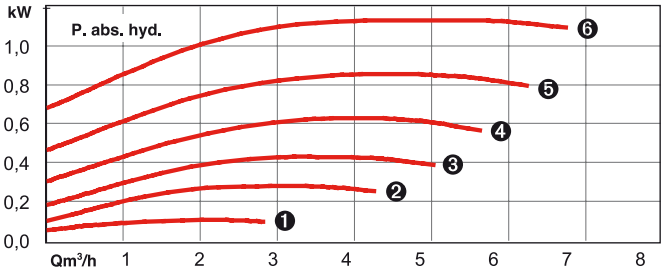

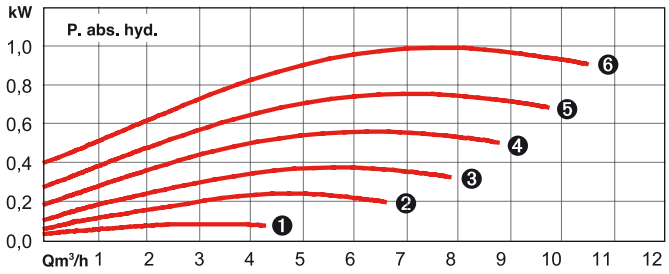

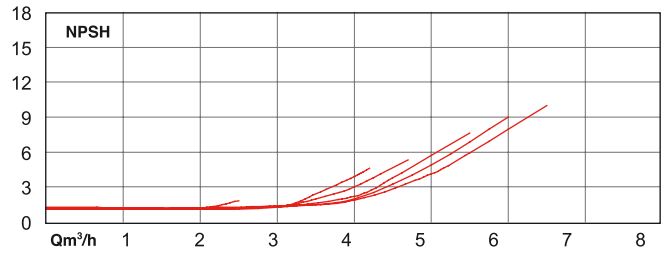

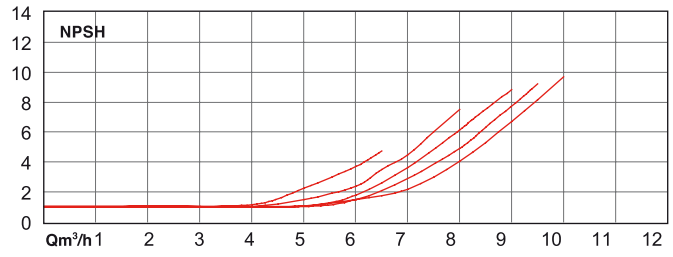

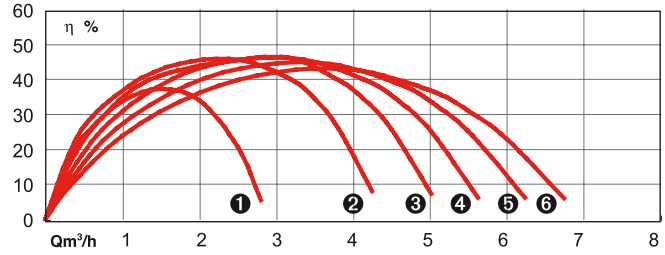

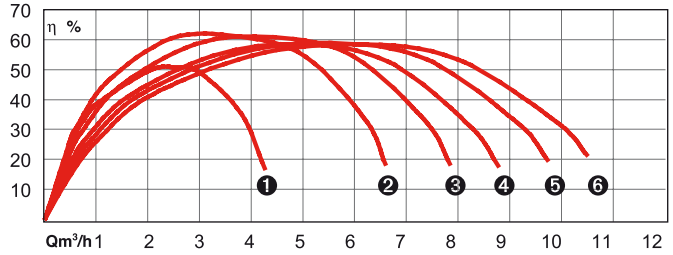

HYDROMINI MULTI-HE (1~)

ELECTRIC AND DIMENSIONAL CHARACTERISTICS

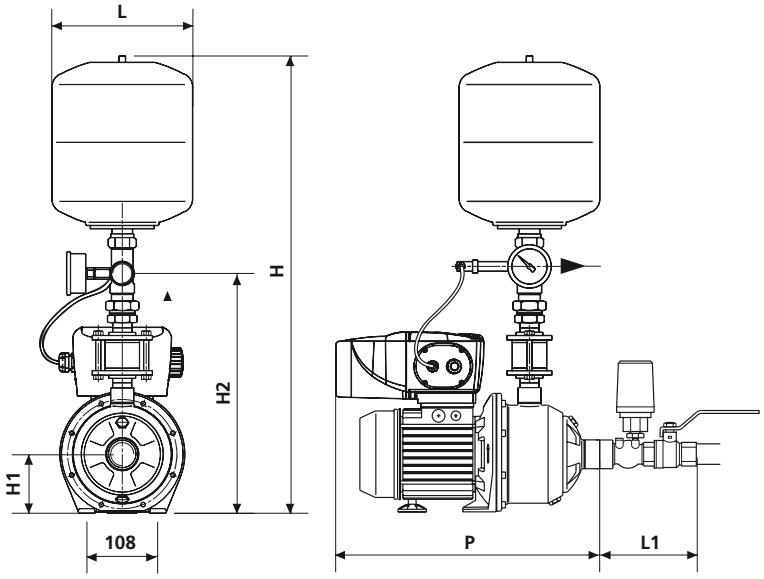

Dry running protection kit
for town network (option)

	P2	ƒ	Voltage	Current	H	L	L1	P	H1	H2	Suc.	Dis.
	kW	Hz	V	A								
Multi-HE 205-M-V8	1,1	50	1x230	11,6	725	220	114	460	90	370	1”	1”
		60	1x220	11,9								
		60	1x240	11,2								
Multi-HE 403-T-V8	1,1	50	1x230	11,6	725	220	122,5	412	90	370	1”1/4	1”
		60	1x220	11,9								
		60	1x240	11,2								

FEATURES

a) Installation

- On smooth floor or concrete block.
- the installation must allow the pump’s protection against bad weather and freezing (no direct exposure to the rain or the sun).

b) Packaging

- On pallet with carton packing.

RECOMMENDED ACCESSORIES

- Dry running protection kit for town network (with 1 pressure switch, 1 non-return valve and 1 valve).



- Dry running protection kit for storage tank.



MULTI-V

VERTICAL "STAINLESS STEEL" MULTISTAGE PUMPS

OPERATING RANGES

Flow rates of up to:	**140 m³/h**
Manometric heads of up to:	**240 m**
Max. delivery pressure :	**16 & 25 bar**
Max. suction pressure:	**10 bar**
Temperature range:	**– 15° to + 120°**C**
Max. ambient temperature:	**+ 40°C**
DN (nominal diameter) of holes:	**25 to 100**
Reference MEI*:	**≥ 0,40**

*Minimum Efficiency Index

** according to mechanical seal

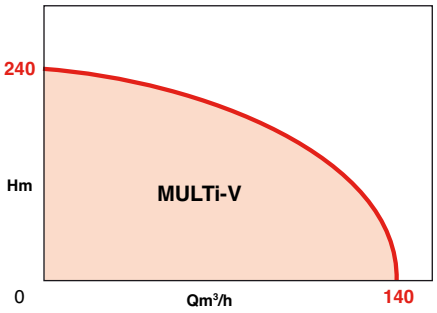

APPLICATIONS

Pumping of clean, non-muddy liquids in the housing, agricultural and industrial sectors:
- Supply - Boosting
- Watering - Irrigation
- High-pressure washing
- Fire protection
- Heating - Air conditioning
- Water treatment (demineralisation, filtration)

And for incorporation into all modular systems.

Pumped fluids

- **Standard range:** clear and non-corrosive liquids (drinking water, glycol water...)
- **316L range:** corrosive liquids (demineralised seawater, chlorinated water...)

BENEFITS

- **Stainless steel hydraulic assembly: protection from corrosion and extended pump life.**
- **Bearing (lantern ring) extends the life of the motor bearing and eliminates the setting and axial adjustment of the mobile elements.**
- **Tungsten carbide Intermediate bearing: controls and eliminates vibrations and ensures rotor stability with a large number of stages.**
- **Suction rings between very thick cells: impervious to thermal expansion and eliminates the risk of seizing.**
- **Optimal reliability: high outputs thanks to the impeller profile, which reduces the number of stages, the sizes of the shafts and the axial thrusts.**
- **Standardised mechanical seals Maintenance free to +120°C max.**
- **Easy installation: IN-LINE ports.**

MULTi-V 80, 100

- **Easier maintenance: Cartridge mechanical seal available on all models. Allows the installer or operator to replace the mechanical seal without removing the pump.**
- **Spacer design available on all models ≥ 11 kW.**

Allows the installer or operator to replace the mechanical seal without dismantling the pump and without removing the motor.

Certified ACS



• MULTi-V PN16
with oval flanges



• MULTi-V PN25
with "Victaulic" connectors



• MULTi-V 1800 PN 25
All 316L stainless steel hydraulic assembly



• MULTi-V 8000 / 100.00
PN 16 and PN 25



• Cartridge mechanical seal

MULTI-V

DESIGN

• Hydraulic part

- Centrifugal.
- Multi-stage, 2 to 24 stages.
- Vertical axis, IN-LINE suction-delivery ports in lower part.
- Flanged housing in PN 16 and PN 25.
- Lower guide bearing above the 2nd stage for versions 1 at 60 m3/h (apart from models with 2 and 3 stages above the 1st stage).
- Standardised mechanical seal ensures leak-tightness of the shaft passage.
- Housing and hydraulic assembly assembled by stud bolts.

• Motors

- Standard ventilated.
- Flanges and shaft end conform to IEC standard.
- Connected to pump by coupling with safety guards.

Rotation speed:	2900 rpm	
4 kW 3 ~ winding:	230-400 V :	T
above three-phase:	400 V :	T4
Frequency:	50 Hz (optional 60 Hz)	
Insulation class:	155 (F)	
Protection class:	IP 55	

Key : **2-pole motor** Ⓜ

BASIC CONSTRUCTION

Main parts	**Material**	
liquids	**non-corrosive**	**corrosive**
Model	**all**	**except 80/100**
Suction housing - ref.	ENGJL 250 Cast iron	316L stainless steel
Lantern ring mount	ENGJL 250 Cast iron	
Impellers	304 stainless steel	316L stainless steel
Cells (stage housing)	304 stainless steel	316L stainless steel
External pipe sleeve	304 stainless steel	316L stainless steel
Pump shaft	304 stainless steel*	316L stainless steel
Intermediate bearing	Tungsten carbide	
Mechanical seal	Silicon carbide/Carbon	
O-rings	EPDM (120°)	Viton (90°)
Plugs	316L stainless steel	316L stainless steel

NB : 316 L stainless steel (X2Cr Ni Mo 17.12.2) recommended materials offering excellent corrosion resistance. Clean and clear liquids with no fibres and low sand/silica content (max. concentration 40g/m3).
***AISI 304 stainless steel** MULTi-V 80/100/36C/60C models are equipped with an AISI 431 stainless steel pump shaft.

MULTI-V CONSTRUCTION

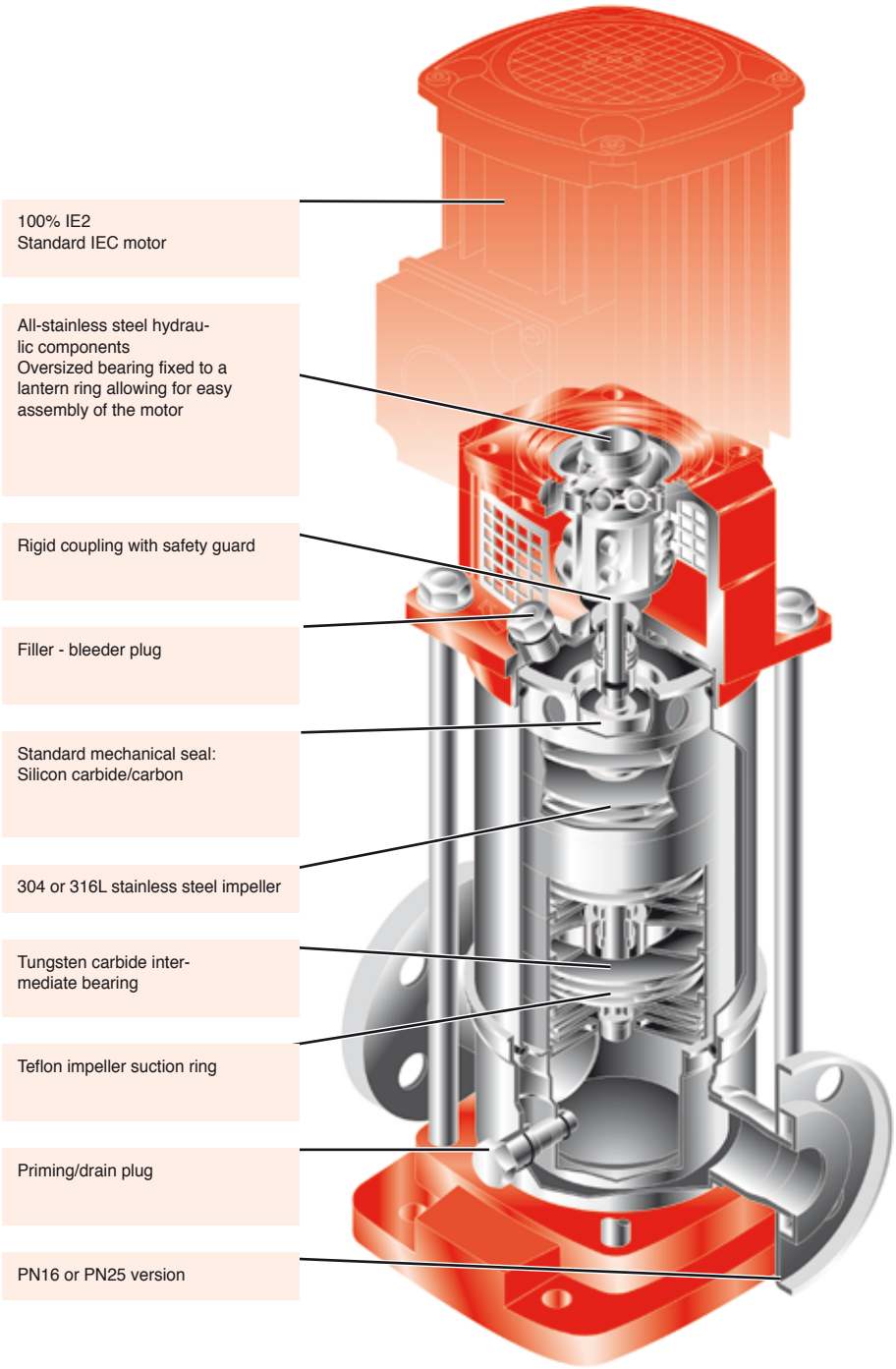

NB: MULTi-V 80 and **100** pumps are equipped with a cartridge mechanical seal and, optionally, a SPACER.

IDENTIFICATION

MULTI-V10004/2N-OGE-T/2/6/OEM/XX/B

- Pump family
- Nominal flow rate in m^3/h (at 50 Hz / 2 pole)
- Number of impellers
- /1 or /2: number of trimmed impellers out of the total no. of impellers. ex: 8004/2, 2 trimmed impellers out of 4
- N = Standardised motor, if the same power exists in a downgraded casing
- O = PN16 oval flanges
  F = PN25 round flanges
  R = Victaulic connector
- G = EN GJL-250 cast iron pump housing + 304 stainless steel hydraulics
  X = 316L stainless steel
- E = O-rings: EPDM
  V = O-rings: VITON
- Version index
- Technical definition code
- Original Equipement Manufacturer
- nothing = 50 hz
  6 = 60 hz
- Number of poles
- M = 1~
  T = 3 ~ : 50Hz - 230/400V
  60Hz - 220 to 255 / 460V
  T4 = 3 ~: 50Hz - 400V
  60Hz - 460V
  nothing= without motor

SERIES CONFIGURATION

SERIE	max. operating pressure	50 Hz motor	suction-delivery flanges	number of stages
		2 pole		
	16 bar	•	oval G1	2 to 14
MULTI-V 100	25 bar	•	round DN 25	2 to 24
	16 bar	•	oval G1	2 to 12
MULTI-V 200	25 bar	•	round DN 25	2 to 20
	25 bar	•	"Victaulic" 11/4	2 to 20
	16 bar	•	oval G11/4	2 to 12
MULTi-V 400	25 bar	•	round DN 32	2 to 19
	16 bar	---	round DN 32	10-14-20
	25 bar	•	"Victaulic" 1"1/4	2 to 9
	16 bar	•	oval G11/2	2 to12
MULTi-V 800	25 bar	•	round DN 40	2 to19
	16 bar	---	round DN 40	10-14-20
	25 bar	•	"Victaulic" 2"	2 to 19
	16 bar	•	oval G2	2 to 11
MULTi-V 8000	16 bar	•	round DN 100 (Ø100)	1 to 5
	25 bar	•	round DN 100 (Ø100)	1 to 7
MULTi-V 100.00	16 bar	•	round DN 100 (Ø100)	1 to 4
	25 bar	•	round DN 100 (Ø100)	1 to 5

MULTI-V

HYDRAULIC PRE-SELECTION RANGES MULTI-V I 2 POLE - 50 HZ

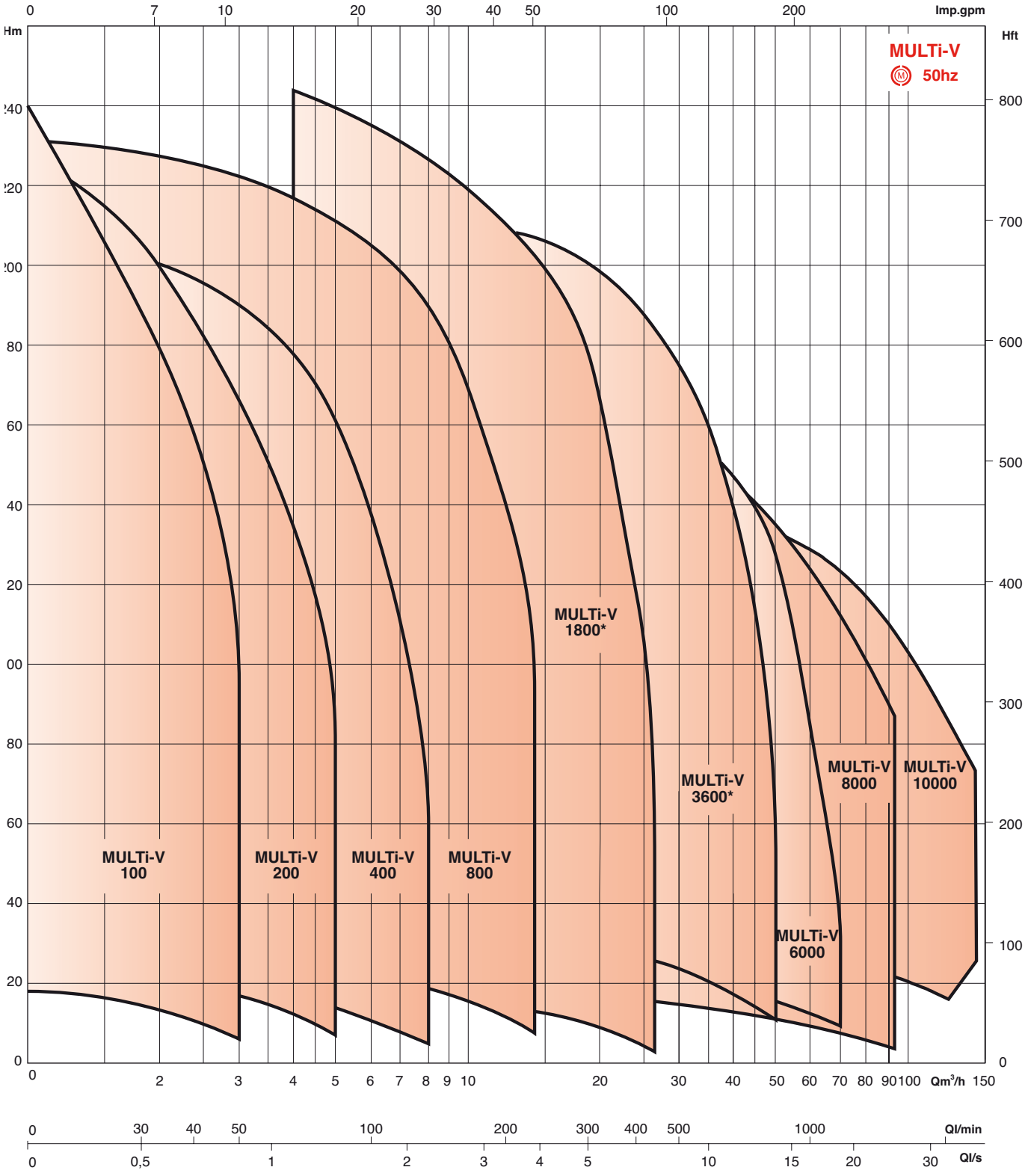

SECTIONAL DIAGRAM - MULTI-V 1 - 2 - 4

MULTi-V 1/2/4
1"1/4 - PN16

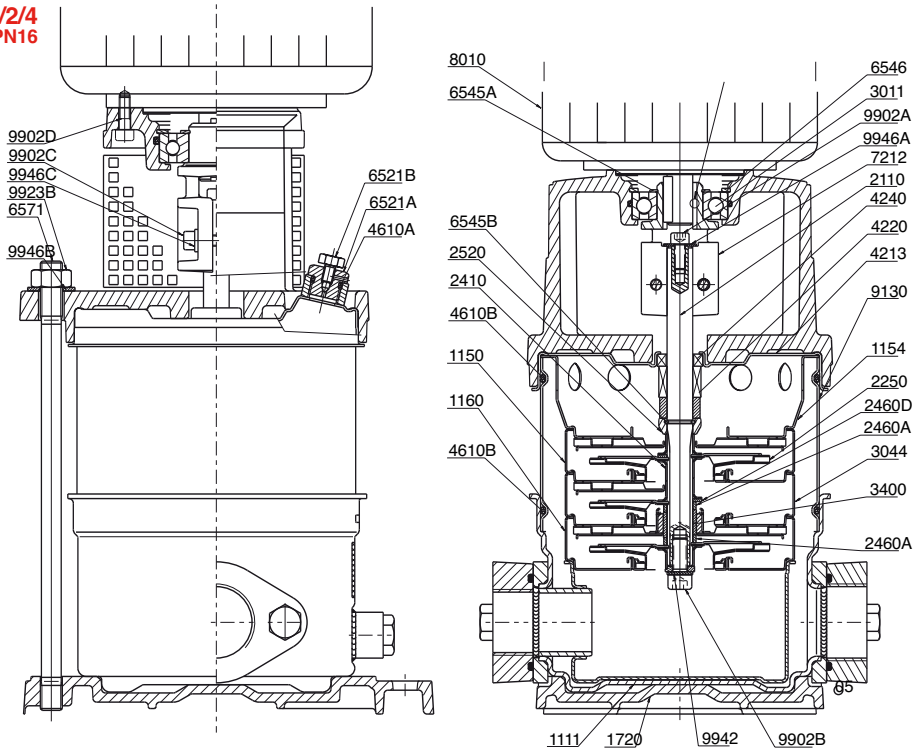

MULTi-V 1/2
1"1/4 - PN25 VICTAULIC

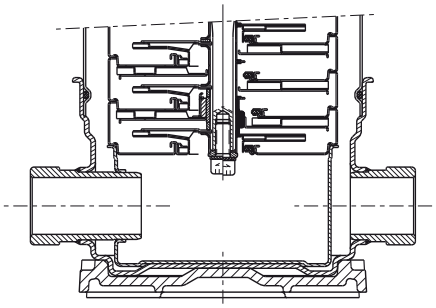

MULTi-V 4
DN32 - PN25

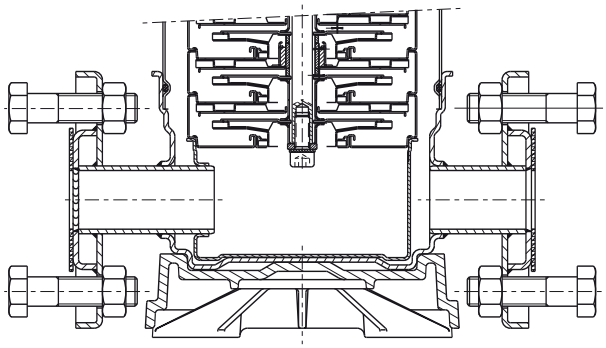

MULTi-V 1/2
DN25 - PN25

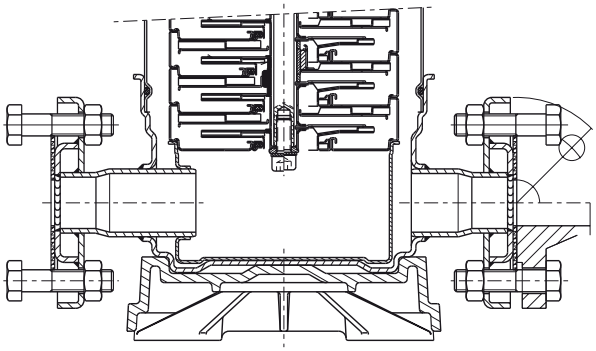

1111 - Pump housing
1150 - Stage housing with interstage crossover
1154 - Cell centring device
1160 - Stage housing without interstage crossover
1720 - Pump attachment sole plate
• 2110 - Pump shaft
• 2250 - Impeller
2410 - Impeller spacer

2460 A - Shim spacer - shaft sleeve
2460 C - Mechanical seal shimming ring
2460 D - Intermediate washer
2520 - Support ring
2911 - Lower shaft end washer
• 3011 - Lantern ring ball bearing
3044 - Stage housing with intermediate bearing
3160 - Motor mounting lantern ring

• 3400 - Shaft sleeve
4213 - Throat bushing casing
• 4220 - Rotating part | Seal
• 4240 - Fixed | Mechanical part
• 4610 A - O-ring (filler plug)
• 4610 B - O-ring (external pipe sleeve)
• 4610 C - O-ring | (drain
• 4610 D - O-ring | and priming plug)

MULTI-V

SECTIONAL DIAGRAM - MULTI-V 8

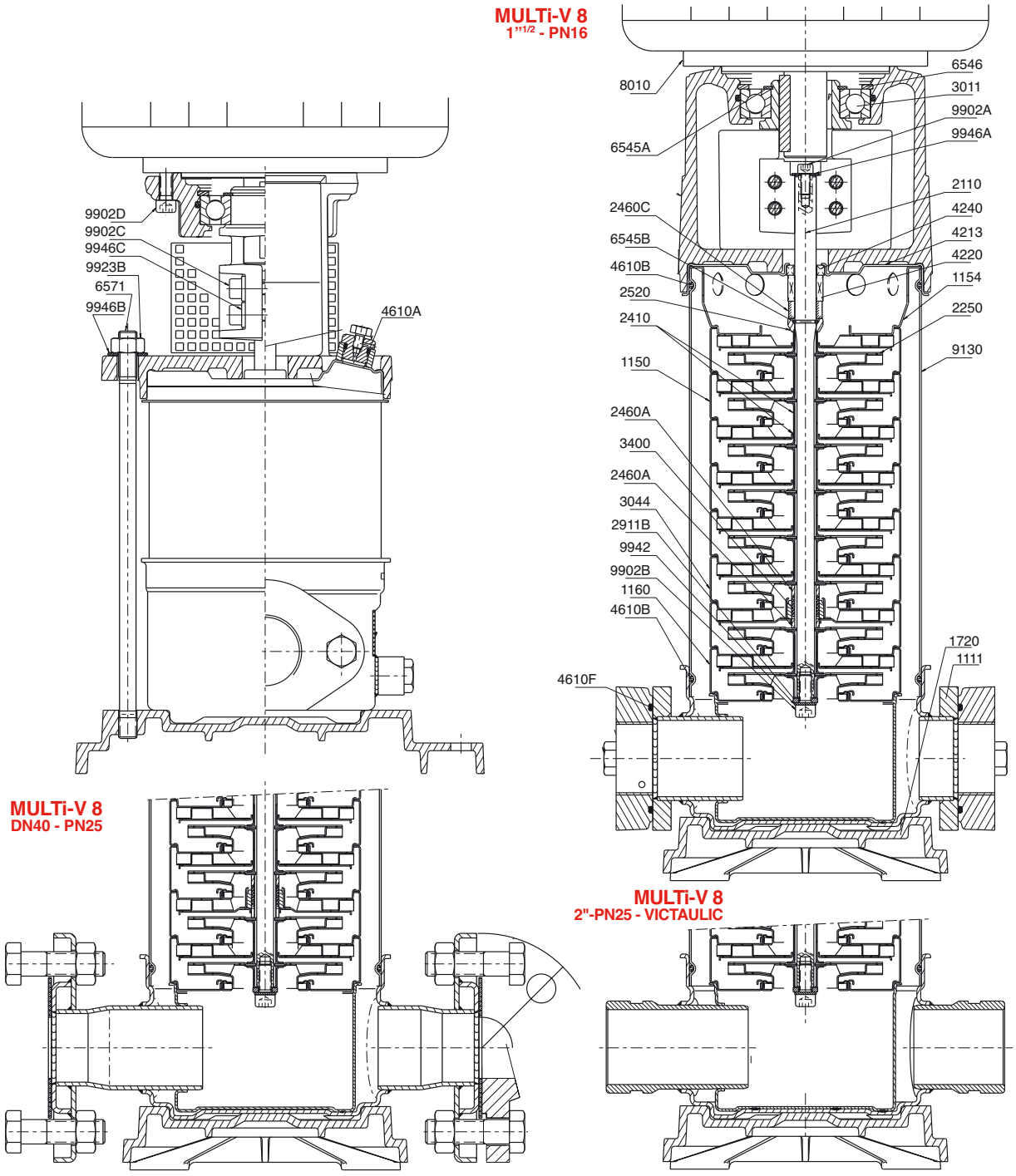

6515 - Drain and priming plug
6521 - Filler - bleeder plug
• 6545 A - Circlip (lantern ring bearing)
6545 B - Half-snap ring (support ring)
• 6546 - Circlip (lantern ring bearing)
6571 - Assembly stud bolt
7212 - Coupling
7450 - Coupling guard

• 8010 - Electric flanged motor
9130 - External sealing pipe sleeve
9902 A - Upper shaft end screw
9902 B - Lower shaft end screw
9902 C - Coupling attachment screw
9902 D - Motor attachment screw
9906 E - H. motor attachment screw
9923 B - Assembly stud bolt nut

9923 E - H. motor attachment nut
9942 - Toothed washer under screw 9902 B
9946 A - Washer under screw 9902 A
9946 B - Washer under nut 9923 B
9946 C - Washer under screw 9902 C

• Recommended spare parts

SECTIONAL DIAGRAM - MULTI-V 80 - 100

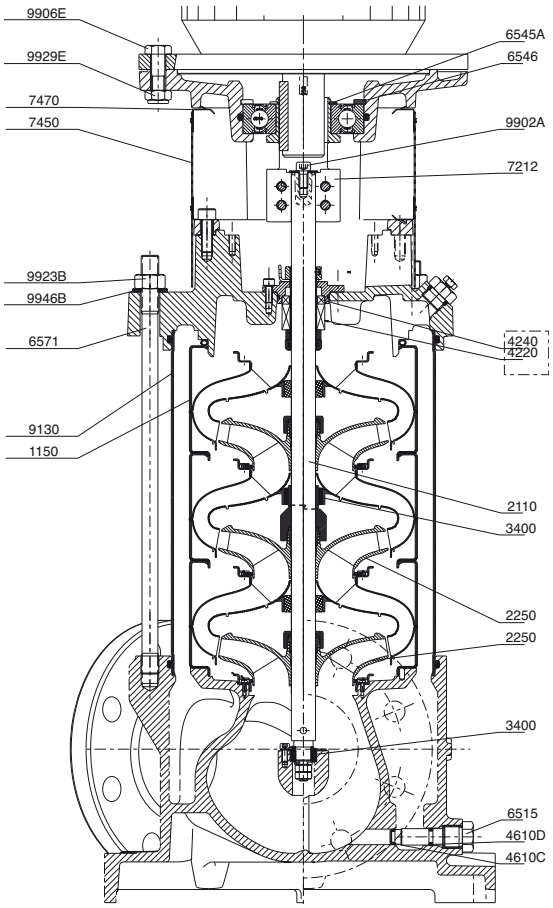

1150 - Stage housing with interstage crossover
•2110 - Pump shaft
•2250 - Impeller
3400 - Shaft sleeve
•4220 - Rotating part Seal
•4240 - Fixed Mechanical part
•4610 C - O-ring
•4610 D - O-ring
6515 - Drain and priming plug
•6545 A - Circlip (lantern ring bearing)
•6546 - Circlip (lantern ring bearing)
6571 - Stud bolts
7212 - Coupling with 4 screws
7450 - Coupling guard
7470 - Attachment clip for coupling guard
9130 - External sealing pipe sleeve
9902 A - Shaft end screw in coupling
9906 E - Motor attachment bolt
9929 E - Self-locking nut
9923 B - M16 nut for stud bolts
9946 B - ø 16 narrow contact ring
• Recommended spare parts.

SECTIONAL DIAGRAM - 80 LANTERN RING AND 100 m³/h

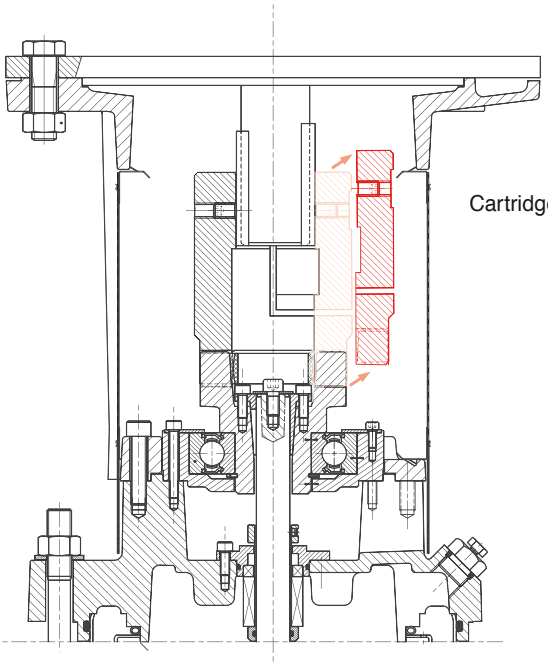

Cartridge mechanical seal

MULTI-V

HYDRAULIC PERFORMANCE AT 2900 RPM - 2 POLE

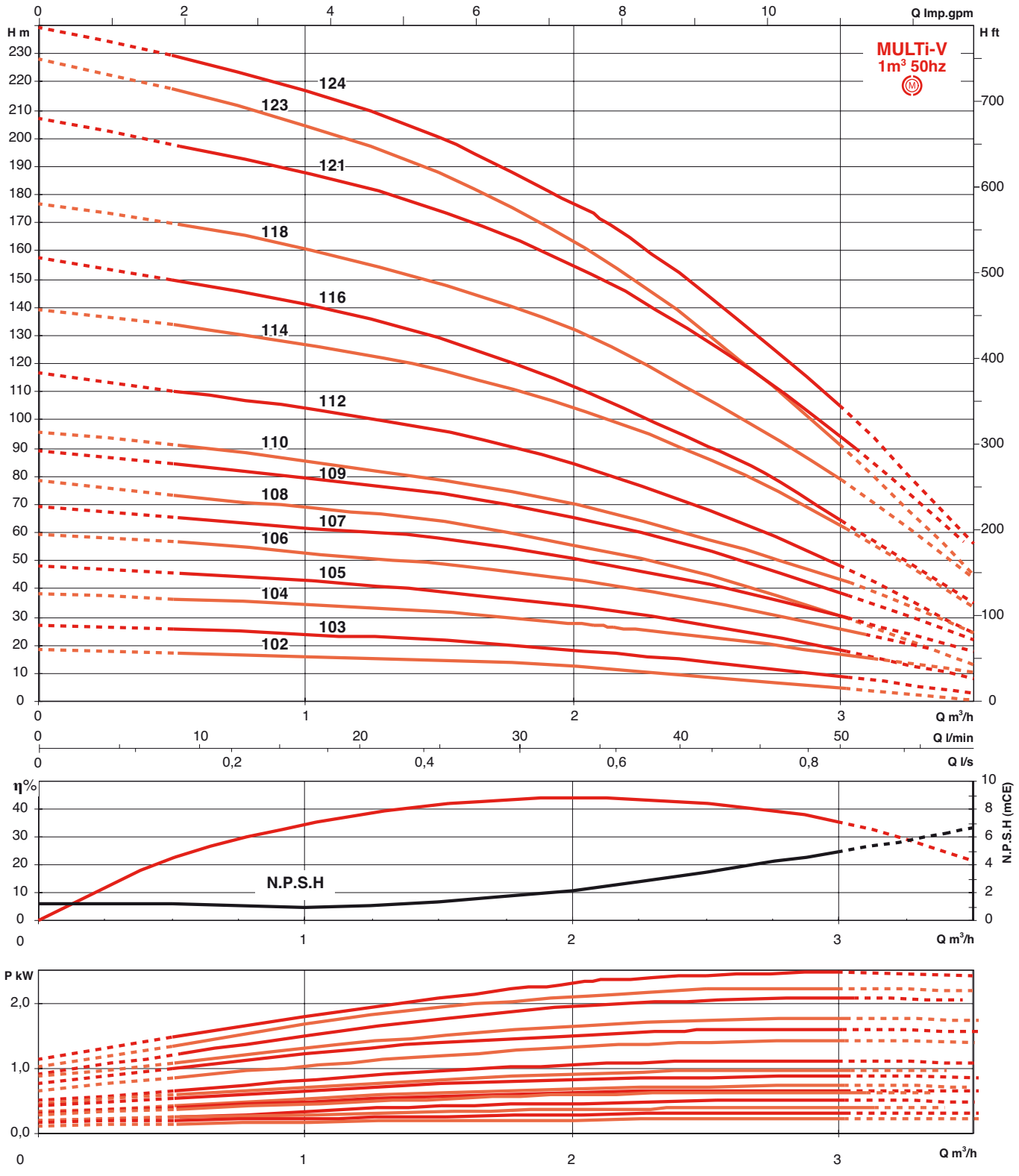

HYDRAULIC PERFORMANCE AT 2900 RPM - 2 POLE

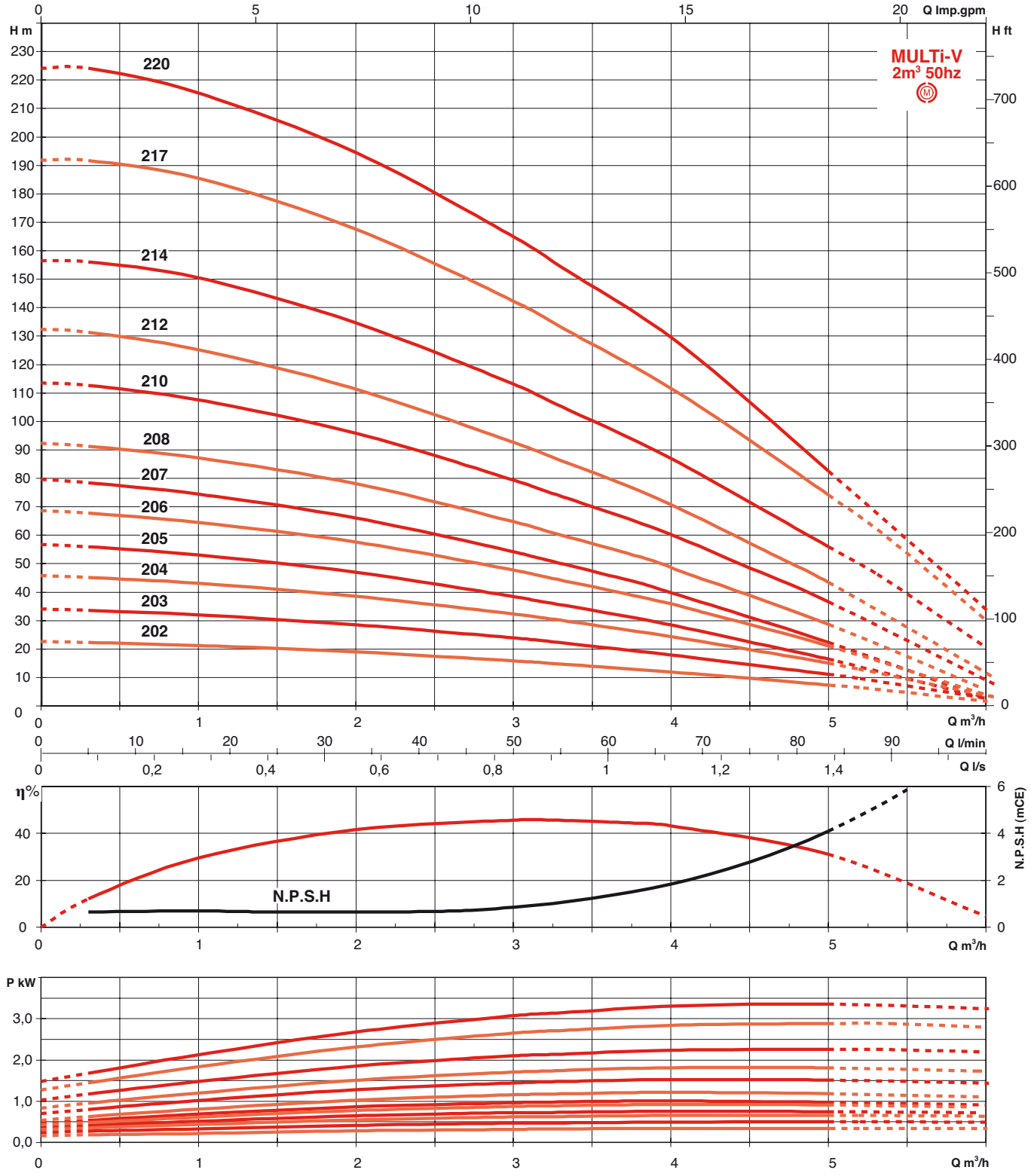

MULTI-V

HYDRAULIC PERFORMANCE AT 2900 RPM - 2 POLE

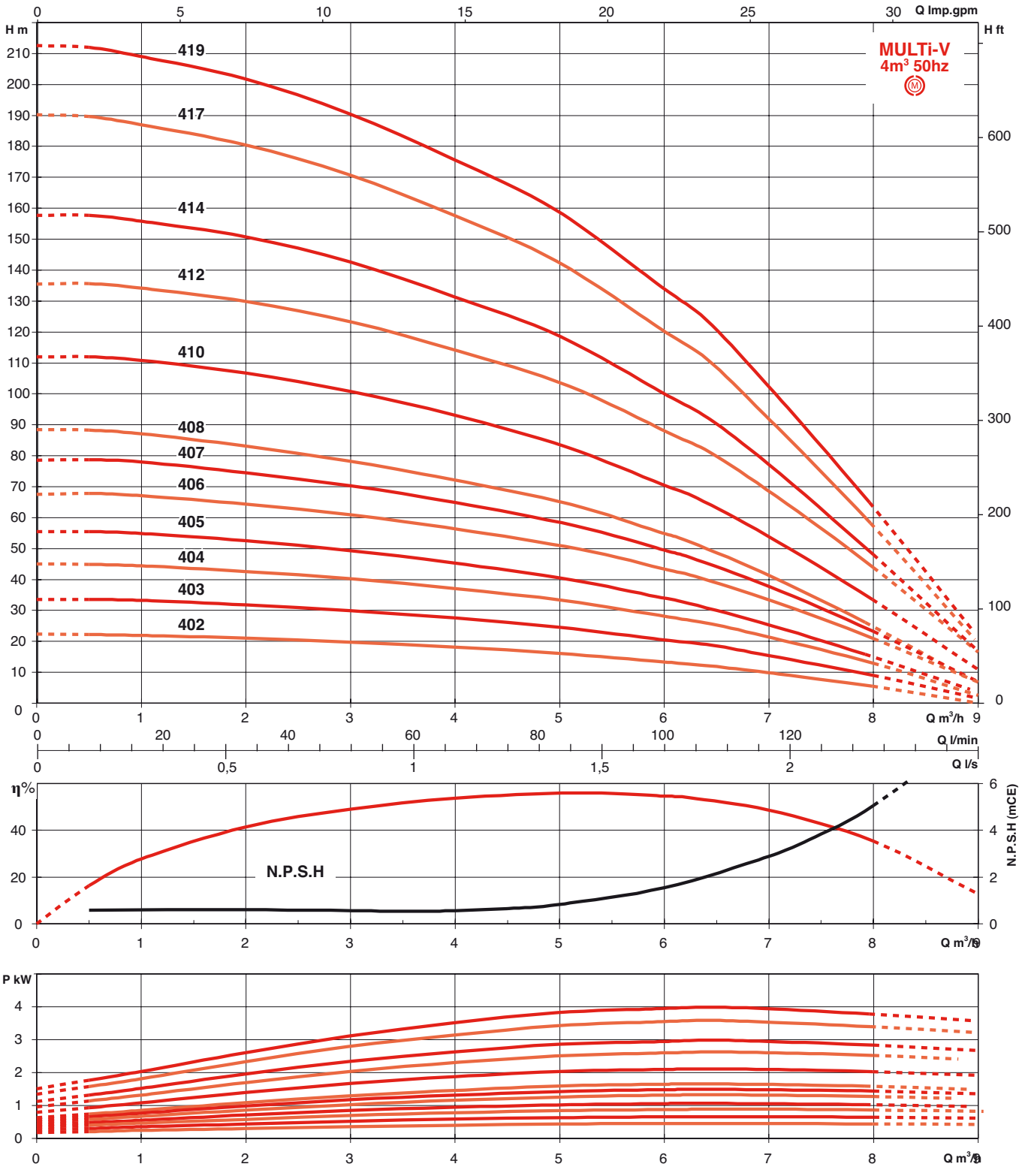

HYDRAULIC PERFORMANCE AT 2900 RPM - 2 POLE

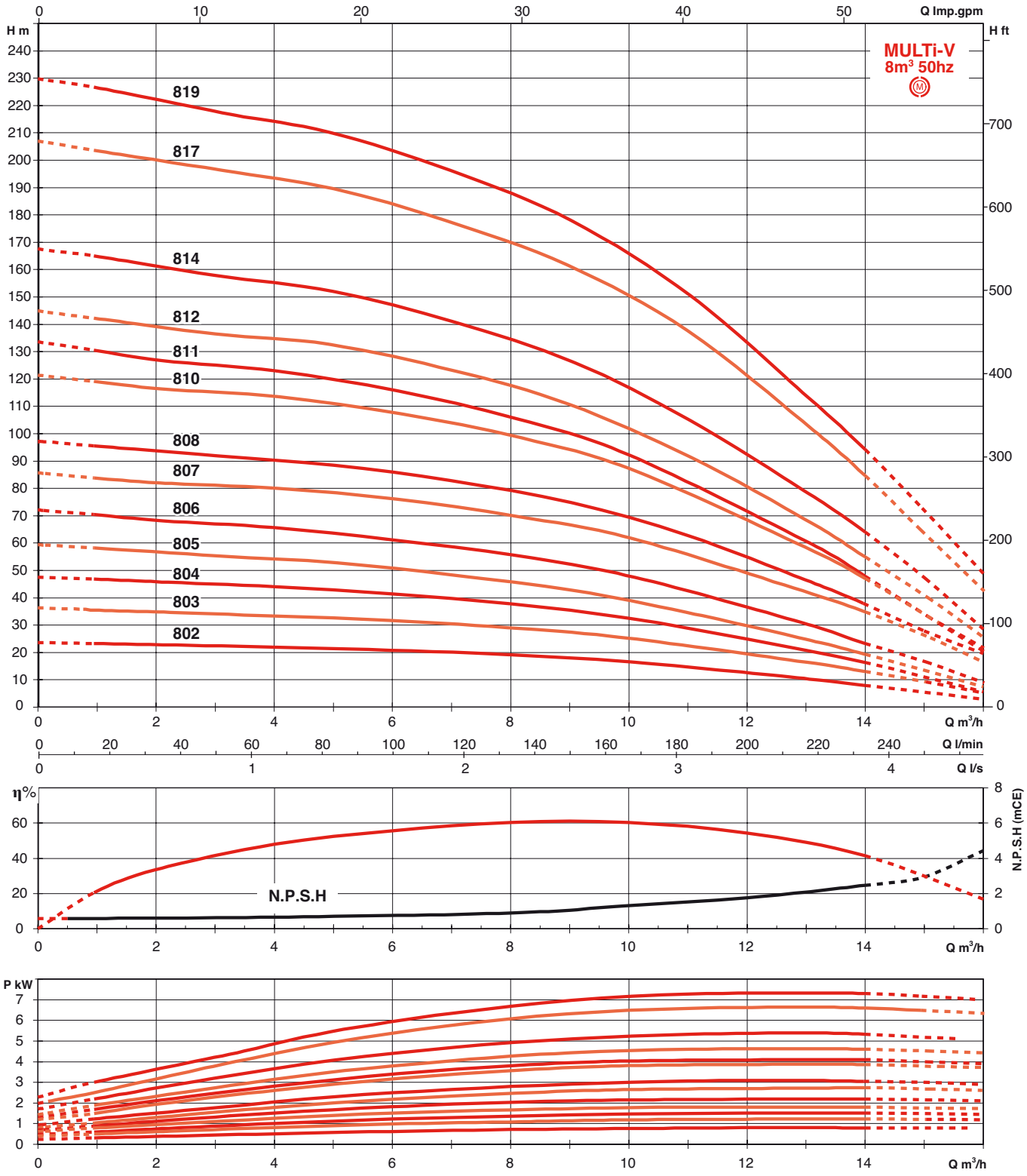

MULTI-V

HYDRAULIC PERFORMANCE AT 2900 RPM - 2 POLE

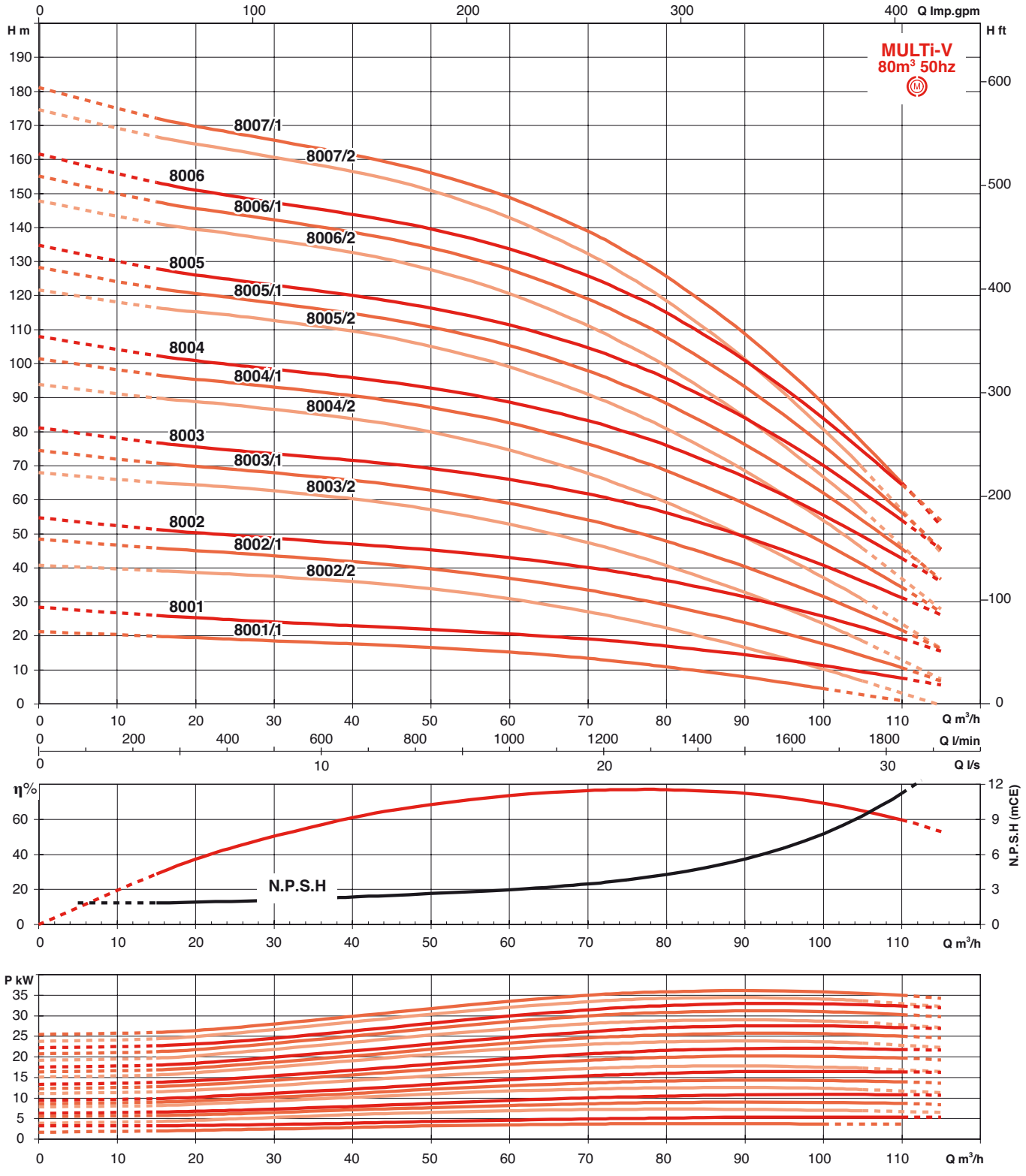

HYDRAULIC PERFORMANCE AT 2900 RPM - 2 POLE

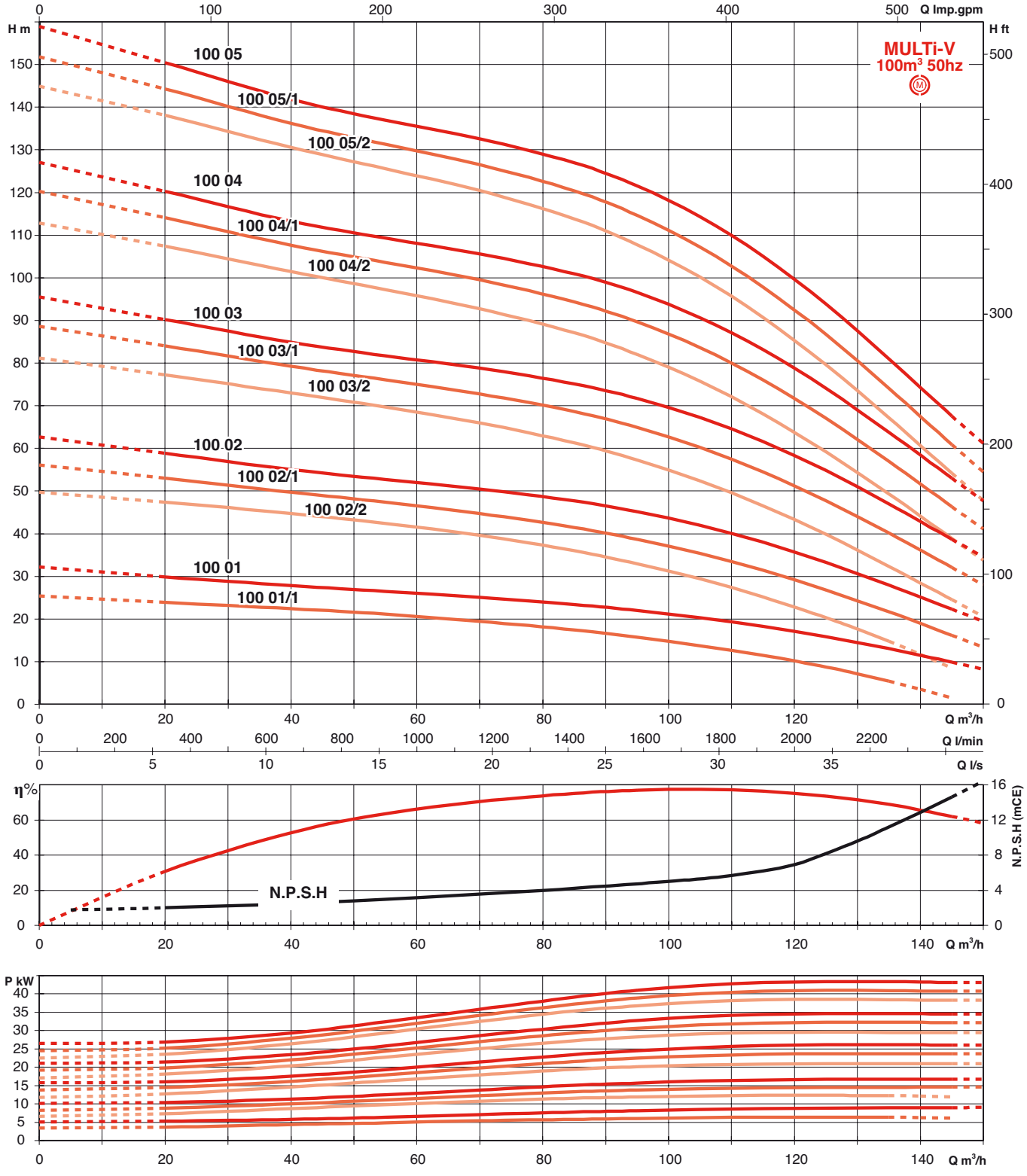

MULTI-V

ELECTRICAL AND DIMENSIONAL CHARACTERISTICS MULTI-V 100 - 2 POLE

• PN 16 - DN G1

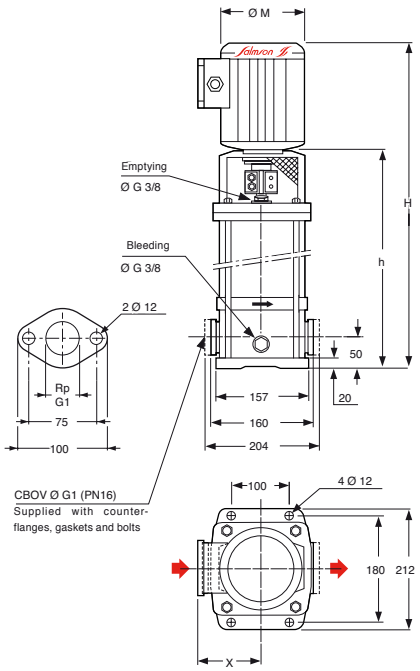

• PN 25 - DN 25

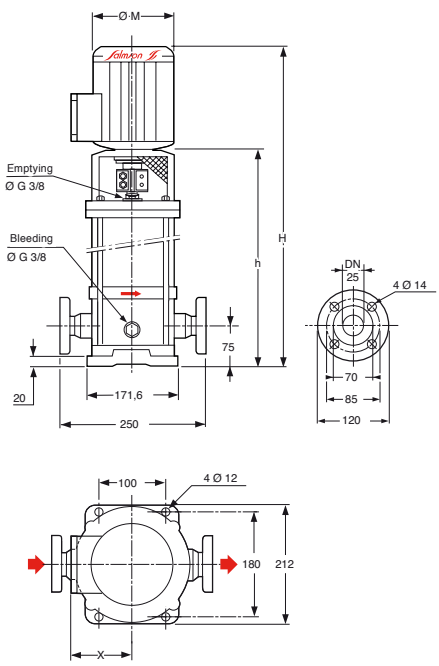

• PN 25 - «VICTAULIC" 1"1/4 CONNECTOR

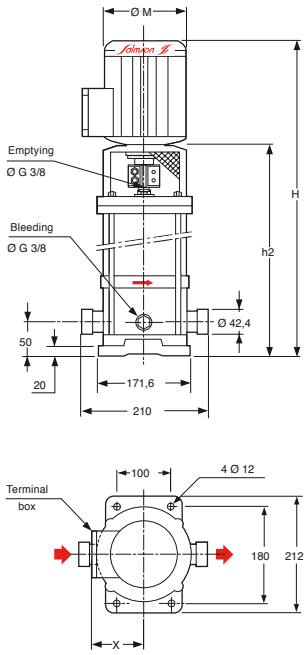

ORDER REFERENCE	MOTOR									PUMP								MASS (kg)			
	P2	Efficiency according to load (%)			Power factor	Speed	Motor attachment	In (A)				PN 16 G1		PN 25 DN 25		PN 25 Victaulic		PN 16 With packaging		PN 25 With packaging	
		4/4	3/4	2/4				1 x	3 x	3 x	ØM	X	H	h	H	h	H	h2	Motor		Motor	
	kW				cos ϕ	rpm		230 V	400 V	230 V	mm	mm	mm	mm	mm	mm	mm	mm	No	With	No	With
MULTi-V 102-M/2	0,37	-	-	-	0,78	2860	14/FT85	2,7	–	–	140	107	490	305	515	330	–	–	12,8	19,5	13,9	20,6
MULTi-V 102-T/2	0,37	-	-	-	0,78	2860	14/FT85	–	0,93	1,6	140	118	528	305	552	330	528	305	12,8	18,8	13,9	19,9
MULTi-V 103-M/2	0,37	-	-	-	0,78	2860	14/FT85	2,7	–	–	140	107	506	305	515	330	–	–	13	19,7	14,1	20,8
MULTi-V 103-T/2	0,37	-	-	-	0,78	2860	14/FT85	–	0,93	1,6	140	118	528	305	552	330	528	305	13	19	14,1	20,1
MULTi-V 104-M/2	0,55	-	-	-	0,76	2860	14/FT85	3,6	–	–	140	107	506	305	515	330	–	–	13,2	20,6	14,3	21,8
MULTi-V 104-T/2	0,55	-	-	-	0,76	2860	14/FT85	–	1,32	2,28	140	118	528	305	552	330	528	305	13,2	19,7	14,3	20,9
MULTi-V 105-M/2	0,55	-	-	-	0,76	2860	14/FT85	3,6	–	–	140	107	530	345	555	370	–	–	14,4	21,9	15,5	23
MULTi-V 105-T/2	0,55	-	-	-	0,76	2860	14/FT85	–	1,32	2,28	140	118	568	345	592	370	568	345	14,4	21	15,5	22,1
MULTi-V 106-M/2	0,75	79	78	76	0,82	2850	19/FT100	4,85	–	–	162	121	570	355	595	380	–	–	14,9	24	16	25,1
MULTi-V 106-T/2	0,75	79	78	76	0,82	2850	19/FT100	–	1,62	2,77	170	127	598	355	623	380	598	355	14,9	23,9	16	25
MULTi-V 107-M/2	0,75	79	78	76	0,82	2850	19/FT100	4,85	–	–	162	121	590	375	615	400	–	–	15,6	24,7	16,7	25,8
MULTi-V 107-T/2	0,75	79	78	76	0,82	2850	19/FT100	–	1,62	2,77	170	127	618	375	643	400	618	375	15,6	24,6	16,7	25,7
MULTi-V 108-M/2	0,75	79	78	76	0,82	2850	19/FT100	4,85	–	–	162	121	630	415	655	440	–	–	16,8	25,9	17,9	27
MULTi-V 108-T/2	0,75	79	78	76	0,82	2850	19/FT100	–	1,62	2,77	170	127	658	415	683	440	658	415	16,8	25,8	17,9	26,9
MULTi-V 109-M/2	1,1	80,5	80,5	78	0,82	2850	19/FT100	6,6	–	–	162	121	630	415	655	440	–	–	17	27,8	18,1	28,9
MULTi-V 109-T/2	1,1	80,5	80,5	78	0,82	2850	19/FT100	–	2,4	4,2	170	127	658	415	683	440	658	415	17	27,2	18,1	28,3
MULTi-V 110-M/2	1,1	80,5	80,5	78	0,82	2850	19/FT100	6,6	–	–	162	121	650	435	675	460	–	–	17,7	28,4	18,8	29,6
MULTi-V 110-T/2	1,1	80,5	80,5	78	0,82	2850	19/FT100	–	2,4	4,2	170	127	678	435	703	460	678	435	17,7	27,8	18,8	29
MULTi-V 112-M/2	1,1	80,5	80,5	78	0,82	2850	19/FT100	6,6	–	–	162	121	690	475	715	500	–	–	19	29,8	20,1	30,9
MULTi-V 112-T/2	1,1	80,5	80,5	78	0,82	2850	19/FT100	–	2,4	4,2	170	127	718	475	743	500	718	475	19	29,2	20,1	30,3
MULTi-V 114-M/2	1,5	82	82	80	0,77	2900	24/FT115	9,1	–	–	182	131	770	525	795	550	–	–	22,4	39,9	23,5	41
MULTi-V 114-T/2	1,5	82	82	80	0,77	2900	24/FT115	–	3,2	5,6	193	151	791	525	816	550	791	525	22,4	35,6	23,5	36,7
MULTi-V 116-T/2	2,2	84	84	82	0,89	2900	24/FT115	–	4,4	7,6	193	151	–	–	856	590	831	565	–	–	24,9	38,9
MULTi-V 118-T/2	2,2	84	84	82	0,89	2900	24/FT115	–	4,4	7,6	193	151	–	–	896	630	871	605	–	–	26,3	40,3
MULTi-V 121-T/2	2,2	84	84	82	0,89	2900	24/FT115	–	4,4	7,6	193	151	–	–	956	690	931	665	–	–	28,4	44,4
MULTi-V 123-T/2	2,2	84	84	82	0,89	2900	24/FT115	–	4,4	7,6	193	151	–	–	1016	750	991	725	–	–	30,3	46,3
MULTi-V 124-T/2	3	84,6	85	82,5	0,88	2920	28/FT130	–	5,8	10,1	217	160	–	–	1055	760	1030	735	–	–	31,1	51,1

ELECTRICAL AND DIMENSIONAL CHARACTERISTICS MULTI-V 200 - 2 POLE

• PN 16 - DN G1

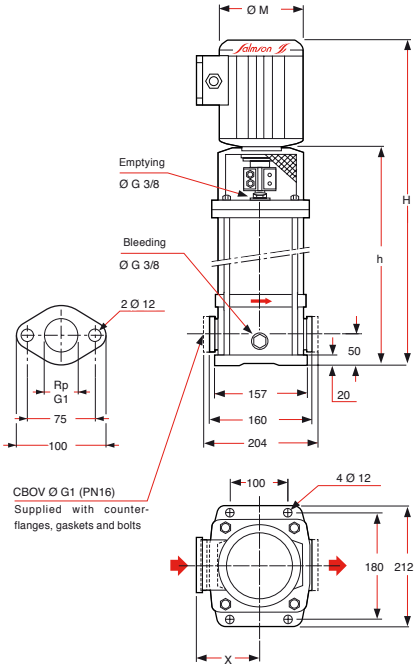

• PN 25 - DN 25

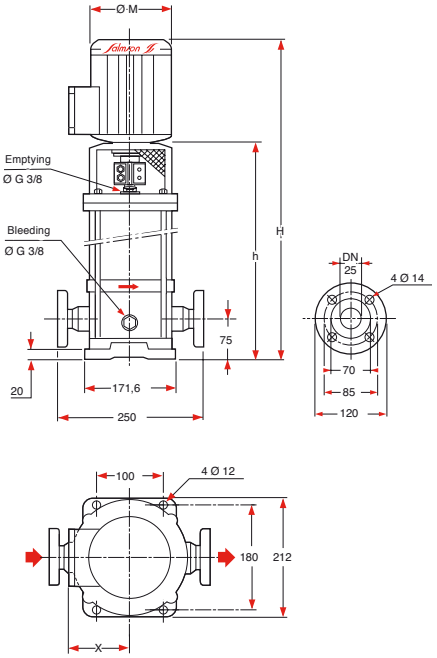

• PN 25 - «VICTAULIC" 1"1/4 CONNECTOR
on request

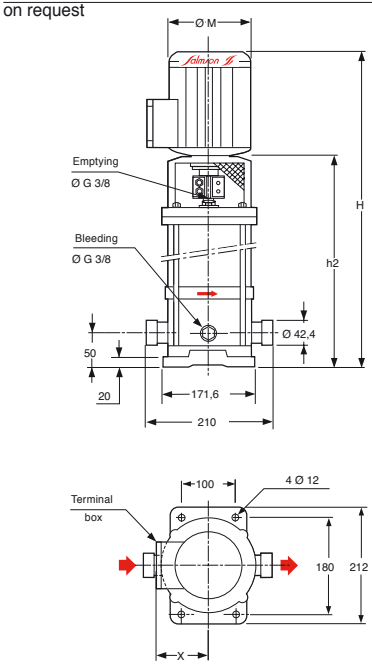

ORDER REFERENCE	MOTOR									PUMP								MASS (kg)			
	P2	Efficiency according to load (%)			Power factor	Speed	Motor attachment	In (A)				PN 16 G1		PN 25 DN 25		PN 25 Victaulic		PN 16 With packaging		PN 25 With packaging	
																		Motor		Motor	
	kW	4/4	3/4	2/4	cos ϕ	rpm		1 x 230 V	3 x 400 V	3 x 230 V	ØM mm	X mm	H mm	h mm	H mm	h mm	H mm	h2 mm	No	With	No	With
MULTI-V 202-M/2	0,37	-	-	-	0,78	2860	14/FT85	2,65	0,93	1,6	150	123	511	297	536	322	–	–	15	23,5	15,3	24,8
MULTI-V 202-T/2	0,37	-	-	-	0,78	2860	14/FT85	2,65	0,93	1,6	150	123	517	297	542	322	516,5	296,5	15	23	15,3	24,3
MULTI-V 203-M/2	0,55	-	-	-	0,76	2860	14/FT85	3,55	1,3	2,25	150	123	511	297	536	322	–	–	15,2	23,5	16,3	24,8
MULTI-V 203-T/2	0,55	-	-	-	0,76	2860	14/FT85	3,55	1,3	2,25	150	123	517	297	542	322	516,5	296,5	15,2	23	16,3	24,3
MULTI-V 204-M/2	0,75	79	78	76	0,82	2850	19/FT100	2,9	1,68	2,9	170	143	571	331	596	356	–	–	15,5	26	17	27,3
MULTI-V 204-T/2	0,75	79	78	76	0,82	2850	19/FT100	2,9	1,62	2,77	170	143	571	331	596	356	570,5	330,5	15,5	25,5	17	26,8
MULTI-V 205-M/2	0,75	79	78	76	0,82	2850	19/FT100	4,85	1,68	2,9	170	143	595	355	620	380	–	–	15,5	26	17,5	27,3
MULTI-V 205-T/2	0,75	79	78	76	0,82	2850	19/FT100	4,85	1,62	2,77	170	143	595	355	620	380	594,5	354,5	15,5	25,5	17,5	26,8
MULTI-V 206-M/2	1,1	80,5	80,5	78	0,82	2850	19/FT100	6,65	2,4	4,2	170	143	619	379	644	404	–	–	17	28,5	18,3	29,8
MULTI-V 206-T/2	1,1	80,5	80,5	78	0,82	2850	19/FT100	6,65	2,4	4,2	170	143	619	379	644	404	618,5	378,5	17	28	18,3	29,3
MULTI-V 207-M/2	1,1	80,5	80,5	78	0,82	2850	19/FT100	6,65	2,4	4,2	170	143	643	403	668	428	–	–	17	28,5	19,5	29,8
MULTI-V 207-T/2	1,1	80,5	80,5	78	0,82	2850	19/FT100	6,65	2,4	4,2	170	143	643	403	668	428	642,5	402,5	17	28	19,5	29,3
MULTI-V 208-M/2	1,5	82	82	80	0,77	2900	24/FT115	9,1	3,2	5,6	190	148	689	437	714	462	–	–	21,5	36	24,6	37,1
MULTI-V 208-T/2	1,5	82	82	80	0,77	2900	24/FT115	9,1	3,2	5,6	190	148	717	437	742	462	716,5	436,5	21,5	35,5	24,6	36,6
MULTI-V 210-M/2	1,5	82	82	80	0,77	2900	24/FT115	9,1	3,2	5,6	190	148	737	485	762	510	–	–	22,5	37	25,8	38,3
MULTI-V 210-T/2	1,5	82	82	80	0,77	2900	24/FT115	9,1	3,2	5,6	190	148	765	485	790	510	764,5	484,5	22,5	36,5	25,8	37,8
MULTI-V 212-T/2	2,2	84	84	82	0,89	2900	24/FT115	–	4,4	7,6	190	148	813	533	838	558	812,5	532,5	23	38	26,3	39,3
MULTI-V 214-T/2	2,2	84	84	82	0,89	2900	24/FT115	–	4,4	7,6	190	148	–	–	886	606	860,5	580,5	–	–	27	43
MULTI-V 217-T/2	3	84,6	85	82,5	0,88	2920	28/FT130	–	5,8	10,1	213	158	–	–	1008	688	983	662,5	–	–	28	49
MULTI-V 220-T/2	4	85,7	85,3	83	0,88	2905	28/FT130	–	7,7	13,3	213	158	–	–	1136	760	1111	734,5	–	–	32	61

MULTI-V

ELECTRICAL AND DIMENSIONAL CHARACTERISTICS MULTI-V 400 - 2 POLE

• PN 16 - DN G1$^{1/4}$

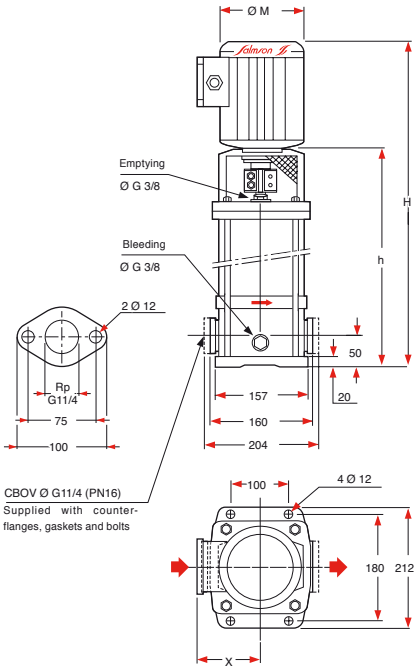

• PN 25 - DN 32

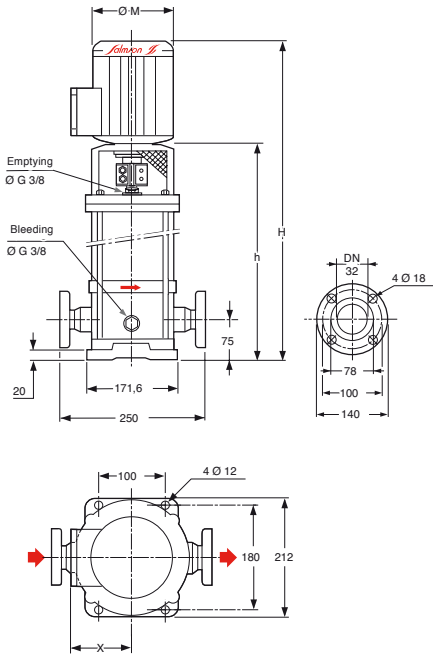

• PN 25 - «VICTAULIC" 1"$^{1/4}$ CONNECTOR

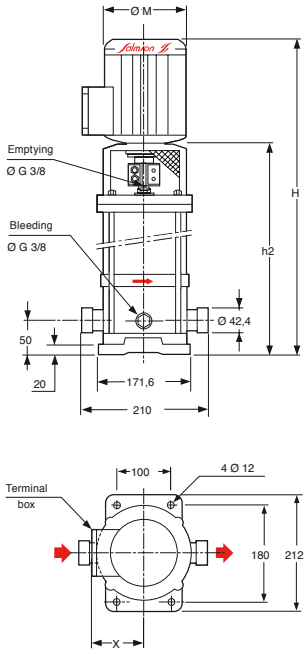

ORDER REFERENCE	MOTOR									PUMP								MASS (kg)			
	P2	Efficiency according to load (%)			Power factor	Speed	Motor attachment	In (A)				PN 16 G1		PN 25 DN 25		PN 25 Victaulic		PN 16 With packaging		PN 25 With packaging	
								1 x	3 x	3 x	ØM	X	H	h	H	h	H	h2	Motor		Motor	
	kW	4/4	3/4	2/4	cos ϕ	rpm		230 V	400 V	230 V	mm	mm	mm	mm	mm	mm	mm	mm	No	With	No	With
MULTI-V 402-M/2	0,55	-	-	-	0,76	2860	14/FT85	3,55	1,3	2,25	150	123	537	297	562	322	–	–	14,5	23	15,8	24,3
MULTI-V 402-T/2	0,55	-	-	-	0,76	2860	14/FT85	3,55	1,3	2,25	150	123	543	297	567	322	535,5	296,5	–	22,5	–	23,8
MULTI-V 403-M/2	0,75	79	78	76	0,82	2850	19/FT100	4,85	1,68	2,9	170	143	547	307	572	332	–	–	15,5	26	16,8	27,3
MULTI-V 403-T/2	0,75	79	78	76	0,82	2850	19/FT100	4,85	1,62	2,77	170	143	547	307	572	332	546,5	306,5	–	25,5	–	26,8
MULTI-V 404-M/2	1,1	80,5	80,5	78	0,82	2850	19/FT100	6,65	2,4	4,2	170	143	571	331	596	356	–	–	16,4	27,9	17,7	29,2
MULTI-V 404-T/2	1,1	80,5	80,5	78	0,82	2850	19/FT100	6,65	2,4	4,2	170	143	571	331	596	356	570,5	330,5	–	27,4	–	28,7
MULTI-V 405-M/2	1,1	80,5	80,5	78	0,82	2850	19/FT100	6,65	2,4	4,2	170	143	595	355	620	380	–	–	17,4	28,9	18,7	30,2
MULTI-V 405-T/2	1,1	80,5	80,5	78	0,82	2850	19/FT100	6,65	2,4	4,2	170	143	595	355	620	380	594,5	354,5	–	28,4	–	29,7
MULTI-V 406-M/2	1,5	82	82	80	0,77	2900	24/FT115	9,1	3,2	5,6	190	148	641	389	666	414	–	–	19	33,5	20,3	34,8
MULTI-V 406-T/2	1,5	82	82	80	0,77	2900	24/FT115	9,1	3,2	5,6	190	148	669	389	694	414	688,5	388,5	–	33	–	34,3
MULTI-V 407-M/2	1,5	82	82	80	0,77	2900	24/FT115	9,1	3,2	5,6	190	148	665	413	690	438	–	–	20,1	35,5	22,3	36,8
MULTI-V 407-T/2	1,5	82	82	80	0,77	2900	24/FT115	9,1	3,2	5,6	190	148	693	413	718	438	692,5	412,5	–	35	–	36,3
MULTI-V 408-T/2	2,2	84	84	82	0,89	2900	24/FT115	–	4,4	7,6	190	148	717	437	742	462	716,5	436,5	20,5	35,5	23,8	36,8
MULTI-V 410-T/2	2,2	84	84	82	0,89	2900	24/FT115	–	4,4	7,6	190	148	765	485	790	510	784,5	484,5	23	39	24,3	40,3
MULTI-V 412-T/2	3	84,6	85	82,5	0,88	2920	28/FT130	–	5,8	10,1	213	158	863	543	888	568	862,5	542,5	25	46	26,3	47,3
MULTI-V 414-T/2	3	84,6	85	82,5	0,88	2920	28/FT130	–	5,8	10,1	213	158	–	–	936	615	910,5	590,5	–	–	30	51
MULTI-V 417-T/2	4	85,7	85,3	83	0,88	2905	28/FT130	–	7,7	13,3	213	158	–	–	1013	688	988	682,5	–	–	31	60
MULTI-V 419-T/2	4	85,7	85,3	83	0,88	2905	28/FT130	–	7,7	13,3	240	170	–	–	1136	760	1111	734,5	–	–	32	74

ELECTRICAL AND DIMENSIONAL CHARACTERISTICS MULTI-V 800 - 2 POLE

• PN 16 - DN G1$^{1/2}$

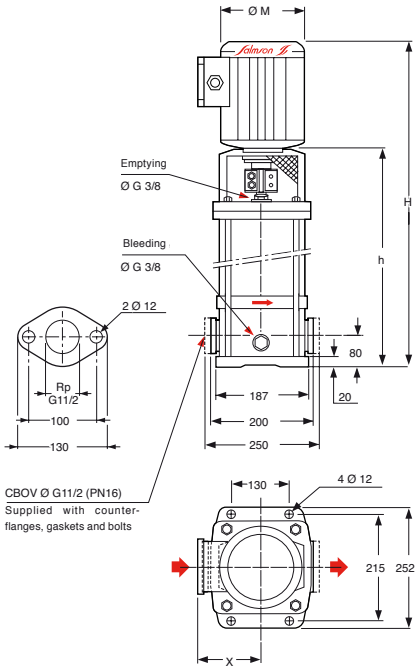

• PN 25 - DN 40

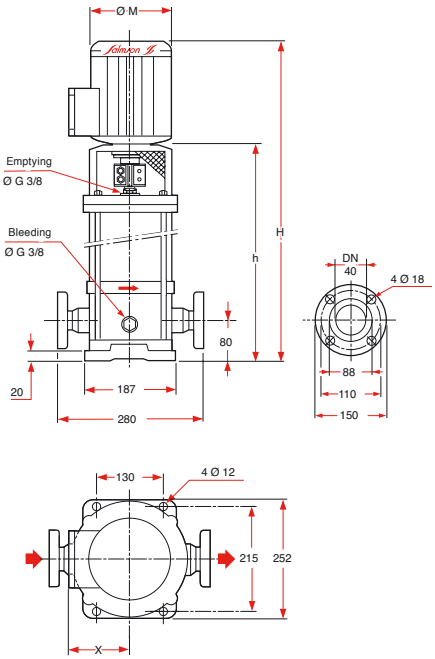

• PN 25 - «VICTAULIC" 2» CONNECTOR

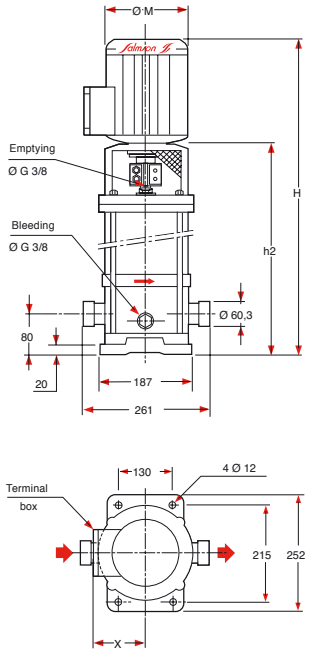

ORDER REFERENCE	MOTEUR										PUMP						MASS (kg)			
	P2	Efficiency according to load (%)			Power factor	Speed	Motor attachment	In (A)					PN 16 G1		PN 25 DN 25		PN 16 With packaging		PN 25 With packaging	
		4/4	3/4	2/4				1 x	3 x	3 x	ØM	X	H	h	H	h	Motor		Motor	
	kW				cos ϕ	rpm		230 V	400 V	230 V	mm	mm	mm	mm	mm	mm	No	With	No	With
MULTI-V 802-M/2	0,75	79	78	76	0,82	2850	19/FT100	4,85	1,68	2,9	170	143	574	334	574	334	19,5	30	20,5	31
MULTI-V 802-T/2	0,75	79	78	76	0,82	2850	19/FT100	4,85	1,62	2,77	170	143	574	334	574	334	19,5	29,5	20,5	30,5
MULTI-V 803-M/2	1,1	80,5	80,5	78	0,82	2850	19/FT100	6,65	2,4	4,2	170	143	604	364	604	364	20,5	32	21,5	33
MULTI-V 803-T/2	1,1	80,5	80,5	78	0,82	2850	19/FT100	6,65	2,4	4,2	170	143	604	364	604	364	20,5	31,5	21,5	32,5
MULTI-V 804-M/2	1,5	82	82	80	0,77	2900	24/FT115	9,1	3,2	5,6	190	148	656	404	656	404	22,5	38	24,5	39
MULTI-V 804-T/2	1,5	82	82	80	0,77	2900	24/FT115	9,1	3,2	5,6	190	148	684	404	684	404	22,5	37,5	24,5	38,5
MULTI-V 805-T/2	2,2	84	84	82	0,89	2900	24/FT115	–	4,4	7,6	190	148	714	434	714	434	23,5	38,5	25,5	39,5
MULTI-V 806-T/2	2,2	84	84	82	0,89	2900	24/FT115	–	4,4	7,6	190	148	744	464	744	464	25.0	41	26	42
MULTI-V 807-T/2	3	84,6	85	82,5	0,88	2920	28/FT130	–	5,8	10,1	213	158	824	504	824	504	26,4	47,4	27,4	48,4
MULTI-V 808-T/2	3	84,6	85	82,5	0,88	2920	28/FT130	–	5,8	10,1	213	158	854	534	854	534	27.0	48,5	28,5	49,5
MULTI-V 810-T/2	4	85,7	85,3	83	0,88	2905	28/FT130	–	7,7	13,3	213	158	919	594	919	594	27,5	50,7	29,1	51,7
MULTI-V 811-T/2	4	85,7	85,3	83	0,88	2905	28/FT130	–	7,7	13,3	240	170	10540	654	10540	654	28,5	520	30	53
MULTI-V 812-T4/2	5,5	88,6	88,8	86,5	0,9	2920	28/FT130	–	10,6	–	220	160	10540	654	10540	654	29,8	61,8	30,8	62,8
MULTI-V 812N-T4/2	5,5	88,6	88,8	86,5	0,9	2920	38/FF265	–	10,2	–	280	194	10730	673	10730	673	31,5	58,5	34,3	66,3
MULTI-V 814-T4/2	5,5	88,6	88,8	86,5	0,9	2920	28/FT130	–	10,6	–	220	160	–	–	11140	714	–	–	36,5	74,8
MULTI-V 814N-T4/2	5,5	88,6	88,8	86,5	0,9	2920	38/FF265	–	10,2	–	280	194	–	–	11330	733	–	–	39	78
MULTI-V 817-T4/2	7,5	88,5	89,9	89,5	0,9	2920	38/FF265	–	14	–	280	194	–	–	12230	823	–	–	40,5	81,5
MULTI-V 819-T4/2	7,5	88,5	89,9	89,5	0,9	2920	38/FF265	–	14	–	280	194	–	–	12830	883	–	–	43,5	84,5

MULTI-V

ELECTRICAL AND DIMENSIONAL CHARACTERISTICS MULTI-V 8000

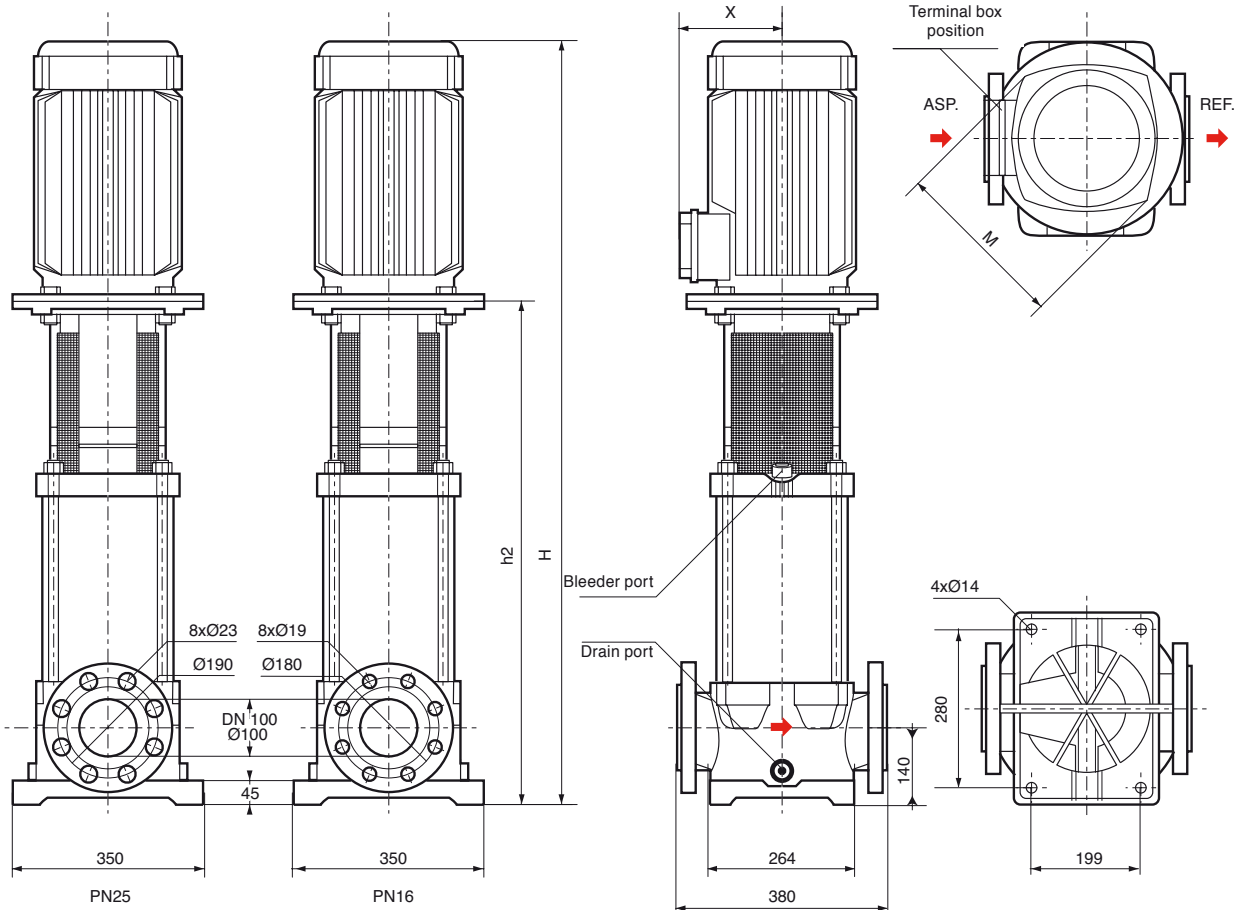

ORDER REFERENCE	MOTOR									PUMP						MASS (kg) With packaging	
	P2	Efficiency according to load (%)			Power factor	Speed	In (A)		Motor attachment	P max		H	h2	ØM	X	With.	Without
	kW	4/4	3/4	2/4	cos ϕ	rpm	3X230	3X400V		bar	bar	mm	mm	mm	mm	Motor	Motor
Multi-V8001/1-T4	4	85,7	85,3	83	0,88	2905	13,3	7,7	28/FT130	16	25	831	539	217	160	86,5	115,5
Multi-V8001-T4	5,5	88,6	88,8	86,5	0,9	2920	–	10,2	28/FT130	16	25	867,5	539	220	160	94,5	133,9
Multi-V8001N-T4	5,5	88,6	88,8	86,5	0,9	2920	–	10,6	38/FF265	16	25	919,5	559	279	182	86,5	119,5
Multi-V8002/2-T4	7,5	88,5	89,9	89,5	0,9	2920	–	14	38/FF265	16	25	1039,5	644	279	182	106,5	183,5
Multi-V8002/1-T4	9	88,9	88,4	86,4	0,89	2945	–	16,3	38/FF265	16	25	1039,5	644	280	182	98,5	158,5
Multi-V8002/1N-T4	11	90,5	90,2	88,8	0,9	2940	–	19,4	42/FF300	16	25	1233	757	325	208	98,5	148,5
Multi-V8002N-T4	11	90,5	90,2	88,8	0,9	2940	–	19,4	42/FF300	16	25	1233	757	325	208	98,5	158,5
Multi-V8003/2-T4	15	90,7	91,1	90,6	0,92	2930	–	25,7	42/FF300	16	25	1318	842	325	208	110	194
Multi-V8003/1-T4	15	90,7	91,1	90,6	0,92	2930	–	25,7	42/FF300	16	25	1318	842	325	208	110	194
Multi-V8003-T4	18,5	91,4	91,8	91,2	0,92	2940	–	31,4	42/FF300	16	25	1337	842	325	235	110	209
Multi-V8004/2-T4	18,5	91,4	91,8	91,2	0,92	2940	–	32,2	42/FF300	16	25	1422	927	325	235	119	236
Multi-V8004/1-T4	22	91,5	91,5	90,4	0,9	2945	–	37,5	42/FF300	16	25	1446	927	370	249	119	213
Multi-V8004-T4	22	91,5	91,5	90,4	0,9	2945	–	37,5	42/FF300	16	25	1446	927	370	249	119	236
Multi-V8005/2-T4	30	92,2	91,6	89,8	0,85	2950	–	52,5	55/FF350	16	25	1611	1012	415	255	126	315
Multi-V8005/1-T4	30	92,2	91,6	89,8	0,85	2950	–	52,5	55/FF350	16	25	1611	1012	415	255	126	315
Multi-V8005-T4	30	92,2	91,6	89,8	0,85	2950	–	52,5	55/FF350	16	25	1611	1012	415	255	126	315
Multi-V8006/2-T4	30	92,2	91,6	89,8	0,85	2950	–	52,5	55/FF350	–	25	1718	1097	415	255	130	341
Multi-V8006/1-T4	37	92,3	92,2	90,8	0,91	2950	–	65	55/FF350	–	25	1696	1097	415	275	130	319
Multi-V8006-T4	37	92,3	92,2	90,8	0,91	2950	–	65	55/FF350	–	25	1718	1097	415	275	130	341
Multi-V8007/2-T4	37	92,3	92,2	90,8	0,91	2950	–	65	55/FF350	–	25	1803	1182	415	275	137	345
Multi-V8007/1-T4	37	92,3	92,2	90,8	0,91	2950	–	65	55/FF350	–	25	1803	1182	415	275	137	345

ELECTRICAL AND DIMENSIONAL CHARACTERISTICS MULTI-V 10000

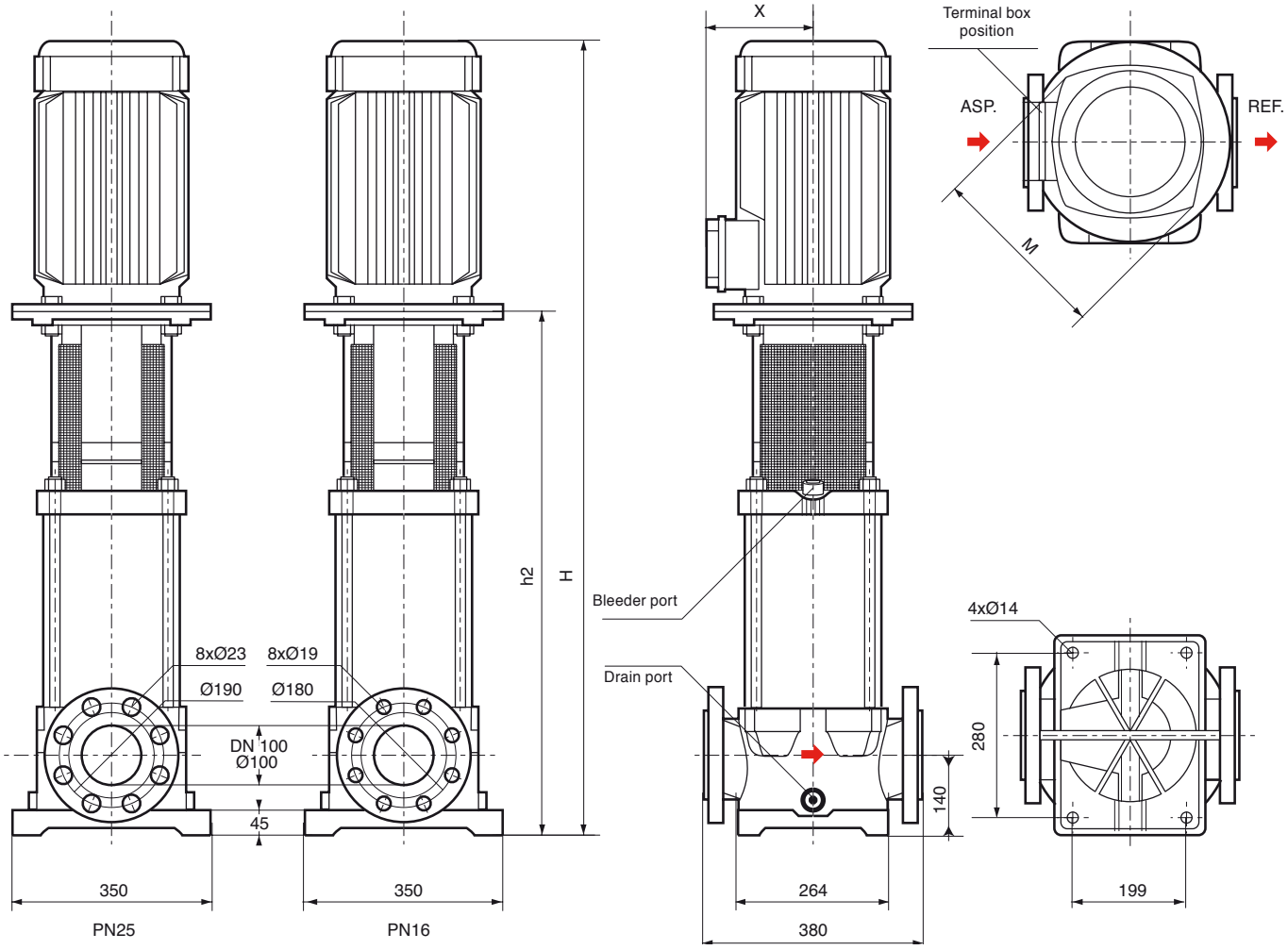

ORDER REFERENCE	MOTOR								PUMP						MASS (kg) With packaging	
	P2	Efficiency according to load (%)			Power factor	Speed	I (A)	Motor attachment	P max		H	h2	ØM	X	With.	Without
	kW	4/4	3/4	2/4	cos ϕ	rpm	400V		bar	bar	mm	mm	mm	mm	Motor	Motor
MULTI-V10001/1-T4	7,5	88,5	89,9	89,5	0,9	2920	14	38/FF265	-	25	932,5	572	279	182	145	95
MULTI-V10001-T4	9	88,9	88,4	86,4	0,89	2945	16,3	38/FF265	16	25	967,5	572	280	182	155	95
MULTI-V10002/2-T4	15	90,7	91,1	90,6	0,92	2930	25,7	42/FF300	16	25	1259	783	325	208	192	108
MULTI-V10002/1-T4	15	90,7	91,1	90,6	0,92	2930	25,7	42/FF300	16	25	1259	783	325	208	192	108
MULTI-V10002-T4	18,5	91,4	91,8	91,2	0,92	2940	31,4	42/FF300	16	25	1278	783	325	235	207	108
MULTI-V10003/2-T4	22	91,5	91,5	90,4	0,9	2945	37,5	48/FF300	16	25	1400	881	370	249	234,5	112,5
MULTI-V10003/1-T4	30	92,2	91,6	89,8	0,85	2950	52,5	55/FF350	16	25	1480	881	415	255	281,5	115,5
MULTI-V10003-T4	30	92,2	91,6	89,8	0,85	2950	52,5	55/FF350	16	25	1480	881	415	255	281,5	115,5
MULTI-V10004/2-T4	30	92,2	91,6	89,8	0,85	2950	52,5	55/FF350	16	25	1578	979	415	255	314,5	125,5
MULTI-V10004/1-T4	37	92,3	92,2	90,8	0,91	2950	65	55/FF350	16	25	1600	979	415	275	336,5	125,5
MULTI-V10004-T4	37	92,3	92,2	90,8	0,91	2950	65	55/FF350	16	25	1600	979	415	275	336,5	125,5
MULTI-V10005/2-T4	45	93,1	92,8	91,3	0,85	2950	82,1	55/FF400	-	25	1704	1077	456	275	371	134
MULTI-V10005/1-T4	45	93,1	92,8	91,3	0,85	2950	82,1	55/FF400	-	25	1704	1077	456	275	371	134
MULTI-V10005-T4	45	93,1	92,8	91,3	0,85	2950	82,1	55/FF400	-	25	1704	1077	456	275	371	134

MULTI-V

RECOMMENDED ACCESSORIES



• Protective slave switch for three-phase motor

• Non-return valve





• Shut-off valve

• Vibration-damping sleeves



• Vibration-damping sleeves



• Bladder tank



• Surge tank



FEATURES

a) Electrical

- IE2 "T" types: 3 ~ 230-400 V - 50 Hz
  or 3 ~ 400 V Δ above 4 kW.
- "M" types: Single-phase 230 V 50 Hz with external capacitor.
- Motors must be protected by a slave switch.
- Stuffing box used for connection to the motor terminal box.

b) Installation

- On solid base using foundation bolts.
- IInstallation of pump in suction mode with compulsory strainer foot valve, or flooded suction mode on storage tank or mains water system with low water protection kit.
- Connection to pump by backflanges: oval or round for the PN 16 series, by round backflanges or «Victaulic» collar for the PN25 series.
- The installation must allow for the protection of the pump against adverse weather conditions and frost (avoid direct exposure to rain or sun).

c) Packaging

• **Pump without motor**, on request
• **PN16 serie**
-With oval flanges: pump supplied with oval cast-iron backflanges, gaskets and bolts,
- With round flanges: pump supplied with gaskets and bolts, without backflanges (optional).

• **PN 25 serie**
- With round flanges: pump supplied with gaskets and bolts, without backflanges (optional).
- "Victaulic" connectors: pump supplied with gaskets and bolts (optional «Victaulic» collars).

d) Maintenance

Replacement of recommended spare parts (•) subject to wear.

OPTIONS AND ACCESSORIES

- By-pass kit for boiler supply
- Shut-off valves
- Non-return valves
- Strainer foot valve
- Vibration-damping sleeves
- PN25 round, screw-on stainless steel backflanges
- Bladder or galvanised tanks
- Surge tanks
- ME low-water protection kit
- Protective slave switch for motor…

OPERATING RANGES

Flow rates of up to :	**8 m³/h**
Manometric heads of up to:	**60 m**
Max. operating pressure :	**10 bar**
Max. temperature :	**+50°C**
Max. suction head: :	**5 m**
DN suction :	**G1 - G1$^{1/4}$**
DN delivery:	**G1**

MULTI V HYDROMINI

BOOSTER PUMPS
Domestic and small-scale collective uses
2 poles - 50 Hz

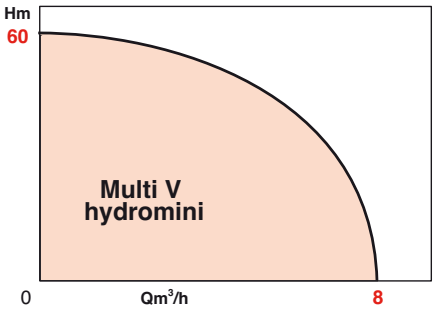

APPLICATIONS

Pressure maintenance for water distribution systems with insufficient or non-existent pressure in the domestic and small-scale collective sectors :

- Water supply and distribution from wells, springs or storage tanks.
- Irrigation - watering.
- Raising the pressure of a weak mains water system (if the total pressure does not exceed 10 bar).

For detached houses, rural homes, small farms, small-scale industries, etc.

ADVANTAGES

- **Fully assembled, wired and preset booster pumps - ready to use.**
- **Easy installation: one electrical connection and two hydraulic connections.**
- **Stainless steel pump: protection from corrosion and extended pump life.**
- **Interchangeable butyl, food-grade bladder tank.**
- **Integrated thermal protection of motor on all models.**
- **User-friendly operation and maintenance at low cost**

Certified ACS



• Multi V hydromini

MULTI V HYDROMINI

DESIGN

Automatic booster pumps, pre-assembled and ready for fitting, equipped with:
- MULTi-H single-phase or three-phase pump (203; 204; 205; 404; 405)
- Tank with an interchangeable bladder (50, 100 and 200 l)
- Filler and bleeder plug
- Drain and priming plug
- Pressure gauge and pressure switch.
- Pump/tank connection hose
- Inflation valve.

HYDROMINI SINGLE-PHASE

- Thermal protection integrated into the winding, automatic resetting after cooling.

We recommend a magnetic protection system (not supplied).

HYDROMINI THREE-PHASE

- Thermal magnetic protection in the protection cabinet, with manual reset.

The setting of on-off pressures on the contact or pressure switch is carried out in the factory.

Standards: EN 60204-1
EN ISO 12100-2
EN 61 000-3-2
EN 61 000-3-3
EN 55 014-1 et 2

INSTALLATION DIAGRAM

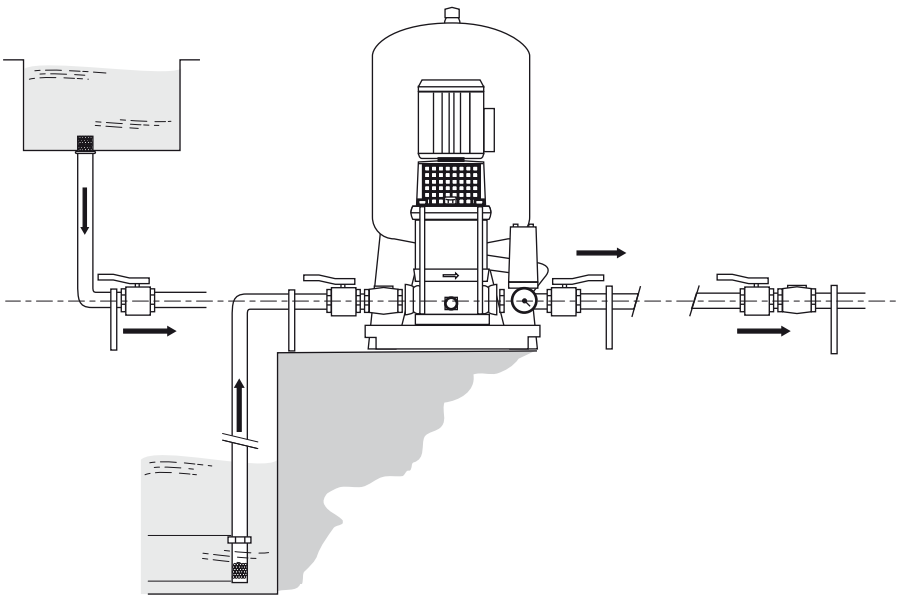

HYDRAULIC PERFORMANCE

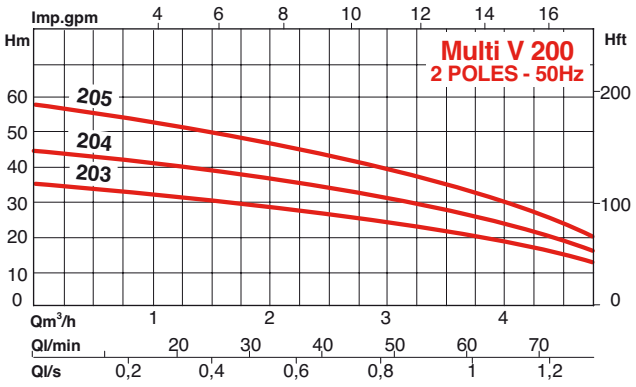

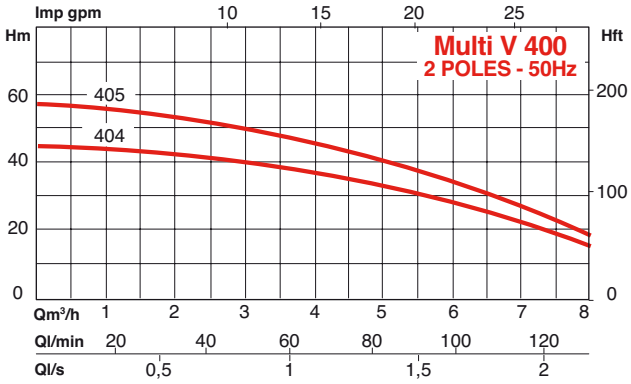

DIMENSIONAL SPECIFICATIONS

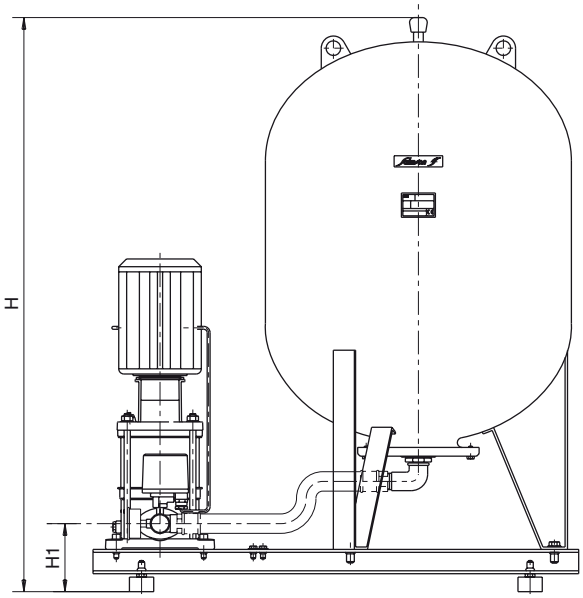

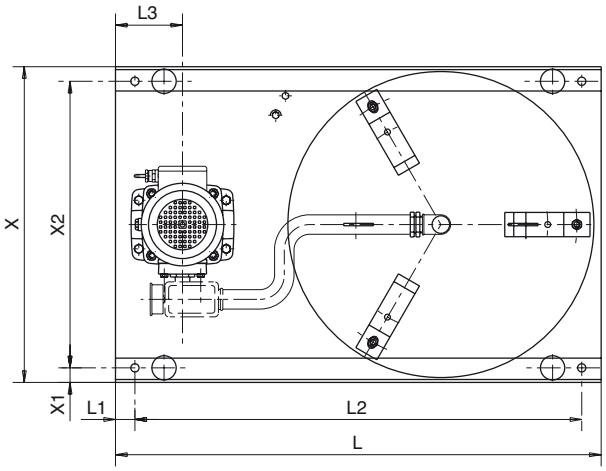

References	Pumps	Tank capacity	L	L1	L2	L3	H	H1	X	X1	X2	Weight
		L	mm	mm	mm	mm	mm	mm	mm	mm	mm	kg
Hydromini with 50-litre tank												
MULTI-V-203-M-V50	MULTI-V-203	50 L	1000	40	920	138	810	140	650	30	590	73,4
MULTI-V-203-T-V50	MULTI-V-203	50 L	1000	40	920	138	810	140	650	30	590	74,2
MULTI-V-204-M-V50	MULTI-V-204	50 L	1000	40	920	138	810	140	650	30	590	76,4
MULTI-V-204-T-V50	MULTI-V-204	50 L	1000	40	920	138	810	140	650	30	590	77,5
MULTI-V-205-M-V50	MULTI-V-205	50 L	1000	40	920	138	810	140	650	30	590	77,0
MULTI-V-205-T-V50	MULTI-V-205	50 L	1000	40	920	138	810	140	650	30	590	78,0
MULTI-V-404-M-V50	MULTI-V-404	50 L	1000	40	920	138	810	140	650	30	590	78,5
MULTI-V-404-T-V50	MULTI-V-404	50 L	1000	40	920	138	810	140	650	30	590	78,3
MULTI-V-405-M-V50	MULTI-V-405	50 L	1000	40	920	138	810	140	650	30	590	79,1
MULTI-V-405-T-V50	MULTI-V-405	50 L	1000	40	920	138	810	140	650	30	590	78,9
Hydromini with 100-litre tank												
MULTI-V-203-M-V100	MULTI-V-203	100 L	1000	40	920	138	970	140	650	30	590	79,3
MULTI-V-203-T-V100	MULTI-V-203	100 L	1000	40	920	138	970	140	650	30	590	80,1
MULTI-V-204-M-V100	MULTI-V-204	100 L	1000	40	920	138	970	140	650	30	590	82,3
MULTI-V-204-T-V100	MULTI-V-204	100 L	1000	40	920	138	970	140	650	30	590	83,4
MULTI-V-205-M-V100	MULTI-V-205	100 L	1000	40	920	138	970	140	650	30	590	82,9
MULTI-V-205-T-V100	MULTI-V-205	100 L	1000	40	920	138	970	140	650	30	590	83,9
MULTI-V-404-M-V100	MULTI-V-404	100 L	1000	40	920	138	970	140	650	30	590	84,4
MULTI-V-404-T-V100	MULTI-V-404	100 L	1000	40	920	138	970	140	650	30	590	84,2
MULTI-V-405-M-V100	MULTI-V-405	100 L	1000	40	920	138	970	140	650	30	590	85,0
MULTI-V-405-T-V100	MULTI-V-405	100 L	1000	40	920	138	970	140	650	30	590	84,8
Hydromini with 200-litre tank												
MULTI-V-203-M-V200	MULTI-V-203	200 L	1000	40	920	138	1160	140	650	30	590	102,1
MULTI-V-203-T-V200	MULTI-V-203	200 L	1000	40	920	138	1160	140	650	30	590	102,9
MULTI-V-204-M-V200	MULTI-V-204	200 L	1000	40	920	138	1160	140	650	30	590	105,1
MULTI-V-204-T-V200	MULTI-V-204	200 L	1000	40	920	138	1160	140	650	30	590	106,2
MULTI-V-205-M-V200	MULTI-V-205	200 L	1000	40	920	138	1160	140	650	30	590	105,7
MULTI-V-205-T-V200	MULTI-V-205	200 L	1000	40	920	138	1160	140	650	30	590	106,7
MULTI-V-404-M-V200	MULTI-V-404	200 L	1000	40	920	138	1160	140	650	30	590	107,2
MULTI-V-404-T-V200	MULTI-V-404	200 L	1000	40	920	138	1160	140	650	30	590	107,0
MULTI-V-405-M-V200	MULTI-V-405	200 L	1000	40	920	138	1160	140	650	30	590	107,8
MULTI-V-405-T-V200	MULTI-V-405	200 L	1000	40	920	138	1160	140	650	30	590	107,6

MULTI V HYDROMINI

ELECTRICAL AND DIMENSIONAL SPECIFICATIONS

References	Pompes	Tension	DN suction (DNS)	DN Discharge (DND)
Hydromini with 50-litre tank		**50 Hz**	1”	1”
MULTI-V-203-M-V50	MULTI-V-203	1~230 V	1”	1”
MULTI-V-203-T-V50	MULTI-V-203	3~230 / 400 V	1”	1”
MULTI-V-204-M-V50	MULTI-V-204	1~230 V	1”	1”
MULTI-V-204-T-V50	MULTI-V-204	3~230 / 400 V	1”	1”
MULTI-V-205-M-V50	MULTI-V-205	1~230 V	1”	1”
MULTI-V-205-T-V50	MULTI-V-205	3~230 / 400 V	1”	1”
MULTI-V-404-M-V50	MULTI-V-404	1~230 V	1”1/4	1”
MULTI-V-404-T-V50	MULTI-V-404	3~230 / 400 V	1”1/4	1”
MULTI-V-405-M-V50	MULTI-V-405	1~230 V	1”1/4	1”
MULTI-V-405-T-V50	MULTI-V-405	3~230 / 400 V	1”1/4	1”
Hydromini with 100-litre tank				
MULTI-V-203-M-V100	MULTI-V-203	1~230 V	1”	1”
MULTI-V-203-T-V100	MULTI-V-203	3~230 / 400 V	1”	1”
MULTI-V-204-M-V100	MULTI-V-204	1~230 V	1”	1”
MULTI-V-204-T-V100	MULTI-V-204	3~230 / 400 V	1”	1”
MULTI-V-205-M-V100	MULTI-V-205	1~230 V	1”	1”
MULTI-V-205-T-V100	MULTI-V-205	3~230 / 400 V	1”	1”
MULTI-V-404-M-V100	MULTI-V-404	1~230 V	1”1/4	1”
MULTI-V-404-T-V100	MULTI-V-404	3~230 / 400 V	1”1/4	1”
MULTI-V-405-M-V100	MULTI-V-405	1~230 V	1”1/4	1”
MULTI-V-405-T-V100	MULTI-V-405	3~230 / 400 V	1”1/4	1”
Hydromini with 200-litre tank				
MULTI-V-203-M-V200	MULTI-V-203	1~230 V	1”	1”
MULTI-V-203-T-V200	MULTI-V-203	3~230 / 400 V	1”	1”
MULTI-V-204-M-V200	MULTI-V-204	1~230 V	1”	1”
MULTI-V-204-T-V200	MULTI-V-204	3~230 / 400 V	1”	1”
MULTI-V-205-M-V200	MULTI-V-205	1~230 V	1”	1”
MULTI-V-205-T-V200	MULTI-V-205	3~230 / 400 V	1”	1”
MULTI-V-404-M-V200	MULTI-V-404	1~230 V	1”1/4	1”
MULTI-V-404-T-V200	MULTI-V-404	3~230 / 400 V	1”1/4	1”
MULTI-V-405-M-V200	MULTI-V-405	1~230 V	1”1/4	1”
MULTI-V-405-T-V200	MULTI-V-405	3~230 / 400 V	1”1/4	1”

TANKS

Capacity :	50 to 200 l
Pressure on:	1,5 to 2 bar
Pressure off	3 to 3,5 bar
DN suction :	G1 - G11/4
DN discharge:	G1

OPTIONS AND ACCESSOIRES

- Strainer foot valve (max. flow section 1 mm
- 1/4 T valve on suction.
- 1/4 T valve on delivery.
- Non-return valve
- Pipe hanger
- Low-water protection kit (connection to mains system).

OPERATING RANGE

Flow rates of up to:	**10 m³/h**
Manometric heads of up to:	**65 m CE**
Max. delivery pressure:	**16 and 25 bar**
Max. intake pressure:	**10 bar**
Temperature range:	**-15° to +120°C****
Max. ambient temperature:	**+ 40°C**
DN (nominal diameter) of ports:	**DN 25 to 32**
Reference MEI*:	**≥ 0,10**

*Minimum Efficiency Index
** according to mechanical seal and gasket

MULTI-VE SINGLE-PHASE

VERTICAL STAINLESS STEEL MULTISTAGE PUMPS with integrated EVS*

* Electronic Variation Speed

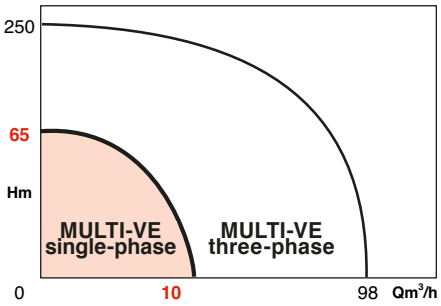

APPLICATIONS

Pumping of clean, non-muddy liquids in the housing and agricultural sectors.
- Supply - Boosting
- Watering - Irrigation
- High-pressure washing
- Heating - Air conditioning
- Water treatment

Incorporation into modular pressure-boosting systems designed for the building market.

Pumped fluids:
- **304 stainless steel range**: clear and non-corrosive liquids (drinking water, glycol water)
- **316L stainless steel range**: corrosive liquids (demineralised seawater, chlorinated water...).

BENEFITS

- **Fewer mechanical and electrical constraints compared to a standard pump:**
- **No more consecutive starting and stopping,**
- **Flexibility of use, smoother operation and less water-hammer,**
- **Adjustment to the installation through the precise setting of speed and pressure.**

- **Quieter operation due to the adaptation of the pump speed to the requirements.**

- **User-friendly installation and use due to easy installation and operation.**

- **Savings:**
- **Optimisation of the complete pump + motor + converter product, guaranteeing energy savings.**
- **A single pump covers a complete range of standard pumps.**
- **A single point of contact and a single supplier for a complete automatic system.**

Certified ACS

EVS



• MULTI-VE 403 SINGLE-PHASE
- Round flanges



• MULTI-VE 403 SINGLE-PHASE
- Oval flanges

MULTI-VE SINGLE-PHASE

DESIGN

• Hydraulic part

- Stainless steel impellers and stage housing.
- Centrifugal Multi-stage.
- Vertical axis, in-line suction/delivery ports in the lower part.
- Housing equipped with oval flanges for PN 16 and round flanges or Victaulic connectors for PN 25.
- Lower shaft guide bearing above the second stage.
- Standardised mechanical seal ensures leak-tightness of the shaft passage.

• Motor part

Closed with flange and standardised shaft end for vertical operation, equipped with EVS. Motor connected to pump by coupling with a safety guard.

Single-phase winding :	230 V ± 10%, 50 Hz
	220 V ± 6%, 60 Hz
	240 V ± 6%, 60 Hz
Frequency:	50 and 60 Hz
Insulation class:	155 (F)
Protection class:	IP55

BASIC CONSTRUCTION

Main parts	Material	
	Non-corrosive liquids	Corrosive liquids
Pump sole plate	EN GJL 250 cast iron	
Suction housing.ref.	304 S.Steel	316L S.Steel
Motor lantern ring mount	EN GJL 250 cast iron	
Impellers	304 S.Steel	316L S.Steel
Cells (stage housing)	304 S.Steel	316L S.Steel
External pipe sleeve	304 S.Steel	316L S.Steel
Pump shaft	316L S.Steel	316L S.Steel
Intermediate bearing	Tungsten carbide	
Mechanical seal	Silicon carbide/Carbon	
O-rings	EPDM*	VITON**
Plugs	316L S.Steel	316L S.Steel

* T° 120°C — **T°90°C

316L stainless steel pumps only exist on PN 25 housings with round flanges and "Victaulic" connectors.

NB: 304 1.(XCrNi 18-10) or 316 L 1.4404 (x2CrNiMo) stainless steel - recommended materials offering excellent corrosion resistance. Clean and clear liquids with no fibres and low sand/silica content (max. concentration 40g/m3).

IDENTIFICATION

MULTi-VE-402-OSE-M2/2/OEM/XX/A

Pump family

Nominal flowrate in m^3/h

Number of stages

O: PN16 flanges
F: PN25 flanges
R: Victaulic connector

G: Cast iron pump housing
GJL 250 + 304 stainless steel hydraulics
S: 304L stainless steel pump housing
+ 304 stainless steel hydraulics
X: 316L stainless steel pump housing
+ 316 stainless steel hydraulics

E: EPDM O-rings
V: Viton O-rings

Nothing: without motor
M2: 1~phase, mode 2
M13:1~phase, modes 1 and 3

2 = 2 Pole

Original equipement manufacturer

Technical definition code

A: Version index

PRINCIPLE

Electronic Speed Variation is a feature of the asynchronous motors on MULTi-VE centrifugal pumps.
The aim is to regulate the speed of the alternating current motor by converting the voltage and frequency of the 220 - 240 V single-phase system at 50 or 60 Hz, into a system of three-phase voltages of variable frequencies and amplitudes.
The frequency converter can thus be used to control the speed of the motor.
This simultaneous action concerning frequency and voltage is carried out via two main elements:

- A diode rectifier
- A Pulse-Width Modulated (PWM) inverter

The rectifier is a diode bridge. The alternating voltage that crosses this diode bridge is converted into a "rectified" current. At this stage, in order to improve the quality of the voltage at the rectifier outlet, a set of capacitances and induction coils eliminates the slight residual waviness that emerges from the rectifier. We thus obtain a smoothed direct voltage referred to as the "DC bus".
Following this change, the inverter will permanently regulate the voltage at the variable voltage regulator outlet in order to optimise the magnetisation of the motor.
The fixed voltage at the inverter input is converted into variable voltage via transistors. This principle is called Pulse Width Modulation (PWM).

These transistors are controlled by the microcontroller, which may or may not activate them, thus allowing for the variation of frequency at the variable voltage regulator outlet.
The transistors (IGTB: Insulated Gate Bipolar Transistors) thus operate in switching mode and act as switches to convert direct voltage into variable voltage. The activation or switching frequency of the IGBTs allows for the creation of variable magnitudes of voltage and frequency. This frequency must be high in order to eliminate the noise generated by the magnetisation.

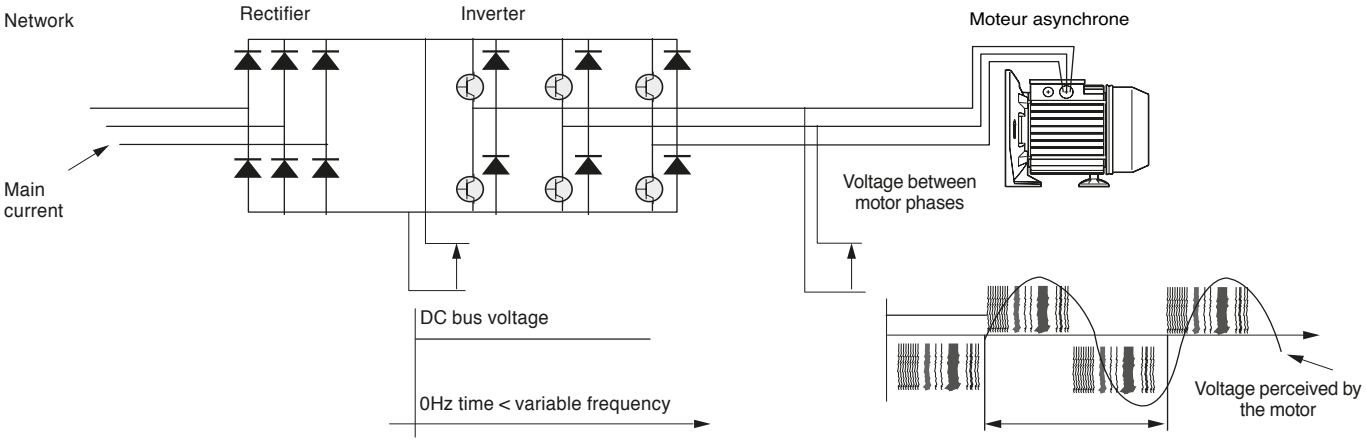

MULTI-VE SINGLE-PHASE

PRINCIPLE

3 operating modes are possible depending on the application and the requirements through a choice of 2 product references (M13 and M2).

• Mode 1 (M13)

Mode 1: The pump is installed like a MULTi-V standard pump, but its speed can be regulated manually, which allows it to operate over a range of flow rate/pressure curves.

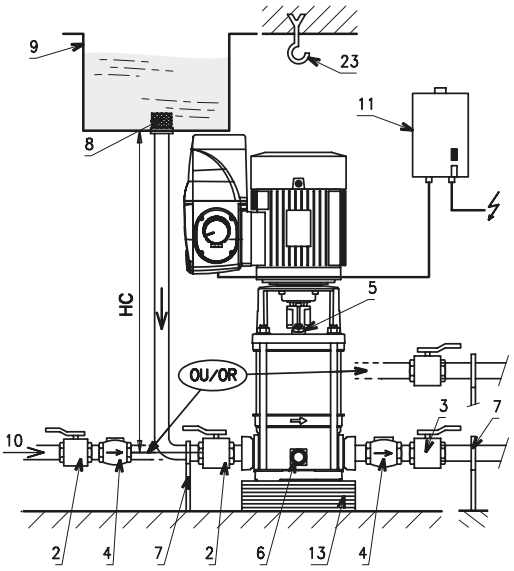

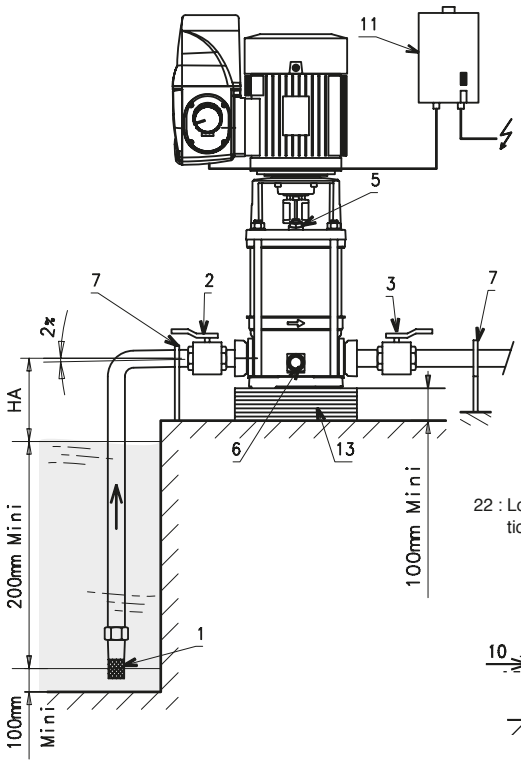

KEYS
1 - Strainer foot valve
2 - Pump suction valve
3 - Pump delivery valve
4 - Non-return valve
5 - Filling/ bleeder plug
6 - Emptying/priming plug
7 - Pipe mounts or collar
8 - Strainer
9 - Storage tank
10 - Mains water supply
11 - Switch/Isolating switch
13 - Concrete base block
14 - Pressure sensor kit
15 - Tank
16 - Tank shut-off valve
22 - Low-water protection
23 - Hoisting hook
SH = Suction head

22 : Low-water protection (optional)

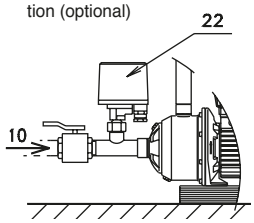

• Mode 3 (M13)

Mode 3: frequency is varied by an external control. The powering on, stoppage and rotation speed of the pump are controlled by a 0-10 V or 4-20m A input signal.

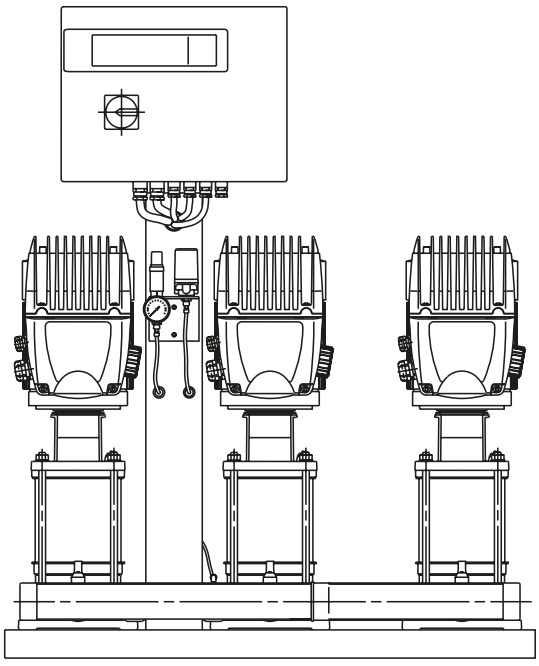

PRINCIPLE

3 operating modes are possible depending on the application and the requirements through a choice of 2 product references (M13 and M2).

• Mode 2 (M2)

Mode 2: Pump mode alone for pressure regulation. The pump is installed with its pressure sensor which can be attached to the pump or to the delivery pipe.
The set point pressure value is regulated when the module is installed using the potentiometer on the side.

Operation: When the actual pressure, measured by the sensor, drops below the setpoint pressure, the pump starts up and regulates its speed in order to achieve the setpoint pressure. The pump stops automatically when it detects a zero flow rate and if it is equipped with a low-water protection system (optional).

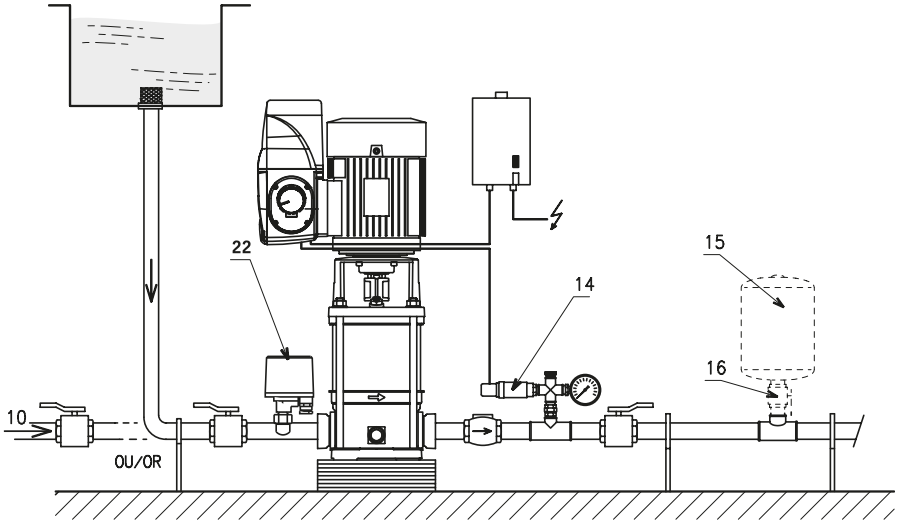

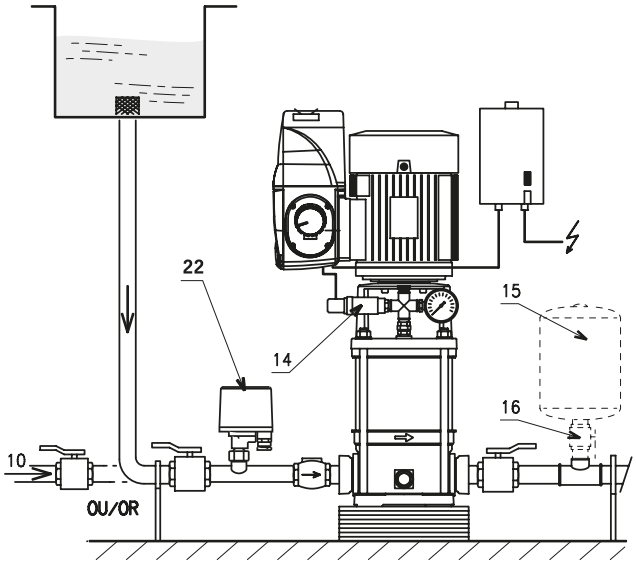

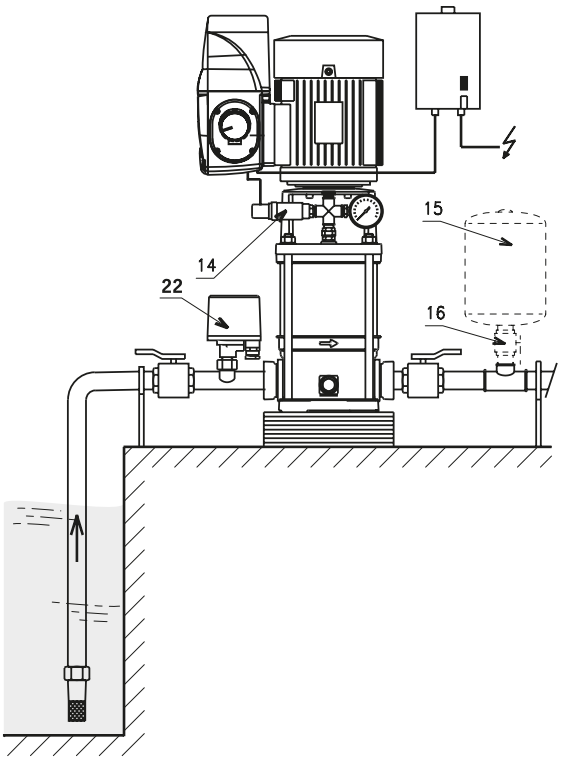

KEYS
1 - Strainer foot valve
2 - Pump suction valve
3 - Pump delivery valve
4 - Non-return valve
5 - Filling/ bleeder plug
6 - Emptying/priming plug
7 - Pipe mounts or collar
8 - Strainer
9 - Storage tank
10 - Mains water supply
11 - Switch/Isolating switch
13 - Concrete base block
14 - Pressure sensor kit
15 - Tank
16 - Tank shut-off valve
22 - Low-water protection
23 - Hoisting hook
SH= Suction head

MULTI-VE SINGLE-PHASE

MANAGEMENT OF THE INTEGRATED EVS SYSTEM

• **Display**

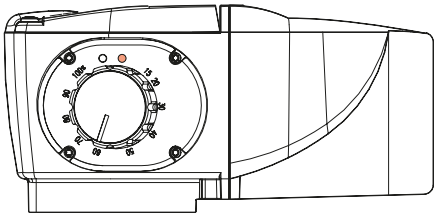

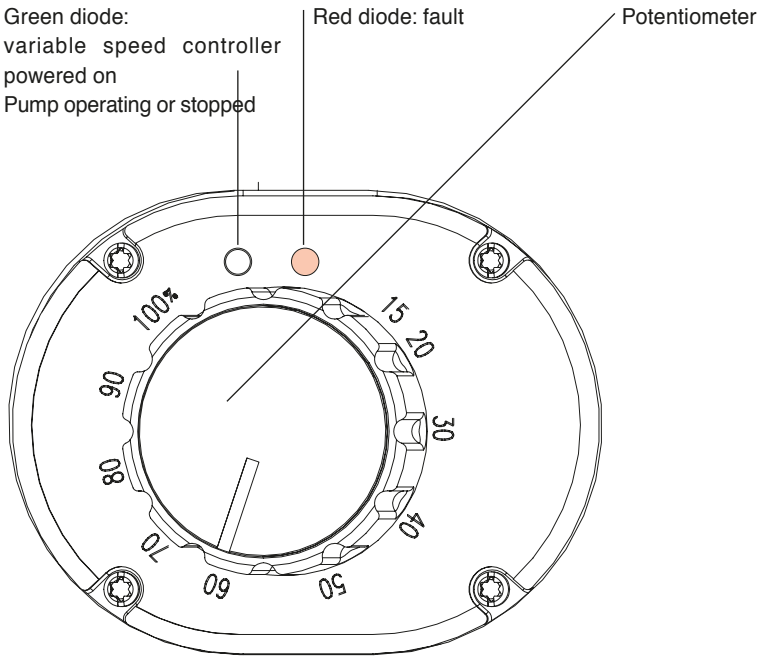

Maintenance diagnosis

The analysis is carried out according to parameters such as:

- Over/Undervoltage,
- Sensor supply fault or severed cable,
- Short-circuit,
- Overload.

The pump fault is then signalled by the red diode.

• **Control laws in Mode 2**

4-20 mA sensor

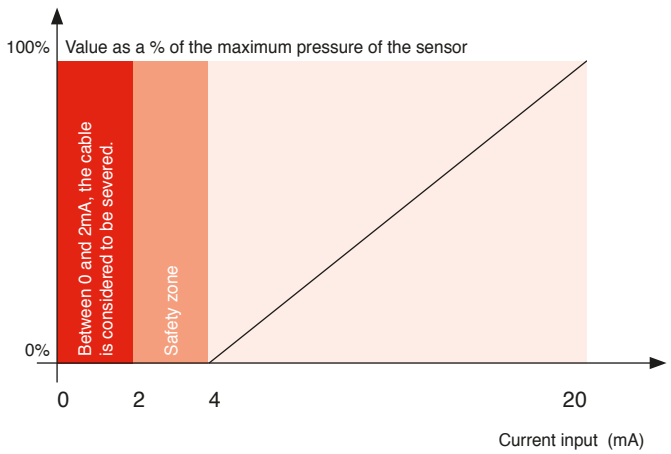

0-10 V sensor

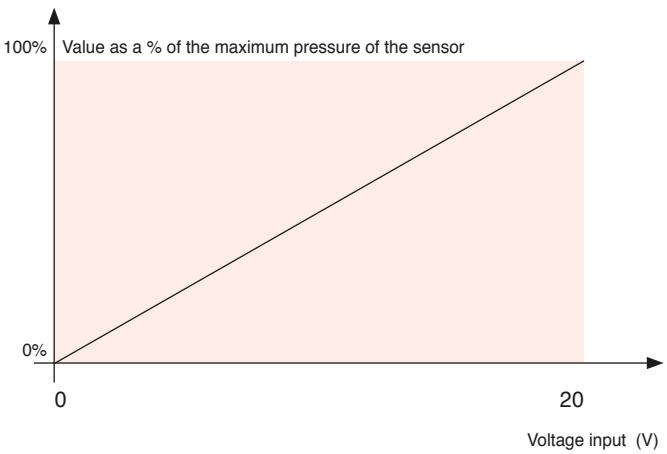

PUMP PERFORMANCE

PUMP CALCULATION TIPS

A pump is represented by a network of curves corresponding to different frequencies (Hz) and thus to different rotation speeds of the motor. The frequency is expressed as a %.

An EVS pump is represented by a network of curves, with the understanding that all of the curves between ❶ and ❻ 6 are covered.

With speed variation, the power consumption is adapted to the required Q/H, thus resulting in significant energy savings.

The NPSH of a MULTI-VE pump varies according to the curve on which it is situated. Therefore, it is important to know the desired setpoint pressure, especially for pump installations in suction mode in wells, and to take account of the NPSH of the pump at max. frequency, i.e. at 100%. The max. suction head for this type of pump must not exceed 1 metre.

Here, the benefit of speed variation is once again demonstrated in terms of efficiency, as there is optimal efficiency over a wide range of flow rates, compared to a fixed-speed pump.

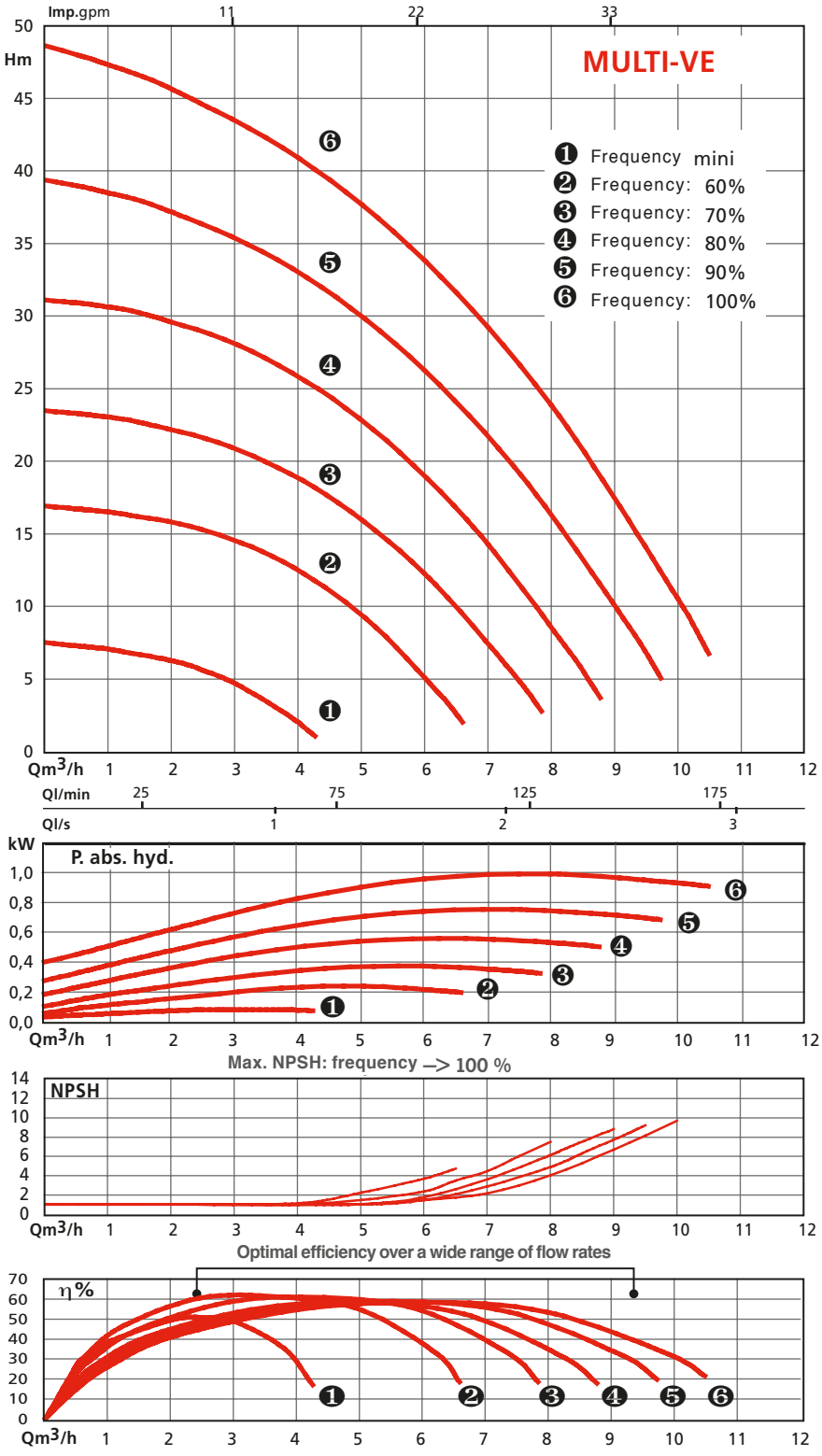

MULTI-VE SINGLE-PHASE

HYDRAULIC PERFORMANCE – SINGLE-PHASE MULTI-VE 204 AND 403

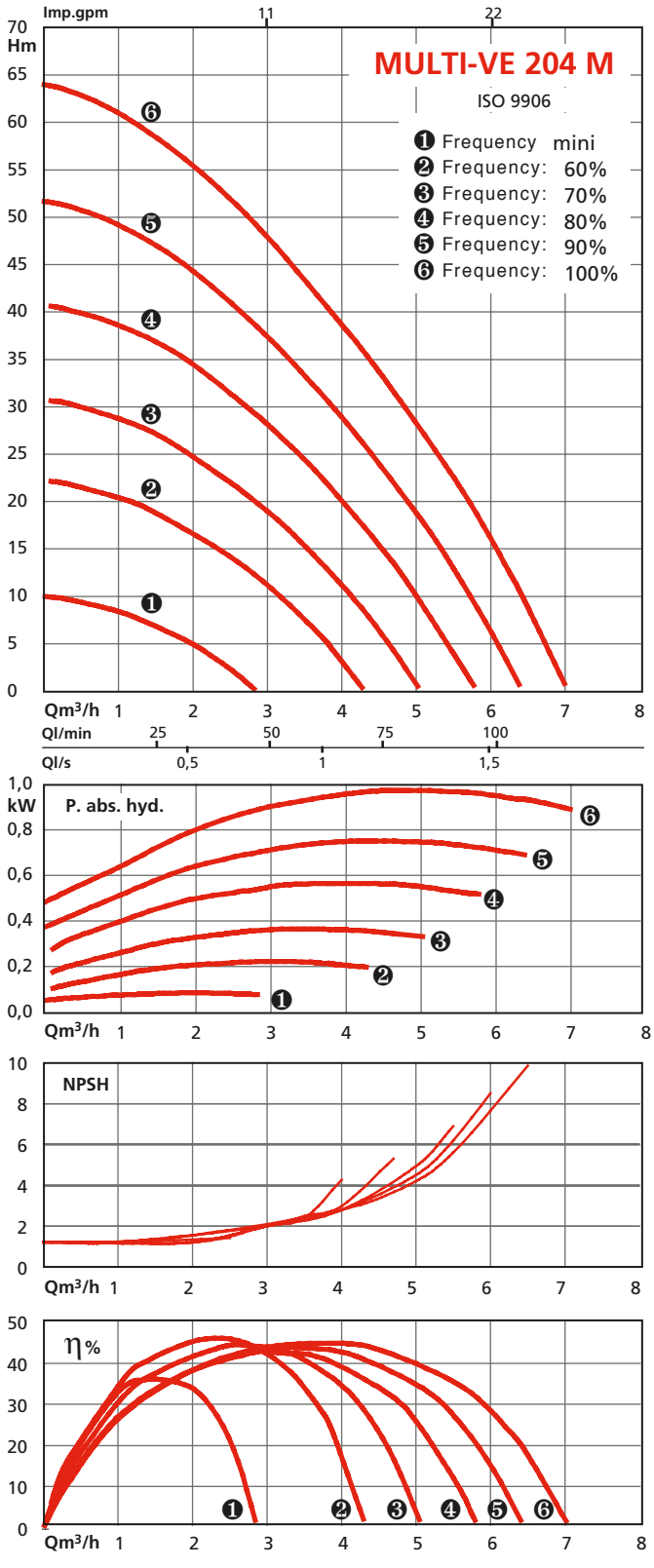

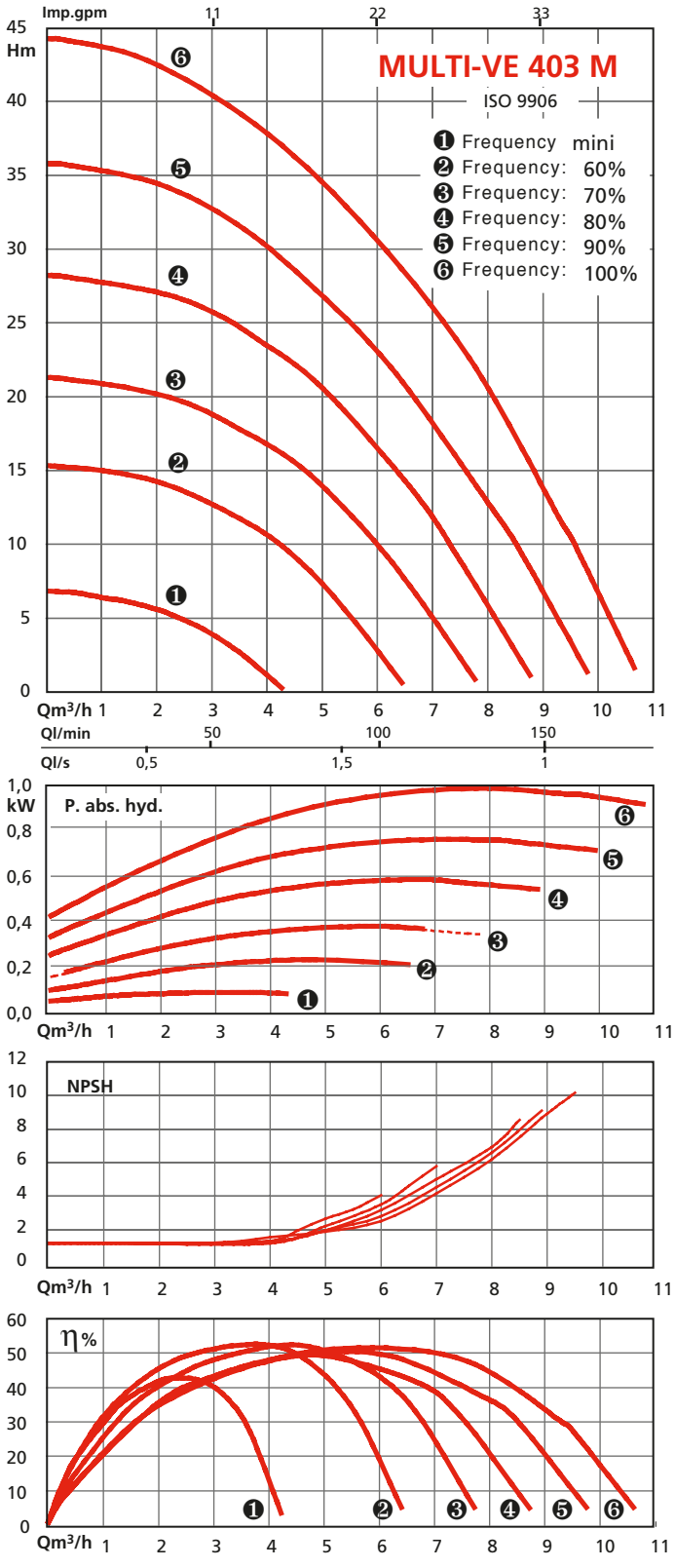

MULTI-VE SINGLE-PHASE

ELECTRICAL AND DIMENSIONAL SPECIFICATIONS - SINGLE-PHASE MULTI-VE 204

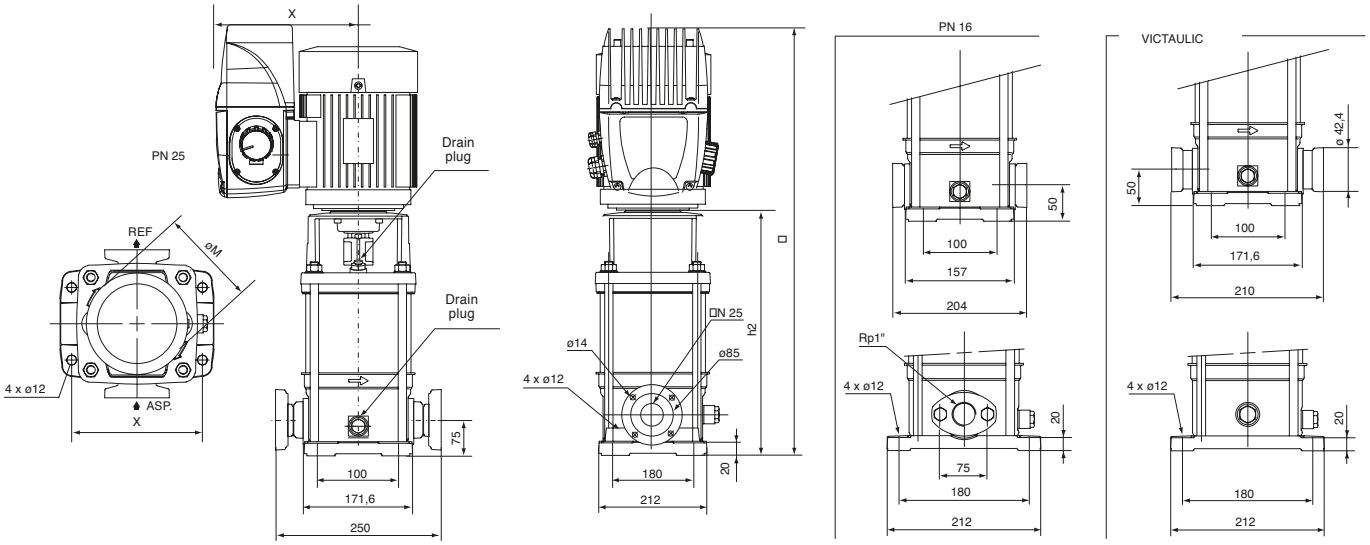

MULTi-VE Single-phase

					Motor								Pump						
Order	**PN**	**P2**	**Casing**	**Flange**	**Freq.**	**T.**	**In**	**Freq.**	**T.**	**In**	**Freq.**	**T.**	**In.**	**H**	**h2**	**ØM**	**X**	**Mass in kg**	
Reference		kW		motor	Hz	V	A	Hz	V	A	Hz	V	A	mm	mm	mm	mm	packaging	
																		Without	With
MULTi-VE 204…	16	1,1	80	FT100	50	230	12,4	60	220	12,7	60	240	12,1	597,5	330,5	170	205	25,5	30
MULTi-VE 204…	25	1,1	80	FT100	50	230	12,4	60	220	12,7	60	240	12,1	622,5	355,5	170	205	28,5	33
MULTi-VE 204…	Victaulic	1,1	80	FT100	50	230	12,4	60	220	12,7	60	240	12,1	597,5	330,5	170	205	28,5	33

ELECTRICAL AND DIMENSIONAL SPECIFICATIONS - SINGLE-PHASE MULTI-VE 403

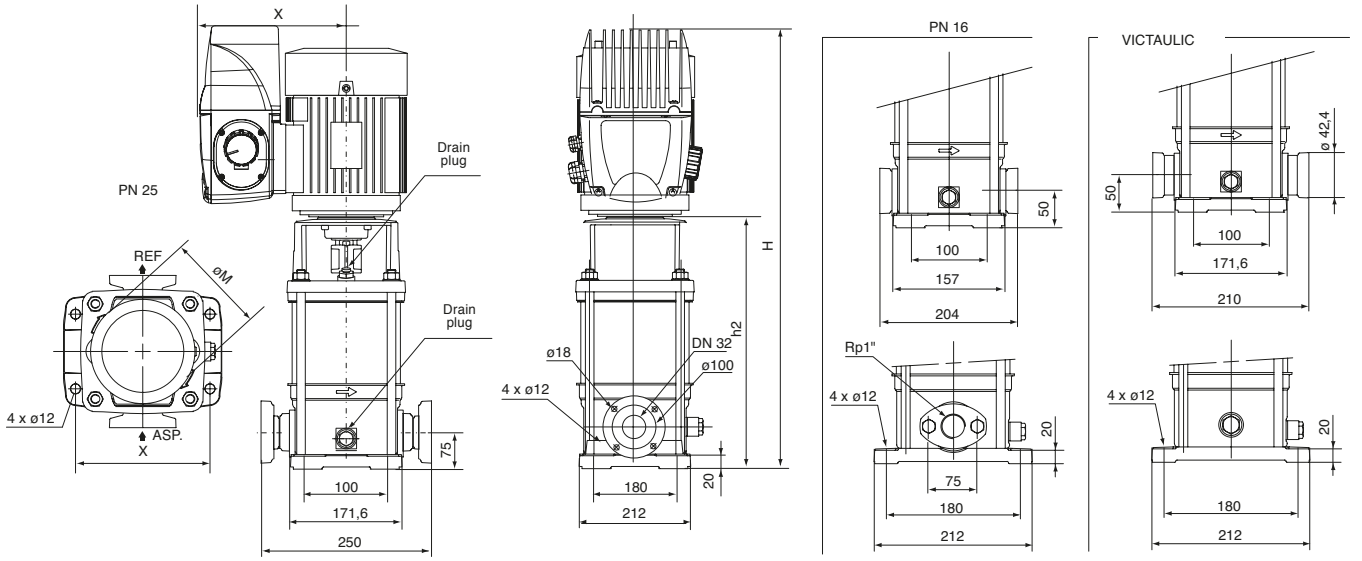

MULTi-VE Single-phase

					Motor								Pump						
Order	**PN**	**P2**	**Casing**	**Flange**	**Freq.**	**T.**	**In**	**Freq.**	**T.**	**In**	**Freq.**	**T.**	**In.**	**H**	**h2**	**ØM**	**X**	**Mass en kg**	
Reference		kW		motor	Hz	V	A	Hz	V	A	Hz	V	A	mm	mm	mm	mm	packaging	
																		Without	With
MULTi-VE 403...	16	1,1	80	FT100	50	230	12,4	60	220	12,7	60	240	12,1	573,5	306,5	170	205	25	29,5
MULTi-VE 403...	25	1,1	80	FT100	50	230	12,4	60	220	12,7	60	240	12,1	598,5	331,5	170	205	26	30,5
MULTi-VE 403...	Victaulic	1,1	80	FT100	50	230	12,4	60	220	12,7	60	240	12,1	598,5	331,5	170	205	26	30,5

MULTI-VE SINGLE-PHASE

PRESSURE SENSOR KIT: MOUNTING ACCESSORY

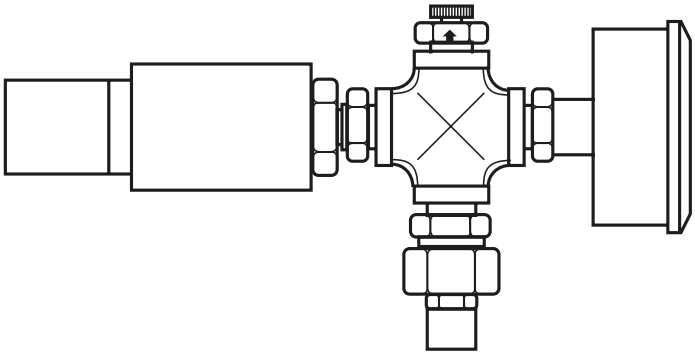

Sensor kit	6 bar	Order reference	Item reference
	MULTi-VE 403	CAPTPRESS 6B	4048063
Sensor kit	10 bar		
	MULTi-VE 204	CAPTPRESS 10B	4048064

a) Electrical

All single-phase types:
- 230 V ± 10% /50 Hz
- 220 V ± 6% /60 Hz
- 240 V ± 6% /60 Hz

b) Fitting

- Installation in an easily accessible place. For heavy pumps, provide a hoisting hook on the pump axis to allow for easy dismantling.
- Mounting on a > 10 cm tall concrete block, fixing by anchor bolts.
- Pump axis always horizontal.

Connection to the system using "Victaulic" quick connectors or backflanges.

c) Packaging

- Oval-flanged pumps: supplied with cast-iron oval back flanges for screw-on pipe, gaskets and bolts.
- Round-flanged pumps: supplied with gaskets and bolts, without backflanges (optional).
- Pumps with quick connectors for “Victaulic” collars: supplied without collars (optional).

RECOMMENDED ACCESSORIES

- Shut-off valves.
- Screw-on or weld-on back flanges (steel or stainless steel).
- “Victaulic”-type quick connectors.
- Vibration-damping sleeves.
- Bladder or galvanised tank.
- Surge tank.
- Non-return valves (with cone or flap, with spring if operating in Mode 2).
- Low-water protection kit (Modes 1, 2 and 3).
- Regulating pressure sensor kit.

OPERATING RANGES

Flow rates of up to:	**140 m³/h**
Manometric heads of up to:	**250 mCE**
Max. delivery pressure:	**16 and 25 bar**
Max. intake pressure:	**10 bar**
Temperature range:	**- 15° to +120°C****
Max. ambient temperature:	**+ 50°C**
DN (nominal diameter) of holes:	**25 to 80**
Reference MEI*:	**≥ 0,40**

*Minimum Efficiency Index

** according to mechanical seal and gasket

MULTI VE THREE-PHASE

VERTICAL STAINLESS STEEL MULTISTAGE PUMPS with integral EVS*

*** Electronic Variation Speed**

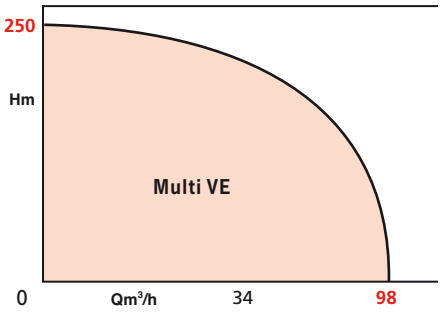

APPLICATIONS

Pumping of clean, non-muddy liquids in the housing, agricultural and industrial sectors:
- Supply - Boosting.
- Watering - Irrigation.
- High-pressure washing.
- Heating - Air conditioning.
- Water treatment .

Incorporation into modular pressure-boosting systems designed for:
- Hotels and,
- hospitals.

Pumped fluids:
- **304 range:** clear and non-corrosive liquids (drinking water, glycol water)
- **316L range:** corrosive liquids (demineralised seawater, chlorinated water...)

BENEFITS

- **Fewer mechanical and electrical constraints compared to a standard pump:**
- **No more consecutive starting and stopping,**
- **Flexibility of use, with smoother operation and less water hammer,**
- **Reduced starter current,**
- **Adjustment to the installation through the precise setting of speed and pressure.**
- **Automatic diagnoses for easier maintenance.**
- **Quieter operation due to the adaptation of the pump speed to the requirements.**
- **User-friendly installation and use due to easy installation and operation.**
- **The new variable speed control unit with rotating knob and LCD screen facilitates the setting of different operating modes.**
- **Savings :**
- **Optimisation of the complete pump + motor + converter product, guaranteeing energy savings.**
- **A single pump covers a complete range of standard pumps.**
- **A single point of contact and a single supplier for a complete automatic system.**
- **More compact booster pump due to the frequency converter being built into the pump.**



Certified ACS

EVS

MULTI VE THREE-PHASE

DESIGN

• Hydraulic part

All stainless steel - Centrifugal.
Multi-stage: 2 to 14 stages.
Vertical axis, in-line suction/delivery in the lower part. Housing equipped with:
- round or oval flanges in PN 16
- round flanges or ports - Victaulic connectors in PN 25.

Lower guide bearing above the second stage.
Standardised mechanical seal ensures leak-tightness of shaft passage.

• Motor

Closed with flange and standardised shaft end for vertical operation, equipped with EVS.
Motor connected to pump by coupling with a safety guard.

Winding:	380 to 400 V 3 ~
Frequency:	50 and 60 Hz
Insulation class:	155 (F)
Protection class:	IP54

BASIC CONSTRUCTION

Range	304 stainless steel 2/4/8/80/100	316L stainless steel 2/4/8/80/100
Main parts	**Material**	
	non-corrosive liquids	corrosive liquids
Pump sole plate	EN GJL 250 cast iron	
Suction housing ref	ENGJL 250 Cast iron (2/4/8 in 304 stainless steel)	316L stainless steel
Motor lantern ring mount	EN GJL 250 cast iron	
Impellers	304 stainless steel	316L stainless steel
Cells (stage housing)	304 stainless steel	316L stainless steel
External pipe sleeve	304 stainless steel	316L stainless steel
Pump shaft	316L stainless steel	316L stainless steel
Intermediate bearing	Tungsten carbide	
Mechanical seal	Silicon carbide/Carbon	
O-rings	EPDM*	Viton**
Plugs	316L stainless steel	316L stainless steel

* T° 120°C — **T°90°C

316L stainless steel pumps only exist on PN 25 housings with round flanges and «Victaulic» connectors.

NB: 304 (X5CrNi18-10) or 316 L (X2CrNiMo17.12.2) stainless steel - recommended materials offering excellent corrosion resistance. Clean and clear liquids with no fibres and low sand/silica content (max. concentration 40g/m3).

ELECTRONIC SPEED VARIATION

Description



Version 1,1 à 4kW

1. Attachment of cover
2. Control button
3. Infra-red communication window
4. Control connectors
5. Display
6. Switches for locking of parameters and setpoint value
7. Power terminal block
8. Interface for IF modules
9. Relays for SBM unavailability and SSM fault transmissions

Features

Automatic modes
- Manually or externally controlled speed.
- Constant pressure.
- PDI control.

Manual settings
- Constant pressure setpoint setting.
- Rotation speed setting (speed mode).
- Operating mode setting.
- On/off pump setting
- Configuration of all operating parameters.
- Fault clearance.

Safety
- Full motor protection with integrated electronic tripping device.
- Access locking.

Communication

External control functions
- «Priority Off» control input.
- 0-10 V, 0–20 mA analog input for setting mode (DDC) and remote setting of the set-point value.
- 2-10 V, 4–20 mA analog input for setting mode (DDC) and remote setting of the set-point value.
- 0–10 V analog input for the actual value signal of the pressure sensor.
- 2–10 V, 0-20 mA and 4–20 mA analog input for the actual value signal of the pressure sensor.

Signalling and display
- Centralised SSM fault transmission.
- Centralised SBM operation transmission.

Data exchange
- Location for Salmson IF modules (Modbus, BACnet, CAN, PLR, LON) for connection to the centralised technical management system.

IDENTIFICATION

MULTi-VE 4 02 - 7,5 - OSE - T4 / 2 - 2G

Pump family

Nominal flowrate in m^3/h (at 50 Hz/2 pole)

Number of stages

7,5 or 11: Power for MVIE 3203 only

O = PN16 flanges
F = PN25 flanges
R = Victaulic connector

G = GJL-250 cast iron pump housing + 304 stainless steel hydraulics
S = 304 stainless steel pump housing + 304 stainless steel hydraulics
X = 316L stainless steel pump housing + 316L stainless steel hydraulics

E = O-rings: EPDM (WRAS/KTW)
V = O-rings: VITON

Nothing: without motor
T4 = 400V three-phase
M13 = Mode 1-3 Single-phase
M2 = Mode 2 Single-phase

2 = 2 Pole

2nd generation variable speed controller

MULTI VE THREE-PHASE

PRINCIPLE

• «Speed control» mode

• Display
- Speed on screen



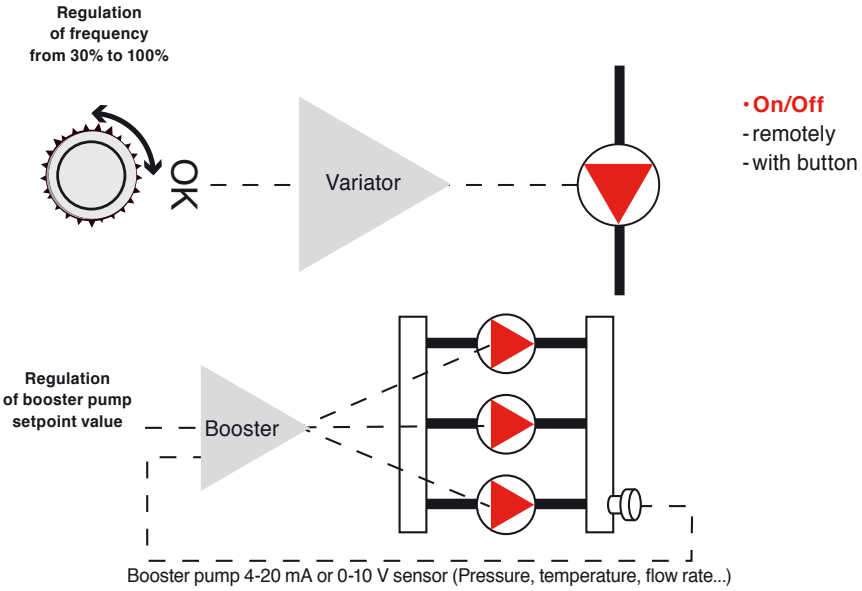

• On/Off
- remotely
- with button

• «Constant pressure» mode

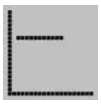

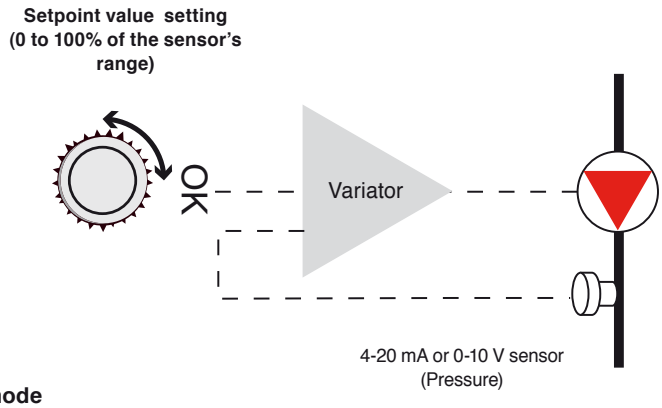

• Display
- Display of pressure
  in pressure setting

• On/Off
- remotely
- with button

• Pressure adjustment
- Pressure adjustment using buttons
  OR
- Pressure adjustment via an external signal

• «PDI control» mode

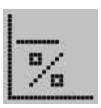

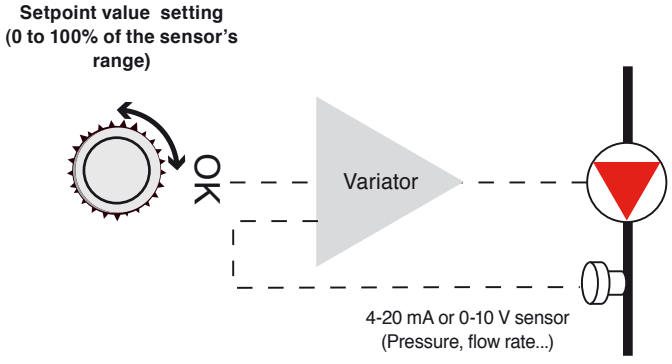

• Display
- % display for the other types of regulation

• On/Off
- remotely
- with button

• Other types of regulation
- possible to adjust the PDI corrector
- choice of type of regulation
  (flow rate, temperature, ...)

PUMP PERFORMANCE

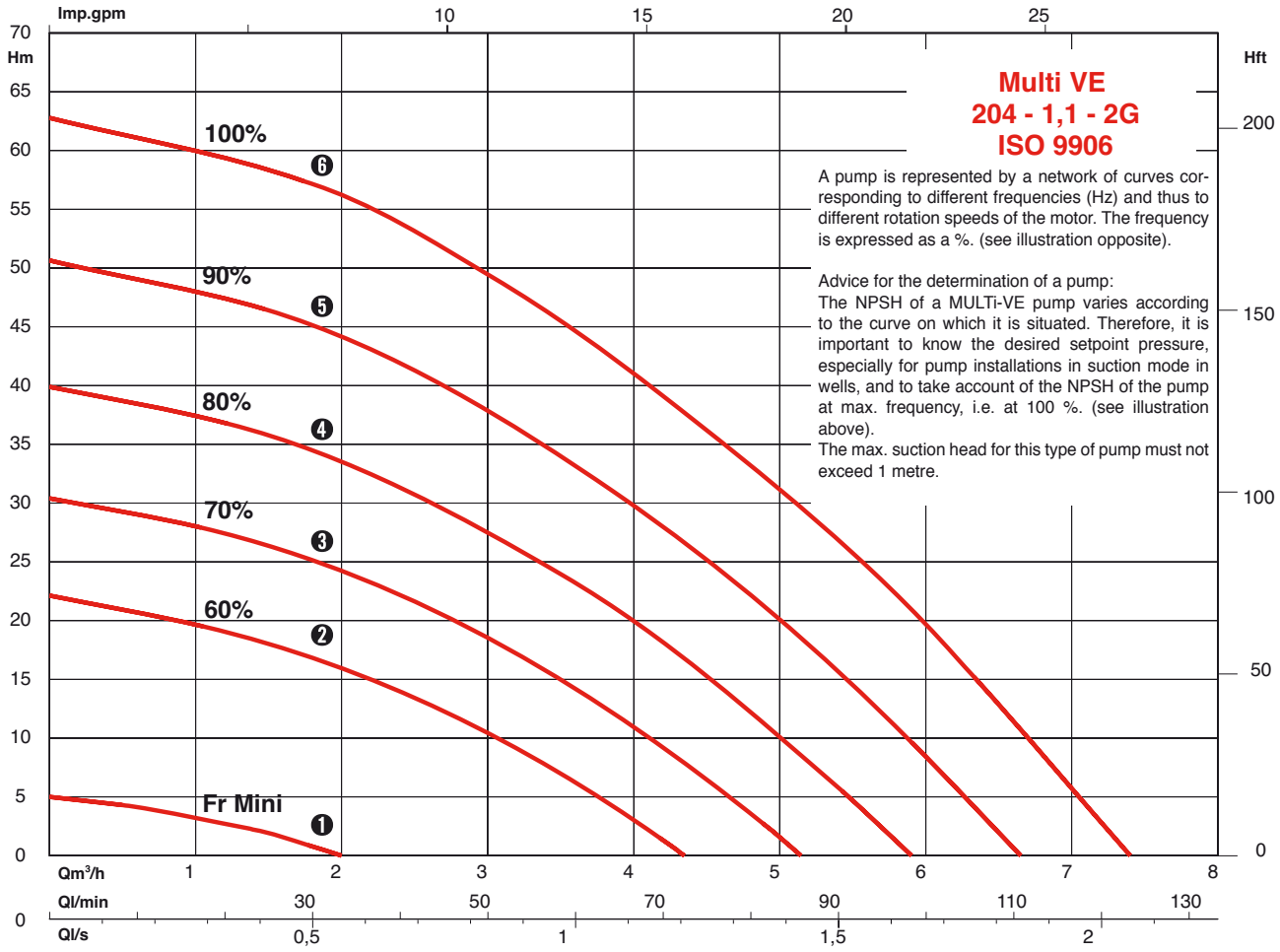

An EVS pump (Electronic Variation Speed) pump is represented by a network of curves representing the intermediate covered performances.

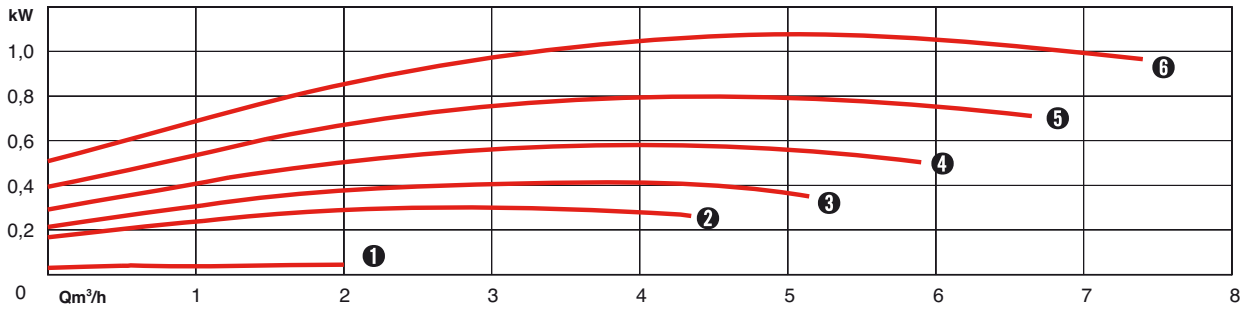

With speed variation, the power consumption is adapted to the required Q/H, thus resulting in significant energy savings.

Here, the benefit of speed variation is once again demonstrated by the optimal efficiency over a wide range of flow rates, compared to a fixed-speed pump.

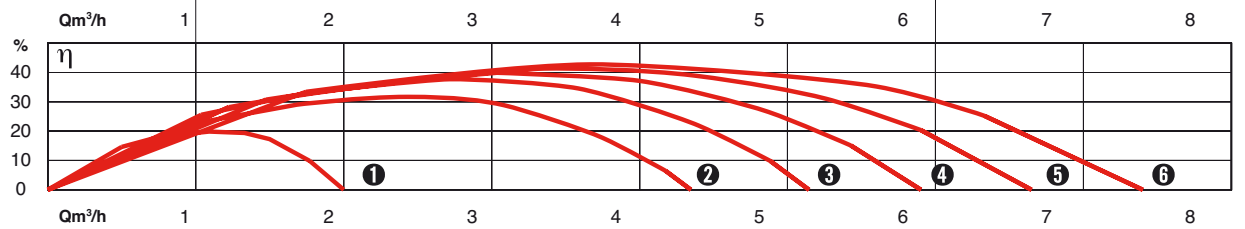

MULTI VE THREE-PHASE

PRESELECTION CHART

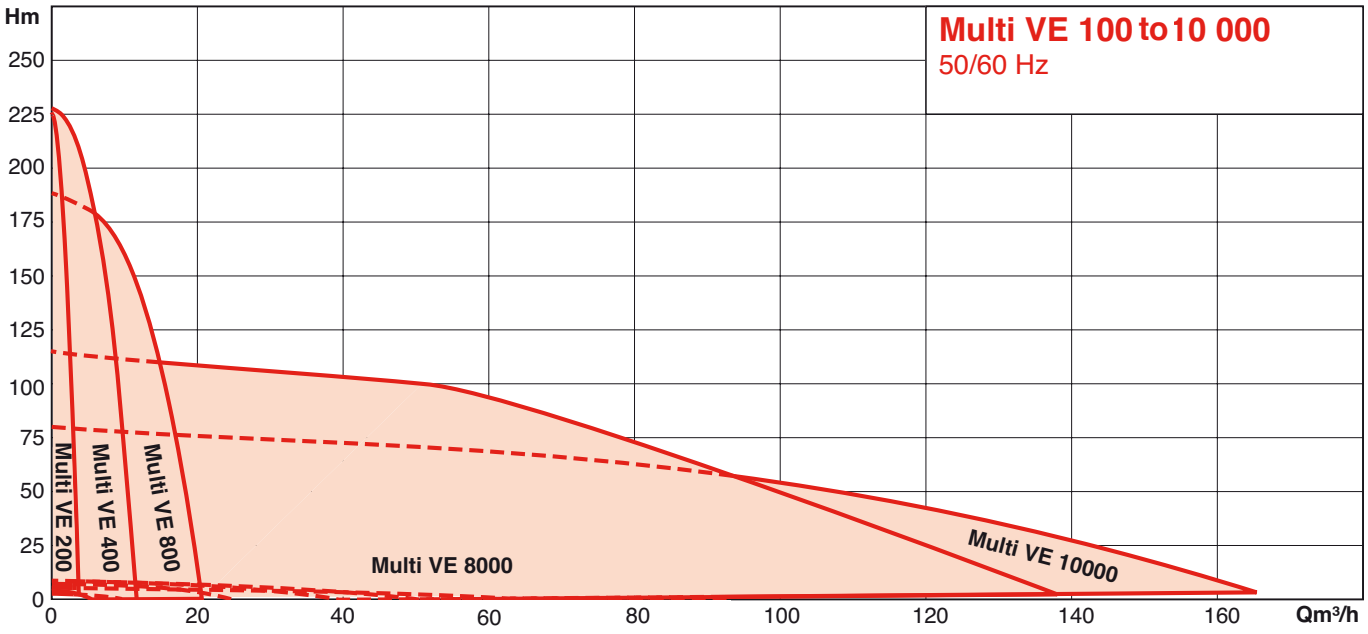

HYDRAULIC PERFORMANCE - 200 SERIE

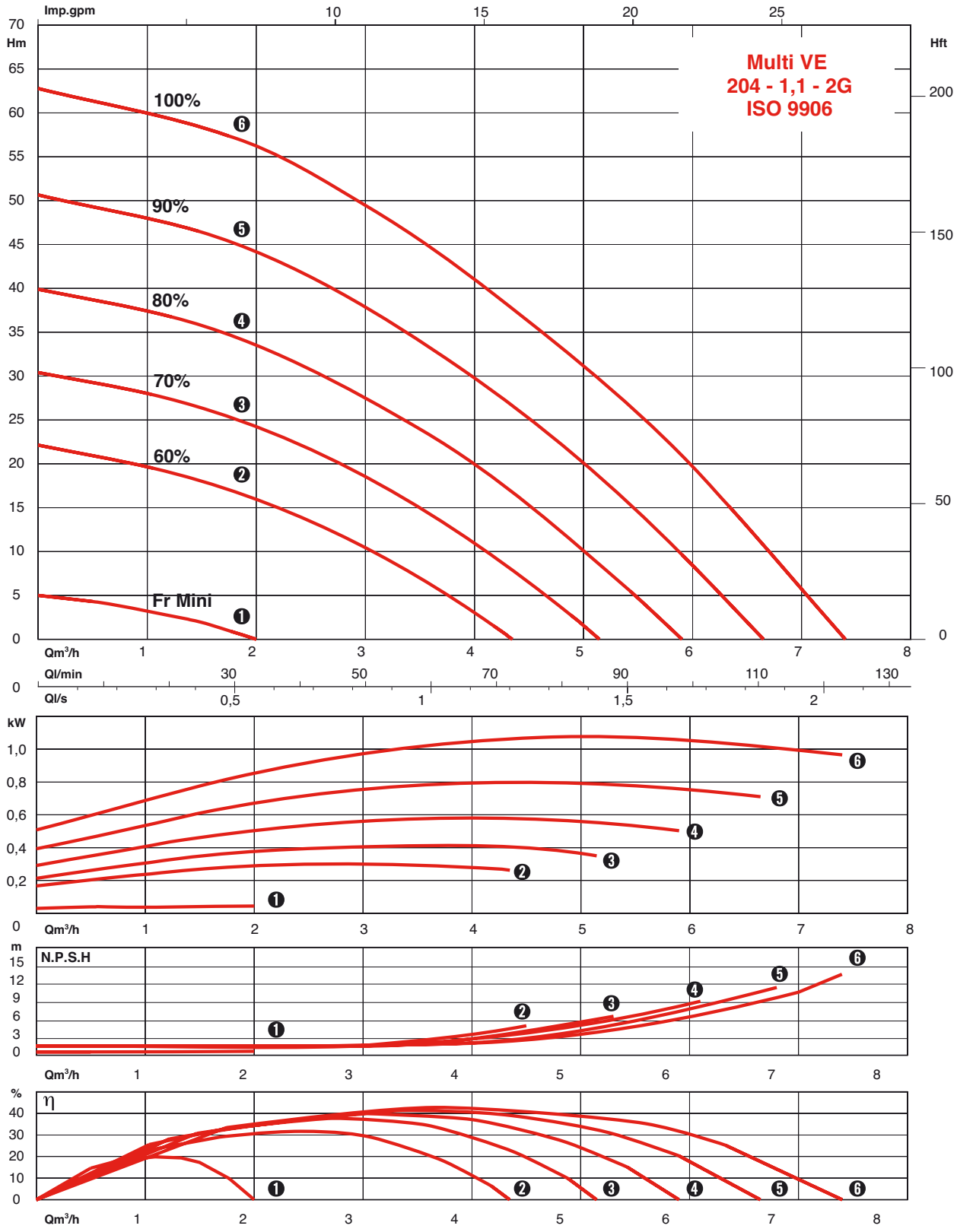

MULTI VE THREE-PHASE

HYDRAULIC PERFORMANCE - 200 SERIE

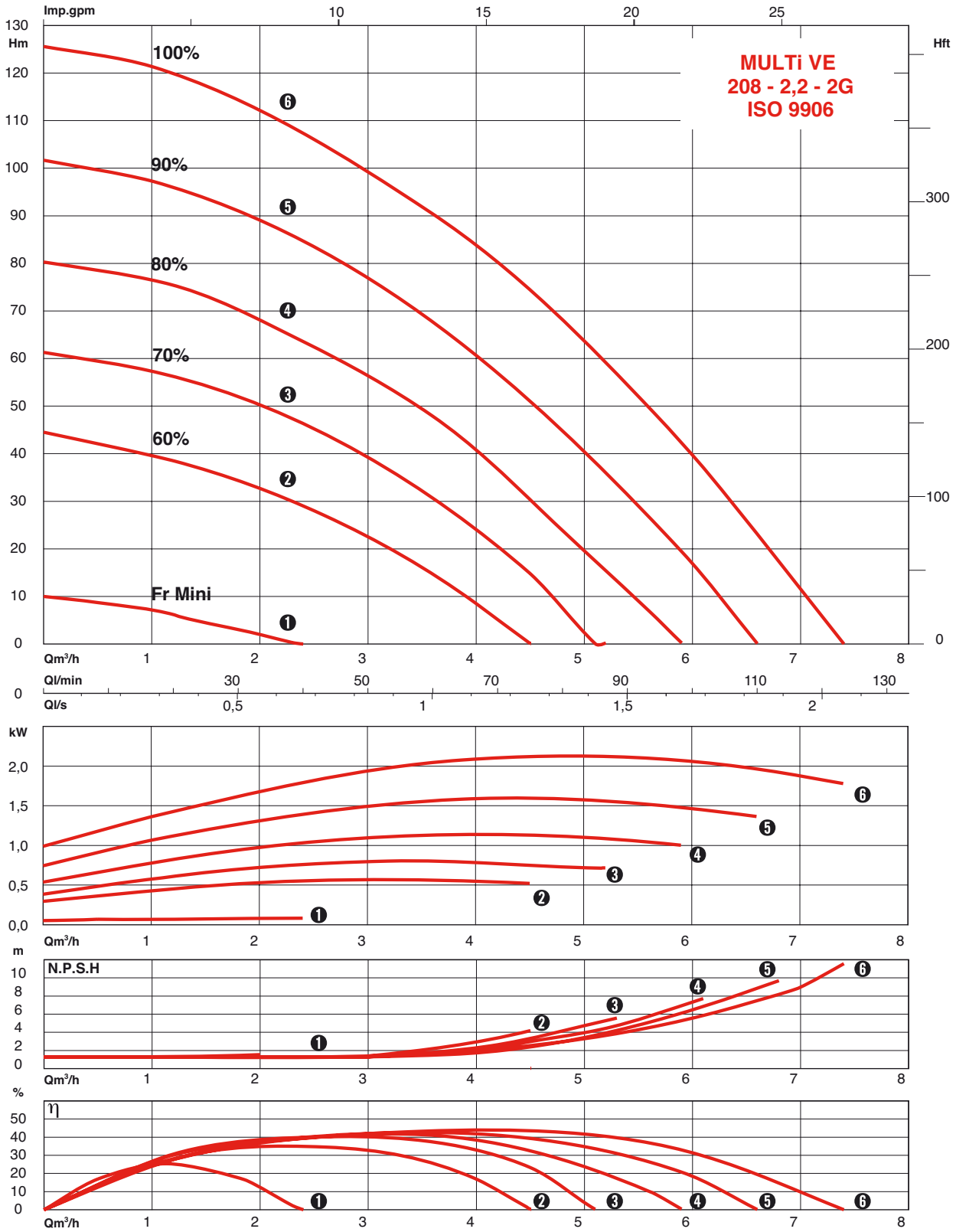

HYDRAULIC PERFORMANCE - 200 SERIE

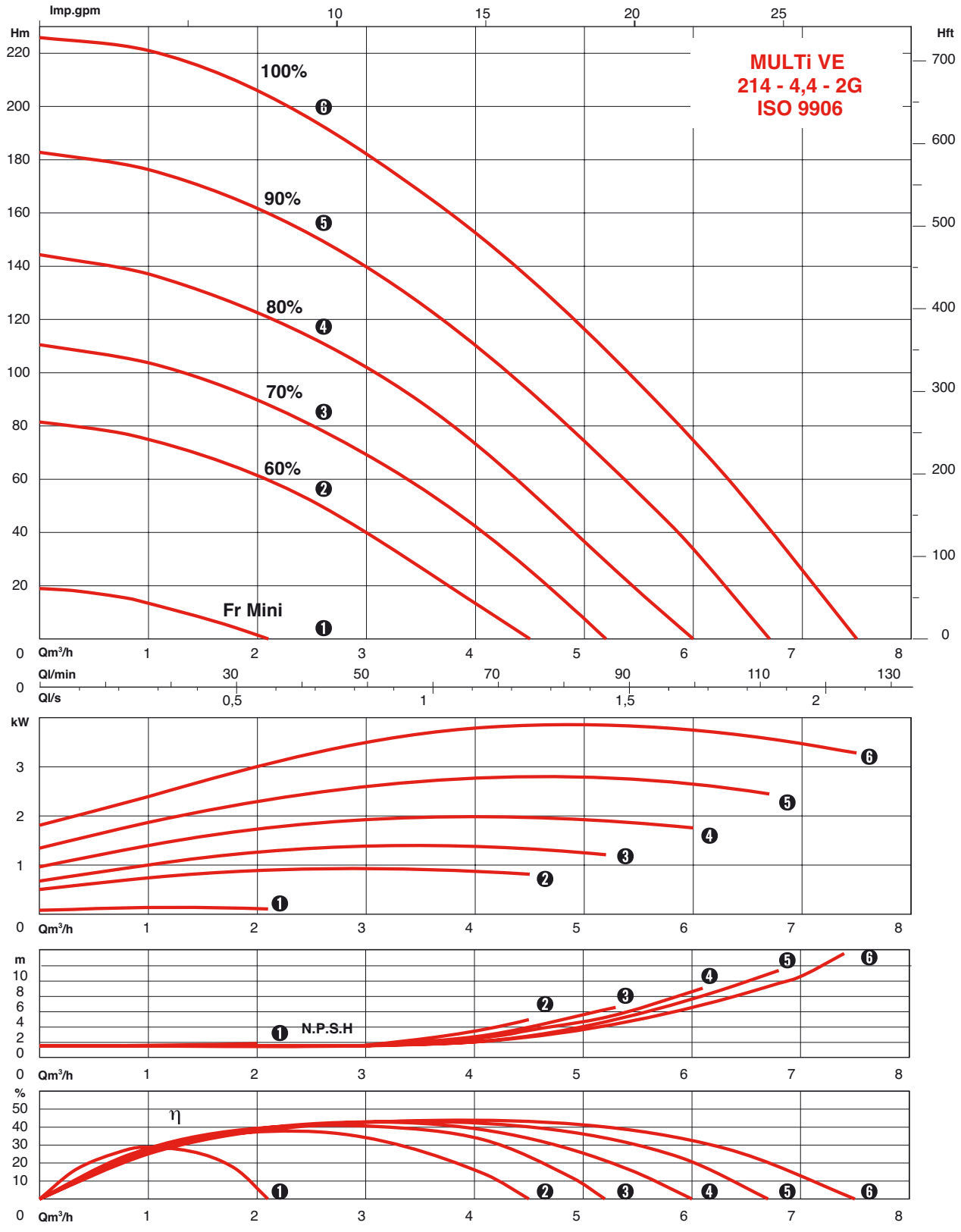

MULTI VE THREE-PHASE

HYDRAULIC PERFORMANCE - 400 SERIE

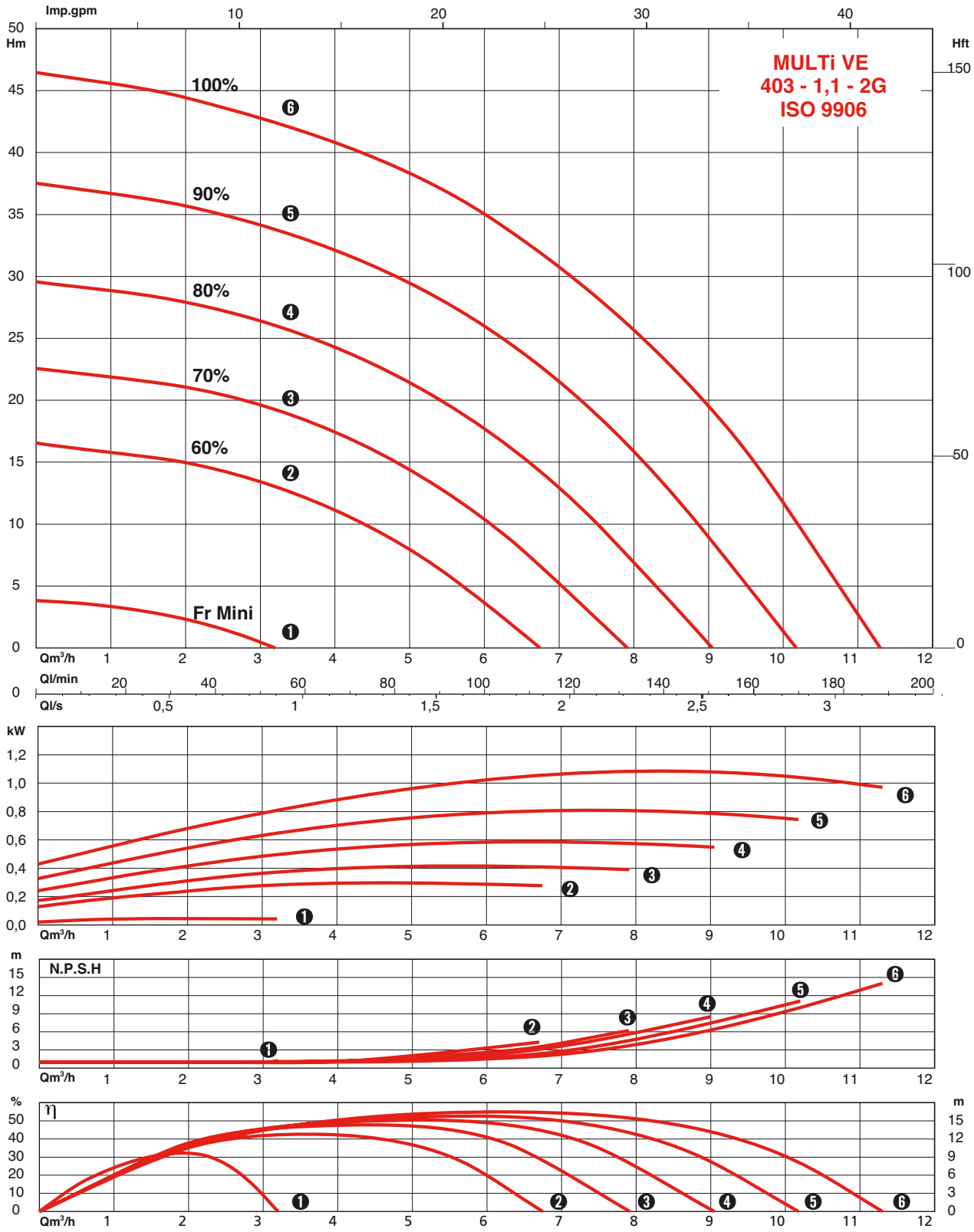

HYDRAULIC PERFORMANCE - 400 SERIE

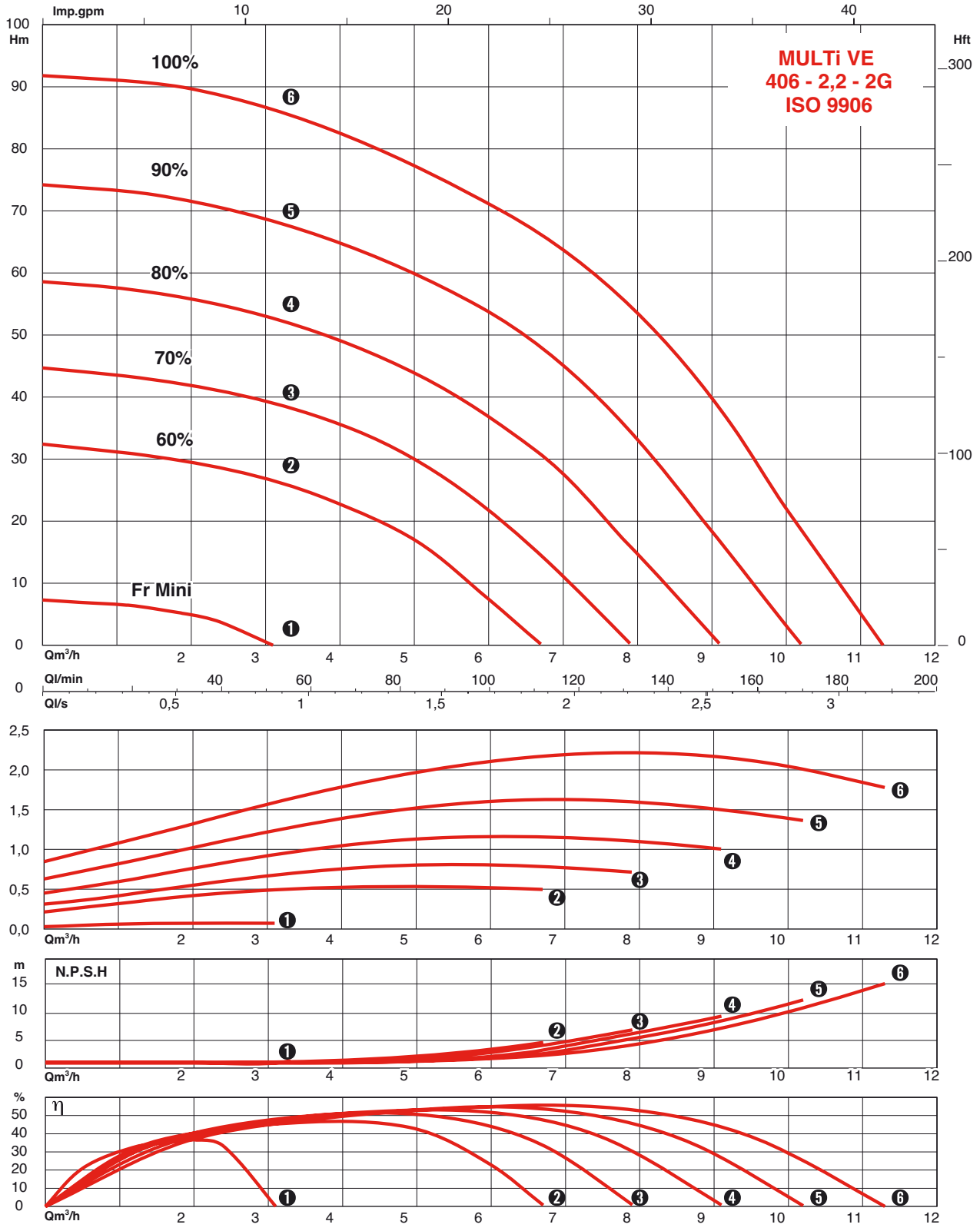

MULTI VE THREE-PHASE

HYDRAULIC PERFORMANCE - 400 SERIE

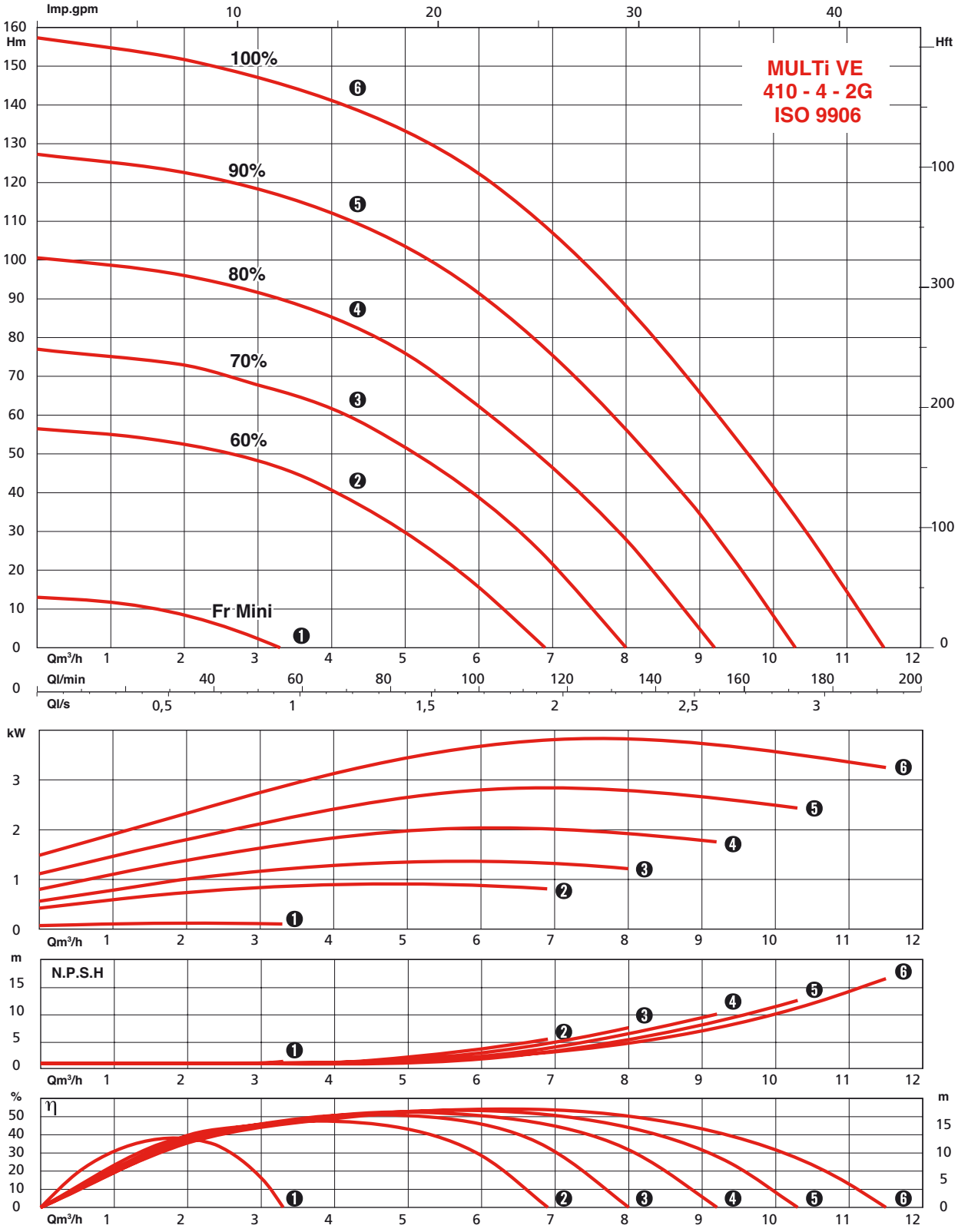

HYDRAULIC PERFORMANCE - 400 SERIE

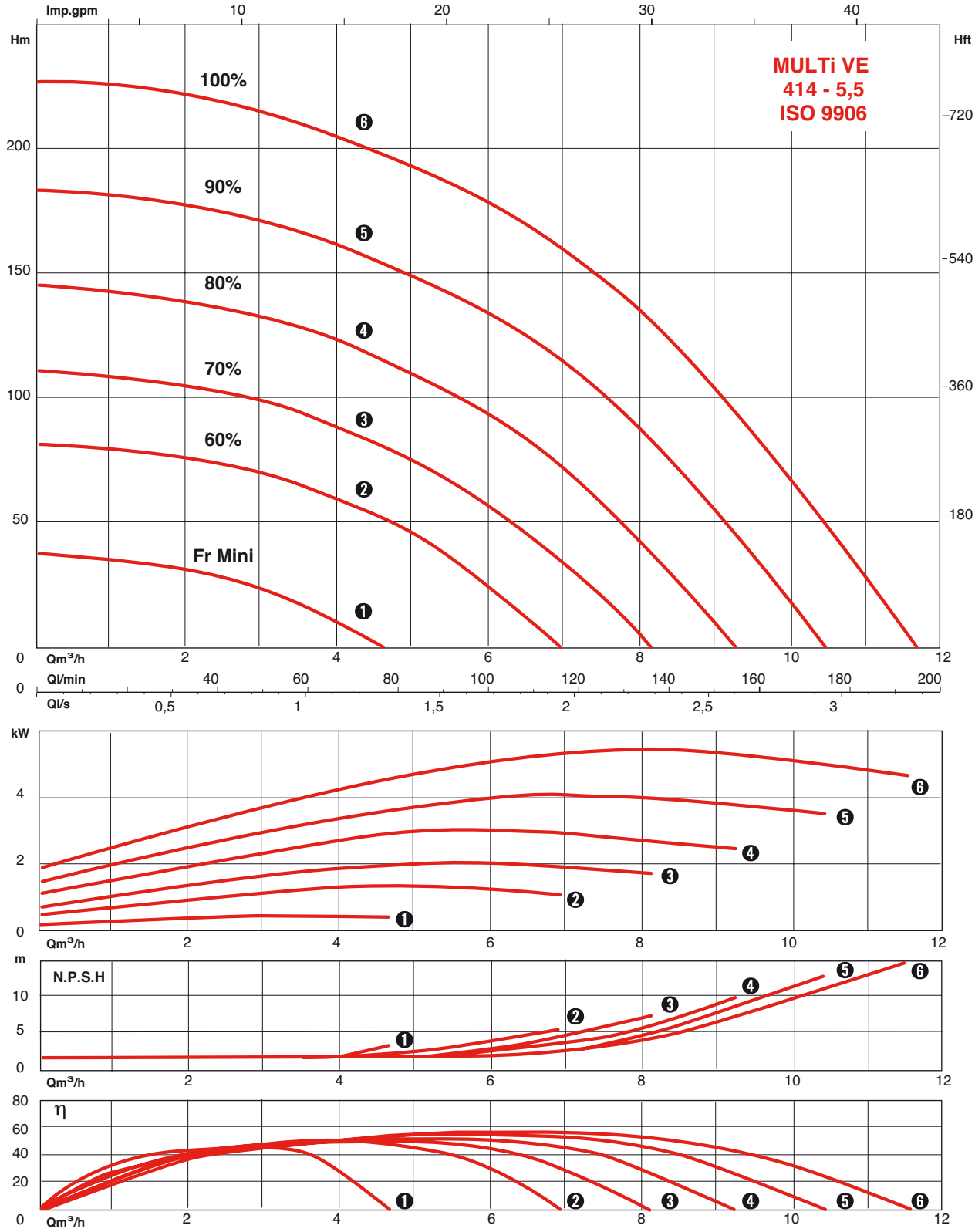

MULTI VE THREE-PHASE

HYDRAULIC PERFORMANCE - 800 SERIE

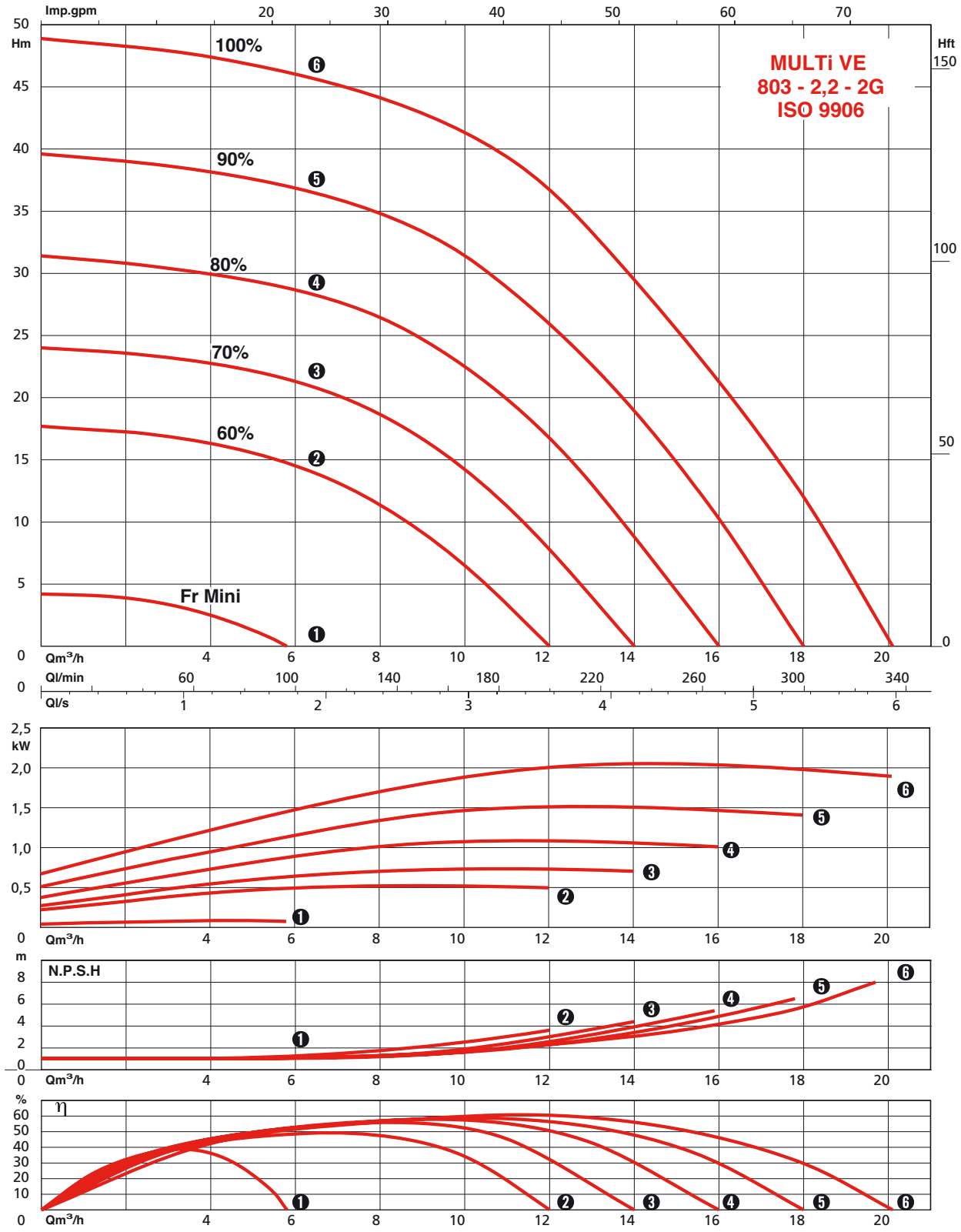

HYDRAULIC PERFORMANCE - 800 SERIE

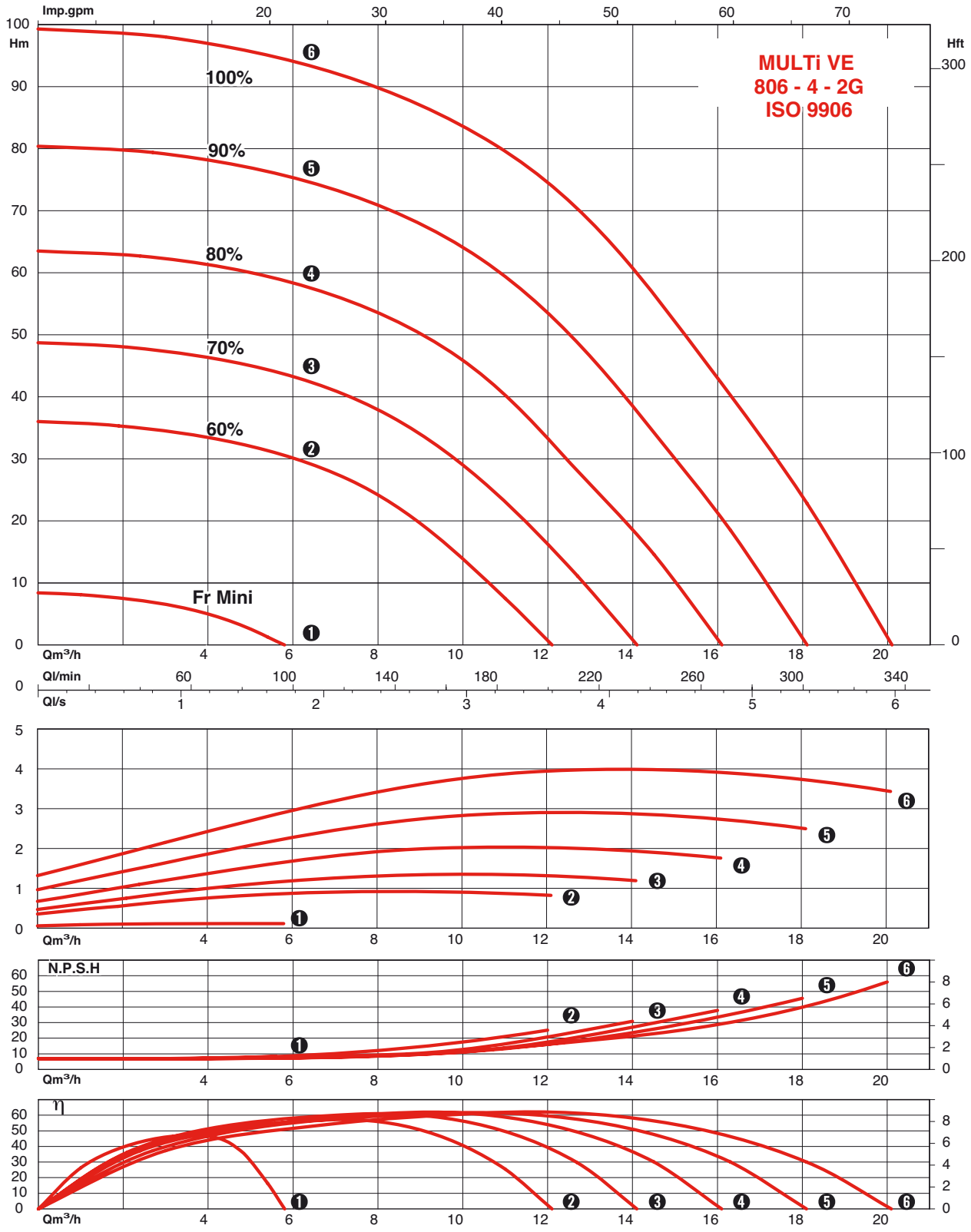

MULTI VE THREE-PHASE

HYDRAULIC PERFORMANCE - 800 SERIE

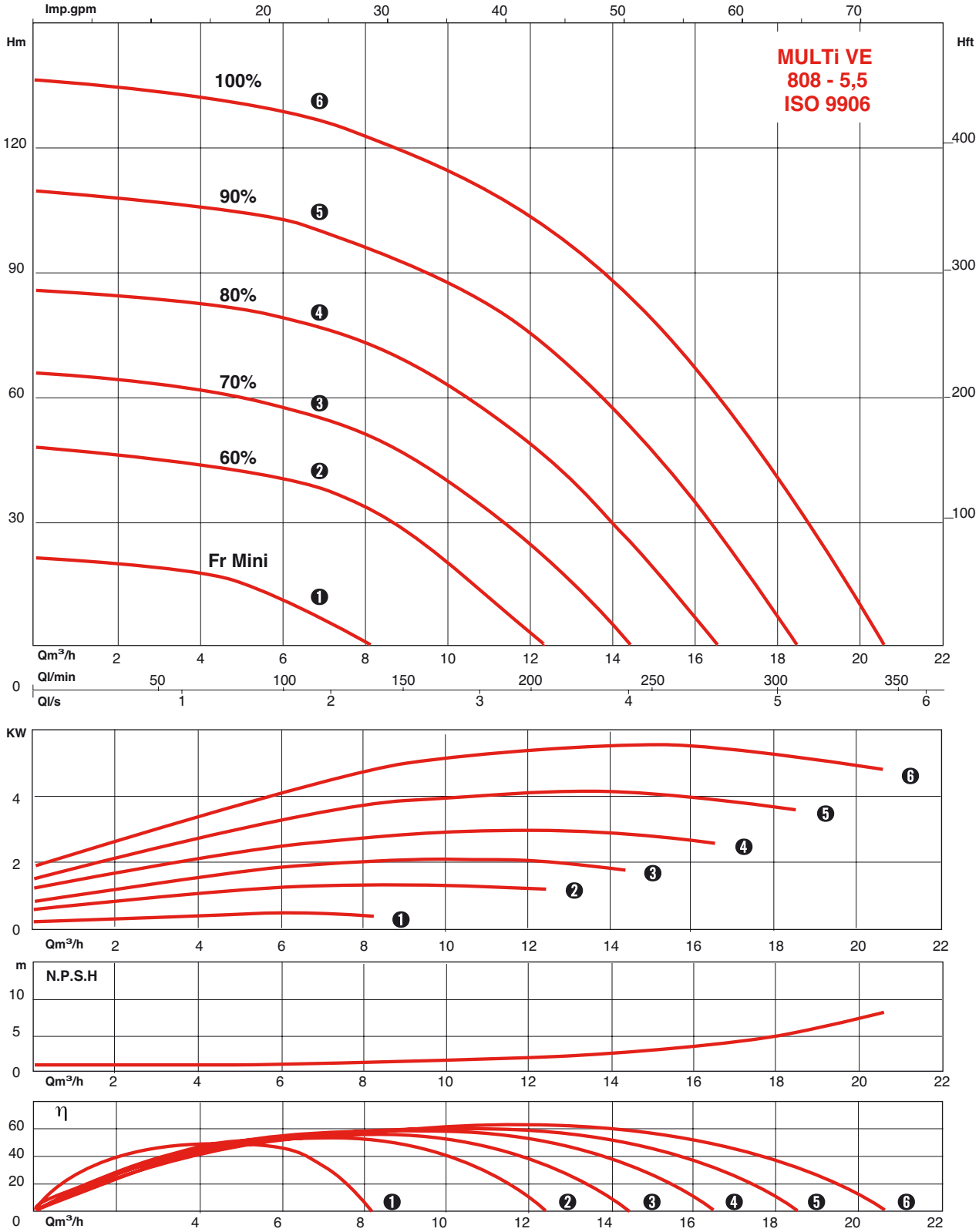

HYDRAULIC PERFORMANCE - 800 SERIE

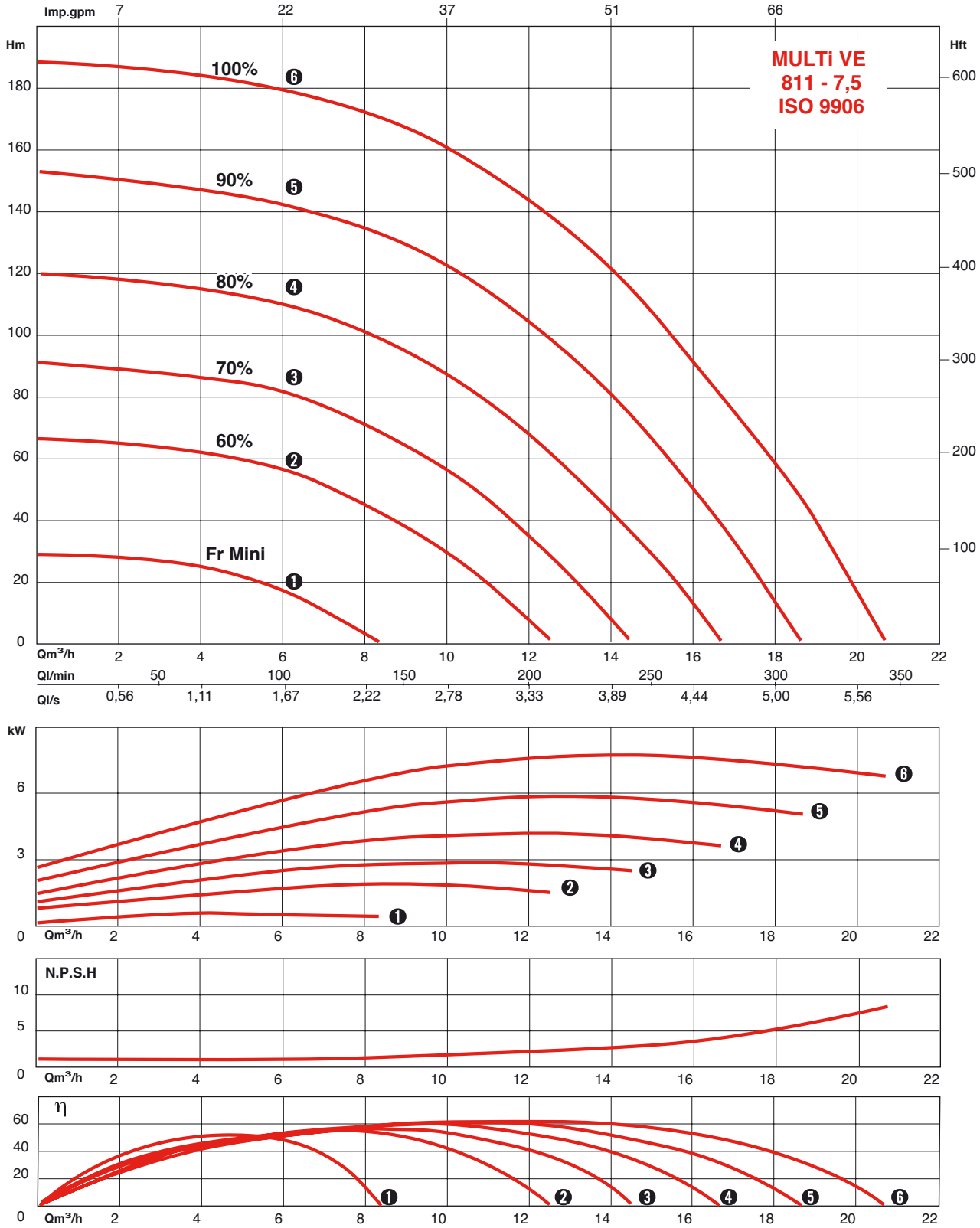

MULTI VE THREE-PHASE

HYDRAULIC PERFORMANCE - 8000 SERIE

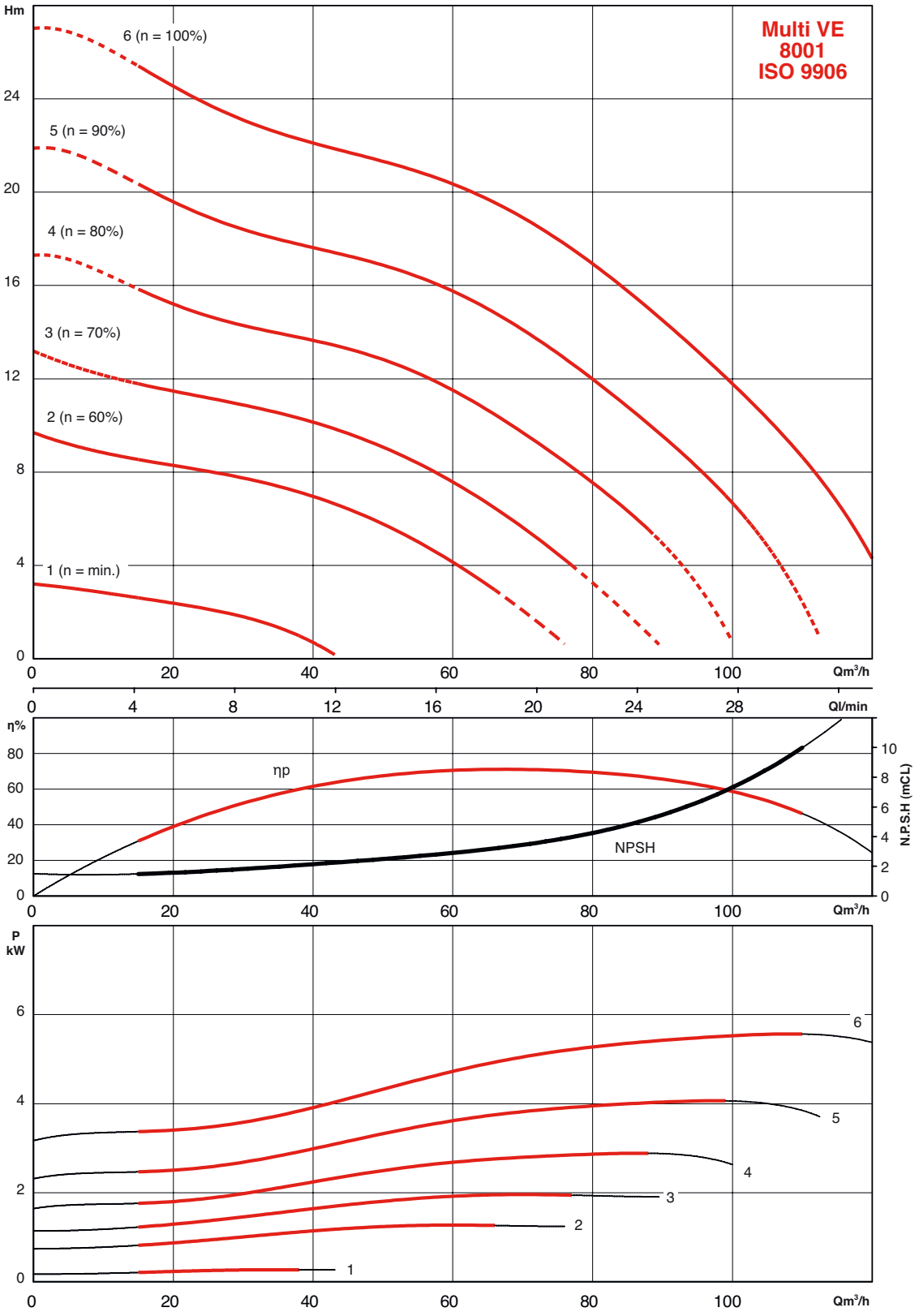

HYDRAULIC PERFORMANCE - 8000 SERIE

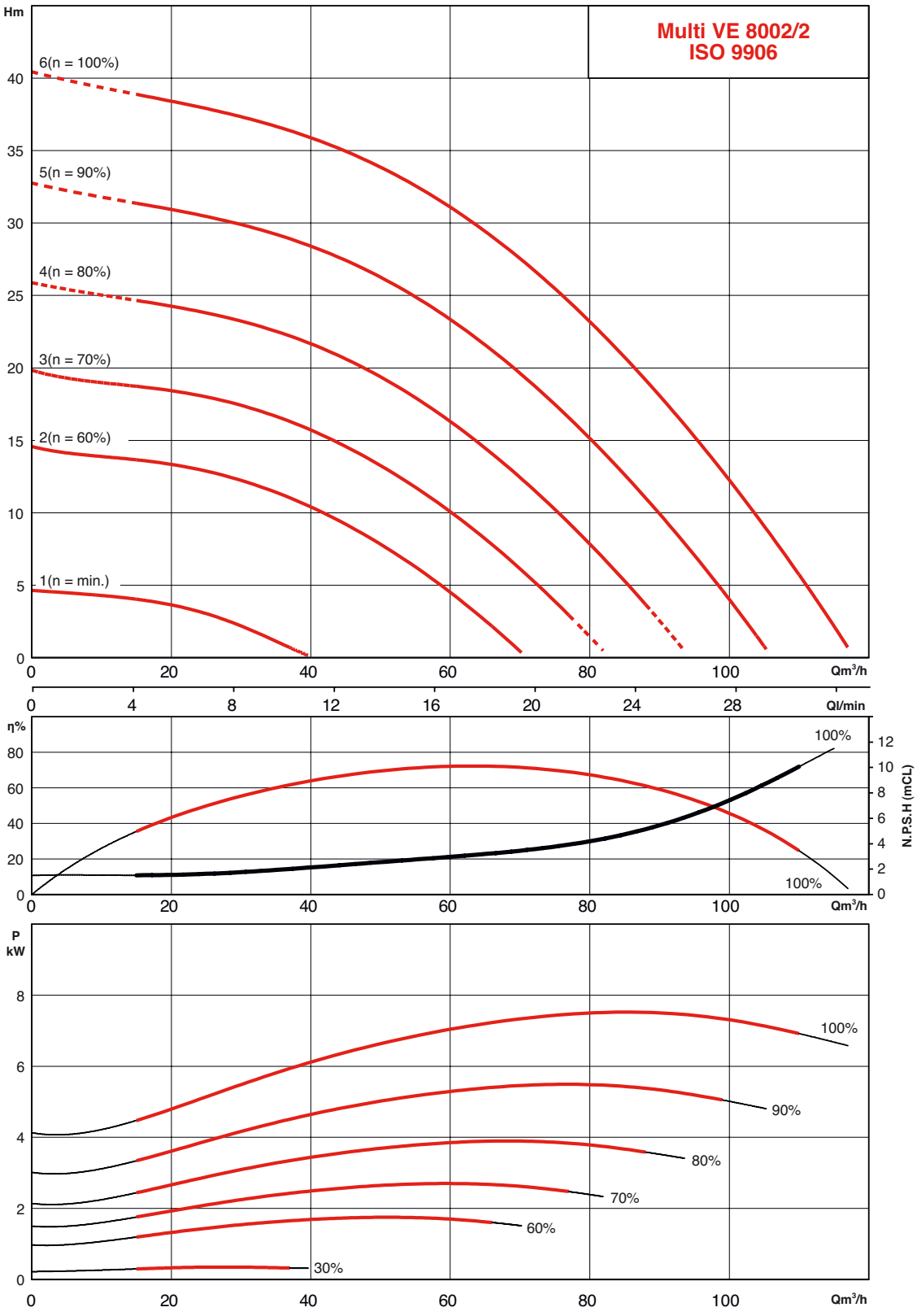

MULTI VE THREE-PHASE

HYDRAULIC PERFORMANCE - 8000 SERIE

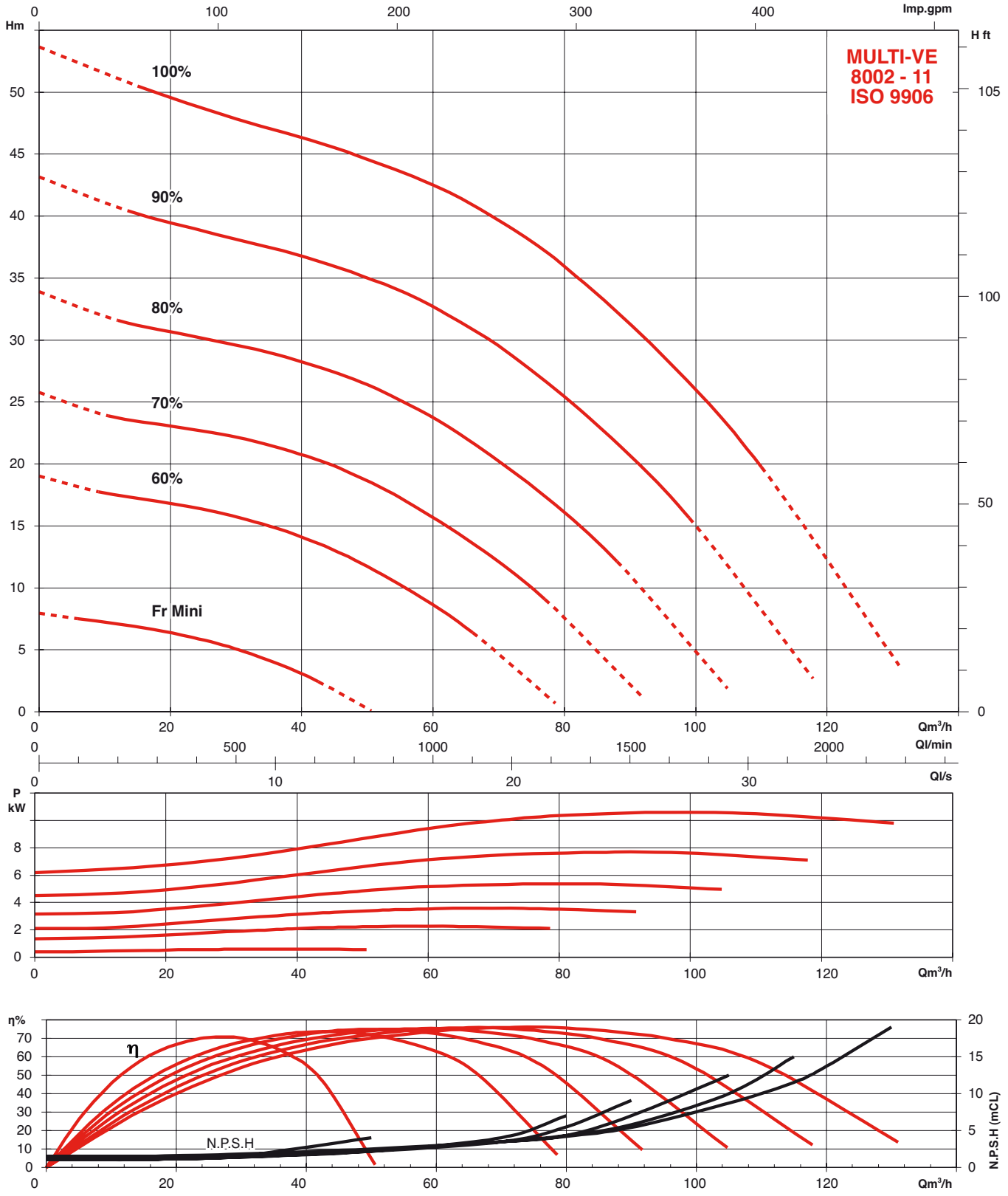

HYDRAULIC PERFORMANCE - 8000 SERIE

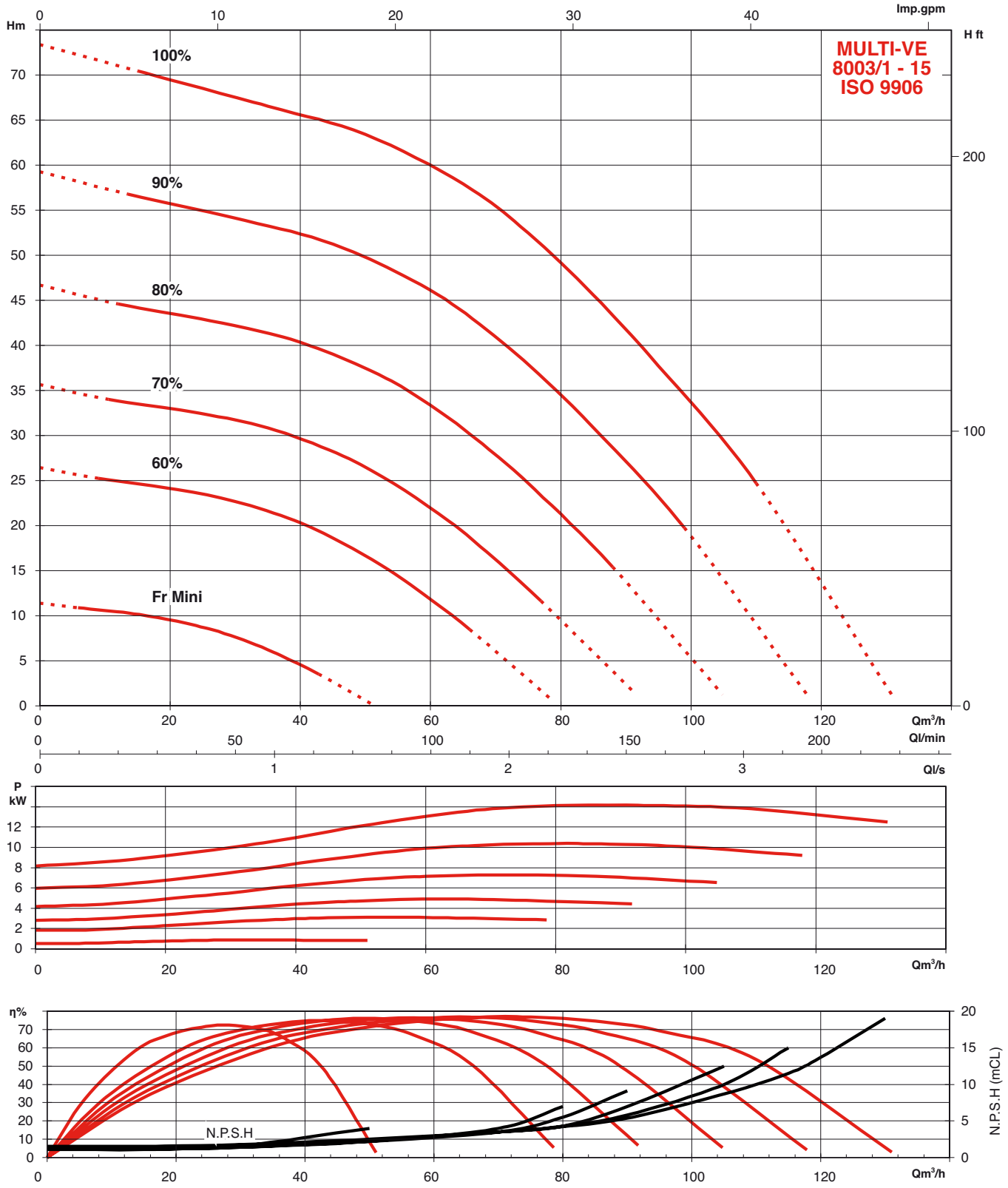

MULTI VE THREE-PHASE

HYDRAULIC PERFORMANCE - 8000 SERIE

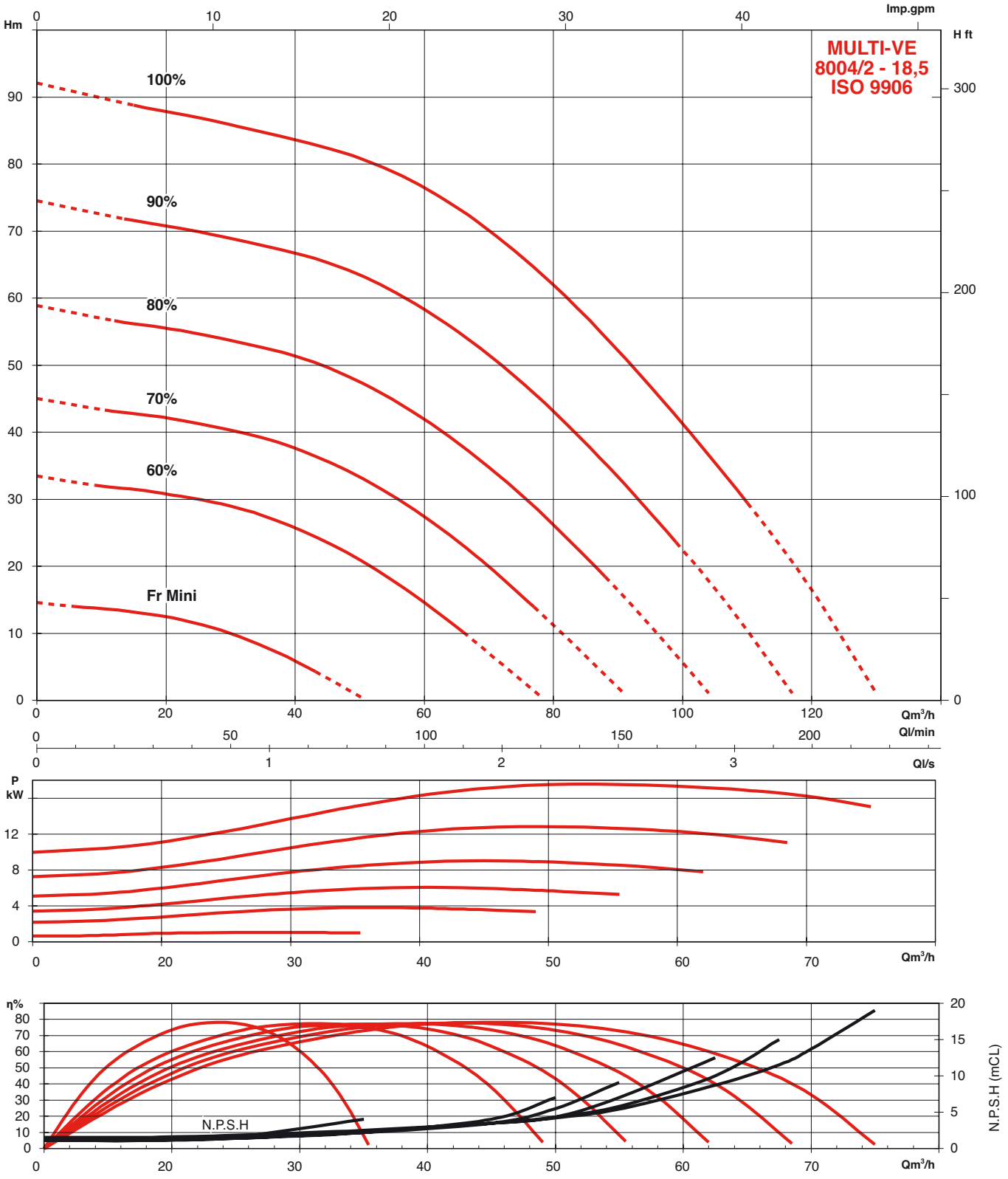

HYDRAULIC PERFORMANCE - 8000 SERIE

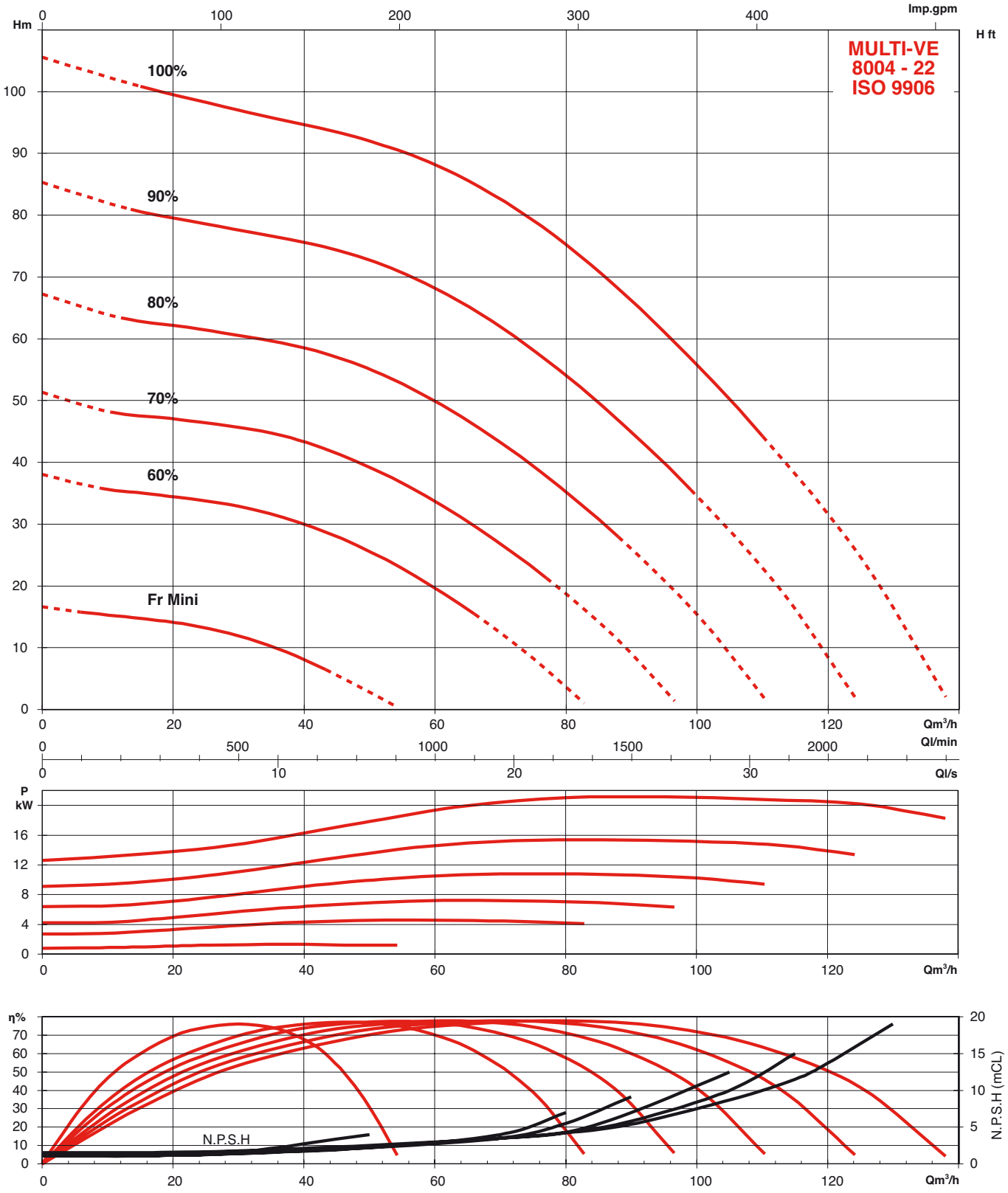

MULTI VE THREE-PHASE

HYDRAULIC PERFORMANCE - 100 00 SERIE

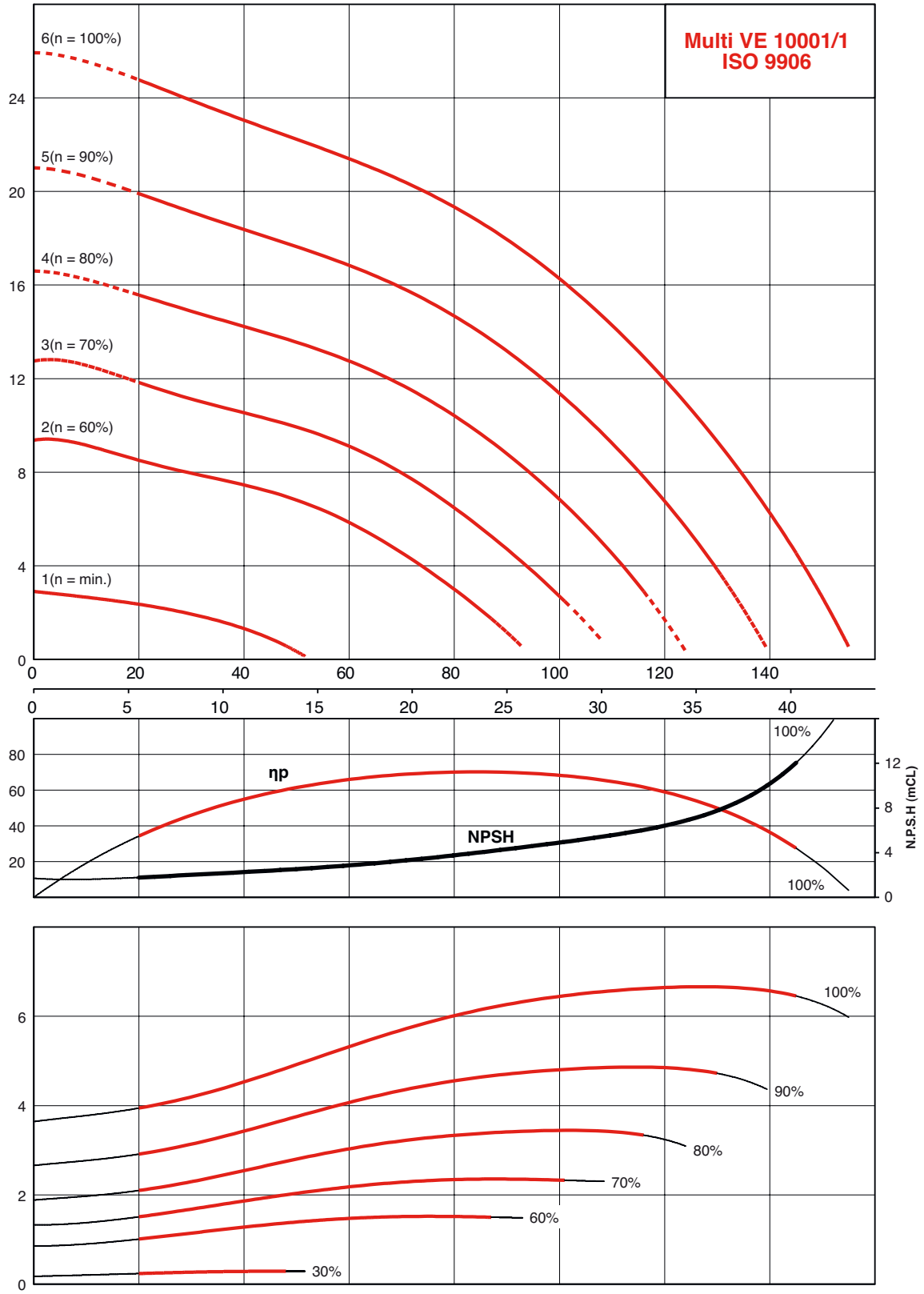

HYDRAULIC PERFORMANCE - 100 00 SERIE

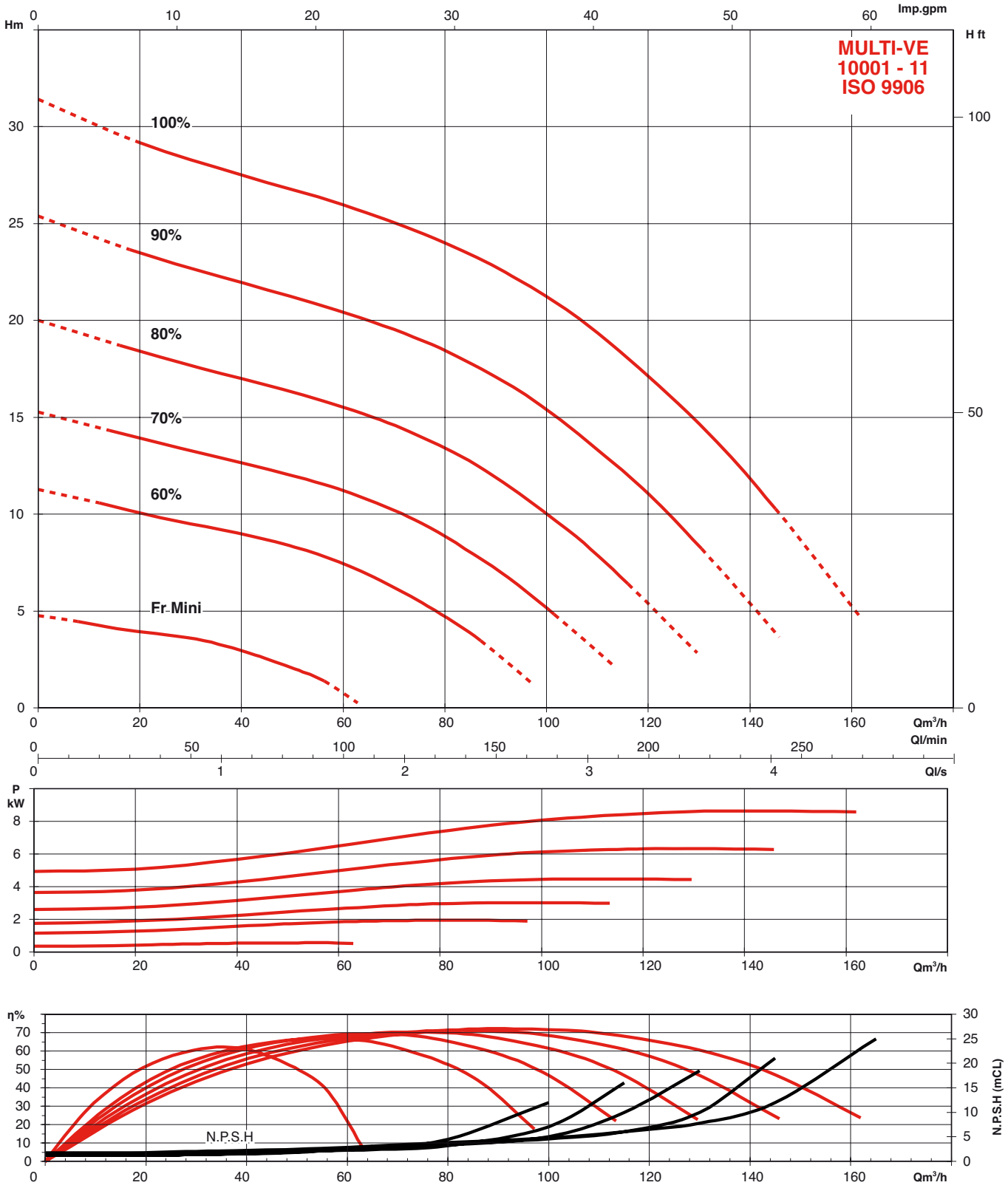

MULTI VE THREE-PHASE

HYDRAULIC PERFORMANCE - 100 00 SERIE

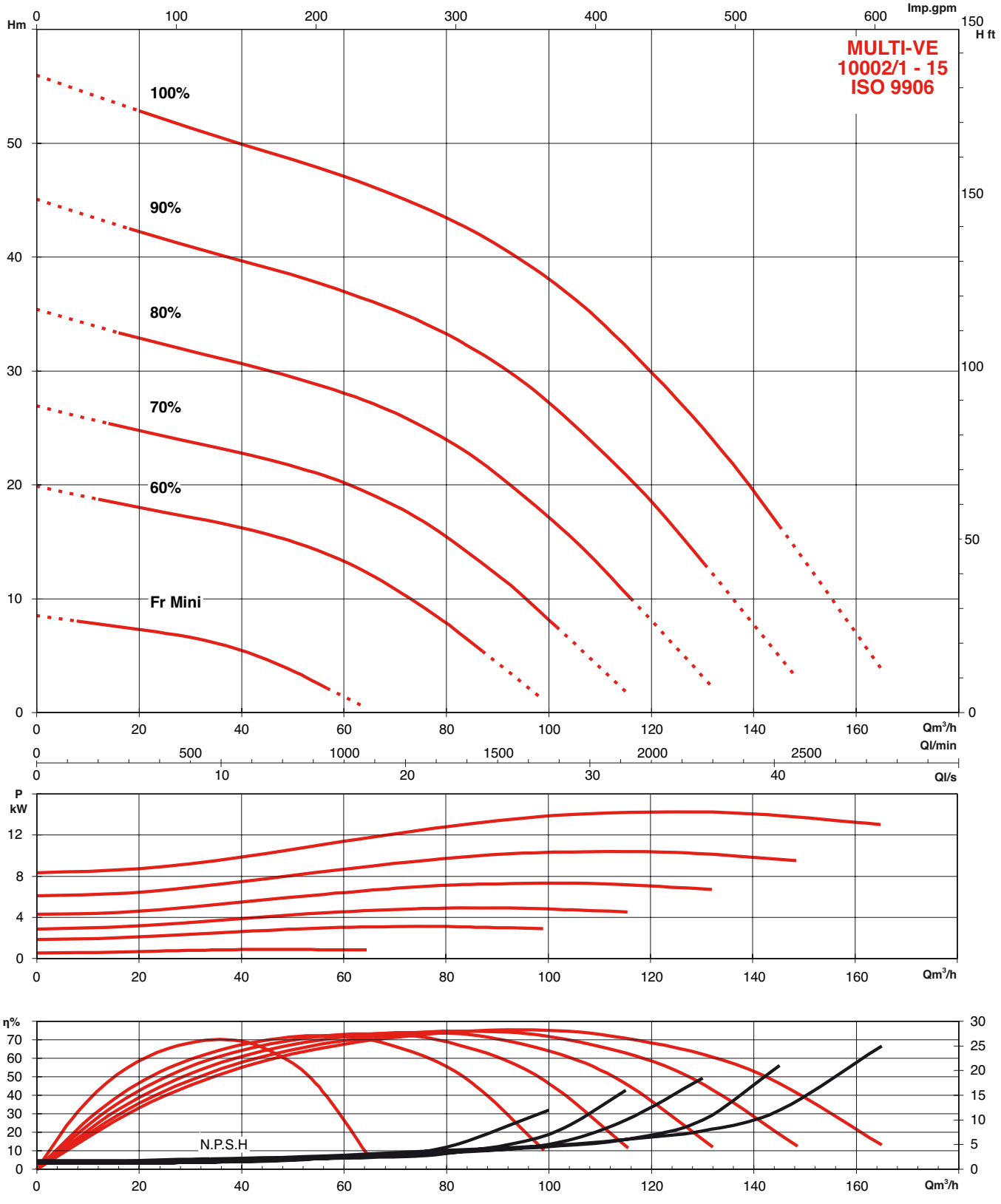

HYDRAULIC PERFORMANCE - 100 00 SERIE

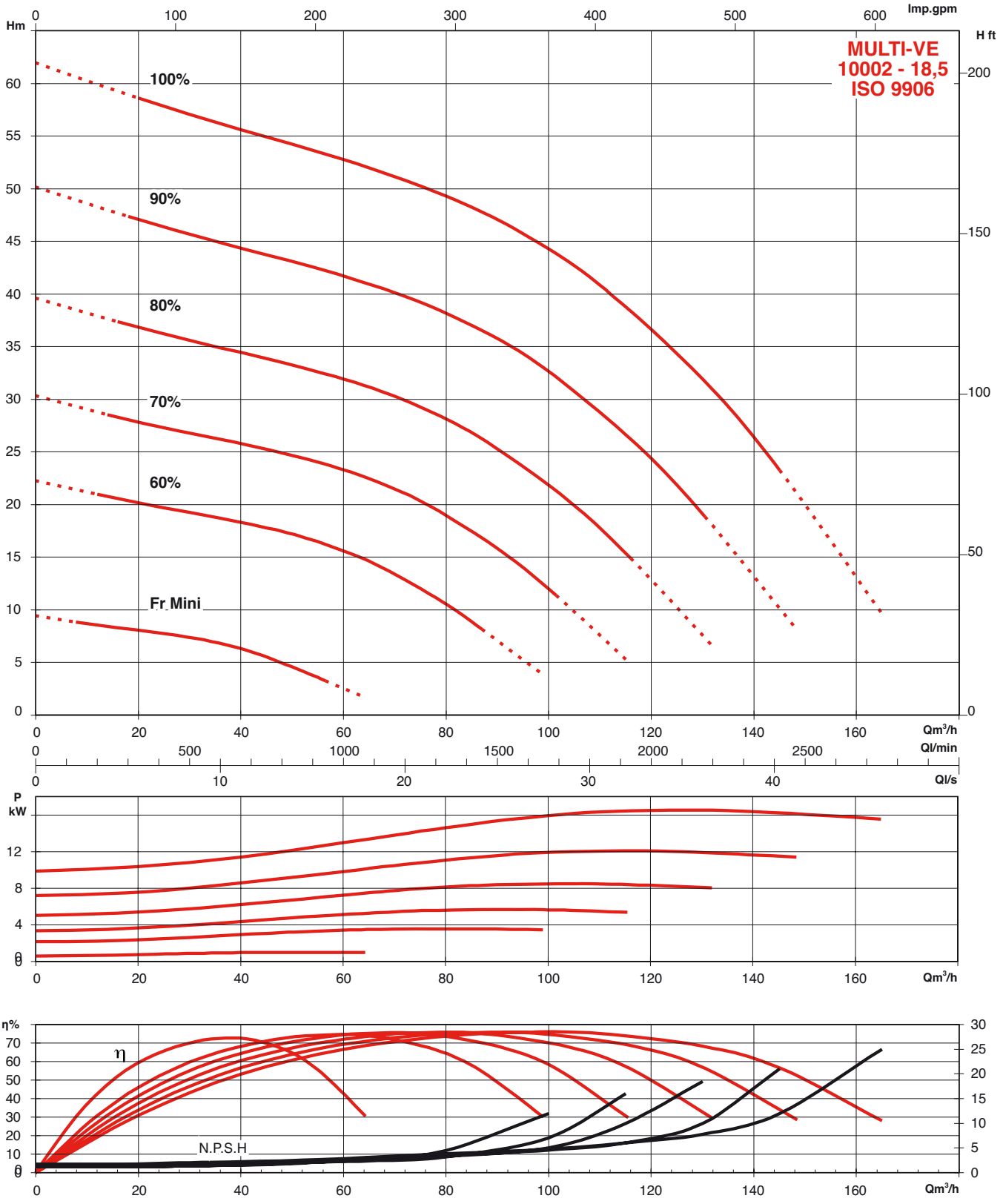

MULTI VE THREE-PHASE

HYDRAULIC PERFORMANCE - 100 00 SERIE

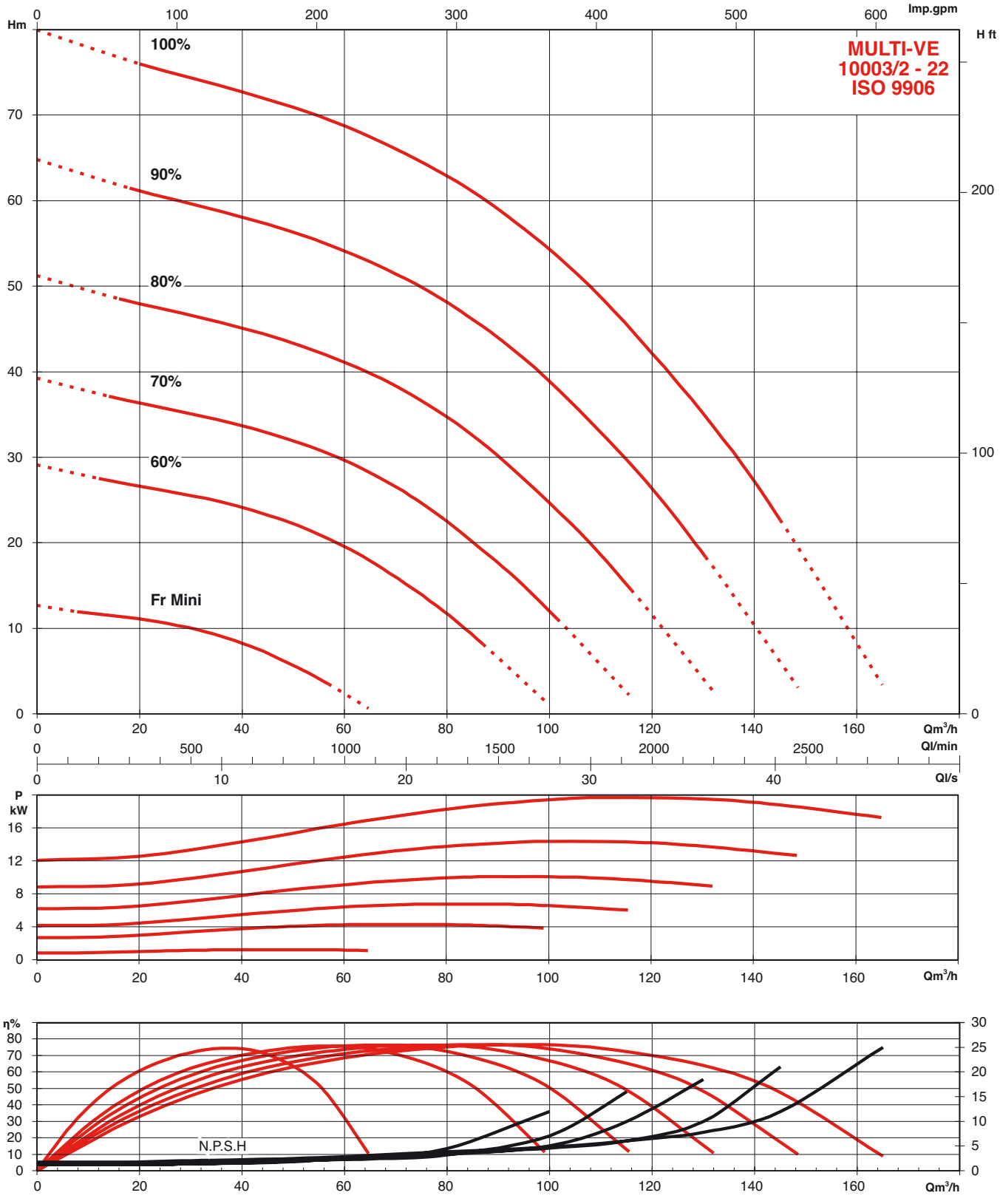

ELECTRICAL AND DIMENSIONAL SPECIFICATIONS

• 200 SERIE - PN 25 - PN 16 Oval brides - VICTAULIC quick connector

Order reference	Designation		Freq.	Voltage	Intensity	P2	X	H	H2	ØM	Mass in kg	
		PN	Hz	V	A	kW	mm	mm	mm	mm	without pack.	with pack.
4077300	MULTI-VE204-RXV-T4/2-2G	16	50	400	3,3	1,1	237	594,5	354,5	155	26,6	31,1
4077266	MULTI-VE204-FSE-T4/2-2G	25	50	400	3,3	1,1	237	595,5	355,5	155	26,6	31,1
4077292	MULTI-VE204-FXV-T4/2-2G	25	50	400	3,3	1,1	237	595,5	355,5	155	26,6	31,1
4077259	MULTI-VE208-OSE-T4/2-2G	16	50	400	5,6	2,2	254	720,5	436,5	170	37,2	42,5
4077267	MULTI-VE208-FSE-T4/2-2G	25	50	400	5,6	2,2	254	745,5	461,5	170	38,6	43,9
4077293	MULTI-VE208-FXV-T4/2-2G	25	50	400	5,6	2,2	254	745,5	461,5	170	38,6	43,9
4077301	MULTI-VE208-RXV-T4/2-2G	25	50	400	5,6	2,2	254	720,5	436,5	170	38,6	43,9
4077268	MULTI-VE214-FSE-T4/2-2G	25	50	400	9,7	4	284	949,5	615,5	220	57,1	62,4
4077294	MULTI-VE214-FXV-T4/2-2G	25	50	400	9,7	4	284	949,5	615,5	220	57,1	62,4
4077302	MULTI-VE214-RXV-T4/2-2G	25	50	400	9,7	4	284	949,5	615,5	220	57,1	62,4

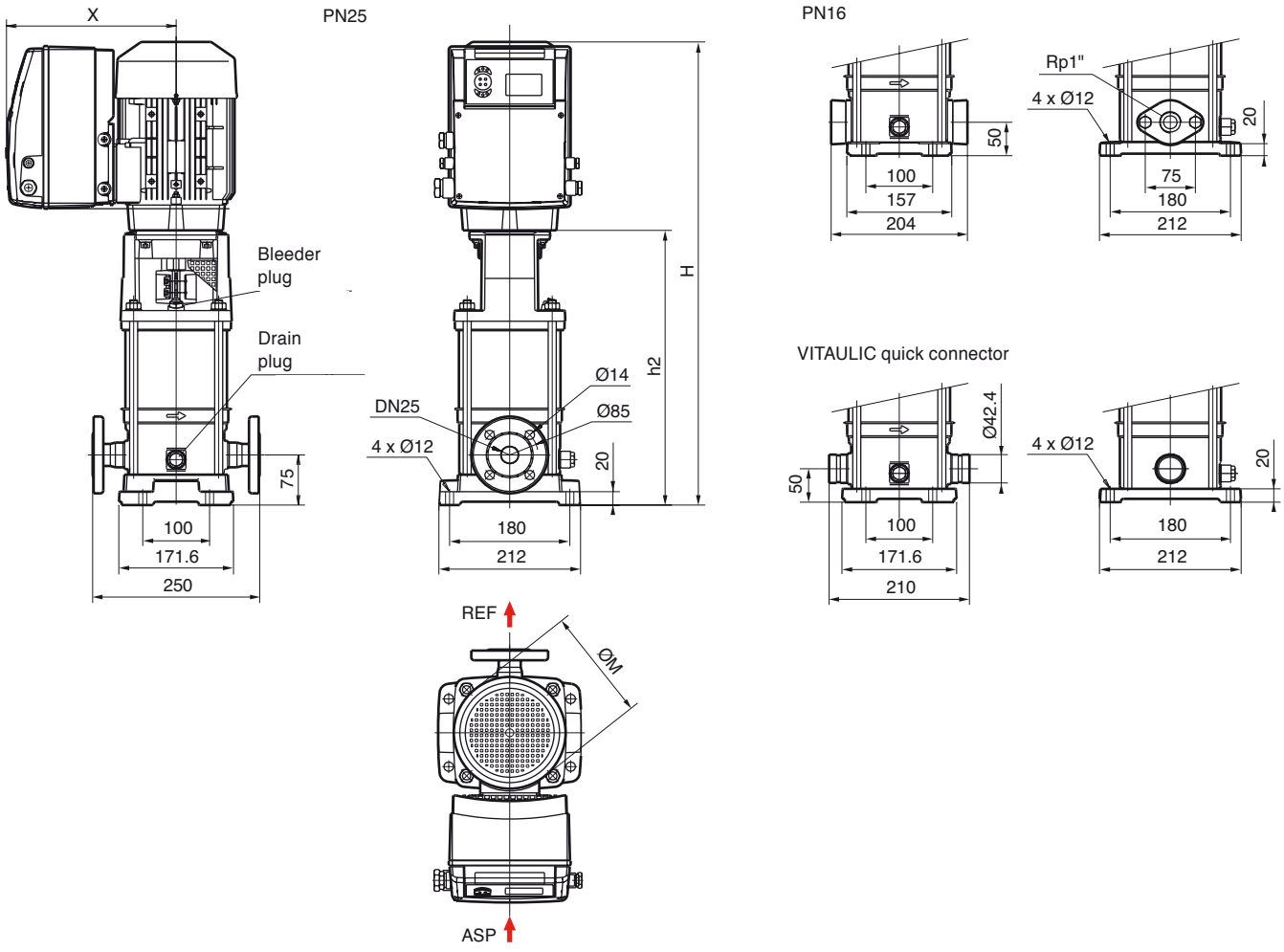

MULTI VE THREE-PHASE

ELECTRICAL AND DIMENSIONAL SPECIFICATIONS

• 200 SERIE - PN 25 - PN 16 Oval brides - VICTAULIC quick connector

Order reference	Designation		Freq.	Voltage	Intensity	P2	X	H	H2	ØM	Mass In kg	
		PN	Hz	V	A	kW	mm	mm	mm	mm	without pack.	with pack.
4077260	MULTI-VE403-OSE-T4/2-2G	16	50	400	3,3	1,1	237	546,6	306,5	155	25,3	29,8
4077269	MULTI-VE403-FSE-T4/2-2G	16	50	400	3,3	1,1	237	571,5	331,5	155	26,6	31,1
4077295	MULTI-VE403-FXV-T4/2-2G	16	50	400	3,3	1,1	237	571,5	331,5	155	26,6	31,1
4077303	MULTI-VE403-RXV-T4/2-2G	16	50	400	3,3	1,1	237	546,6	306,5	155	26,6	31,1
4077261	MULTI-VE406-OSE-T4/2-2G	16	50	400	5,6	2,2	254	672,5	388,5	170	36,5	41,8
4077270	MULTI-VE406-FSE-T4/2-2G	25	50	400	5,6	2,2	254	697,5	413,5	170	37,9	43,2
4077296	MULTI-VE406-FXV-T4/2-2G	25	50	400	5,6	2,2	254	697,5	413,5	170	37,9	43,2
4077304	MULTI-VE406-RXV-T4/2-2G	25	50	400	5,6	2,2	254	672,5	388,5	170	37,9	43,2
4077271	MULTI-VE410-FSE-T4/2-2G	25	50	400	9,7	4	284	853,5	519,5	220	54,7	60
4077297	MULTI-VE410-FXV-T4/2-2G	25	50	400	9,7	4	284	853,5	519,5	220	54,7	60
4077305	MULTI-VE410-RXV-T4/2-2G	25	50	400	9,7	4	284	853,5	519,5	220	54,7	60
4122288	MULTI-VE414-FSE-T4/2-2G	25	50	400	10,8	5,5	308,5	1015	635	262	82,4	92,4
4122296	MULTI-VE414-FXV-T4/2-2G	25	50	400	10,8	5,5	308,5	1015	635	262	82,4	92,4

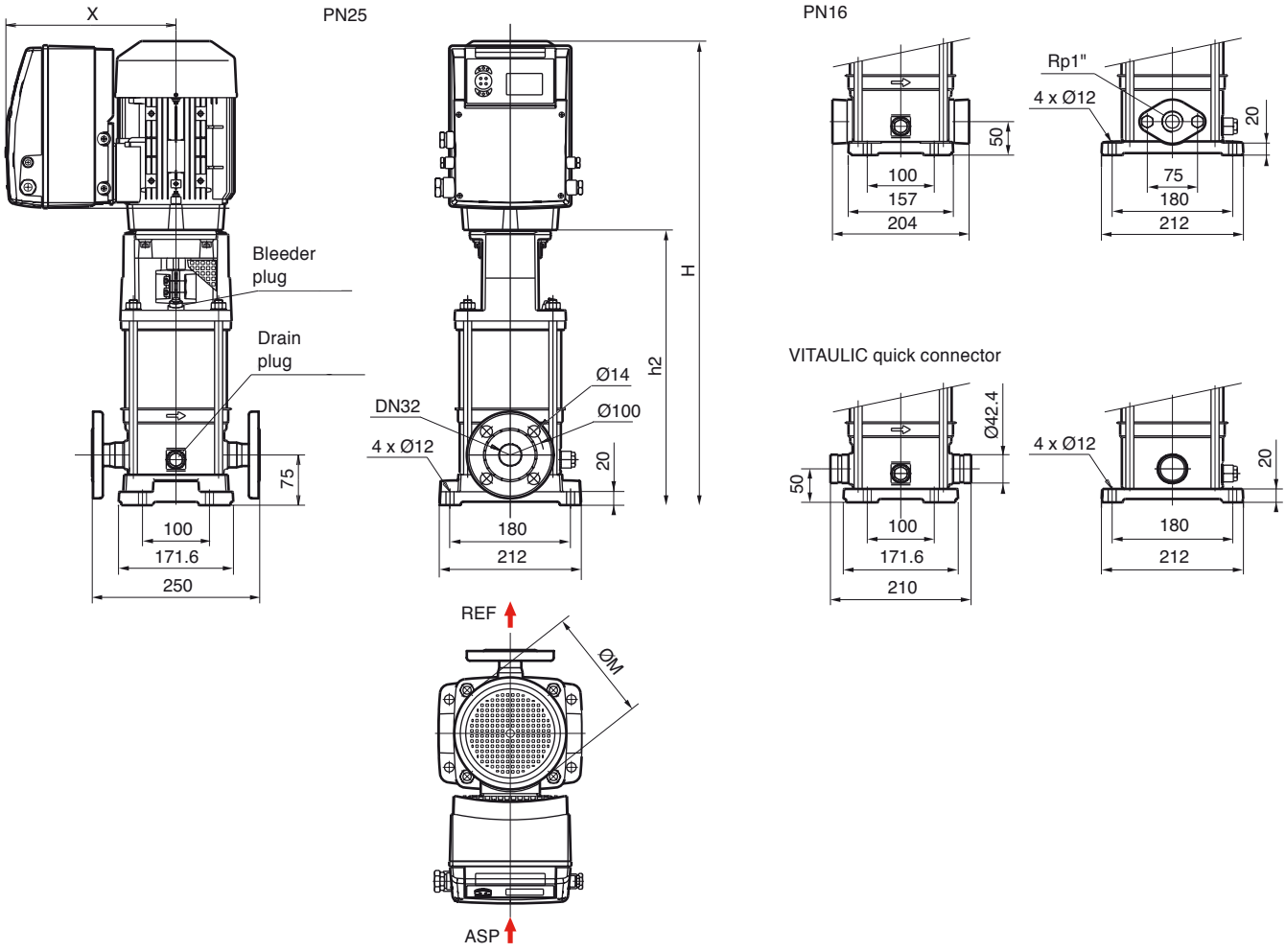

ELECTRICAL AND DIMENSIONAL SPECIFICATIONS

• 800 SERIE

Order reference	Designation		Freq.	Voltage	Intensity	P2	X	H	H2	ØM	Mass in kg	
		PN	Hz	V	A	kW	mm	mm	mm	mm	without pack.	with pack.
4077272	MULTI-VE803-FSE-T4/2-2G	25	50	400	5,6	2,2	254	657,5	373,5	170	37,1	42,4
4077298	MULTI-VE803-FXV-T4/2-2G	25	50	400	5,6	2,2	254	657,5	373,5	170	37,1	42,4
4077262	MULTI-VE803-OSE-T4/2-2G	16	50	400	5,6	2,2	254	657,5	373,5	170	36,7	42
4077306	MULTI-VE803-RXV-T4/2-2G	25	50	400	5,6	2,2	254	657,5	373,5	170	37,1	42,4
4077263	MULTI-VE806-OSE-T4/2-2G	16	50	400	9,7	4	284	807,5	473,5	220	52,8	58,1
4077273	MULTI-VE806-FSE-T4/2-2G	25	50	400	9,7	4	284	807,5	473,5	220	53,2	58,5
4077299	MULTI-VE806-FXV-T4/2-2G	25	50	400	9,7	4	284	807,5	473,5	220	53,2	58,5
4077307	MULTI-VE806-RXV-T4/2-2G	25	50	400	9,7	4	284	807,5	473,5	220	53,2	58,5
4122285	MULTI-VE808-OSE-T4/2-2G	16	50	400	11	5,5	308,5	933	553	262	80,6	90,6
4122289	MULTI-VE808-FSE-T4/2-2G	25	50	400	11	5,5	308,5	933	553	262	79,9	89,9
4122297	MULTI-VE808-FXV-T4/2-2G	25	50	400	11	5,5	308,5	933	553	262	79,9	89,9
4122290	MULTI-VE811-FSE-T4/2-2G	25	50	400	14,5	7,5	296	1053	673	262	86,9	96,9
4122298	MULTI-VE811-FXV-T4/2-2G	25	50	400	14,5	7,5	296	1053	673	262	86,9	96,9

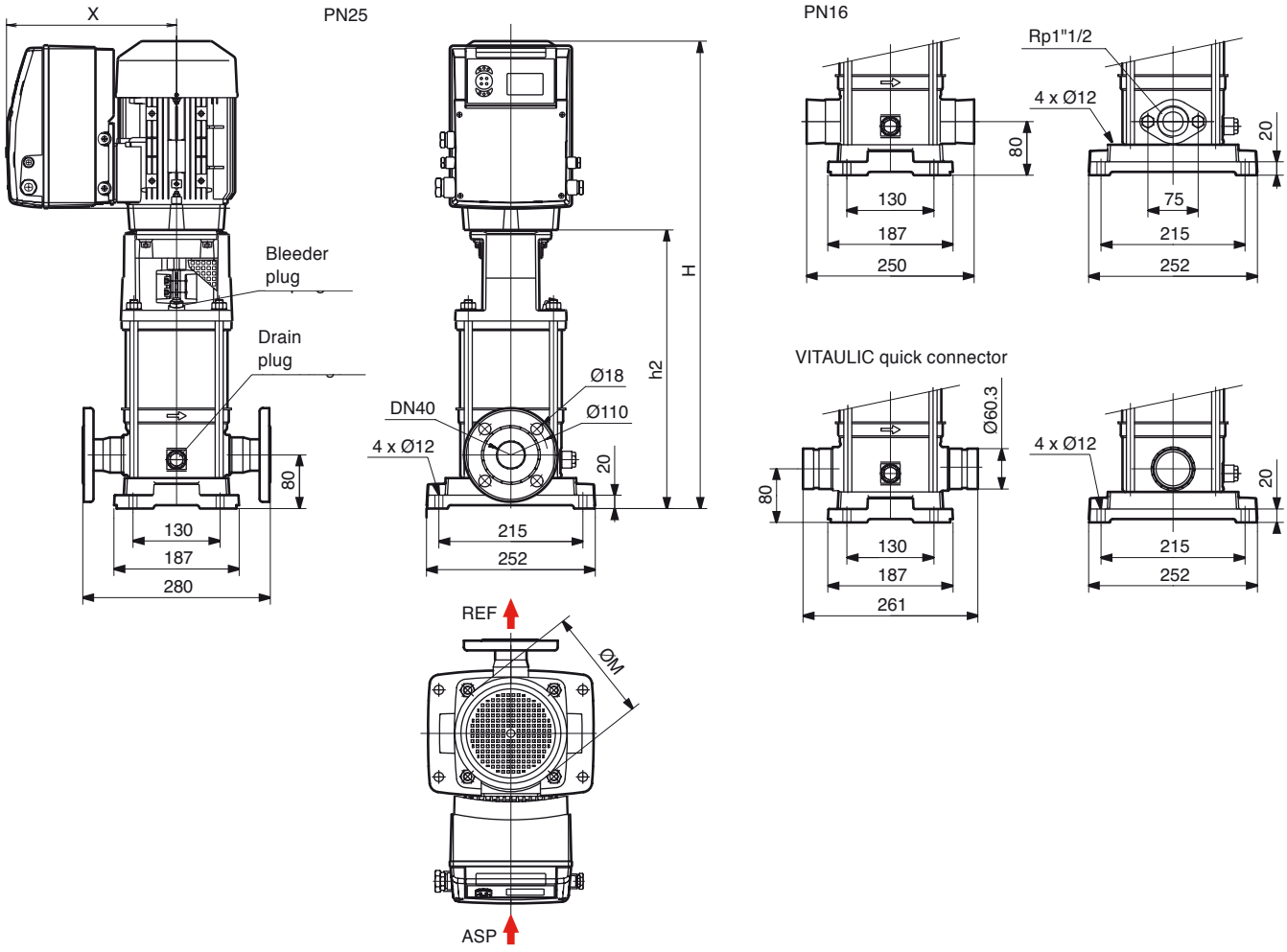

MULTI VE THREE-PHASE

ELECTRICAL AND DIMENSIONAL SPECIFICATIONS

• **8000 SERIE**

Order reference	Designation		Freq.	Voltage	Intensity	P2	X	H	H2	ØM	Mass in kg	
		PN	Hz	V	A	kW	mm	mm	mm	mm	without pack.	with pack.
4122315	MULTI-VE8001-OGE-T4/2-2G	16	50	400	11,4	5,5	308,5	939	559	262	133,9	148,9
4122321	MULTI-VE8001-FGE-T4/2-2G	25	50	400	11,4	5,5	308,5	939	559	262	133,9	148,9
4122316	MULTI-VE8002/2-OGE-T4/2-2G	16	50	400	15	7,5	296	1024	644	262	141,9	156,9
4122322	MULTI-VE8002/2-FGE-T4/2-2G	25	50	400	15	7,5	296	1024	644	262	141,9	156,9
4166151	MULTI-VE8002-OGE-T4/2-2G	16	50	400	21,2	11	398	1223	757	302	202,5	217,5
4166163	MULTI-VE8002-FGE-T4/2-2G	25	50	400	21,2	11	398	1223	757	302	202,5	217,5
4166152	MULTI-VE8003/1-OGE-T4/2-2G	16	50	400	25,4	15	398	1308	842	302	198,5	213,5
4166164	MULTI-VE8003/1-FGE-T4/2-2G	25	50	400	25,4	15	398	1308	842	302	198,5	213,5
4166153	MULTI-VE8004/2-OGE-T4/2-2G	16	50	400	33,6	18,5	398	1393	927	302	224	239
4166165	MULTI-VE8004/2-FGE-T4/2-2G	25	50	400	33,6	18,5	398	1393	927	302	224	239
4166154	MULTI-VE8004-OGE-T4/2-2G	16	50	400	43,9	22	398	1393	927	302	225	240
4166166	MULTI-VE8004-FGE-T4/2-2G	25	50	400	43,9	22	398	1393	927	302	225	240

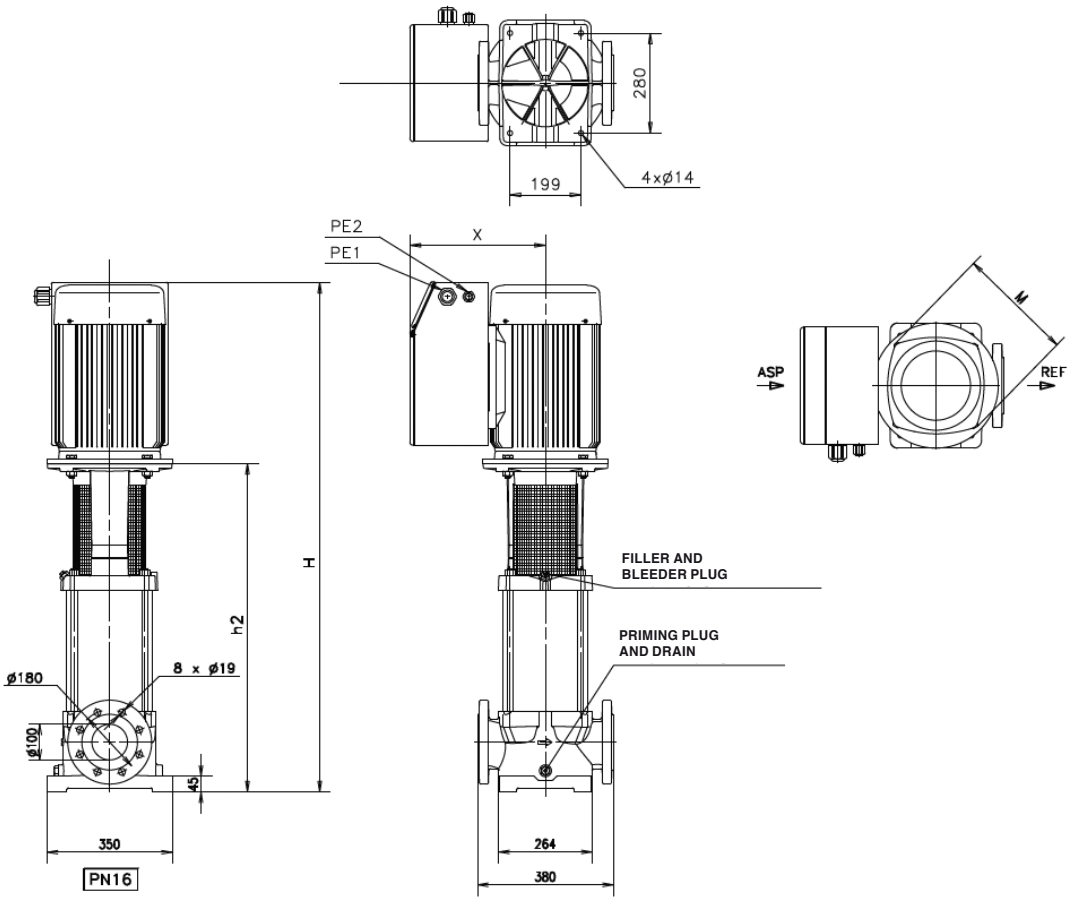

SERIE	Max. operating pressure	2 pole motor	Flanges suction/Delivery
MULTI-VE 8000	16 bar	•	DN 100
	25 bar	•	DN 100

ELECTRICAL AND DIMENSIONAL SPECIFICATIONS

• 10 000 SERIE

Order reference	Designation		Freq.	Voltage	Intensity	P2	X	H	H2	ØM	Mass in kg	
		PN	Hz	V	A	kW	mm	mm	mm	mm	without pack.	with pack.
4122323	MULTI-VE10001/1-OGE-T4/2-2G	16	50	400	13,3	7,5	296	952	572	262	138,4	153,4
4122325	MULTI-VE10001/1-FGE-T4/2-2G	25	50	400	13,3	7,5	296	952	572	262	138,4	153,4
4166167	MULTI-VE10001-OGE-T4/2-2G	16	50	400	21,2	11	398	1151	685	302	199	214
4166175	MULTI-VE10001-FGE-T4/2-2G	25	50	400	21,2	11	398	1151	685	302	199	214
4166168	MULTI-VE10002/1-OGE-T4/2-2G	16	50	400	25,4	15	398	1249	783	302	196,5	211,5
4166176	MULTI-VE10002/1-FGE-T4/2-2G	25	50	400	25,4	15	398	1249	783	302	196,5	211,5
4166169	MULTI-VE10002-OGE-T4/2-2G	16	50	400	33,6	18,5	398	1249	783	302	218	233
4166177	MULTI-VE10002-FGE-T4/2-2G	25	50	400	33,6	18,5	398	1249	783	302	218	233
4166170	MULTI-VE10003/2-OGE-T4/2-2G	16	50	400	43,9	22	398	1347	881	302	223,5	238,5
4166178	MULTI-VE10003/2-FGE-T4/2-2G	25	50	400	43,9	22	398	1347	881	302	223,5	238,5

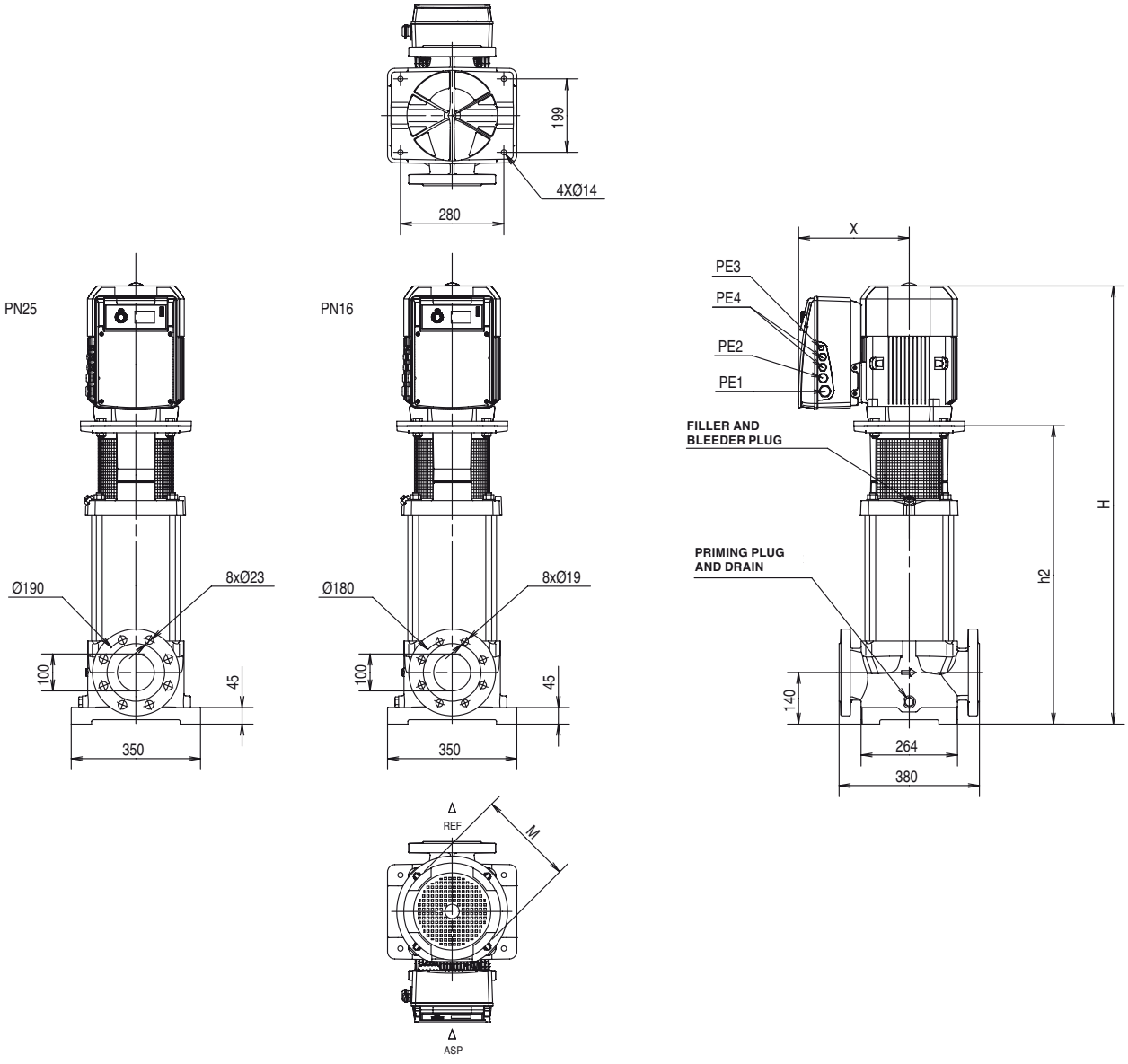

MULTI VE THREE-PHASE

SENSOR KIT: MOUNTING ACCESSORY

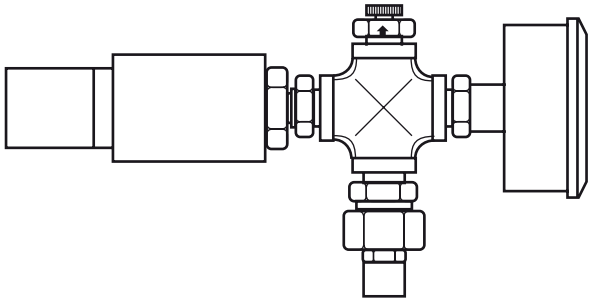

Sensor kit	Model	Order reference	Item reference
6 bars	MULTi-VE 403	captpress 6b	4048063
10 bars	MULTi-VE 204	captpress 10b	4048064
	MULTi-VE 803		
	MULTi-VE 3602		
	MULTi-VE 3603		
16 bars	MULTi-VE 208	captpress 16b	4048065
	MULTi-VE 406		
	MULTi-VE 806		
	MULTi-VE 6002		
25 bars	MULTi-VE 214	captpress 25b	4048066
	MULTi-VE 410		
	MULTi-VE 414		
	MULTi-VE 808		
	MULTi-VE 811		

Above 7.5 kW, the pressure sensor is powered by an external box not supplied

FEATURES

a) Electrical

– Three-phase 380V / 400V - 50/ 60 hz.

b) Fitting

– Installation in an easily accessible place. For heavy pumps, provide a hoisting hook on the pump axis to allow for easy dismantling.
– Mounting on a > 10cm tall concrete block, fixing by anchor bolts.
– Pump axis always horizontal.

Connection to the system using «Victaulic» quick connectors or backflanges.

c) Packaging

– Oval-flanged pumps: supplied with cast-iron oval back flanges for screw-on pipe, gaskets and bolts.
– Round-flanged pumps: supplied with gaskets and bolts, without backflanges (optional).
– Pumps with quick connectors for “Victaulic” collars: supplied without collars (optional).

RECOMMENDED ACCESSORIES

– Shut-off valves.
– Screw-on or weld-on back flanges (steel or stainless steel).
– “Victaulic”-type quick connectors.
– Vibration-damping sleeves.
– Bladder or galvanised tank.
– Surge tank.
– Non-return valves (with cone or flap, with spring if operating in Mode 2).
– Strainer foot valve.
– Low-water protection kit (Mode 1).
– Regulating pressure sensor kit.

OPERATING RANGES

Flow rates of up to:	**20 m³/h**
Manometric heads of up to:	**125 mCE**
Operating pressure:	**16 bar**
Max. water temperature:	**+ 50°C**
Ambient temperature:	**+ 40°C**

MULTI-VE HYDROMINI

BOOSTER PUMPS

Domestic and small-scale collective uses with integrated EVS* 50 / 60 Hz

*** Electronic Variation Speed**

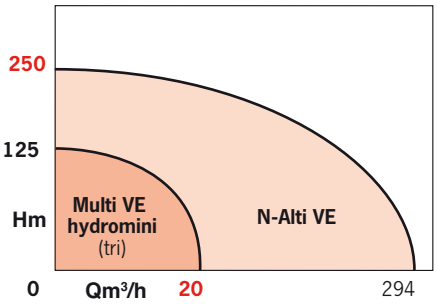

APPLICATIONS

Pressure maintenance for water distribution systems with insufficient or non-existent pressure, for:

- Water supply and distribution from a mains system or storage tank.
- Irrigation.
- Watering.

For detached houses, small buildings, hospitals, etc.

ADVANTAGES

- **Compact, pre-assembled modules ready for fitting.**
- **Easy installation: one electrical connection and two hydraulic connections.**
- **Automatic operation and regulation of delivery pressure.**
- **Tank with interchangeable bladders.**
- **Energy savings and quiet operation due to the continuous adjustment of pump performance.**
- **Flexibility of use with smoother operation and less water hammer.**

EVS

Certified ACS



• MULTI-VE-403-T-V8-2G

MULTI-VE HYDROMINI

DESIGN

Automatic booster pumps, pre-assembled and ready for fitting.

• Hydraulic part:

- Vertical, centrifugal, not-self-priming.
- Multi-stage, 3 to 8 stages.
- Lower shaft guide bearing above the second stage.
- Standardised mechanical seal ensures leak-tightness of shaft passage.

• Motor

- Integrated thermal protection with automatic reset.
- Dry, single-phase motor, 2 poles, equipped with EVS.

Speed:	Variable
Voltage:	400V ± 10%, 50Hz
	380V ± 10%, 60Hz
Insulation class:	155 (F)
Protection :	IP 55

BASIC CONSTRUCTION

Main parts	Material
MULTI-VE 200-400-800 pumps	304 stainless steel
Frame	Steel (corrosion-resistant coating)
1/4-turn valve	Brass
Non-return valve	Brass

IDENTIFICATION

MULTI-VE 2 04-T-V8 - 2G

- Series code
- Nominal flowrate in m^3/h
- Number of stages
- T = Three-phase
- Tank size in litres
- 2nde generation

PRINCIPLE

Three pump operating modes may be chosen. On delivery, the pump will be configured in mode 2 (Automatic). However, modes 1 (Manual) and 3 (external control 0 - 10V or 4 - 20 mA) may be selected.

Mode 2 / automatic boosting system with one pump

Pump mode alone for pressure regulation. The pump is installed with its pressure sensor which is attached to the pump delivery pipe.

The set point pressure value is set when the module is installed using a potentiometer on the front panel.

Operation

When the actual pressure, measured by the sensor, drops below the setpoint pressure, the pump starts up and regulates its speed in order to achieve the setpoint pressure. The pump stops automatically whenever it detects a zero flow rate or a lack of water.

DESCRIPTION OF BOOSTER PUMP

1. MULTi-VE Three-phase pump (204 - 208 - 403 - 406 - 803 - 806)
2. 16 bar pressure sensor
3. Frame (with vibration-damping blocks)
4. Tank with interchangeable 8 litre, 16 bar bladder
5. Pressure gauge
6. Non-return valve
7. Shut-off valve on delivery
8. Vibration-damping sleeve*
9. Three-pole isolating switch*
10. Low mains water protection* (also available: storage tank water kit)

*: optional

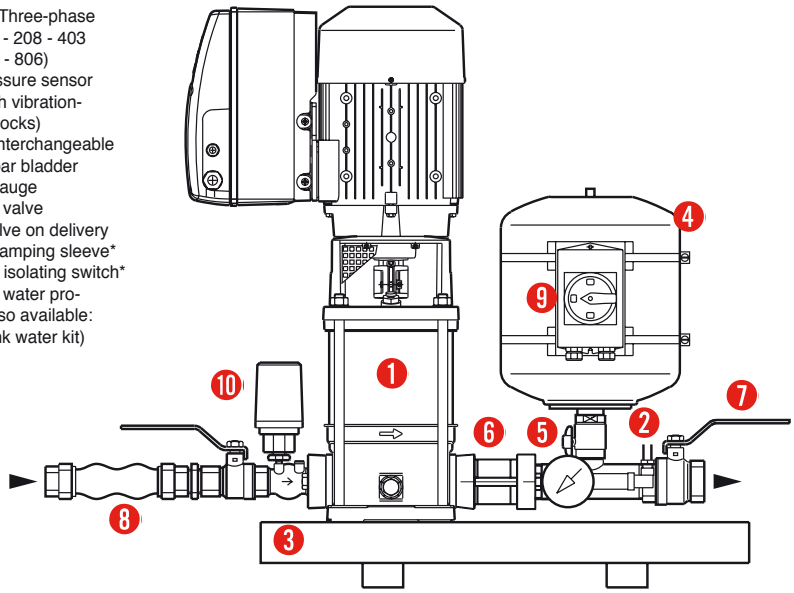

INSTALLATION DIAGRAM

Water supply from storage tank or mains supply.

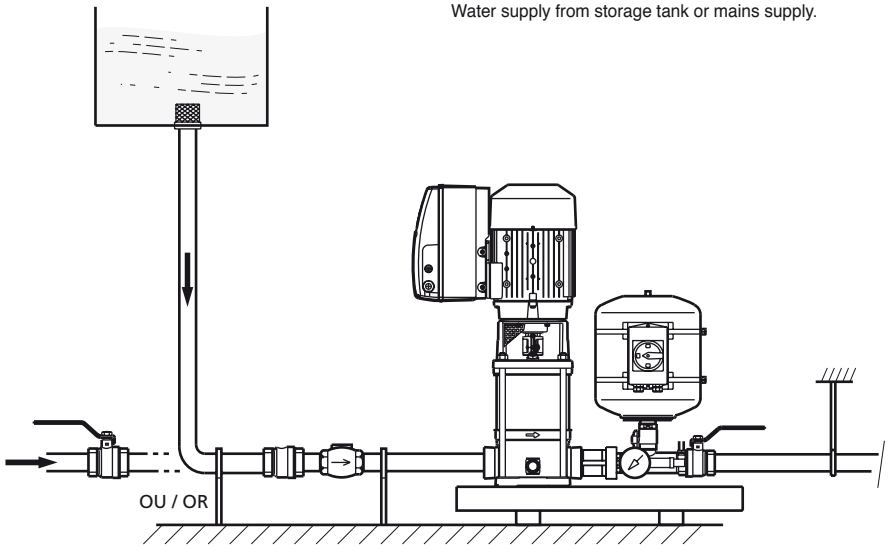

HYDRAULIC PERFORMANCES

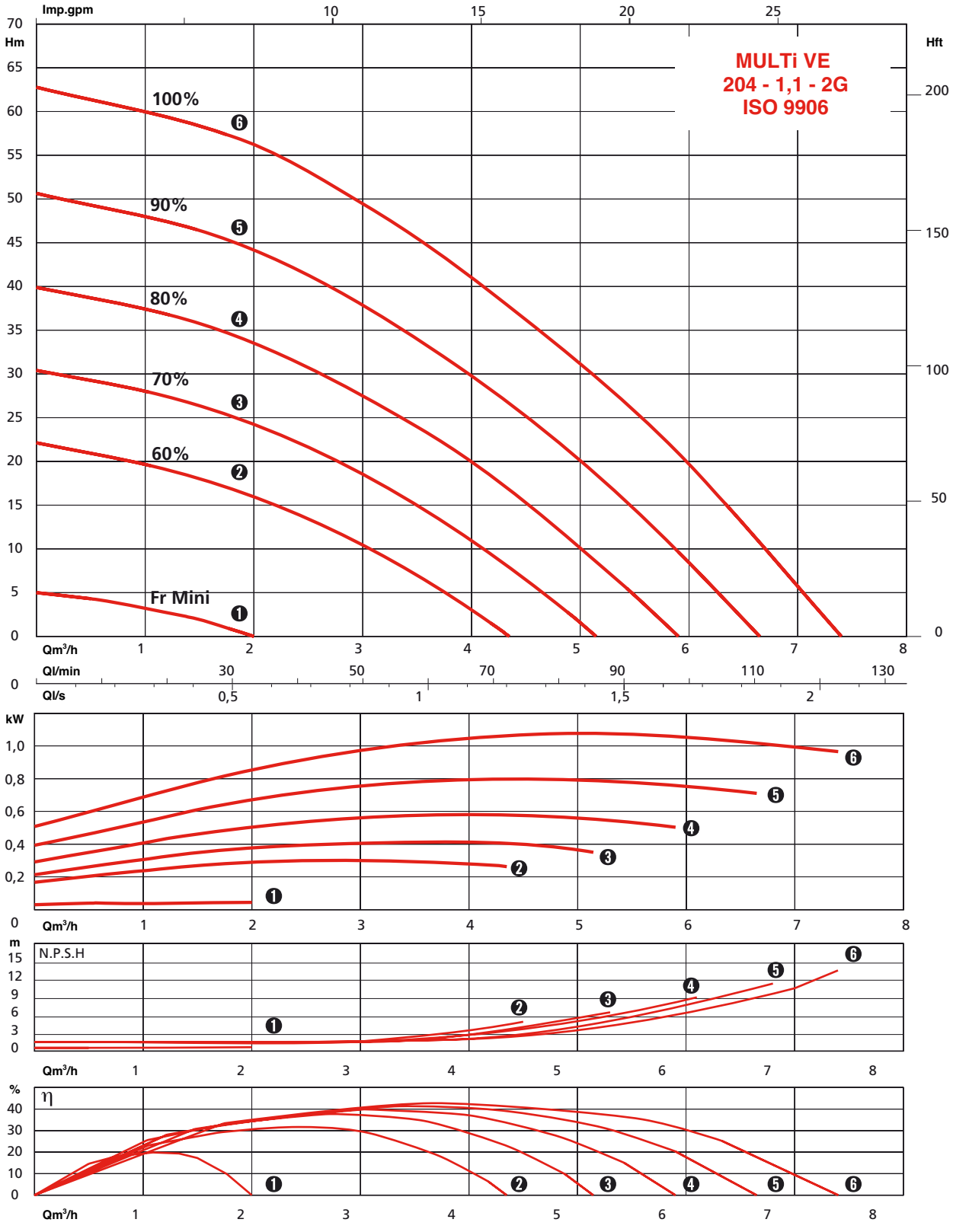

MULTI-VE HYDROMINI

HYDRAULIC PERFORMANCES

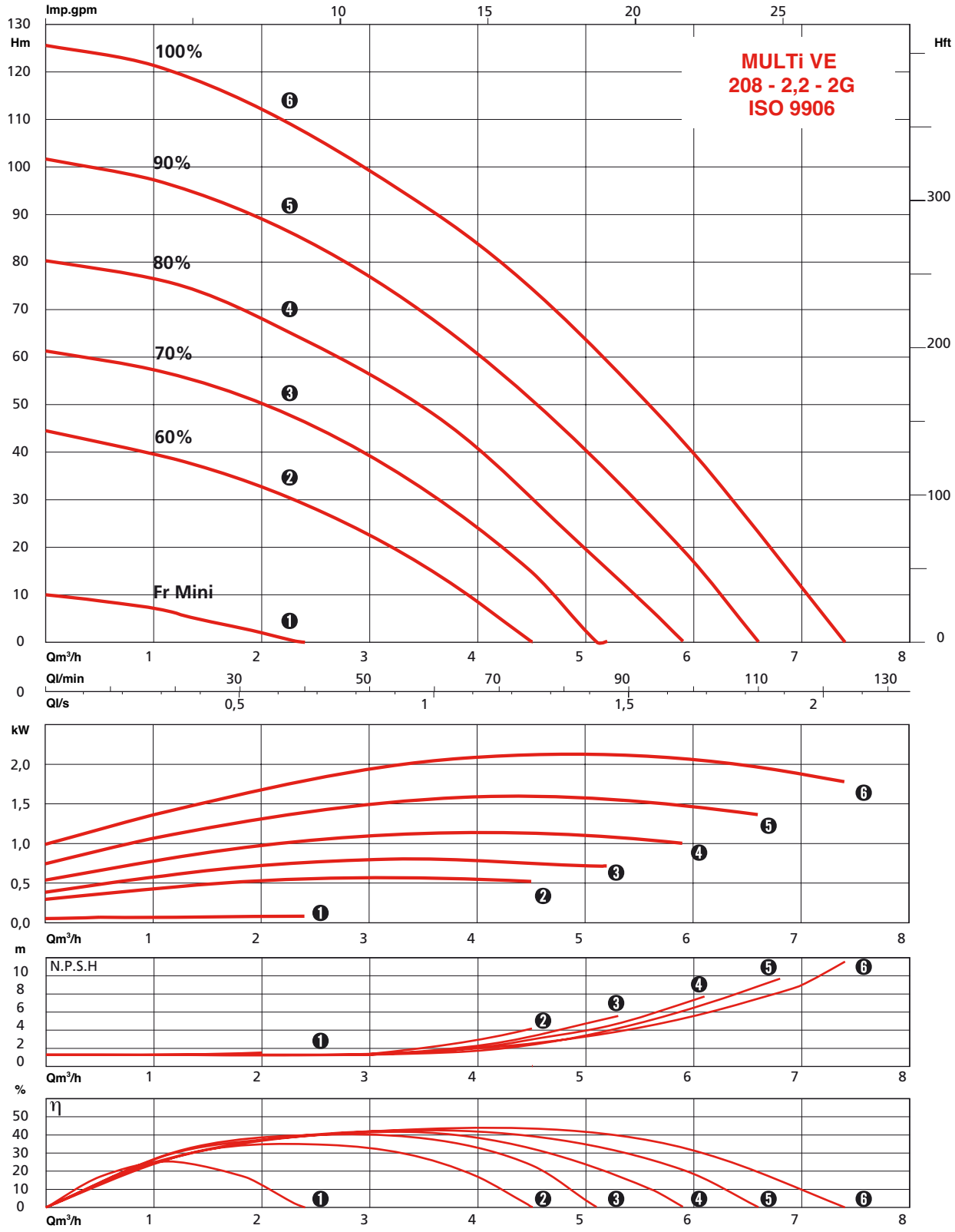

HYDRAULIC PERFORMANCES

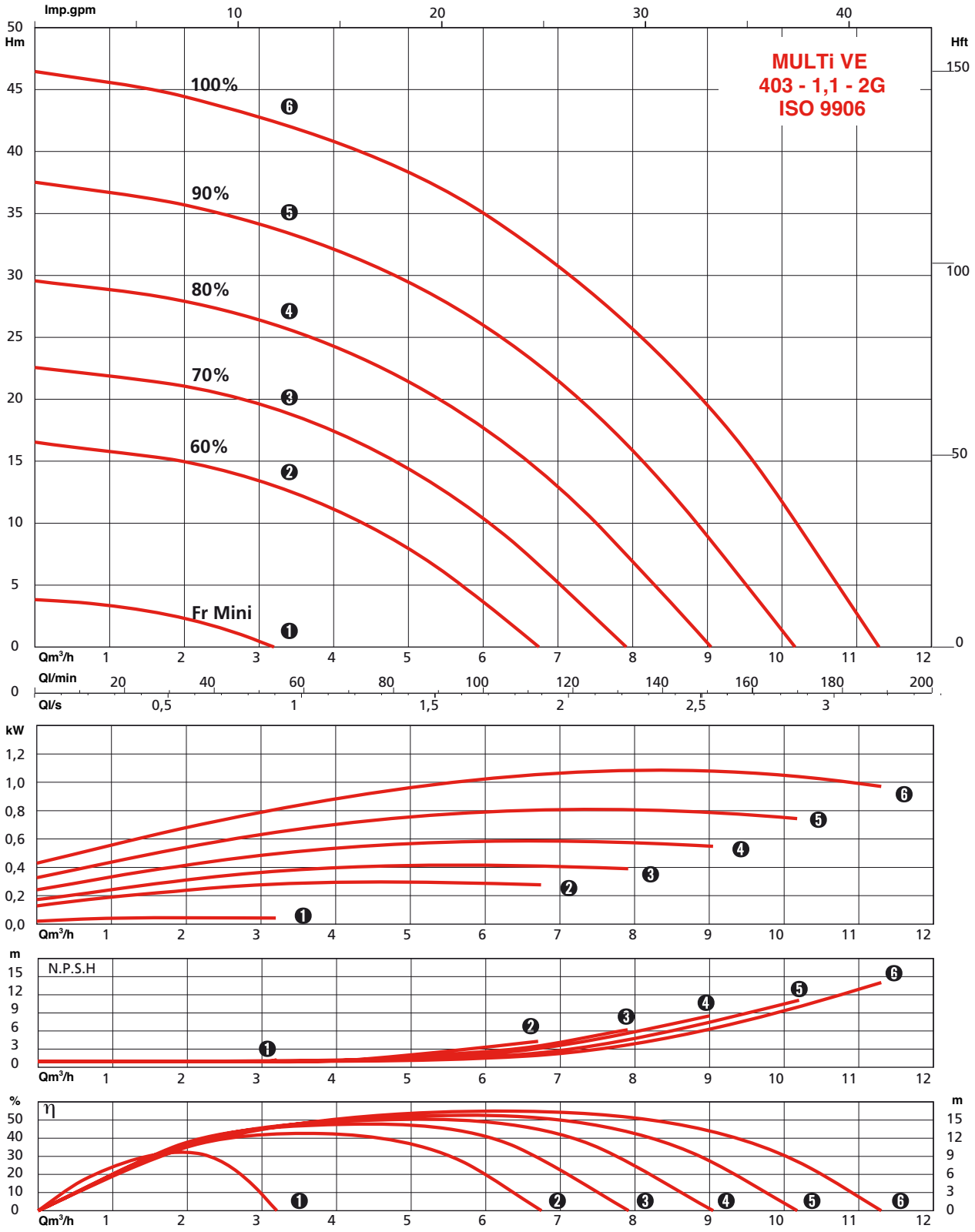

MULTI-VE HYDROMINI

HYDRAULIC PERFORMANCES

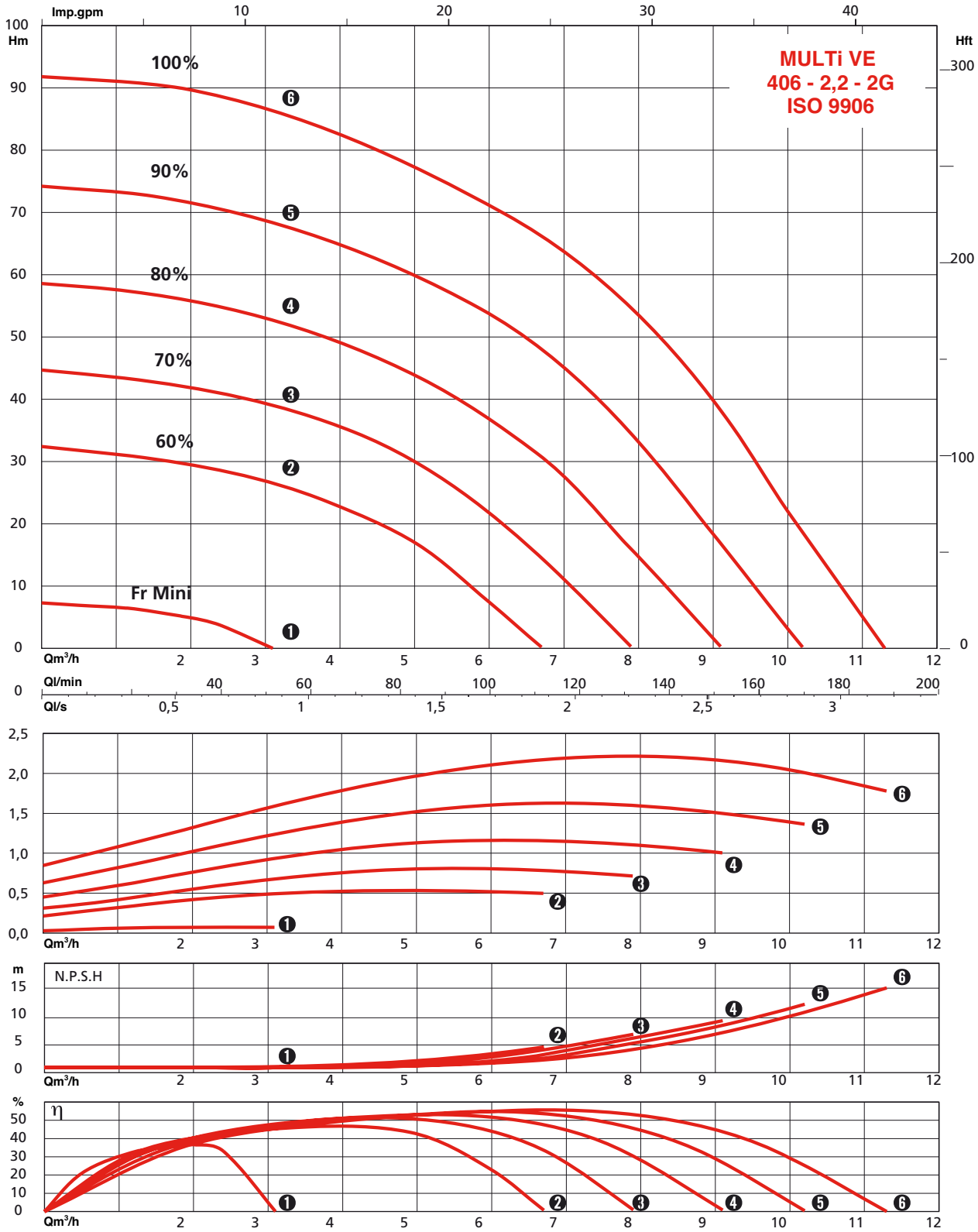

HYDRAULIC PERFORMANCES

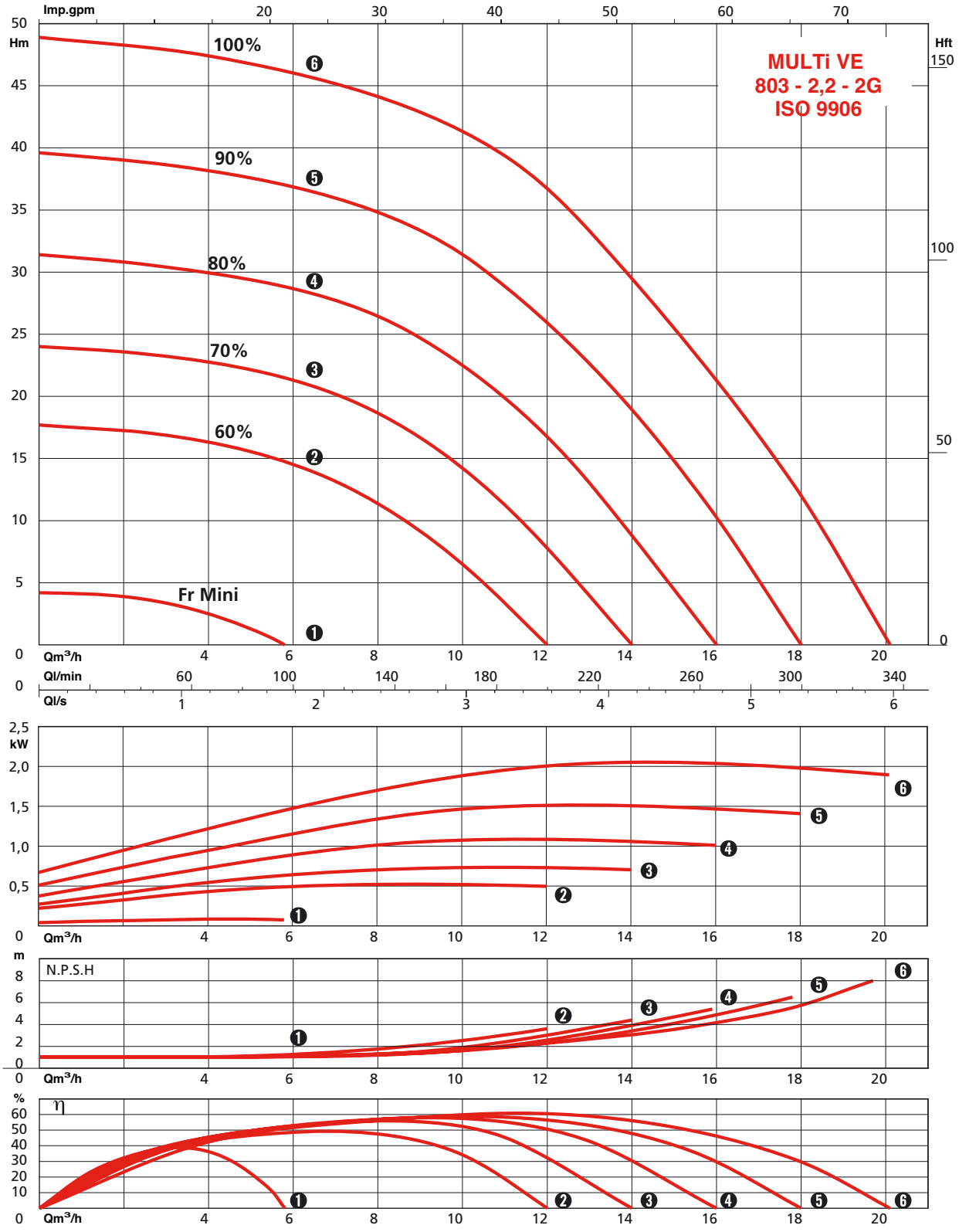

MULTI-VE HYDROMINI

HYDRAULIC PERFORMANCES

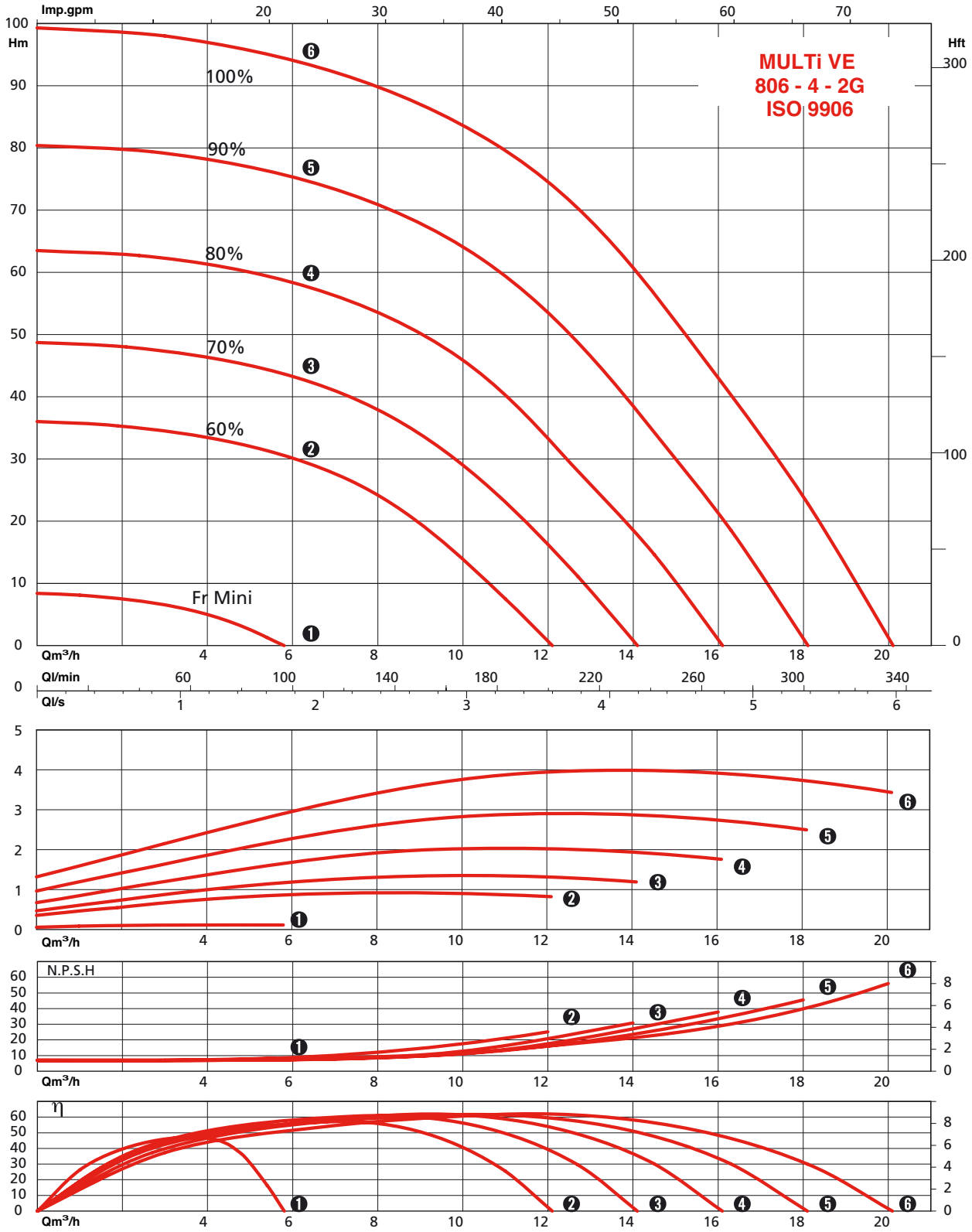

ELECTRICAL AND DIMENSIONAL SPECIFICATIONS

· HYDROMINI MULTI-VE 200/400/800

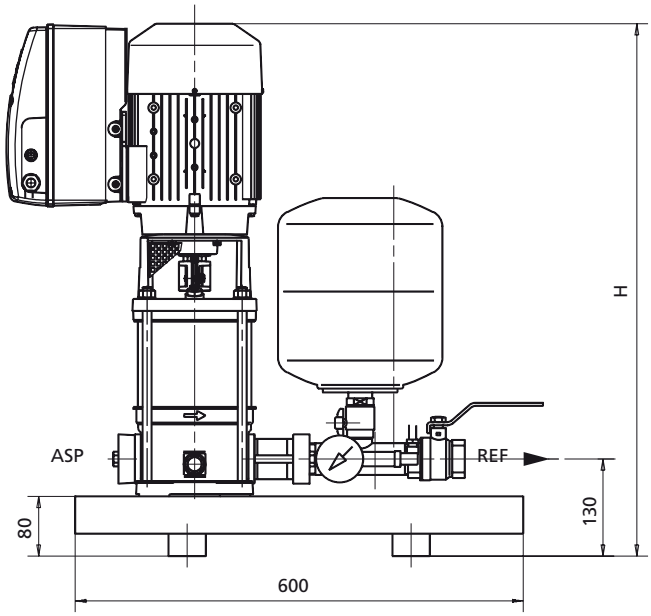

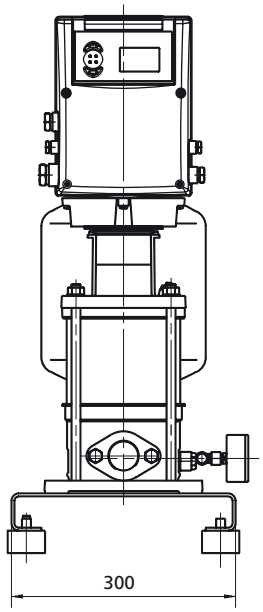

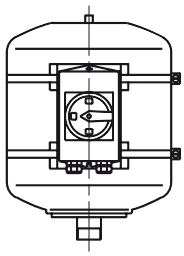

Three-pole isolating switch

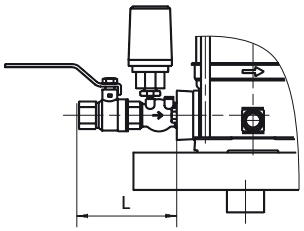

Low mains water kit

Reference	In (A)	In (A)	In (A)	Attachment	P1	P2	H	L	Ø Suction	Ø Disch.
	50Hz-3x400V	60Hz-3x380V	60Hz-3x440V	Motor	kW	kW	mm	mm		
MULTi-VE 204-T-V8-2G	4,2	2,8	2,9	TL3FT115	1,55	1,1	635	122,5	1"1/4	1"1/4
MULTi-VE 208-T-V8-2G	6,1	4,9	4,4	TL3FT115	2,85	2,2	735	122,5	1"1/4	1"1/4
MULTi-VE 403-T-V8-2G	4,4	2,9	3	TL3FT115	1,55	1,1	610	122,5	1"1/4	1"1/4
MULTi-VE 406-T-V8-2G	6,1	5,2	4,7	TL3FT115	2,85	2,2	710	122,5	1"1/4	1"1/4
MULTi-VE 803-T-V8-2G	5,9	48	4,2	TL3FT115	2,85	2,2	720	134,5	1"1/2	1"1/2
MULTi-VE 806-T-V8-2G	10,2	7,8	7,6	TL3FT130	5,2	4	790	134,5	1"1/2	1"1/2

MULTI-VE HYDROMINI

ACCESSORIES

- Low mains water kit (with 1 pressure switch, 1 non-return valve and 1 valve).
- Low water kit for storage tank installation.
- Three-pole isolating switch
- Vibration-damping sleeves

• Low water kit for storage tank installation.





• Vibration-damping sleeve

• Low-water protection kit for connection to the mains system



• Three-pole isolating switch kit



FEATURES

a) Fitting

- On a smooth floor or on a solid concrete base.

b) Packaging

- On a platform with cardboard packaging

OPERATING LIMITS

Flow rates up to:	**10 m³/h**
Head up to:	**65 mCE**
Max. discharge pressure:	**16 bar**
Max. water temperature:	**+ 50°C**
Max. ambient temperature:	**+ 40°C**

HYDROMINI MULTI-VE (1-PHASE)

BOOSTERS
Domestic and small-scale collective uses with integrated EVS* 50/60 Hz

***Electronic Variation Speed**

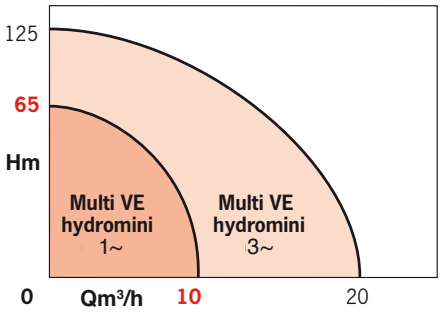

APPLICATIONS

Pressure boosting in a distribution network where there is too low or none pressure, in a domestic or small-scale collective context:

- Water supply and distribution from a town network or a storage tank.
- Irrigation
- Sprinkling

For detached houses, small buildings, hotels, hospitals…

ADVANTAGES

- **Boosters entirely assembled, wired and preset, ready to use.**
- **Easy installation: an electrical connection and two hydraulic connections.**
- **Automatic operation, discharge pressure regulation.**
- **Tank with interchangeable bladder in Butyl.**
- **Energy saving and sound levels reduction by adapting pump speed to requirements.**
- **Flexible use, reduction of hammering and knocking.**

Certified ACS

EVS



• MULTI-VE-403-M-V8

HYDROMINI MULTI-VE (1-PHASE)

DESIGN

Pre-assembled automatic boosters, ready to be installed.

• Hydraulic part
- Centrifugal with vertical axis, no self-priming
- Multi-stage with 3 to 4 stages.
- Lower guide bearing above 2nd stage.
- Standard mechanical seal.

• Motor
- Thermal protection and automatic reset.
- Dry motor 1~, 2 pole, equipped with E.V.S.

Rotation speed:	Variable
according to winding:	220 to 240V ± 6%
Frequency:	50 and 60 Hz
Insulating category:	155 (F)
Protection index:	IP 55

IDENTIFICATION

MULTI-VE 2 04-M-V8

- Pump code
- Nominal flow in m³/h
- Number of stages
- M = 1-phase
- Vessel size in litre

OPERATION

Mode 2 / Automatic pump boost system

Pump alone using pressure regulation. The pump is installed with its pressure sensor which can attached either on the discharge pipe. Once the pump is installed, pressure is adjusted through touch pad.

Operation:

When the real pressure measured on the sensor drops below the set pressure, the pump starts and controls its speed to achieve the set pressure. The pump stops automatically when it detects zero flow.

STANDARD CONSTRUCTION

Main parts	Material
Pumps Multi-VE 200/400	Stainless steel 304
Non-return valve	Brass

BOOSTER DESCRIPTION

1. Pump MULTI-VE (204; 403)
2. Sensor kit (10 bar)
3. Vessel with interchangeable bladders 8L, 16b
4. Pressure gauge
5. Non-return valve
6. Dry running protection kit for town network* (also available for storage tank)

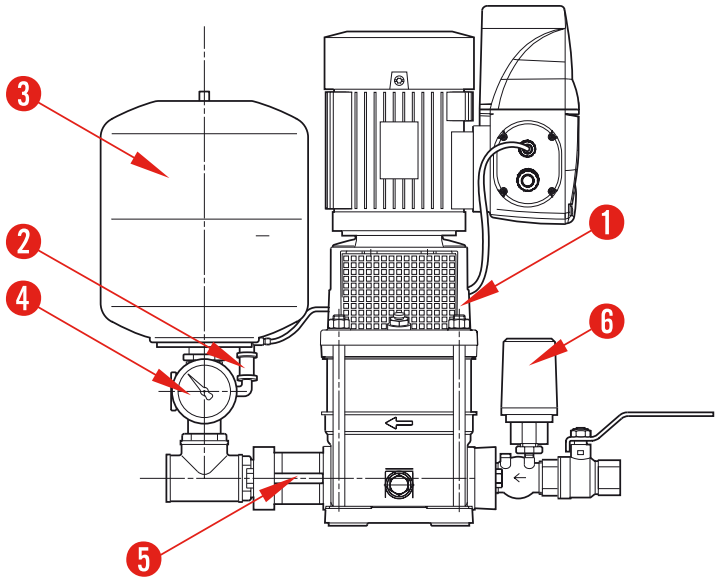

INSTALLATION DIAGRAM

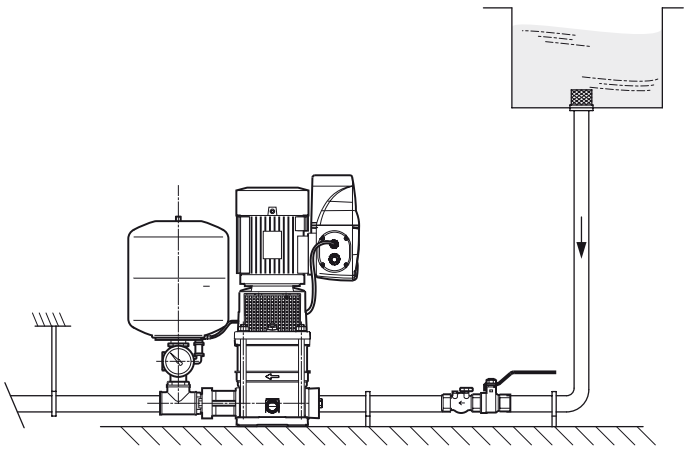

Water supply on storage tank.

OU / OR

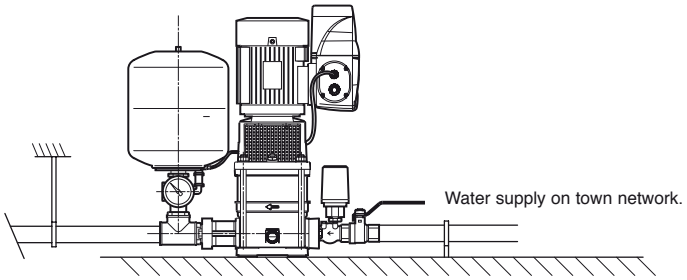

Water supply on town network.

HYDROMINI MULTI-VE (1-PHASE)

HYDRAULIC PERFORMANCES

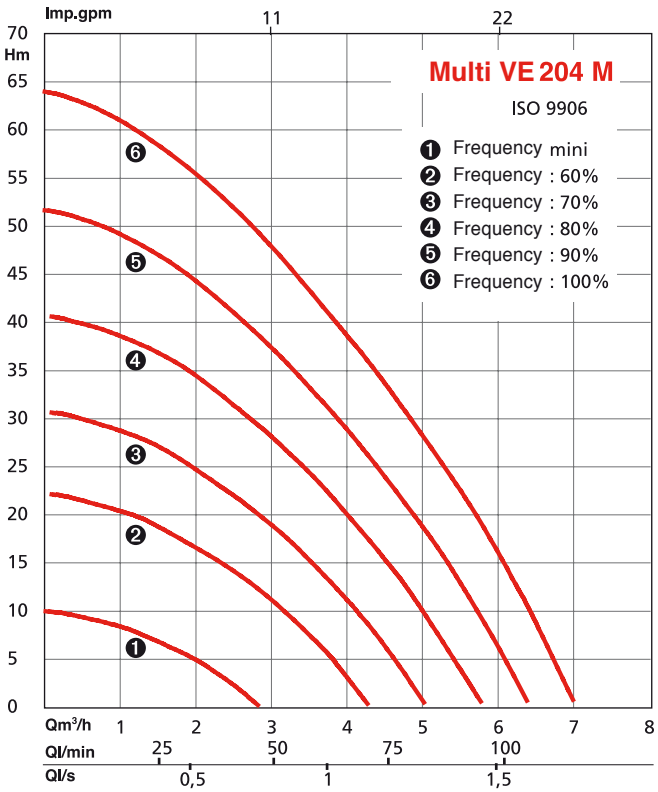

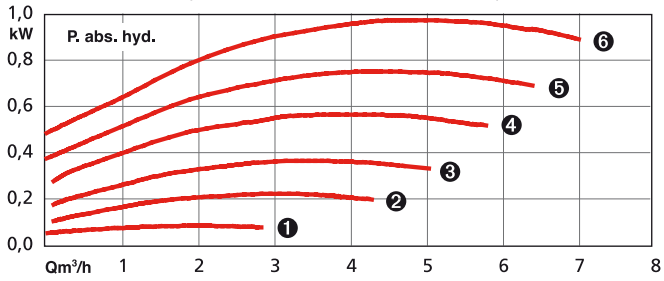

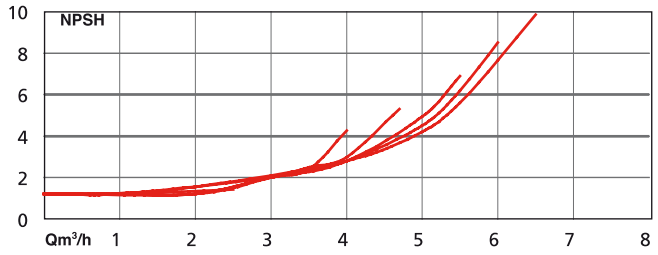

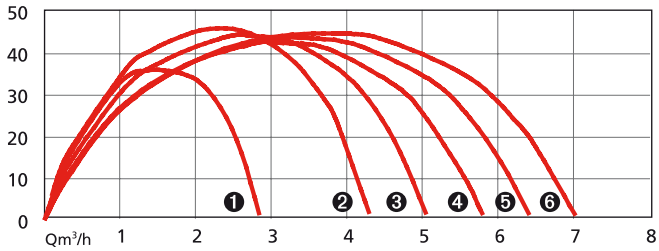

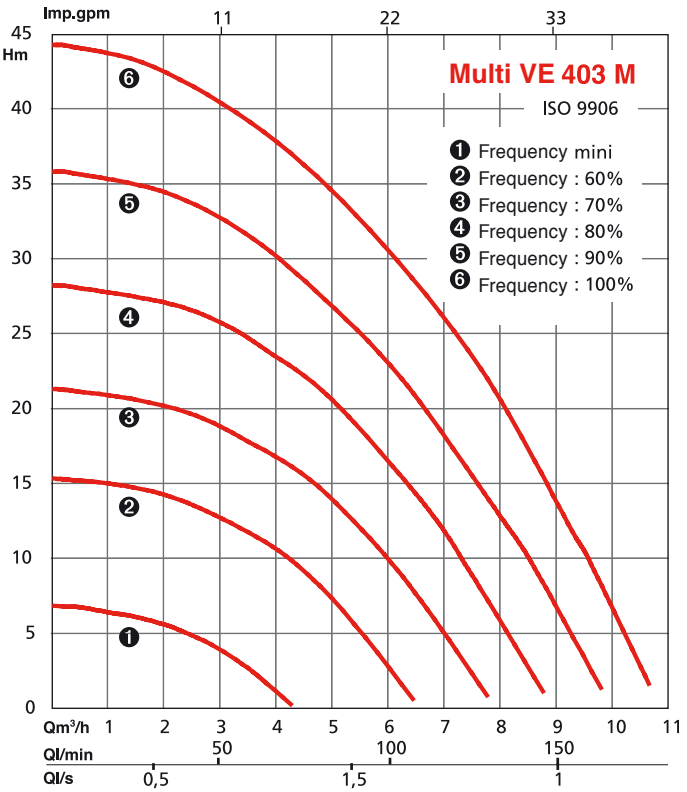

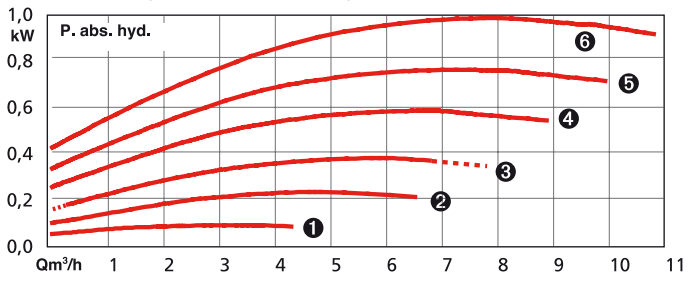

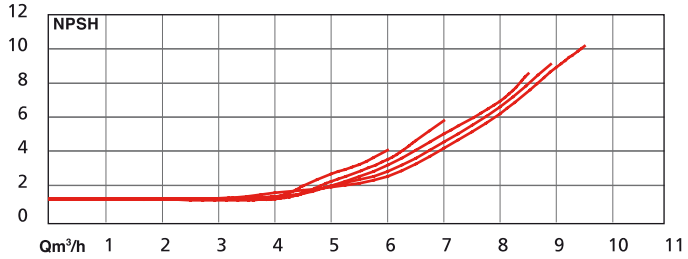

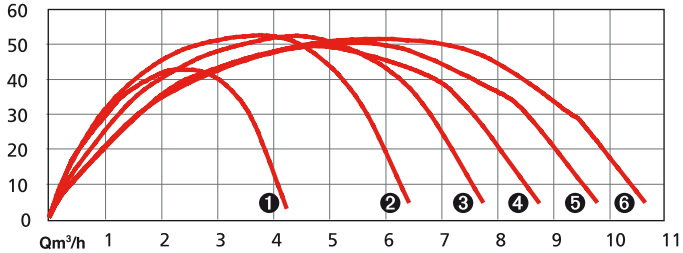

HYDROMINI MULTI-VE (1-PHASE)

ELECTRICAL DATA AND DIMENSIONS

• HYDROMINI MULTI-VE 200/400

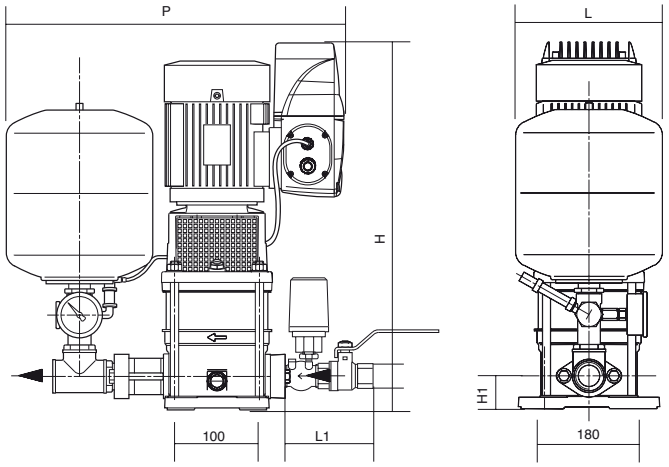

Dry running protection kit
for town network (option)

	P2	FrEq.	Voltage	Intensity	H	L	L1	P	H1	Suc.	Dis.
	kW	Hz	V	A	mm	mm	mm	mm	mm		
Multi-VE 204-M-V8	1,1	50	1x230	13,2	597,5	220	122,5	500	75	1"1/4	1"1/4
		60	1x230	13,5							
		60	1x230	12,7							
Multi-VE 403-M-V8	1,1	50	1x230	13,2	573,5	220	122,5	500	75	1"1/4	1"1/4
		60	1x230	13,5							
		60	1x230	12,7							

FEATURES

a) Installation

- On smooth floor or concrete block.

b) Packaging

- On pallet with carton packing.

RECOMMENDED ACCESSORIES

mandatory

- Dry running protection kit for town network (with 1 pressure switch, 1 non-return valve and 1 valve).

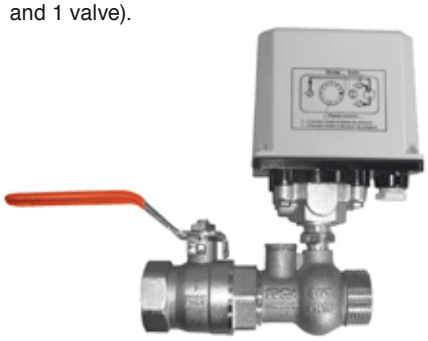

- Dry running protection kit for storage tank.



RANGE OF USE

Flow rates up to:	**16 m³/h**
Manometric head up to:	**87 m**
Maximum water temperature:	**+ 40°C**
Maximum sand content:	**50 g/m³**
Nominal diameter of output hole:	**1"1/4**

AQUASON

5" STAINLESS STEEL SUBMERSIBLE PUMP

Supplying - Watering - Boosting
2 poles - 50Hz

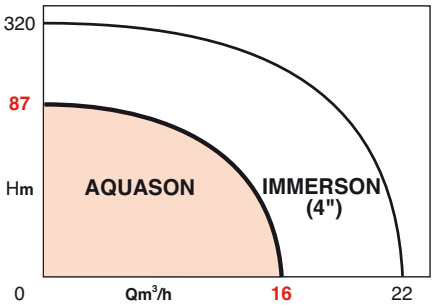

APPLICATIONS

Pumping and distributing clean, not muddy, water for various domestic uses:
- Supplying – Distributing water.
- Watering – Small-scale irrigation.
- Supplying fountains.
- Boosting.
- Pumping out rainwater.

Pumping from a shallow well, tank, cistern, etc...

Not to be used for draining swimming-pools or as heat pump.

ADVANTAGES

- **Exceptional life expectancy due to its stainless all-steel design.**
- **Easy to install: supplied with 20m of plug-in electrical cable, electrical box with protection against power spikes and plug.**
- **Absolutely waterproof and insulated motor with double mechanical seal (SIC/SIC).**
- **Pump may be installed on the surface.**
- **Very quiet operation.**
- **Water-cooled motor.**
- **Motor supply cable can be unplugged for easy maintenance.**
- **AL (Side Intake) version.**
- **The intake filter with float draws on cleaner water without deposits or particles.**
- **Version F with built-in float switch.**
- **ACS Certification available for models 30X and 90X.**

• AQUASON F pump



• AQUASON AL PAP pump



• AQUASON pump



• AQUASON AL pump



• Plug-in cable



AQUASON

DESING

• Hydraulic part

- Monobloc, common pump-motor shaft.
- Multi-stage all stainless steel with radial impellers, from 3 to 8 stages.
- Vertical output.
- Intake by suction mesh or side intake to add a floating filter or direct connexion to the mains water system.

• Motor

- Asynchronous.
- Shaft double waterproofed by double mechanical seal.
- Stator insulated by stainless steel housing.
- Electrical cable type HO7RNF, 20 m long, with connector to plug into motor.
- Monophase motor with thermal protection, automatically re-settable (PTO) delivered with start-up and protection box containing on-off switch, reset button, connection terminal for float switch to prevent running dry and built-in capacitor.

Speed:	2900 rpm
Single-phase winding:	230 V
Three-phase:	400 V
Frequency:	50 Hz
Insulation class:	155 (F)
Protection class:	IP 68
Start-ups per hour:	40 maxi.
EC approved:	CE

BASIC CONSTRUCTION

Main parts	Material
Intake-suction mesh Housing	Stainless steel AISI 304
Impellers/Stages/diffusers	Stainless steel AISI 304
Shaft	Stainless steel AISI 304
Bearing support	Aluminium
Output housing	Nickel-plated brass
Ext. housing-output	Stainless steel AISI 304
Mechanical seals	Silicon carbide /silicon carbide Carbon/Ceramic

IDENTIFICATION

AQUASON - 304 M - AL - F /B

Family of pump
Nominal flow rate in m³/h
Number of stages
M - monophase 230V
T4 - three-phase 400V
AL = Side intake
-nil = Intake by suction mesh (Ø2mm)
F = with floay switch /
-nil = without float switch
Index number of technical version

CROSS-SECTION DIAGRAM

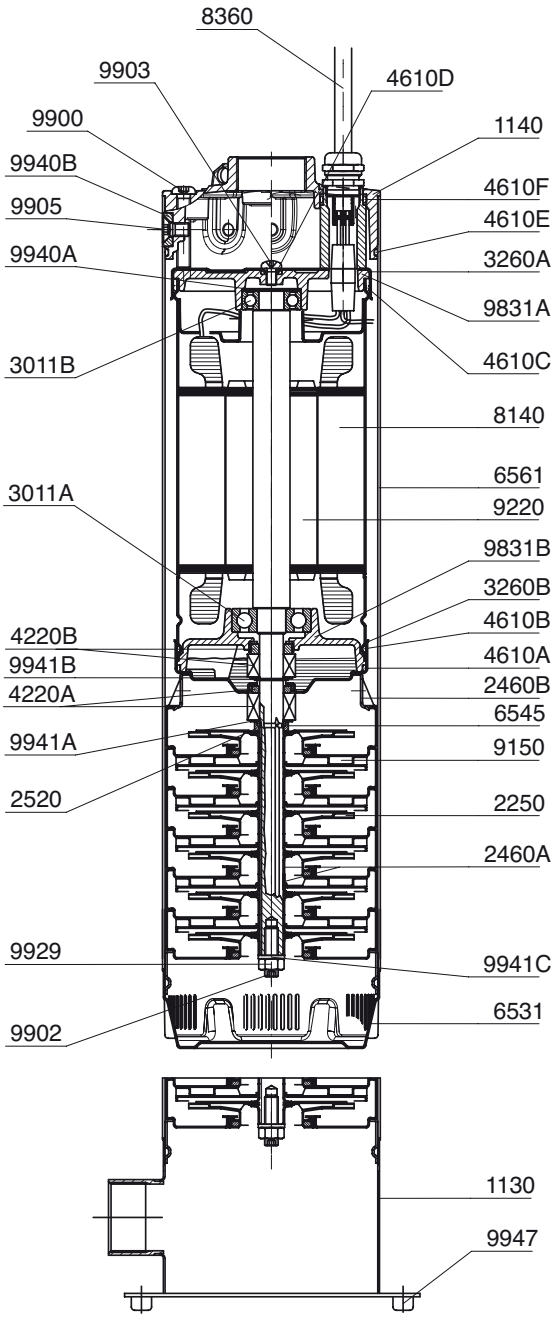

N°	Name of part
1130	Intake housing
1140	Output housing
2250	Impeller
2460A	Impeller spacers
2460B	Spacer
2520	Impeller/shaft support ring
3011A	Lower bearing
3011B	Upper bearing
3260A	Top cover
3260B	Bottom cover
4220A	Mechanical seal
4220B	Mechanical seal
4610A	O-ring
4610B	O-ring
4610C	O-ring
4610D	O-ring
4610E	O-ring
4610F	O-ring
6531	Suction strainer
6545	1/2 Circlip (impeller/seal)
6561	External housing
8140	Stator
8360	Electrical cable
9150	Stage housing with diffuser
9220	Shaft / rotor
9831A	Upper bearing
9831B	Step bearing
9900	Special screw
9902	Cheese head hexagonal socket screw
9903	Cheese head Phillips screw
9905	Countersunk head hexagonal socket screw
9929	Impeller nut
9940A	Spring washer
9940B	Special washer
9941A	Seal support washer
9941B	Seal support washer
9941C	Nut and washer
9947	Shock-absorbing washer

HYDRAULIC CHARACTERISTICS AT 2 900 RPM

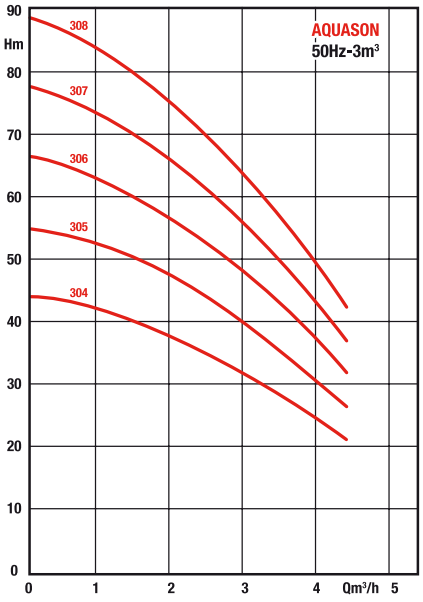

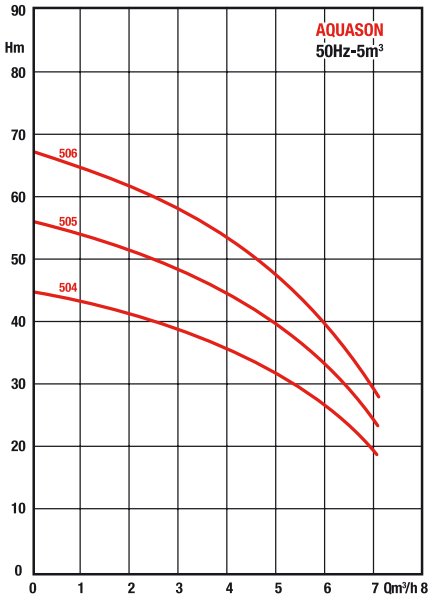

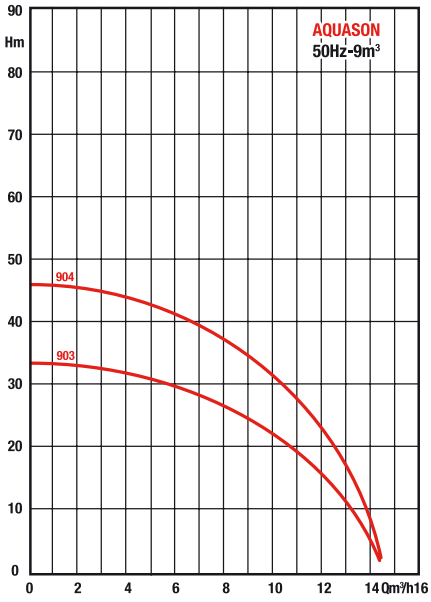

INSTALLATION DIAGRAMS (IN PRINCIPLE)

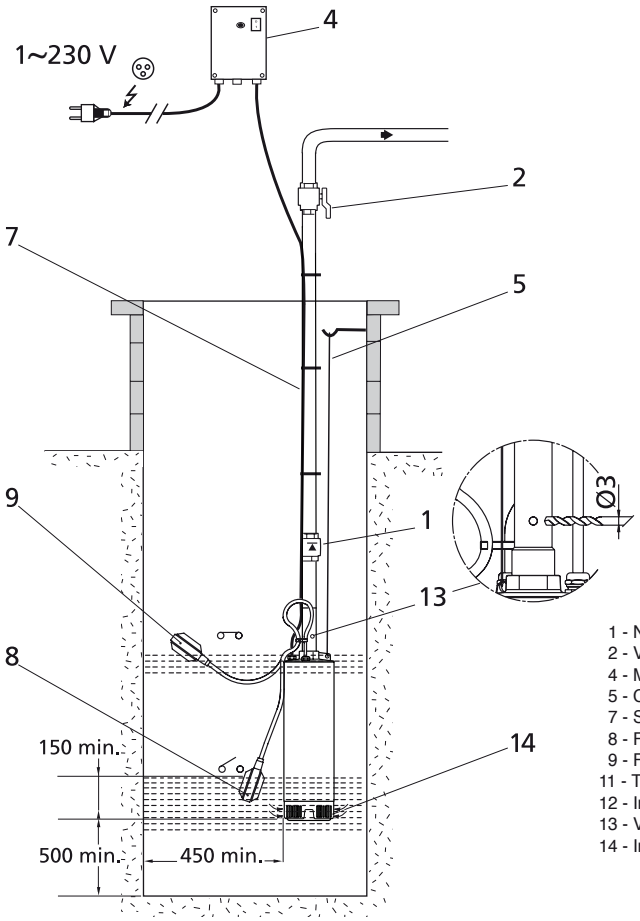

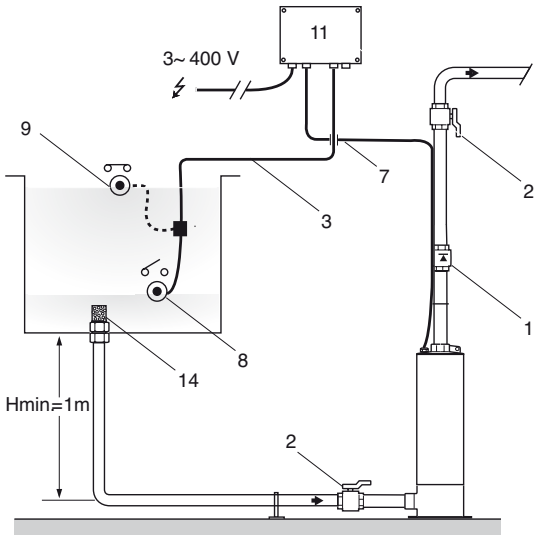

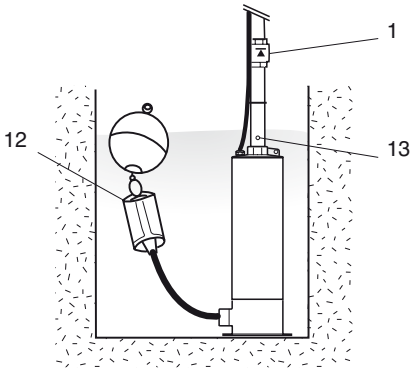

1 - Non-return valve
2 - Valve
4 - Monophase connection box
5 - Carrying cord
7 - Supply cable
8 - Float switch in low position
9 - Float switch in high position
11 - Three-phase connection box
12 - Intake filter with float switch
13 - Ventilation hole (to be made)
14 - Intake suction mesh

AQUASON

ELECTRICAL FEATURES AND DIMENSIONS

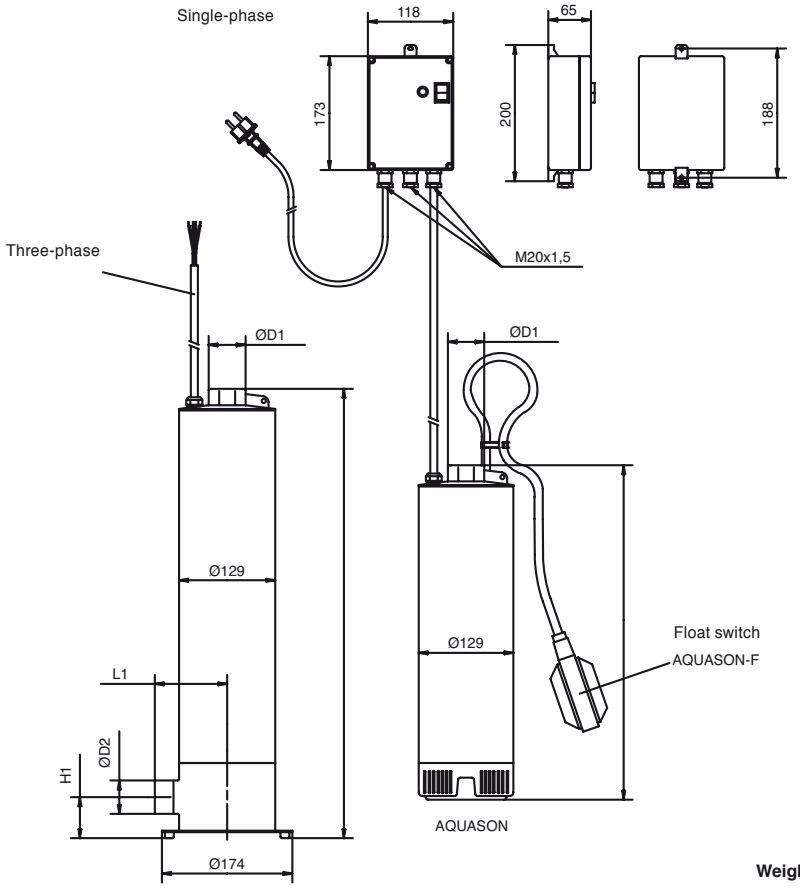

TYPE	P2 Kw	P1 Kw	Supply V	Current A	Capacitor µF/V	D1	D2	H mm	H1 mm	L1 mm	Weight (Without Packaging) Kg	Number of stages
AQUASON-304-M (-F)	0.55	0.85	1x230	4.5	20/450	1"1/4		480			16.5	4
AQUASON-305-M (-F)	0.75	1	1x230	4.9	20/450	1"1/4		504			17	5
AQUASON-306-M (-F)	0.75	1.2	1x230	5.6	20/450	1"1/4		528			17.5	6
AQUASON-307-M (-F)	1.1	1.46	1x230	6.9	30/450	1"1/4		552			19.5	7
AQUASON-308-M (-F)	1.1	1.6	1x230	7.4	30/450	1"1/4		576			21	8
AQUASON-504-M (-F)	0.75	1.15	1x230	5.2	20/450	1"1/4		480			15.5	4
AQUASON-505-M (-F)	0.9	1.4	1x230	6.5	30/450	1"1/4		504			18.5	5
AQUASON-506-M (-F)	1.1	1.7	1x230	7.9	30/450	1"1/4		528			19	6
AQUASON-903-M	1.1	1.55	1x230	7.2	30/450	1"1/4		504			19	3
AQUASON-904-M	1.5	2.1	1x230	10.1	35/450	1"1/4		584			21.5	4
AQUASON-306-T4	0.75	1.2	3x400	2.3		1"1/4		528			17.5	6
AQUASON-308-T4	1.1	1.45	3x400	2.7		1"1/4		576			18.5	8
AQUASON-903-T4	1.1	1.4	3x400	2.5		1"1/4		504			17	3
AQUASON-904-T4	1.5	1.75	3x400	3.2		1"1/4		584			19.5	4
AQUASON-304-M-AL (-F)	0.55	0.85	1x230	4.5	20/450	1"1/4	1"1/4	539	55	93,5	17	4
AQUASON-305-M-AL (-F)	0.75	1	1x230	4.9	20/450	1"1/4	1"1/4	563	55	93,5	17.5	5
AQUASON-306-M-AL (-F)	0.75	1.2	1x230	5.6	20/450	1"1/4	1"1/4	587	55	93,5	18	6
AQUASON-307-M-AL (-F)	1.1	1.46	1x230	6.9	30/450	1"1/4	1"1/4	611	55	93,5	20	7
AQUASON-308-M-AL (-F)	1.1	1.6	1x230	7.4	30/450	1"1/4	1"1/4	635	55	93,5	21.5	8
AQUASON-504-M-AL (-F)	0.75	1.15	1x230	5.2	20/450	1"1/4	1"1/4	539	55	93,5	16	4
AQUASON-505-M-AL (-F)	0.9	1.4	1x230	6.5	30/450	1"1/4	1"1/4	563	55	93,5	19	5
AQUASON-506-M-AL (-F)	1.1	1.7	1x230	7.9	30/450	1"1/4	1"1/4	587	55	93,5	19.5	6
AQUASON-903-M-AL	1.1	1.55	1x230	7.2	30/450	1"1/4	1"1/4	563	55	93,5	19.5	3
AQUASON-904-M-AL	1.5	2.1	1x230	10.1	35/450	1"1/4	1"1/4	643	55	93,5	22	4
AQUASON-306-T4-AL	0.75	1.2	3x400	2.3		1"1/4	1"1/4	587	55	93,5	18	6
AQUASON-308-T4-AL	1.1	1.45	3x400	2.7		1"1/4	1"1/4	635	55	93,5	19	8
AQUASON-903-T4-AL	1.1	1.4	3x400	2.5		1"1/4	1"1/4	563	55	93,5	17.5	3
AQUASON-904-T4-AL	1.5	1.75	3x400	3.2		1"1/4	1"1/4	643	55	93,5	20	4

FEATURES

a) Electrical

- Types M: mono 230 V - 50Hz with start-up, capacitor and thermal protection box.
- Types T4: tri 400 V - 50Hz. Motor protected by essential slave switch.
- Types F: with float switch and protection against running dry built in.

b) Mounting

- In vertical position.

Connection to the installation:

- by 1¼ inch diameter rigid or flexible pipework.
- The pump is lowered into the sump on a nylon cord tied to a support ring on the pump.

c) Maintenance

The hydraulic part and the motor are repaired or the appliance is replaced as standard.

EQUIPMENT

Delivered wrapped inside cardboard crate with:

- 20 m of cable connected to the pump
- Suspension cord (20m, Ø5mm)

Version 1~230V :

- Start-up and protection box

(IP55), capacitor, connection for float switch and standard plug. (Connection between pump and box made in the factory).

Version AL :

- 4 anti-vibration buffers with screws.

PAP

The PAP offer includes:

- An Aquason AL pump.
- An Acson automatic system.
- A floating filter F.
- Two connections.
- A 1.5 m flexible pipe.
- All the electrical elements are pre-wired.

ACCESSORIES

- ACSON.
- Non-return valve.
- Slave switch to protect three-phase motor.
- Bladder tank.
- ALARMSON overflow alarm.
- **Floating filter:**

- Filter F: Floating filter with 0.23mm fine mesh
- Filter FR: Floating filter with 0.23mm fine mesh and built-in non-return valve.
- Filter G: Floating filter with 1mm coarse mesh
- Filter GR: Floating filter with 1mm coarse mesh and built-in non-return valve.

OPERATING RANGES

Flow rates of up to:	**2,6 m³/h**
Manometric heads of up to:	**125 m**
Max. water temperature:	**+ 40°C**
Max. sand content:	**40g/m³**
DN (nominal diameter) delivery port:	**G1”**
Max. submergence depth:	**60 m**
Reference MEI*:	**≥ 0,10**

*Minimum Efficiency Index

IMMERSON D3

SUBMERGED PUMPS - 3” BOREHOLES

D Serie
2 pole - 50 Hz
304 Stainless steel range

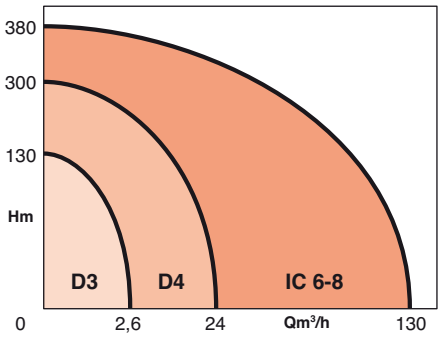

APPLICATIONS

- Abstraction of water from 3” boreholes (DN80), tanks, wells, vessels…
- Water supply and distribution
- Watering and small-scale irrigation
- Water jet supply
- Pressure boosting

BENEFITS

- **Small diameter**
- **Easy to install**
- **Rewindable motor**
- **Single and three-phase supply**
- **Corrosion-proof components**
- **Vertical and horizontal installation**



- IMMERSON D3 (stainless steel)



IMMERSON D3

DESIGN

• Hydraulic part

- Centrifugal, multi-stage with radial impellers.
- 304 stainless steel external jacket, built-in non-return valve.
- Discharge and suction housing with stainless steel suction mesh for the D3.

• Motor

- Existing 3-inch single-phase (MP) and three-phase (T4) motors. Oil-bath motor withstands higher temperatures (40°C).

Speed:	2800 rpm
Winding:	1 ~ 230V
	3 ~ 400V
Frequency:	50Hz
Insulation class:	155 (F)
Protection class:	IP 68
Speed of coolant flow. :	8 cm/s mini
Starts/hour:	20 max.

BASIC CONSTRUCTION

Main parts	Material
Impellers	noryl
Diffusers	polyacetal
Bearing bushings	PUR polyurethane
Bearing bushing supports	noryl
Pump and motor shaft	Stainless steel

IDENTIFICATION

D3 - 01 - 23 - MP/T4 PAP / AC H18

- Submerged pump code for 3" borehole
- Flow rate in m3/h at max. efficiency
- Number of stages
- MP: 230 V single-phase with permanent capacitor
  T4 : 400 V three-phase
- Ready-to-install
- Acson or 18 L tank

CROSS-SECTIONAL DIAGRAM

1 Plug
2 Valve
3 O-ring
4 Discharge housing
5 Valve seat
6 Bearing bushing support
7 Bearing bushing
8 Screw
9 Grower washer
10 Pressure washer
11 Ring
12 Spacer
13 Diffuser disk
14 Diffuser
15 Washer
16 Impeller
17 Diffuser disk
18 Jacket
19 Screw
20 Cable guard
21 Suction housing
22 Screw
23 Suction mesh
24 Shaft
25 Spacer
26 Gasket
27 Washer
28 Screw
29 Diffuser disk
30 Shims
31 Spacer
32 Ring
33 Bearing bushing
34 Bearing bushing support
35 Spacer
36 Diffuser disk
37 Diffuser

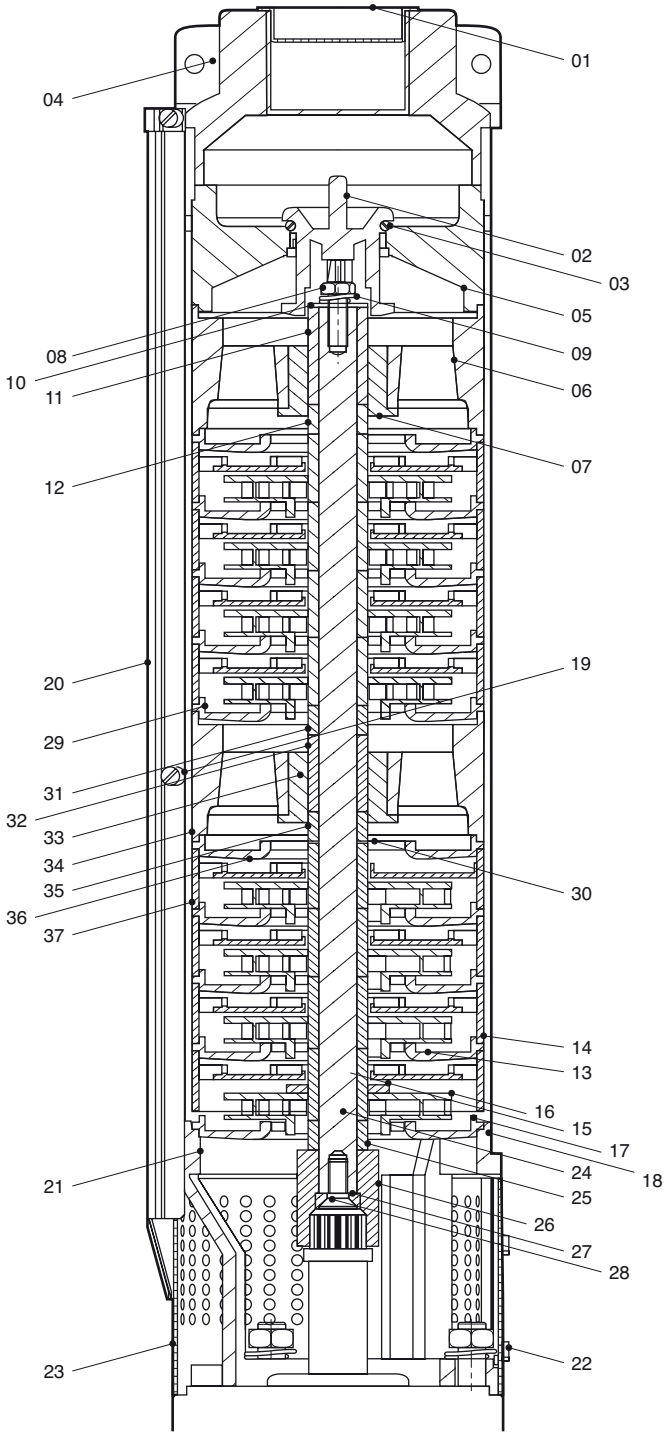

IMMERSON D3

HYDRAULIC SPECIFICATIONS

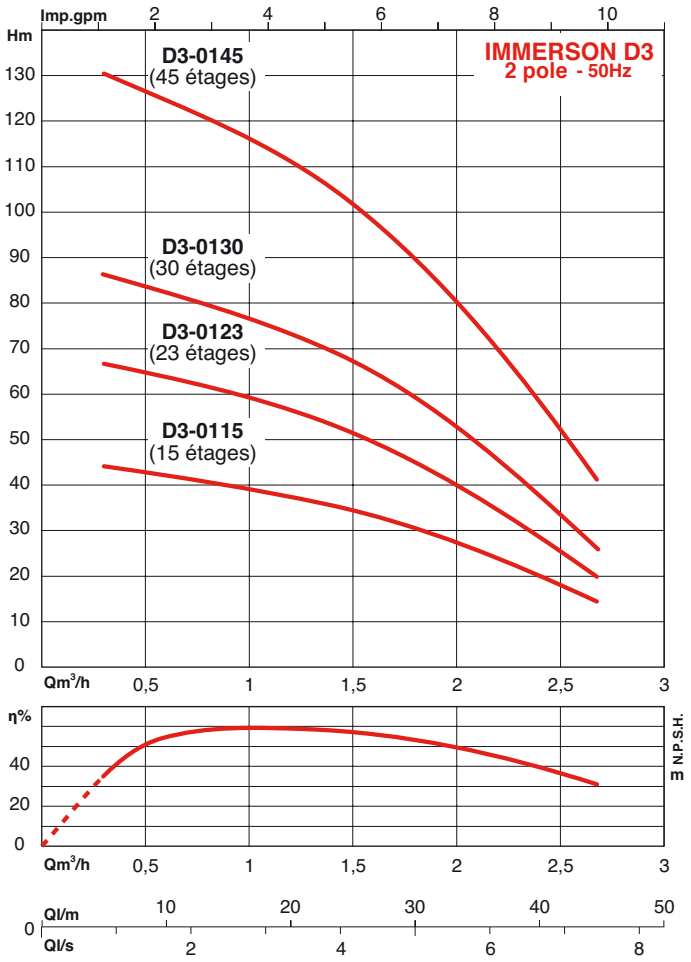

INSTALLATION DIAGRAM

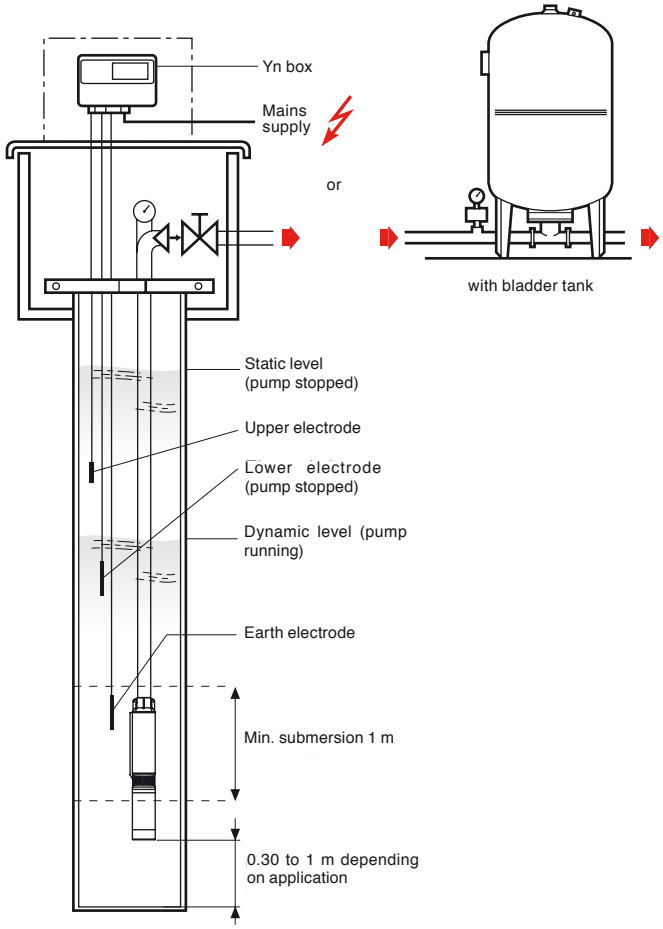

DIMENSIONAL SPECIFICATIONS

Order reference	Power P2	Rated current IN		Cable length		Cross-section of direct start cable	H1	H2		H		Weight minus packaging pump with motor	
		1~230 V, 50 Hz	3~400 V, 50 Hz	1~230 V, 50 Hz	3~400 V, 50 Hz		1~230 V, 50 Hz	3~400 V, 50 Hz	1~230 V, 50 Hz	3~400 V, 50 Hz	1~230 V, 50 Hz	1~230 V, 50 Hz	3~400 V, 50 Hz
	kW	A	A	m	m	mm²	mm	mm	mm	mm	mm	kg	kg
D3 115	0.37	3.75	2.0	1.8	1.8	4 x 1.5	580	377	377	957	957	9.3	9.3
D3 123	0.55	4.50	2.1	1.8	1.8	4 x 1.5	780	397	377	1177	1157	10.8	10.5
D3 130	0.75	5.85	2.5	1.8	1.8	4 x 1.5	1000	416	397	1416	1397	12.4	12.0
D3 145	1.10	–	3.2	–	1.8	4 x 1.5	1380	–	416	–	1796	–	14.4

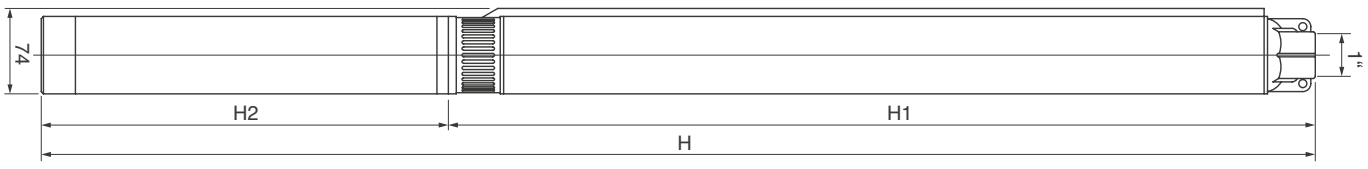

IMMERSON D3

RECOMMENDED ACCESSORIES

YN7112 control boxes

- Voltage can be switched between 230 V and 400 V just by moving a fuse.
- Motor overload protection by thermal relay.
- 240 - 400 V /12 V, 50/60 Hz transformer
- Pump controlled by two floats (to prevent flutter on restarting when the water-level float is activated).

Low-water box (BME), with:

- 2 indicator lights on the front: Red = low water, green = power on.
- Automatic reset configurable from 30 seconds to 2 minutes .
- Operates with a level-sensing electrode and a 30 m cable, connected to the box by a pin connector.
- Connects to mains power supply via a standard 2 pole + earth wall socket.

Motor cable

Permissible cable lengths

Type of electric courant	Motor	Cable cross-section in mm2 (cable with 4 conductors)			
	P2 kW	1,5	2,5	4	6
230 V single-phase Direct start	0,37	78	125	—	—
	0,55	57	95	152	—
	0,75	45	75	120	174
400 V Three-phase Direct Start	0,37	—	—	—	—
	0,55	246	—	—	—
	0,75	200	333	—	—
	1,1	146	244	390	—
Cable weight per m/kg	0,2	0,25	0,3	0,4	0,65

Heat-shrinkable junctions

Order reference	For cable cross-sections
Jonctiontherm 0	4 X 1,5 mm² Et 4 X 2,5 mm²
Jonctiontherm 1	4 X 4,0 mm² À 4 X 6 mm²

CHARACTERISTICS OF COOLING SKIRTS

If the borehole diameter is too big in relation to the pump diameter, or for installation in a tank, the fluid speed will not be sufficient to cool the motor.
A cooling skirt will then be necessary.
To check whether a skirt should be installed, refer to the technical data sheet: **cooling skirts.** Skirt made of 100% AISI 304 stainless steel

For vertical installation:

- 1 motor cooling jacket
- 1 spacer for centring the motor in the skirt
- 3 clamping collars for securing skirts and spacers
- 1 skirt end gasket to be positioned between the skirt and the hydraulics

We offer vertical installation kits which are different from horizontal installation kits.

Important

For horizontal installation, the skirt and fixing kit must be ordered separately.

For horizontal installations:

- 1 motor cooling jacket
- 1 spacer for centring the motor in the skirt
- 3 clamping collars for securing skirts and spacers
- 1 skirt end gasket to be positioned between the skirt and the hydraulics
- 1 kit with 2 mounts (motor and hydraulics) for stabilising the pump in the horizontal position

Composition of the kit:	H	Ø	G
	mm	mm	mm
Stainless steel skirt	500	100	
Spacer for centring the skirt around the motor	75	92,5	
gasket	20	93	
3 clamping collars			
1x large mount (skirt)	112	93	150
1x small mount (hydraulics)	112	71,5	139

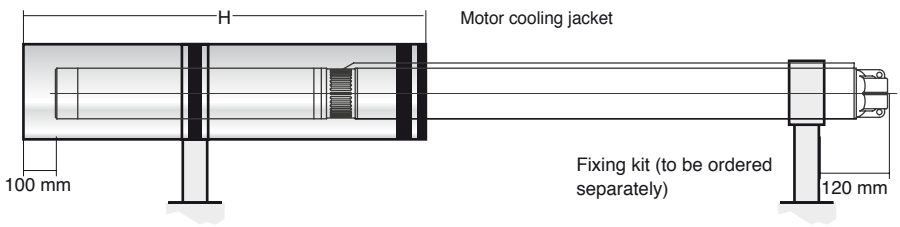

SPECIFICITIES

a) Electrical

MP (single phase) and T4 (three-phase) in 50Hz as standard.

b) Installation

Vertically or horizontally (cooling skirt strongly recommended for horizontal).

NOTA

Single-phase motors are designed to operate with a permanent capacitor (MP) integrated into a box with thermal protection (specify the type of motor when ordering).
In both SINGLE-PHASE and THREE-PHASE, provide a control and low-water protection box or cabinet with level-sensing electrodes or a float switch.

c) Packaging

Supplied packaged with a 1.8 m long, 4x1.5mm^{2}cable.

d) Maintenance

Standard exchange of the appliance or repair of the hydraulic part and motor.

PAP

"Ready-to-Install"

single-phase (MP) models supplied with:

- D3 single-phase
- Starter box with thermal protection
- 30 m of power cable between pump and box
- 30 m of polypropylene rope for supporting the pump.
- 2 m of power cable with standardised pug
- One 1" PVC male connector
- One 1" PVC female connector
- Depending on the versions: one Acson (AC) or a booster assembly with an 18-litre tank (H18).

ACCESSORIES

- Shut-off valves.
- Non-return valves.
- Bladder (or galvanised) tanks).
- Pressure gauge.
- Single-core cable for level-sensing electrodes.
- Stainless steel cooling skirts, see technical data sheet on **Cooling Skirts.** N.T. N°300-16/F



IMMERSON D4

4" BOREHOLE PUMPS
2 poles - 50 Hz

OPERATING RANGES

Flow rates of up to:	**6 m³/h**
Manometric heads of up to:	**300 m**
Max. water temperature:	**+ 30°C**
Max. sand content :	**50 g/m³**
DN of delivery hole :	**G1¼**
Max. submergence depth:	**200 m**
Référence MEI* :	**≥ 0,10**

*Minimum Efficiency Index

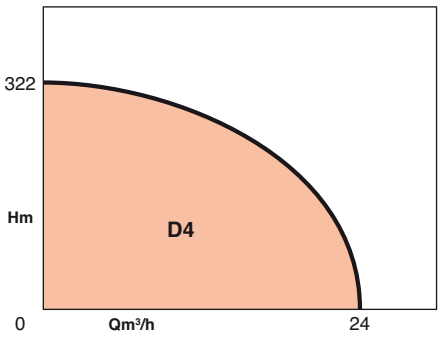

APPLICATIONS

- Abstraction of water from 4" boreholes (DN 100), from lakes, rivers, etc...
- Drinking water supply in urban and rural areas.
- Industrial water supply.
- Drainage and drawdown of groundwater on building sites.
- Fire-fighting (apart from sprinkler systems).
- Boosting water pressure.
- Water jet supply.
- Cooling water circulation, etc…

ADVANTAGES

- **Hydraulics equipped with floating impellers guaranteeing less wear due to sand.**
- **Deep pumping.**
- **Corrosion-proof components (304 stainless steel casing), noryl impellers and diffusers).**
- **Can be installed vertically or horizontally.**
- **Operating safety: completely sealed and electrically insulated motor.**
- **Sealed motor in an oil and antifreeze bath, ensuring the cooling and lubrication of the bearings.**

• IMMERSON D4



• **IMMERSON D4 PAP**
Ready for pumping



• IMMERSON D4 QC



IMMERSON D4

DESIGN

• Hydraulic part

- Centrifugal, multi-stage with radial impellers.
- Elastomer/chromium upper and lower shaft bearings ensuring exceptional sand resistance.
- Optimised cells (impellers and diffusers with wearing rings) optimised for improved hydraulic efficiency.
- Floating hydraulics.
- Stainless steel discharge housing, suction mesh and jacket between stages.
- Built-in non-return valve.
- Suction mesh built into the housing facilitates alignment of pump and motor.

• Motor

- NEMA connection.
- Factory-filled and sealed in a water and anti-freeze bath for the service life of the motor.
- Stator is vacuum-impregnated and embedded in resin, ensuring excellent heat dissipation.
- Sealed with a lip seal and sand guard.

Speed :	2900 rpm
Winding :	1~230V
	3~ 400 V
Frequency :	50 Hz
Insulation class :	130 B
Protection class:	IP 68
Coolant flow speed:	0,08m/s mini
Starts per hour:	20 max.

BASIC CONSTRUCTION

Main parts	Material
Discharge housing	304 stainless steel (1.4301)
Impellers	Noryl
External jacket-Strainer	Inox 304 (1.4301)
Diffusers	Noryl
with wearing ring	304 stainless steel (1.4301)
Pump shaft bearings	Elastomer
Sleeve under shaft bearing	Chromed stainless steel
Pump shaft	430 stainless steel (1.4104)
Motor shaft	303 stainless steel (1.4305)

IDENTIFICATION

D4-04-09-MP-PAP-QC-C

- Submersible pump code for 4" bore-hole
- Flow in m^3/h with optimum output
- Number of stages
- MP : 230V single-phase motor with permanent capacitor start-up
  T4 : 400V three-phase motor
- PAP version (details on page 6)
- Quick Connect version(details on page 6)
- Generation C

INSTALLATION DIAGRAM

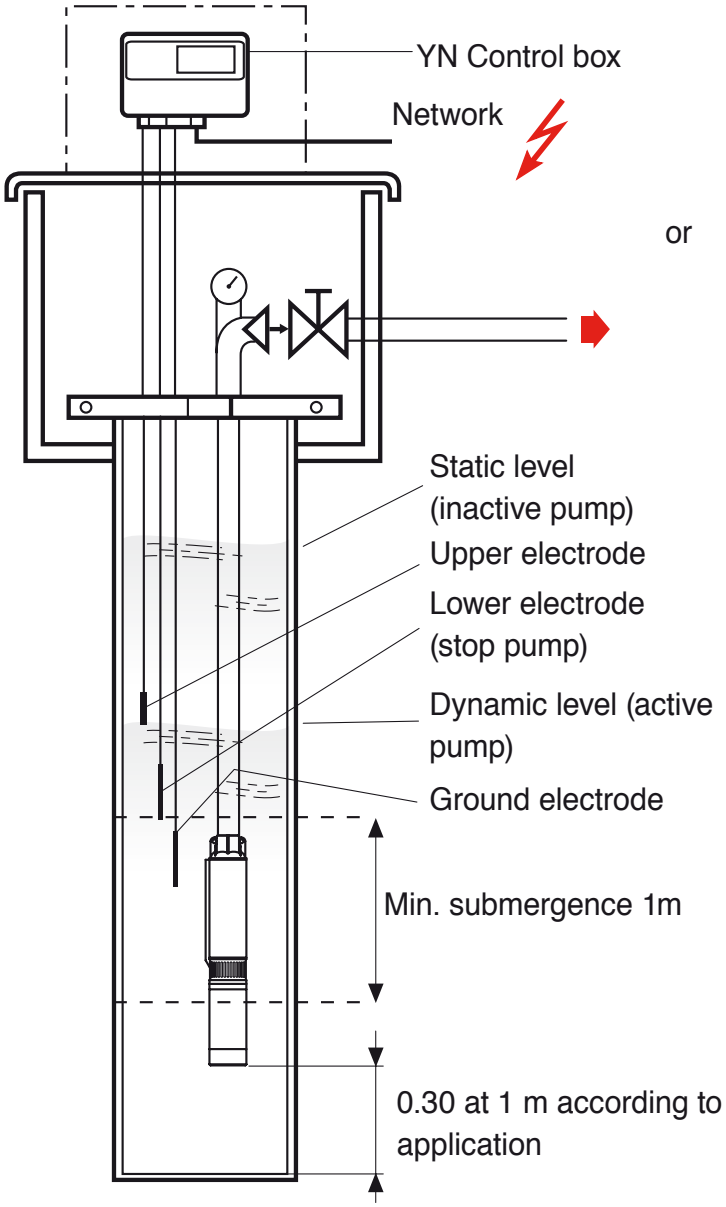

or

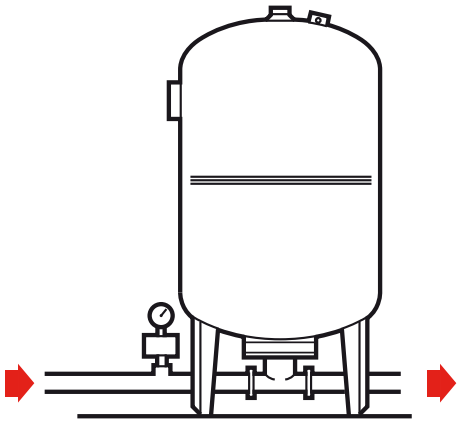

with bladder tank

IMMERSON D4

HYDRAULIC PRESELECTION RANGES

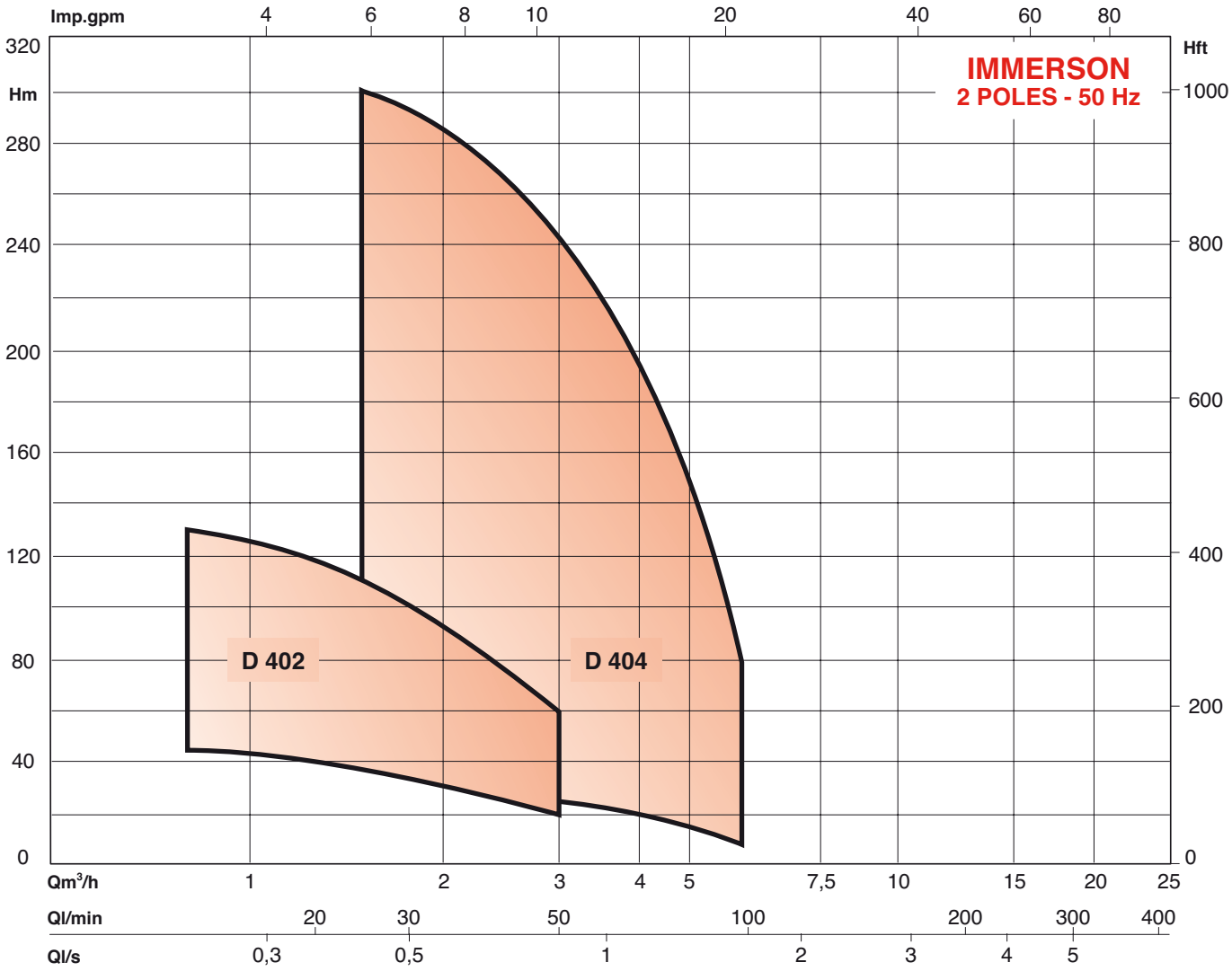

HYDRAULIC, ELECTRICAL AND DIMENSIONAL SPECIFICATIONS

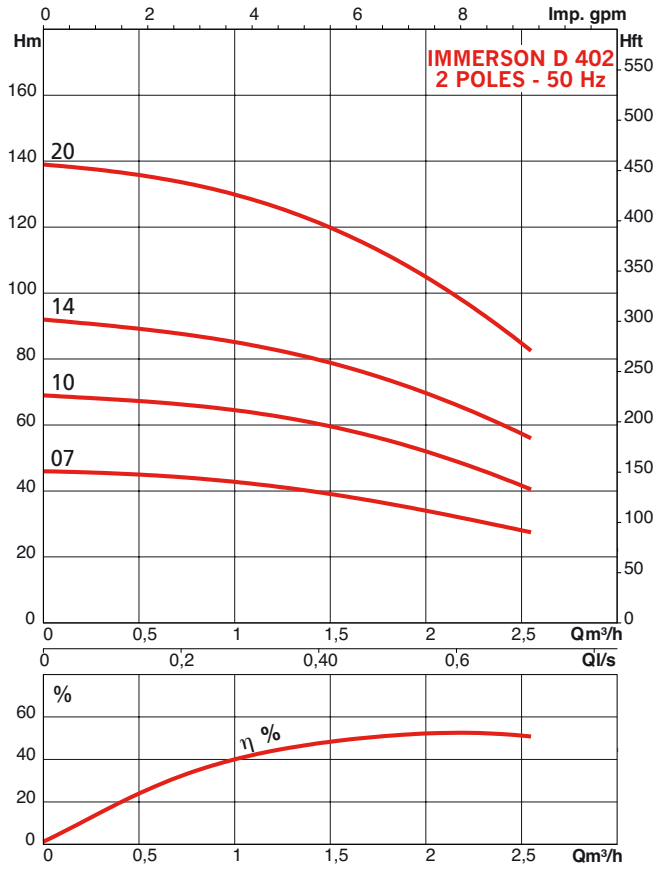

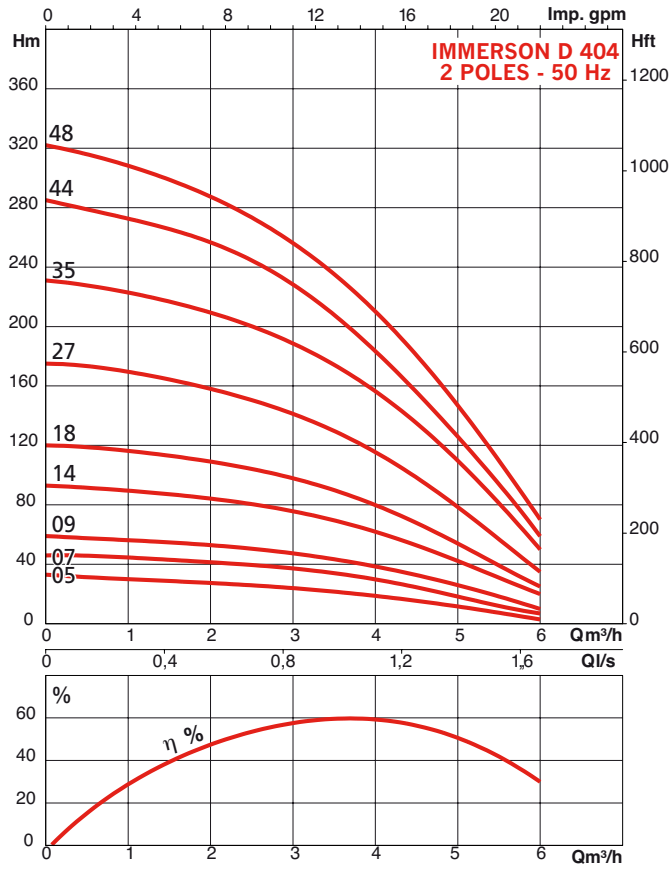

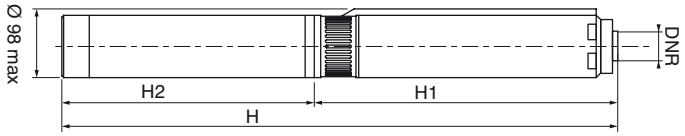

IMMERSON REFERENCE	MOTOR Electric Supply	P2 kW	I(A)	DNR	PUMP Stage number	H mm	H1 mm	H2 mm	Weight kg
D4-0207-MP-C	1~230V	0,37	3,4	G1" 1/4	7	521	271	250	9,6
D4-0207-MP-PAP-C	1~230V	0,37	4,4	G1" 1/4	7	566	301	265	11,1
D4-0207-MP-QC-C	1~230V	0,37	3,4	G1" 1/4	7	521	271	250	9,6
D4-0207-T4-C	3~400V	0,37	1,2	G1" 1/4	7	506	271	235	8,6
D4-0207-T4-QC-C	3~400V	0,37	1,2	G1" 1/4	7	506	271	235	8,6
D4-0209-MP-PAP-C	1~230V	0,75	5,9	G1" 1/4	9	639	344	295	13,9
D4-0210-MP-C	1~230V	0,55	4,4	G1" 1/4	10	589	324	265	11,4
D4-0210-MP-QC-C	1~230V	0,55	4,4	G1" 1/4	10	589	324	265	11,4
D4-0210-T4-C	3~400V	0,55	1,7	G1" 1/4	10	574	324	250	10,3
D4-0210-T4-QC-C	3~400V	0,55	1,7	G1" 1/4	10	574	324	250	10,3
D4-0214-MP-C	1~230V	0,75	5,9	G1" 1/4	14	689	394	295	12,2
D4-0214-MP-QC-C	1~230V	0,75	5,9	G1" 1/4	14	689	394	295	12,2
D4-0214-T4-C	3~400V	0,75	2,2	G1" 1/4	14	659	394	265	12,2
D4-0214-T4-QC-C	3~400V	0,75	2,2	G1" 1/4	14	659	394	265	12,2
D4-0220-MP-C	1~230V	1,1	7,8	G1" 1/4	20	839	499	340	16,1
D4-0220-MP-C-QC	1~230V	1,1	7,8	G1" 1/4	20	839	499	340	16,1
D4-0220-T4-C	3~400V	1,1	3	G1" 1/4	20	794	499	295	15,8
D4-0220-T4-C-QC	3~400V	1,1	3	G1" 1/4	20	794	499	295	15,8

IMMERSON REFERENCE	MOTOR Electric Supply	P2 kW	I(A)	DNR	PUMP Stage number	H mm	H1 mm	H2 mm	Weight kg
D4-0405 MP-C-QC	1~230V	0,37	3,4	G1" 1/4	5	507	257	250	9,5
D4-0405 T4-C	3~400V	0,37	1,2	G1" 1/4	5	492	257	235	8,5
D4-0405-MP-C	1~230V	0,37	3,4	G1" 1/4	5	507	257	250	9,5
D4-0405-MP-PAP-C	1~230V	0,37	3,4	G1" 1/4	5	507	257	250	9,5
D4-0405-T4-C-QC	3~400V	0,37	1,2	G1" 1/4	5	492	257	235	8,5
D4-0407 MP-C-QC	1~230V	0,55	4,4	G1" 1/4	7	566	301	265	11,1
D4-0407 T4-C	3~400V	0,55	1,7	G1" 1/4	7	551	301	250	10
D4-0407-MP-C	1~230V	0,55	4,4	G1" 1/4	7	566	301	265	11,1
D4-0407-MP-PAP-C	1~230V	0,55	4,4	G1" 1/4	7	566	301	265	11,1
D4-0407-T4-C-QC	3~400V	0,55	1,7	G1" 1/4	7	551	301	250	10
D4-0409 MP-C-QC	1~230V	0,75	5,9	G1" 1/4	9	639	344	295	13,9
D4-0409 T4-C	3~400V	0,75	2,2	G1" 1/4	9	609	344	265	11,6
D4-0409-MP-C	1~230V	0,75	5,9	G1" 1/4	9	639	344	295	13,9
D4-0409-MP-PAP-C	1~230V	0,75	5,9	G1" 1/4	9	639	344	295	13,9
D4-0409-T4-C-QC	3~400V	0,75	2,2	G1" 1/4	9	609	344	265	11,6
D4-0414 MP-C-QC	1~230V	1,1	7,8	G1" 1/4	14	792	452	340	15,3
D4-0414 T4-C	3~400V	1,1	3	G1" 1/4	14	747	452	295	15
D4-0414-MP-C	1~230V	1,1	7,8	G1" 1/4	14	792	452	340	15,3
D4-0414-MP-PAP-C	1~230V	1,1	7,8	G1" 1/4	14	792	452	340	15,3
D4-0414-T4-C-QC	3~400V	1,1	3	G1" 1/4	14	747	452	295	15
D4-0418 T4-C	3~400V	1,5	4	G1" 1/4	18	878	538	340	16,1
D4-0418-MP-C	1~230V	1,5	10,2	G1" 1/4	18	913	538	375	18,7
D4-0418-T4-C-QC	3~400V	1,5	4	G1" 1/4	18	878	538	340	16,1
D4-0427 T4-C	3~400V	2,2	5,6	G1" 1/4	27	1142	767	375	20,4
D4-0427-MP-C	1~230V	2,2	15	G1" 1/4	27	1197	767	430	22,6
D4-0427-T4-C-QC	3~400V	2,2	5,6	G1" 1/4	27	1142	767	375	20,4
D4-0435 T4-C	3~400V	3	7,5	G1" 1/4	35	1414	934	480	26,2
D4-0435-T4-C-QC	3~400V	3	7,5	G1" 1/4	35	1414	934	480	26,2
D4-0444 T4-C									
D4-0448 T4-C									

IMMERSON D4

IMMERSON D4 QUICK CONNECT VERSION

- Quick and easy installation due to a simple connection.
- Easy connection to pump cable.

The Immerson D4 QC contains:

- Immerson D4 pump.
- Quick Connect connection cable, length 1.5m, equipped with a QC female connector on the motor side and a QC male connector on the power supply side to be connected to one of the following Quick Connect cable kits listed below.

The Quick Connect cable kit can be ordered separately depending on the length you need:

Type	Length	Item ref.
4x1,5mm	10	4087121
4x1,5mm	20	4440091
4x1,5mm	30	4087122
4x1,5mm	50	4087129
4x1,5mm	80	4087130
4x1,5mm	100	4087131
4x2,5mm	50	4087132
4x2,5mm	80	4087136
4x2,5mm	100	4087137

- IMMERSON D4 Quick Connect



- Quick Connect cable kit – QC connector pump side, open-wire conductors on box side



IMMERSON D4 PAP VERSION

- Complete all-in-one range providing all the necessary standard fixing components.
- Simple to order and grouped delivery including accessories.

The “Ready-to- Pump” Immerson D4 contains:

- Immerson D4 pump (only single-phase models) with 40m of ACS round cable, cable tie.
- MP box with permanent capacitor.
- 41 m stainless steel lifeline 316L.
- 8 clamp collars to attach the electric cable to the upward piping.



COOLING JACKET

If the borehole diameter is much bigger than the pump diameter , if it is used in a civil engineering process or in horizontal position, the fluid will not be able to cool the motor (minimum cooling speed: 0.08 m/s) a cooling jacket will be then required.
To verify if a cooling jacket is required or not,refer to our cooling jacket technical instructions.



Cooling jacket made entirely from AISI 316 stainless steel, standard diameter 125mm.

Accessories included in the cooling jacket kit:

- 1 cross bar to centre the motor in the cooling jacket
- 3 clamp collars
- 1 cooling jacket end joint to be fixed between the jacket and the hydraulics
- 1 support kit with 2 to 4 attachments depending on the model (motor and hydraulics) only with for horizontal installation.

• Vertical installation

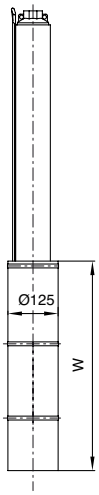

W = 750mm on models D4-0435 to D4-0449,
D4-0817 to D4-0832 and D4-1611 to D4-1620

W = 500mm on all other models

Model	Cooling jacket item reference vertical installation	Cooling jacket item reference horizontal installation
D4-0207-C	4064430	6037935
D4-0209-C		
D4-0210-C		
D4-0214-C		
D4-0220-C		
D4-0405-C		
D4-0407-C		
D4-0409-C		
D4-0414-C		
D4-0418-C		
D4-0427-C		
D4-0435-C	4064431	6038901
D4-0444-C		
D4-0448-C		

NB: for the PAP version or QC model, the cooling jacket item references remain unchanged.

• Horizontal installation

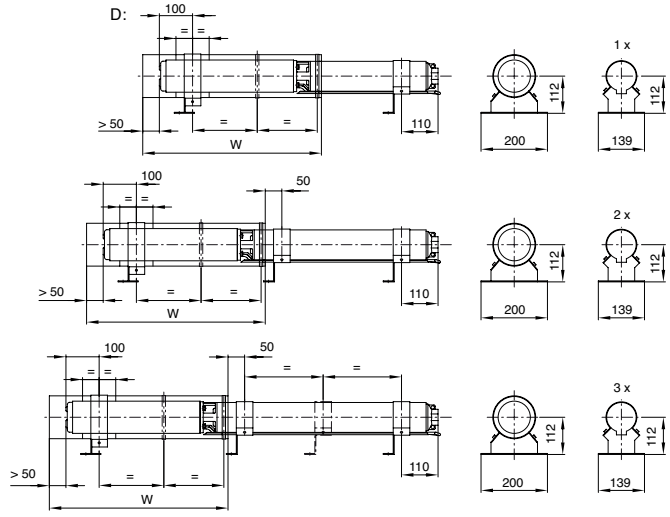

NB: In case of horizontal installation,a cooling jacket is definitely required.

IMMERSON D4

ELECTRICAL ACCESSORIES

CONTROL DEVICES Yn7000

- Selection of 230 V or 400 voltage by simply moving a protective fuse.
- Motor over-current protection by thermal relay.
- 240 - 400 V/12V, 50/60 Hz transformer.
- Pump control by 2 float switches.





DRY RUNNING PROTECTION KIT :

- 2 luminous indicators on the front :
  Dry running : red color
  Switched on : green color.
- For submersible single-phase pumps.
- Includes a box and its electrode level with 30m cable.
- Max. 230V - 50/60 Hz - 1,5kW.

ELECTRICAL CABLES AND GASKETS

4" motor cable kit

4 x 1.5 mm2 flat motor supply cable with standard connector on motor side and clamp collars.

Item ref.	Cable length
6024965	5 m
6024966	10 m
6035351	20 m
6036946	30 m
6036947	40 m
6036948	50 m

ACS motor round cable

Sold by the metre

Item ref.	mm² Section
6045510	4x1,5
6045511	4x2,5
18158	4x4,0
18159	4x6,0
18160	4x10,0

Admissible cable lengths

Type of current	motor	cable section in mm²					
	P2 kW	1,5	2,5	4	6	10	16
SINGLE-PHASE 230 V direct start-up	0,25	100 m					
	0,37	85 m	144 m	—	—	—	—
	0,55	64 m	107 m	140 m	—	—	—
	0,75	49 m	83 m	110 m	165 m	—	—
	1,10	32 m	54 m	80 m	120 m	195 m	—
	1,50	25 m	35 m	60 m	95 m	153 m	245 m
	2,20	17 m	25 m	45 m	65 m	102 m	163 m
THREE-PHASE 400 V direct start-up	0,37	570 m	—	—	—	—	—
	0,55	380 m	610 m	—	—	—	—
	0,75	282 m	470 m	740 m	—	—	—
	1,10	204 m	340 m	540 m	—	—	—
	1,50	156 m	260 m	420 m	530 m	—	—
	2,20	102 m	170 m	290 m	400 m	600 m	—
	3,00	79 m	132 m	230 m	320 m	490 m	—
	3,70	70 m	125 m	200 m	290 m	420 m	680 m
	4,00	58 m	97 m	180 m	250 m	380 m	560 m
	5,50	45 m	75 m	140 m	200 m	300 m	500 m
	7,50	30 m	50 m	100 m	145 m	210 m	350 m
Cable weight by the m.		0,2 kg	0,25 kg	0,3 kg	0,4 kg	0,65 kg	0,85 kg

Heat-retractable junctions

Description	mm² section	Item ref.
junction 0	4x1,5 / 4x2,5	4029677
junction 1	4x4 / 4x6	4059212
junction 2	4x10 / 4x16	4029678
junction 3	4x25 / 4x35	4052279

FEATURES

a) Electrical

- **MP** : single-phase motor 230 V - 50 Hz with a permanent start-up capacitor.
- **T4** : three-phase motor 400 V - 50 Hz.

NB: single-phase motors are intended to run with a permanent capacitor (MP) supplied in a box with thermal protection.
A control device should be provided To forecast for single phase and three phase models, a control panel and protection against dry running with the level electrode as well.

b) Assembly

- In a vertical or horizontal position (only with a cooling jacket).
- Connect to the installation with rigid threaded steel piping Ø G1$^{1/4}$. If the pump is connected with flexible piping, it should be supported with a rope attached to 2 lifting rings located on the discharge casing.

c) Packaging

- Supplied packed up,with prime cable of polypropylene 1.75m 4x1.5mm² (2.5m for D1613 to D1620 models) required to bring down the pump into the borehole.

d) Maintenance

- Standard exchange or maintenance and repair of the hydraulic part and the motor as well.

RECOMMENDED ACCESSORIES

- Isolating valve.
- Check valve.
- Bladder tank (or galvanised).
- Manometer.
- Water level electrodes.
- Cooling jacket

OPERATING RANGES

Flow rates of up to:	**78 m³/h**
Manometric heads of up to:	**420 m**
Max. water temperature:	**+ 30°C**
Max. sand content:	**50 g/m³**
DN of delivery port:	**G1¼ to G3**

IMMERSON S4-S6

SUBMERGED BOREHOLE PUMPS
Domestic - Agriculture - Industry
50 Hz

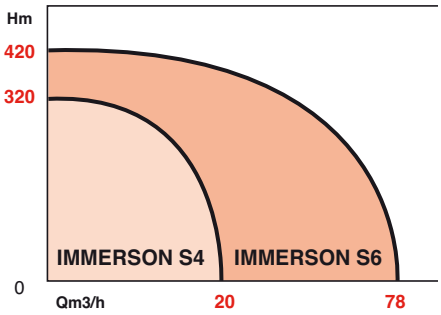

APPLICATIONS

- Abstraction of water from 4" and 6" boreholes (from lakes, rivers, ...)
- Drinking water supply in urban and rural areas.
- Industrial applications.
- Fire-fighting.
- Boosting water pressure.
- Mineral water distribution.

ADVANTAGES

- **Deep pumping.**
- **Corrosion-proof components (all-stainless-steel design).**
- **Vertical and horizontal installation.**
- **Strong construction.**
- **«Ready-to-Pump» solution**
- **Easy product maintenance**
- **Easy to dismantle and assemble.**
- **Non-return valve designed to withstand 40 bar of pressure without losses**

Certified ACS

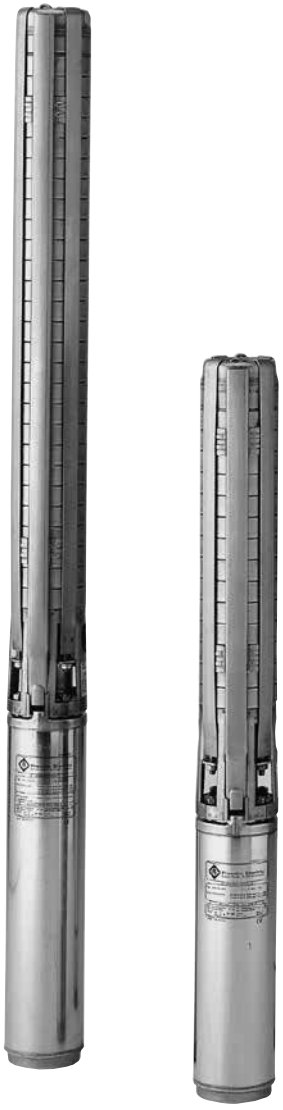

• YN 7000 control box



• Low-water box (BME)



IMMERSON S4-S6

DESIGN

• Hydraulic part

- All-stainless-steel pump design
- Centrifugal, multi-stage pump with radial or semi-axial impellers, depending on the design.
- Optimised stages (impellers, diffusers and gaskets) for greater efficiency
- Pump head with built-in non-return valve

• Motors

- With a permanent capacitor (MP),
- Factory-filled and sealed in a water + anti-freeze bath for the service life of the motor.
- Stator is vacuum-impregnated and embedded in resin, ensuring excellent heat dissipation.
- Sealed with a double lip seal and sand guard.

Speed :	2900 rpm
Winding :	1~ : 230 V
	3~ : 400 V
Frequency :	50 Hz
	(60 Hz option)
Insulation class:	130 (B)
Protection class:	IP 68
Coolant flow speed:	8 cm/s min.
Starts per hour:	20 max.

NU motor (6" IS only)

Rotation speed:	2,820 min^{-1}
Winding	1~ 230V
	3~ 400V
Frequency	50 Hz
	(60 Hz option)
Efficiency:	78,7%
Insulating class :	PVC 80°C
Starts per hour:	15/h

Benefit of NU motor

- «NEMA standard» submerged motor with submerged rotor.
- Rewindable motor.
- 10% power reserve for operating with a variable frequency drive
- Stainless steel and marine bronze motor, shaft and fasteners.
- Strengthened motor end.
- Radial bearings in the form of special lubricated synthetic carbon shaft bearings cooled by the cooling water.
- With counter-thrust plate for negative axial loads.
- Motor filled with drinking water.

Option : with winding temperature control by cold temperature sensors or PT 100.

EXPLODED VIEW

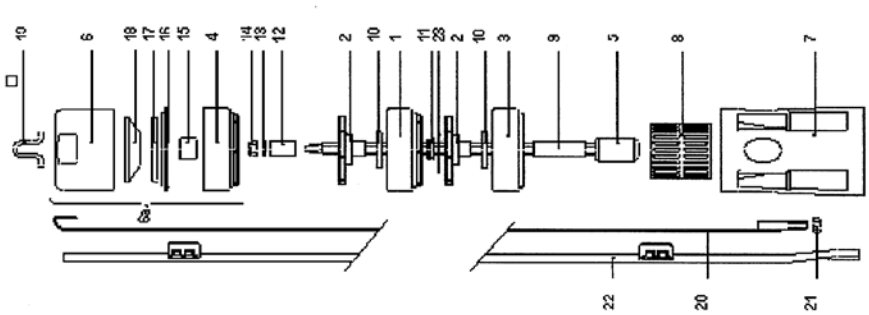

1 - Diffuser
2 - Impeller
3 - Lower diffuser
4 - Upper chamber
5 - Shaft with Nema coupling
6 - Pump head
7 - Base
8 - Suction mesh
9 - Ring
10 - Diffuser gasket
11 - Intermediate bearing gasket
12 - Upper ring
13 - Washer
14 - M8 nut
15 - Anti-friction bearing
16 - Valve support
17 - Valve seat
18 - Non-return valve
19 - Hook
20 - Tie rod
21 - M8 nuts
22 - Cable guard
23 - Wearing ring (only for version 7)

IDENTIFICATION

IS 4 - 02 - 11 - MP / B
SD
T4

Code for submerged 4" stainless steel pump

Flow rate in m^3/h at max. efficiency

Number of stages

MP : 230 V single-phase with permanent capacitor
T4 : 400 V three-phase motor
SD: Star-delta starting (IS6)

Index d'évolution technique

BASIC CONSTRUCTION

Main parts	Material
Pump head	AISI 304 stainless steel
Impellers	AISI 304 stainless steel
External jacket	AISI 304 stainless steel
Diffusers	AISI 304 stainless steel
Suction mesh	AISI 304 stainless steel
Shaft with Nema coupling	AISI 304 stainless steel
Bearing	AISI 304 stainless steel

Option: 316 stainless steel hydraulics and motors

CROSS-SECTIONAL DIAGRAM

• **Radial impellers**

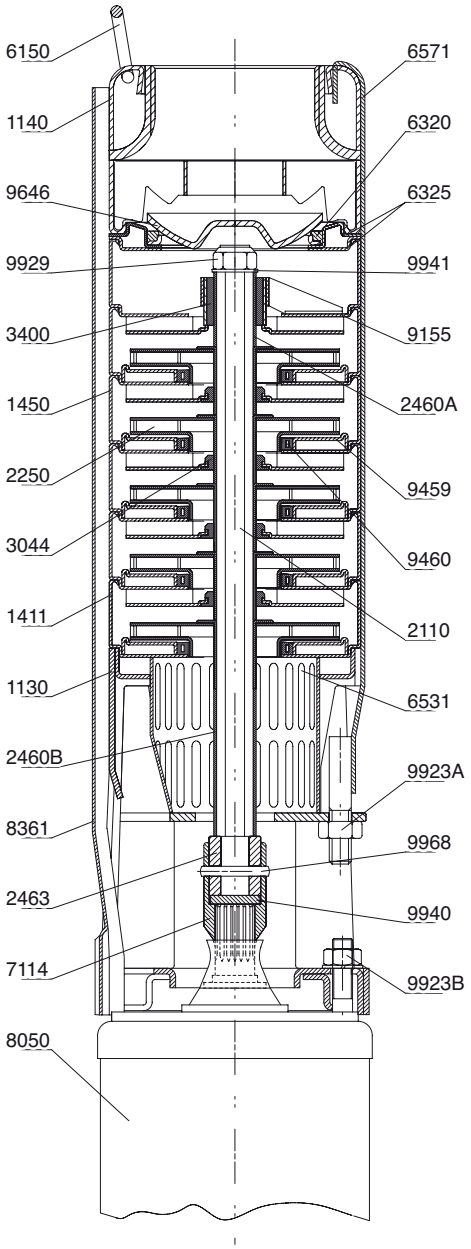

• **Semi-radial impellers**

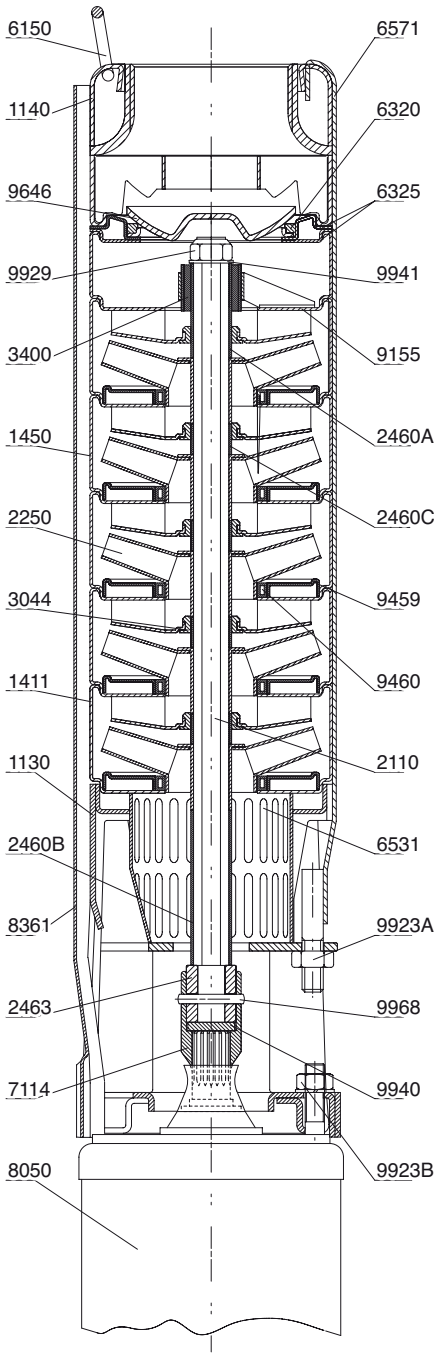

1130 - Suction housing
1140 - Discharge valve housing
1411 - First-stage diffuser
1450 - Diffuser with return channel
2110 - Shaft
2250 - Impeller
2460a - Shaft end-side spacer
2460b - Coupling-side spacer
2460c - Inter-stage spacer
2463 - Coupling spacer shim
3044 - Intermediate bearing
3400 - Jacket under shaft bearing
6150 - Handling ring
6320 - Valve seat
6325 - Valve cap
6531 - Suction mesh
6571 - Assembly tie rod
7114 - Coupling
8050 - Motor
8361 - Motor cable guard
9155 - Ret. c. diffuser Intermediate bearing
9459 - Floating impeller gasket cap
9460 - Special gasket (s/plan and specific)
9646 - Valve
9923a - Hexagonal nut h
9923b - Hexagonal nut h
9929 - Self-locking nut
9940 - Special washer
9941 - Flat washer
9968 - «V»-shaped split pin

IMMERSON S4-S6

HYDRAULIC PRESELECTION RANGES

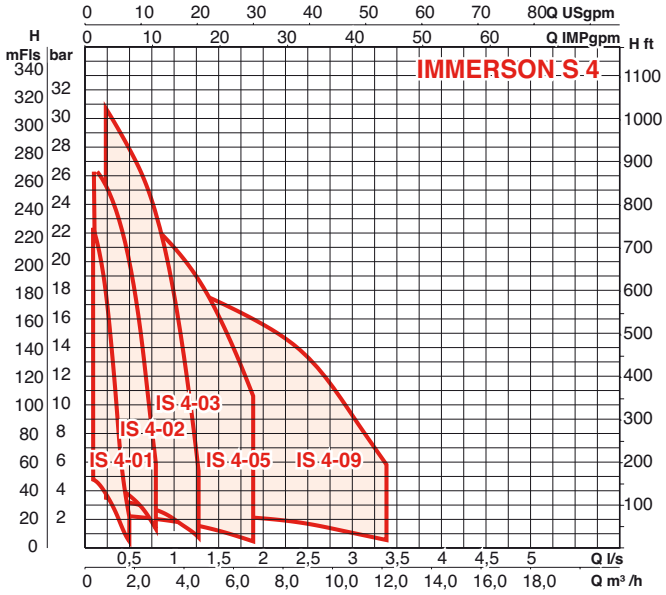

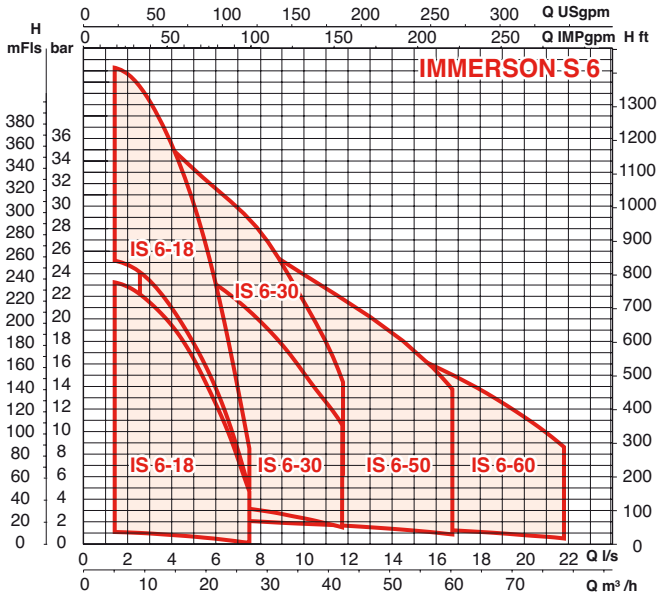

TYPES OF INSTALLATIONS

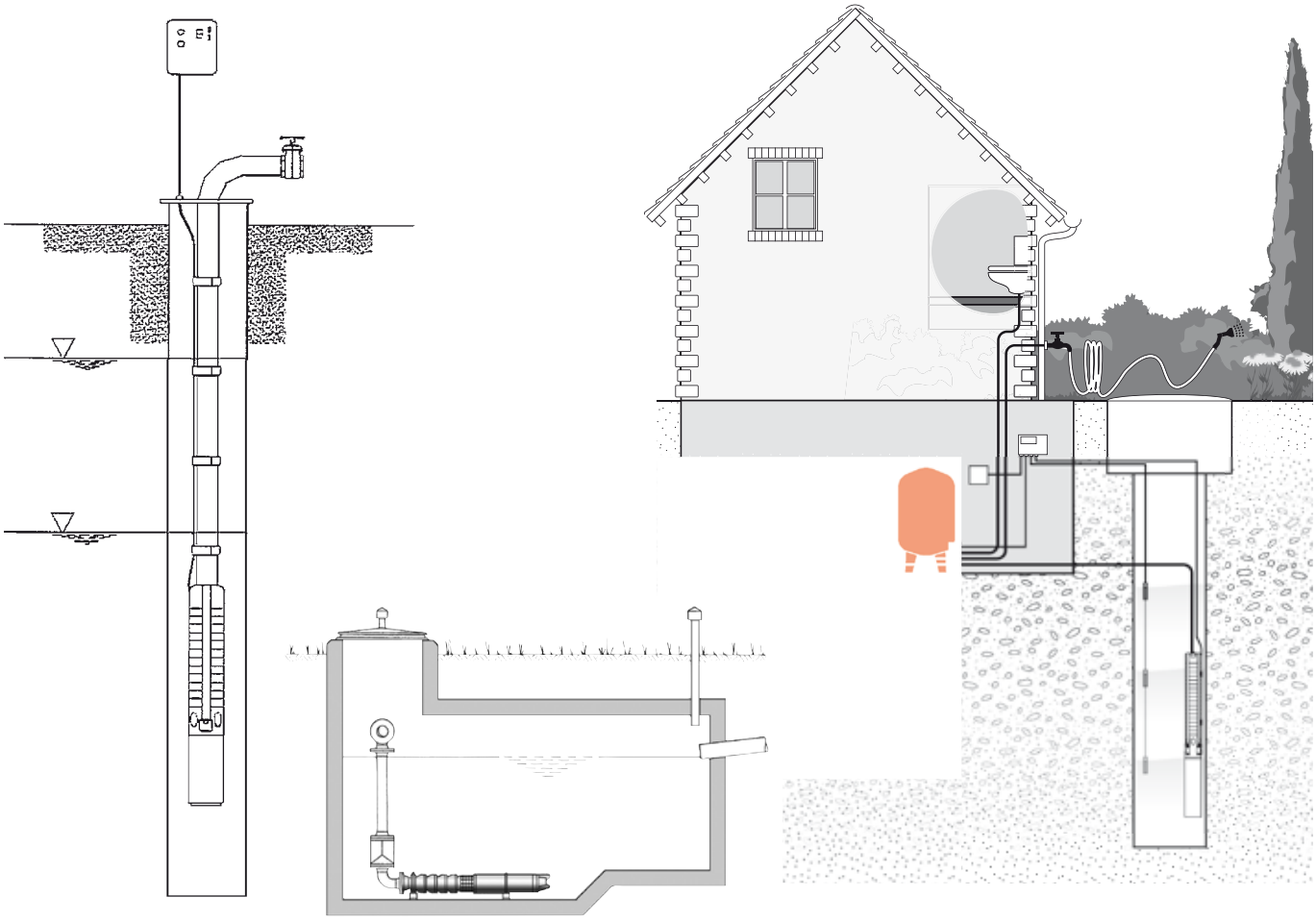

HYDRAULIC, ELECTRICAL AND DIMENSIONAL SPECIFICATIONS

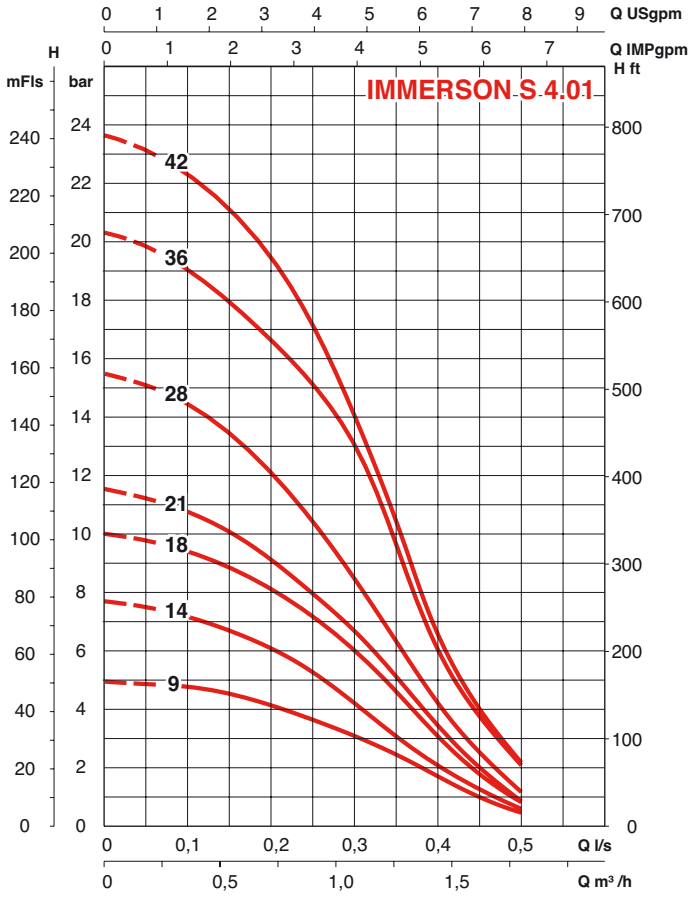

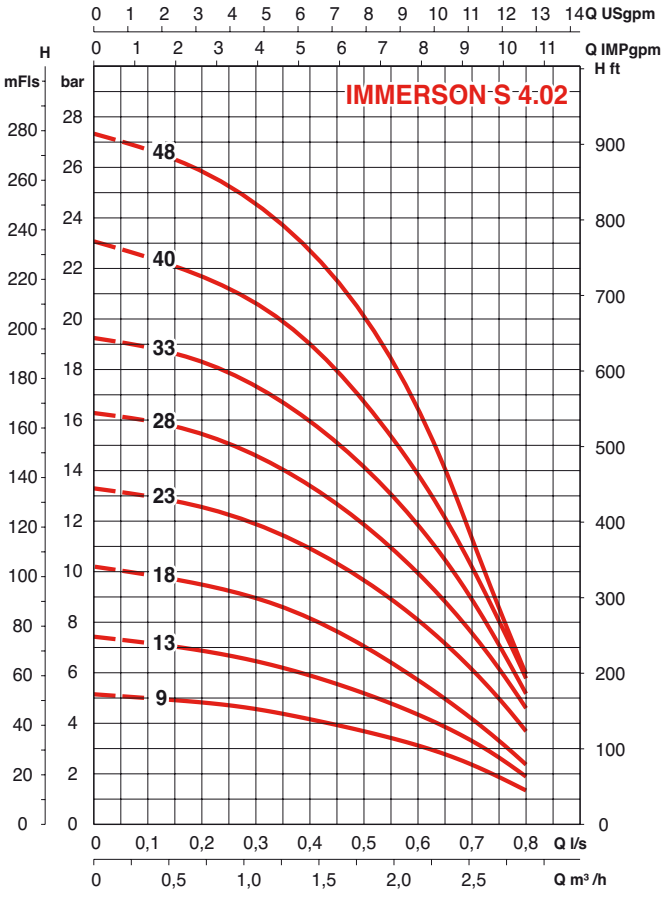

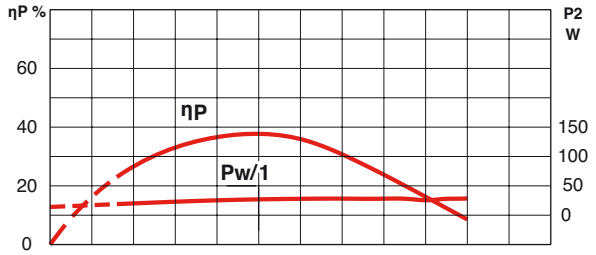

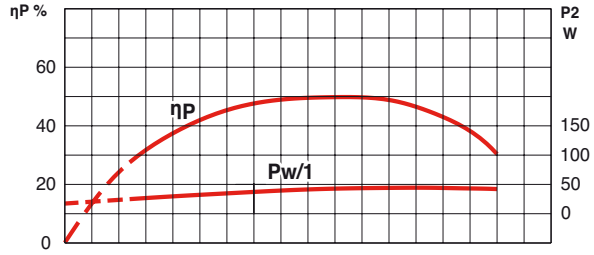

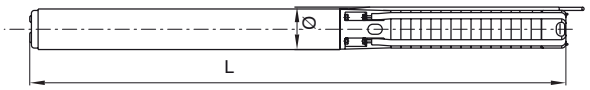

N°	Pump	Motor	Rated P.	Rated Curr.	P at shaft	Length	Ø	Weight
		230 V	P2	In	Pa	L	max.ø 3.)	Total
			kW	A	kW	mm	mm	kg
9	IS 4.01-09 -B	MP	0,37	3,2	0,27	585	98	11,7
14	IS 4.01-14 -B	MP	0,55	4,3	0,47	719	98	13,9
18	IS 4.01-18 -B	MP	0,55	4,3	0,52	803	98	14,7
21	IS 4.01-21 -B	MP	0,75	5,7	0,61	894	98	16,8
28	IS 4.01-28 -B	MP	1,1	8,6	0,85	1069	98	19,4
36	IS 4.01-36 -B	MP	1,1	8,6	1,1	1273	98	21,5
42	IS 4.01-42 -B	MP	1,5	10,6	1,4	1427	98	25,2

N°	Pump	Motor	Rated P.	Rated Curr.	P at shaft	Length	Ø	Weight
		230 V	P2	In	Pa	L	max.ø 3.)	Total
			kW	A	kW	mm	mm	kg
9	IS 4.02-09 -B	MP	0,55	4,3	0,49	614	98	12,8
13	IS 4.02-13 -B	MP	0,75	5,7	0,60	726	98	15,2
18	IS 4.02-18 -B	MP	1,1	8,6	0,85	860	98	17,3
23	IS 4.02-23 -B	MP	1,1	8,6	1,1	965	98	18,4
28	IS 4.02-28 -B	MP	1,5	10,6	1,4	1098	98	21,6
33	IS 4.02-33 -B	MP	1,5	10,6	1,5	1203	98	22,4
40	IS 4.02-40 -B	MP	2,2	15,5	1,8	1489	98	28,1
48	IS 4.02-48 -B	MP	2,2	15,5	2,1	1657	98	29,4

IMMERSON S4-S6

HYDRAULIC, ELECTRICAL AND DIMENSIONAL SPECIFICATIONS

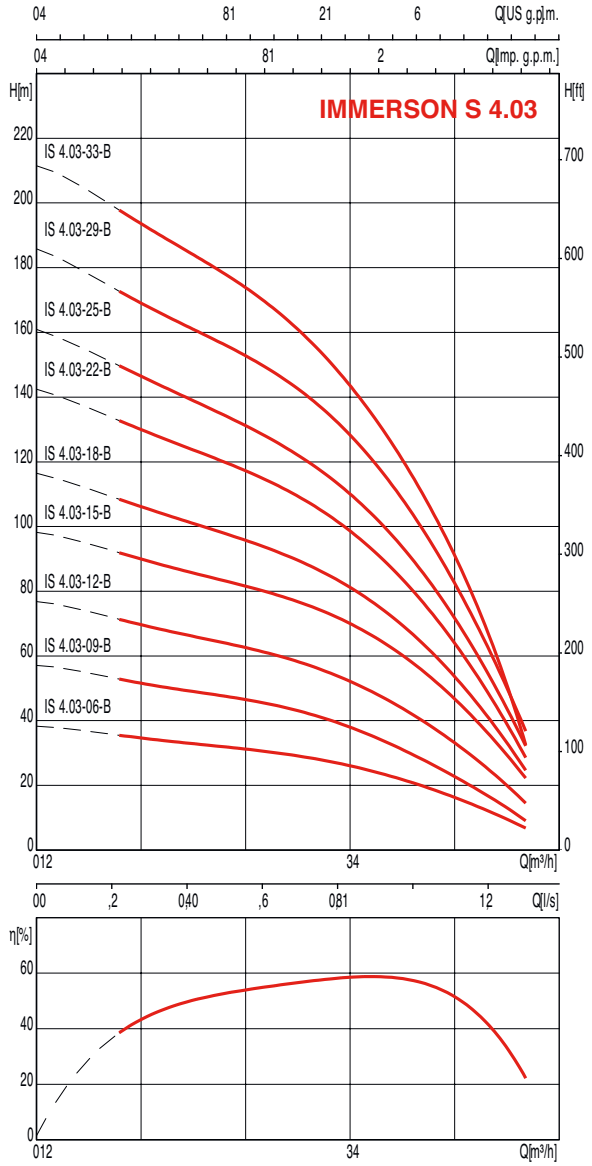

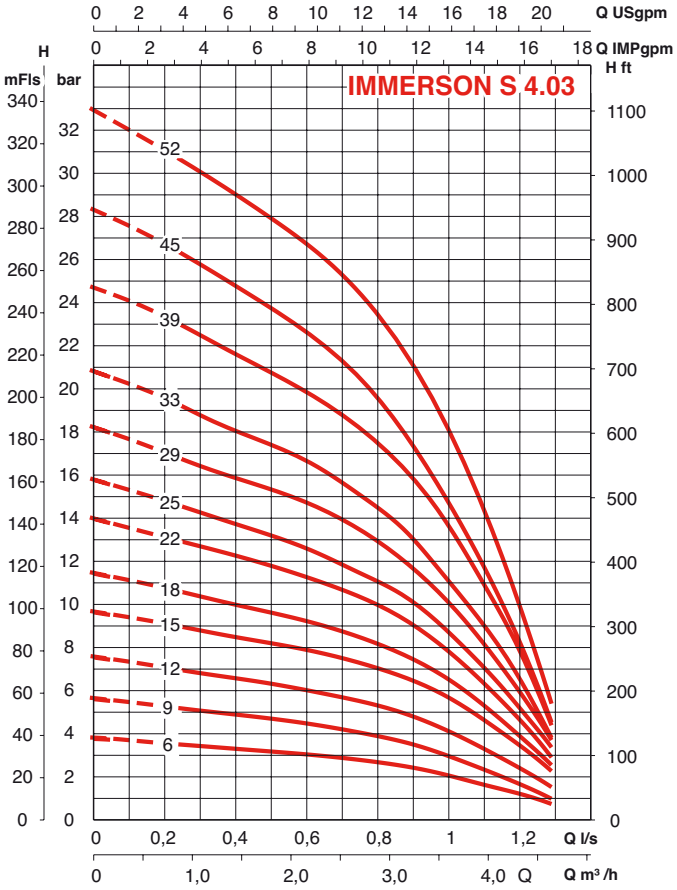

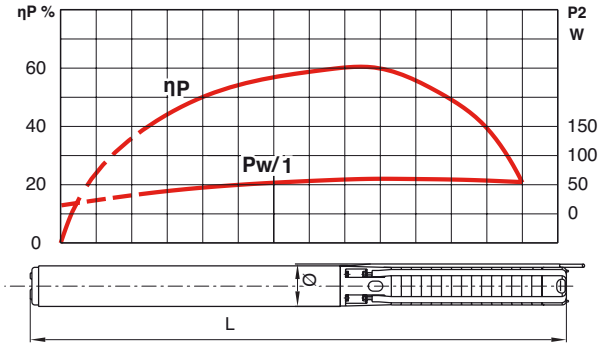

Pump	Motor	Rated P.	Rated C.	P at shaft	Length	Ø	Weight
	230 V	P2	In	Pa	L	max.ø 3.)	Total
		kW	A	kW	mm	mm	kg
IS4.03-06-MP-B	MP	0,55	4,3	0,43	564	98	12
IS4.03-09-MP-B	MP	0,75	5,7	0,58	655	98	13,8
IS4.03-12-MP-B	MP	1,1	8,6	0,81	746	98	15,7
IS4.03-15-MP-B	MP	1,1	8,6	1	809	98	16,3
IS4.03-18-MP-B	MP	1,5	10,6	1,2	901	98	18,2
IS4.03-22-MP-B	MP	1,5	10,6	1,5	985	98	19
IS4.03-25-MP-B	MP	2,2	15,5	1,7	1152	98	24,1
IS4.03-29-MP-B	MP	2,2	15,5	1,9	1236	98	24,8
IS4.03-33-MP-B	MP	2,2	15,5	2,1	1343	98	27,7

N°	Pump	Motor	Rated P.	Rated C.	P at shaft	Length	Ø	Weight
		230 V	P2	In	Pa	L	max.ø 3.)	Total
			kW	A	kW	mm	mm	kg
6	IS 4.03-06 -B	T4	0,55	1,6	0,43	529	98	11,3
9	IS 4.03-09 -B	T4	0,75	2,1	0,58	620	98	13,1
12	IS 4.03-12 -B	T4	1,1	3,0	0,81	711	98	15,1
15	IS 4.03-15 -B	T4	1,1	3,0	1,0	774	98	15,8
18	IS 4.03-18 -B	T4	1,5	4,0	1,2	866	98	17,5
22	IS 4.03-22 -B	T4	1,5	4,0	1,5	950	98	18,3
25	IS 4.03-25 -B	T4	2,2	5,9	1,7	1041	98	20,2
29	IS 4.03-29 -B	T4	2,2	5,9	1,9	1125	98	21,1
33	IS 4.03-33 -B	T4	2,2	5,9	2,1	1209	98	21,8
39	IS 4.03-39 -B	T4	3,0	7,8	2,5	1507	98	29,4
45	IS 4.03-45 -B	T4	3,0	7,8	2,8	1648	98	30,4
52	IS 4.03-52 -B	T4	3,7	9,1	3,4	1835	98	34,9

HYDRAULIC, ELECTRICAL AND DIMENSIONAL SPECIFICATIONS

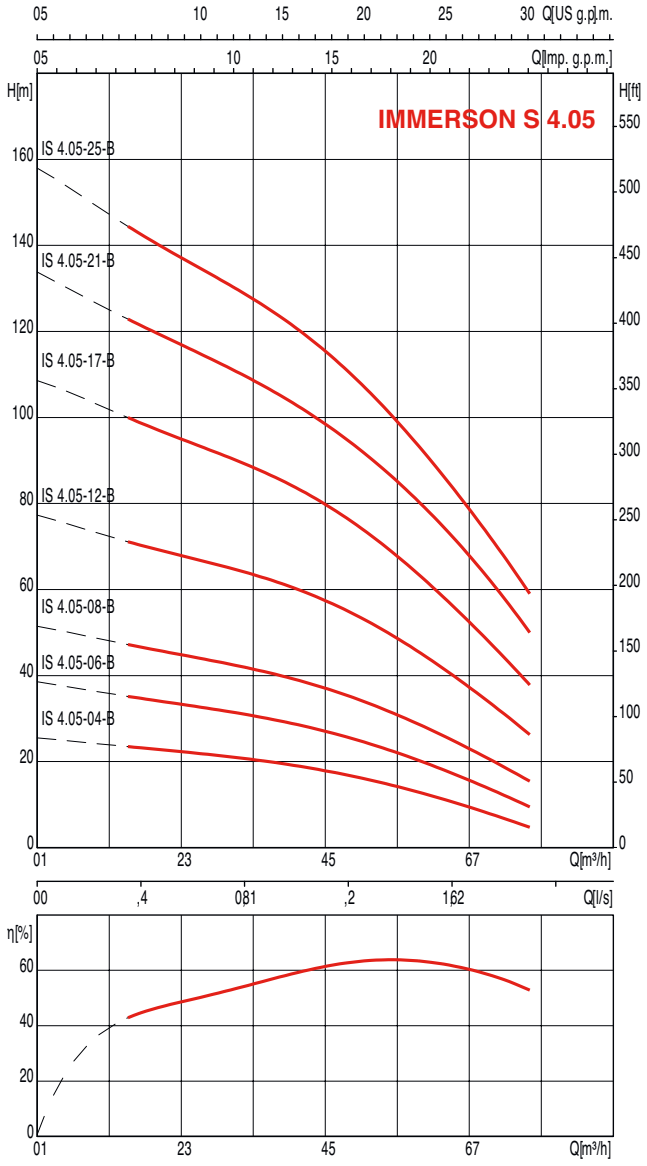

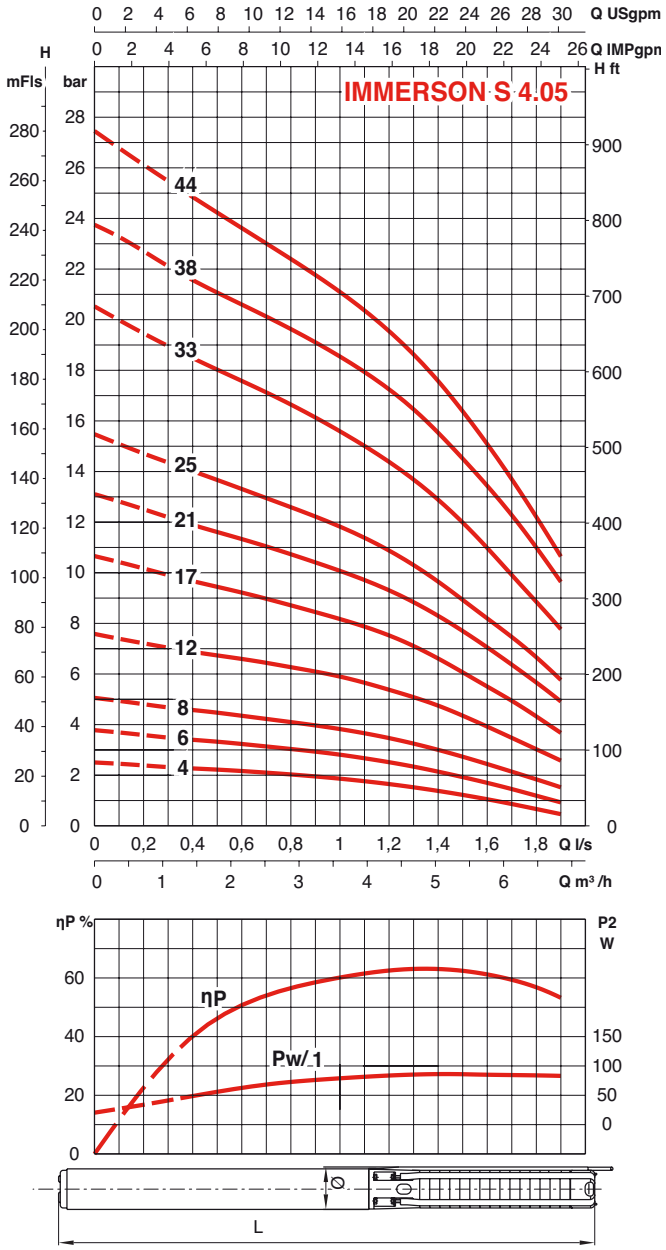

Pump	Motor	Rated P.	Rated C.	P at shaft	Length	Ø	Weight
	230 V	P2	In	Pa	L	max.ø 3.)	Total
		kW	A	kW	mm	mm	kg
IS4.05-04-MP-B	MP	0,55	4,3	0,38	522	98	11,6
IS4.05-06-MP-B	MP	0,55	4,3	0,55	564	98	12
IS4.05-08-MP-B	MP	0,75	5,7	0,75	634	98	13,6
IS4.05-12-MP-B	MP	1,5	10,6	1,2	775	98	17,1
IS4.05-17-MP-B	MP	2,2	15,5	1,6	984	98	22,5
IS4.05-21-MP-B	MP	2,2	15,5	1,9	1068	98	23,3
IS4.05-25-MP-B	MP	2,2	15,5	2,2	1152	98	24

N°	Pump	Motor	Rated P.	Rated C.	P at shaft	Length	Ø	Weight
		230 V	P2	In	Pa	L	max.ø 3.)	Total
			kW	A	kW	mm	mm	kg
4	IS 4.05-04 -B	T4	0,55	1,6	0,38	509	98	11
6	IS 4.05-06 -B	T4	0,55	1,6	0,55	529	98	11,6
8	IS 4.05-08 -B	T4	0,75	2,1	0,75	599	98	13
12	IS 4.05-12 -B	T4	1,5	4,0	1,2	740	98	16,2
17	IS 4.05-17 -B	T4	2,2	5,9	1,6	873	98	18,6
21	IS 4.05-21 -B	T4	2,2	5,9	1,9	957	98	19,5
25	IS 4.05-25 -B	T4	2,2	5,9	2,2	1041	98	20,2
33	IS 4.05-33 -B	T4	3,0	7,8	2,8	1361	98	27,5
38	IS 4.05-38 -B	T4	3,7	9,1	3,6	1506	98	32,1
44	IS 4.05-44 -B	T4	4,0	10,0	4,0	1668	98	34,8

IMMERSON S4-S6

HYDRAULIC, ELECTRICAL AND DIMENSIONAL SPECIFICATIONS

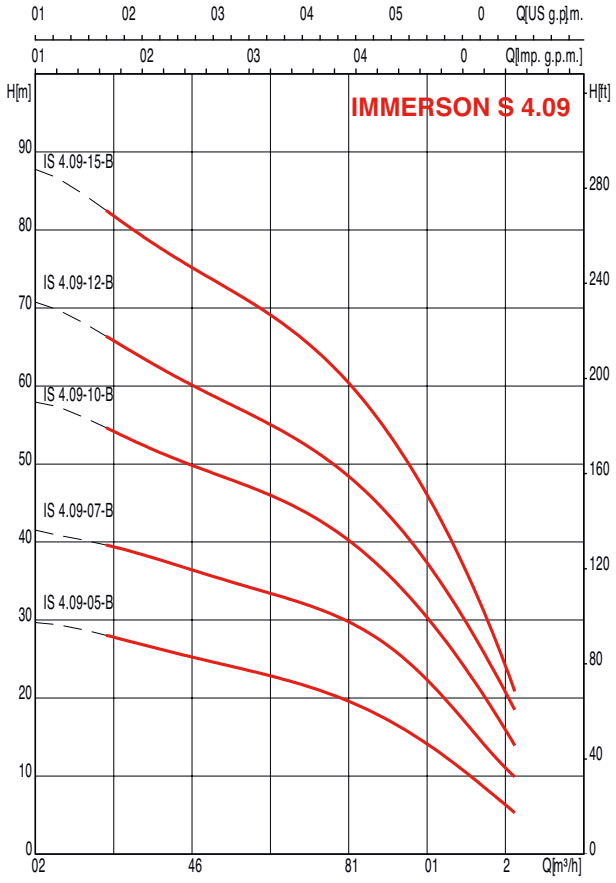

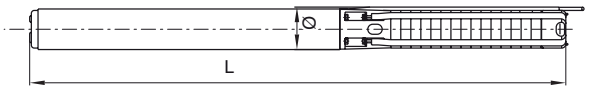

Pump	Motor	Rated P.	Rated C.	P at shaft	Length	Ø	Weight
	230 V	P2	In	Pa	L	max.ø 3.)	Total
		kW	A	kW	mm	mm	kg
IS4.09-05-MP-B	MP	1,1	8,6	0,8	742	98	16,4
IS4.09-07-MP-B	MP	1,1	8,6	1,1	823	98	17,4
IS4.09-10-MP-B	MP	1,5	10,6	1,4	978	98	20,3
IS4.09-12-MP-B	MP	2,2	15,5	1,8	1166	98	25,8
IS4.09-15-MP-B	MP	2,2	15,5	2,1	1292	98	27,3

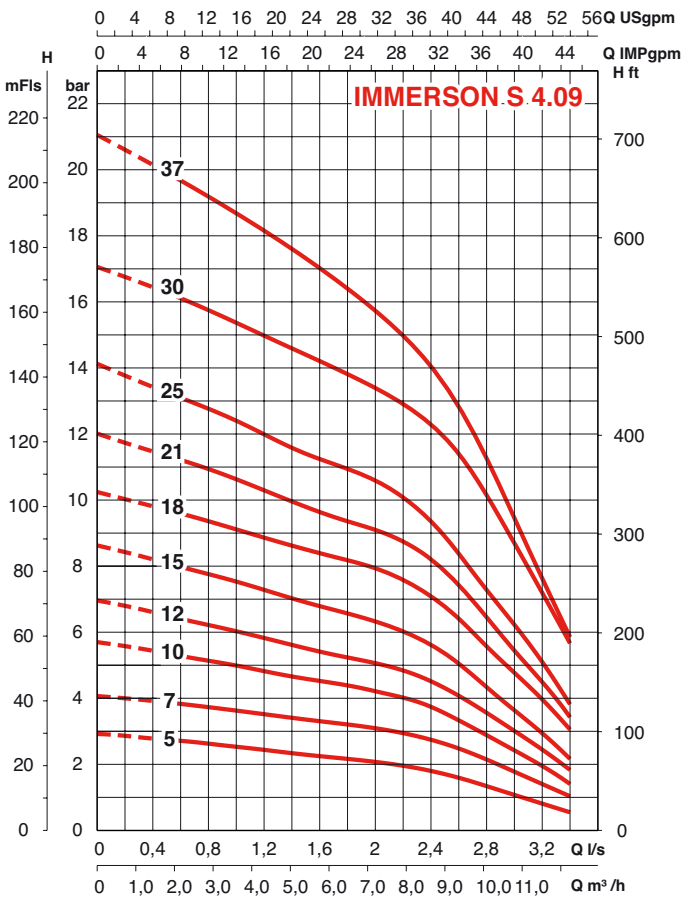

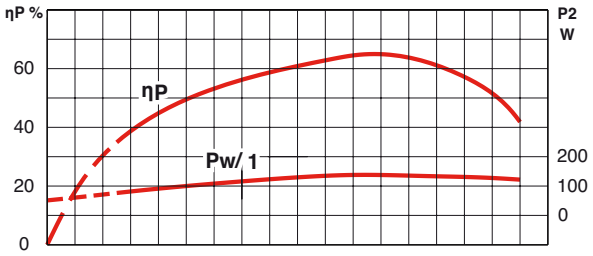

N°	Pump	Motor	Rated P.	Rated C.	P at shaft	Length	Ø	Weight
		230 V	P2	In	Pa	L	max.ø 3.)	Total
			kW	A	kW	mm	mm	kg
5	IS 4.09-05/ -B	T4	1,1	3,0	0,78	712	98	15,7
7	IS 4.09-07/ -B	T4	1,1	3,0	1,1	796	98	16,7
10	IS 4.09-10/ -B	T4	1,5	4,0	1,4	951	98	19,7
12	IS 4.09-12/ -B	T4	2,2	5,9	1,8	1063	98	21,8
15	IS 4.09-15/ -B	T4	2,2	5,9	2,1	1189	98	23,2
18	IS 4.09-18/ -B	T4	3,0	7,8	2,9	1467	98	30,4
21	IS 4.09-21/ -B	T4	3,7	9,1	3,2	1633	98	35,1
25	IS 4.09-25/ -B	T4	3,7	9,1	3,6	1801	98	38,2
30	IS 4.09-30/ -B	T4	5,5	13,7	4,7	2161	98	47,1
37	IS 4.09-37/ -B	T4	5,5	13,7	5,4	2455	98	51,4

HYDRAULIC, ELECTRICAL AND DIMENSIONAL SPECIFICATIONS

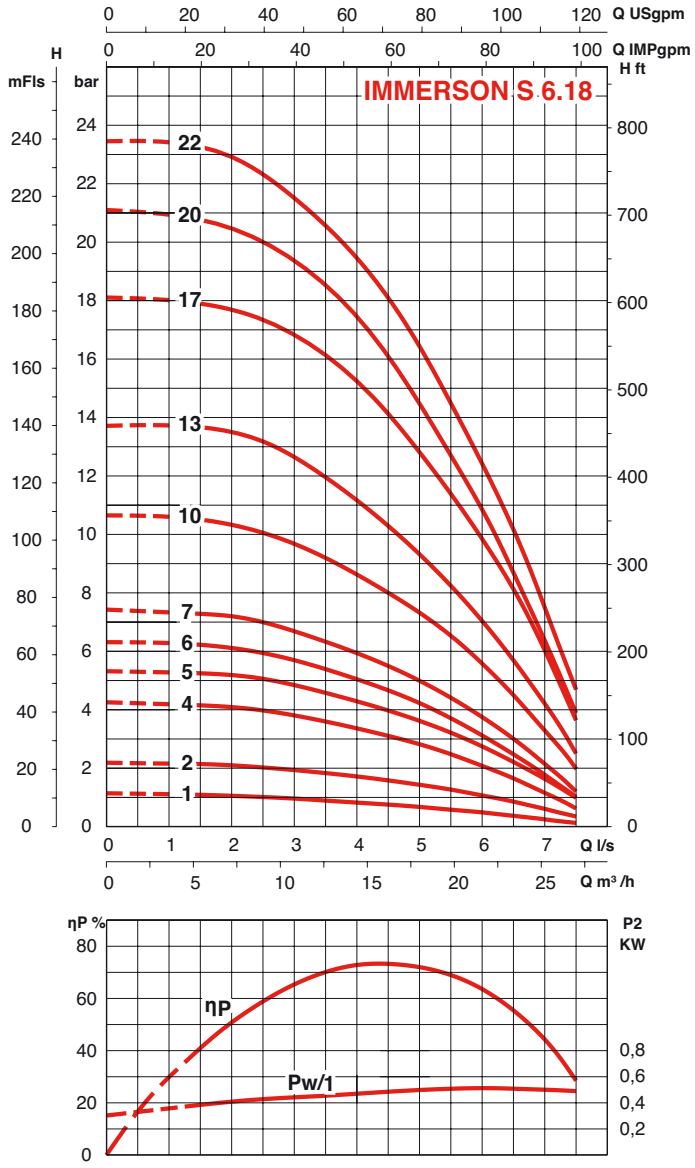

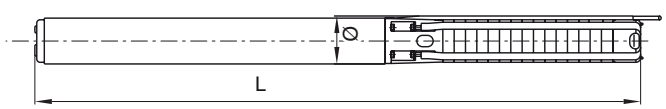

N°	Pump	Motor	Rated P.	Rated Curr.	P at shaft	Length	Ø	Weight
		230 V	P2	In	Pa	L	max.ø 3.)	Total
			kW	A	kW	mm	mm	kg
1	IS 6.18-01/ -B	T4	0,55	1,6	0,54	592	131	13,8
2	IS 6.18-02/ -B	T4	1,5	4	1,16	737	131	19
4	IS 6.18-04/ -B	T4	2,2	5,9	2,1	886	131	23,3
5	IS 6.18-05/ -B	T4	3,0	7,8	2,7	1099	131	30,7
6	IS 6.18-06/ -B	T4	3,0	7,8	3,0	1159	131	32,1
7	IS 6.18-07/ -B	T4	3,7	9,1	3,7	1260	131	36,4
10	IS 6.18-10/ -B	T4	5,5	13,7	5,5	1591	131	47,9
10	IS 06.18-10/ NB	NU 60-2/23	5,5	12,2	5,2	1557	142	63
13	IS 06.18-13/ NB	NU 60-2/24	9	19,8	6,9	1739	142	67
13	IS 6.18-13/ -B	T4	7,5	16	7,1	1715	142	66
17	IS 06.18-17/ NB	NU 60-2/32	12,5	27,5	9,3	2061	142	81
17	IS 6.18-17/ -B	T4	9,3	20,7	9,3	1990	142	74
20	IS 06.18-20/ NB	NU 60-2/32	12,5	27,5	10,6	2242	142	86
20	IS 6.18-20/ -B	T4 / SD	11	23,3	10,6	2203	142	82
22	IS 06.18-22/ NB	NU 60-2/32	12,5	27,5	11,9	2363	142	88
22	IS 6.18-22/ -B	T4 / SD	15	31,3	12,3	2389	142	90

IMMERSON S4-S6

HYDRAULIC, ELECTRICAL AND DIMENSIONAL SPECIFICATIONS

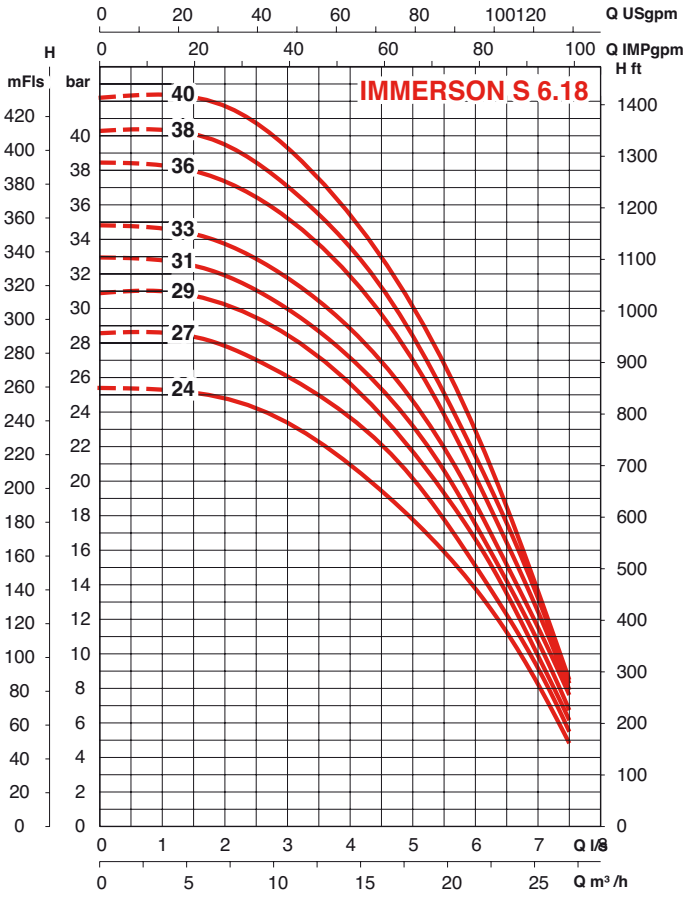

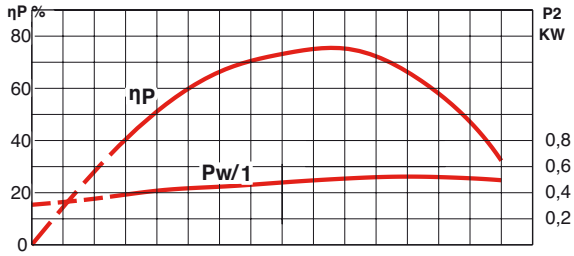

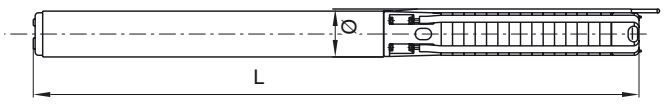

N°	Pump	Motor	Rated P.	Rated Curr.	P at shaft	Length	Ø	Weight
		230 V	P2	In	Pa	L	max.ø 3.)	Total
			kW	A	kW	mm	mm	kg
24	IS 06.18-24/ NB	NU 60-2/40	15,5	32,5	13	2564	142	99
24	IS 6.18-24/ -B	T4 / SD	15	31,3	13,4	2510	142	93
27	IS 06.18-27/ NB	NU 60-2/40	15,5	32,5	14,2	2746	142	104
27	IS 6.18-27/ -B	T4 / SD	15	31,3	14,4	2692	142	98
29	IS 06.18-29/ NB	NU 60-2/40	15,5	32,5	15,5	2867	142	107
29	IS 6.18-29/ -B	T4 / SD	18,5	38,5	15,6	2879	142	107
31	IS 06.18-31/ NB	NU 60-2/51	21	44,5	16,6	3088	142	120
31	IS 6.18-31/ -B	T4 / SD	18,5	38,5	16,6	3000	142	110
33	IS 06.18-33/ NB	NU 60-2/51	21	44,5	17,4	3209	142	122
33	IS 6.18-33/ -B	T4 / SD	18,5	38,5	17,5	3121	142	113
36	IS 06.18-36/ NB	NU 60-2/51	21	44,5	19,3	3390	142	127
36	IS 6.18-36/ -B	T4 / SD	22	45,3	19,6	3367	142	123
38	IS 06.18-38/ NB	NU 60-2/51	21	44,5	20,1	3511	142	130
38	IS 6.18-38/ -B	T4 / SD	22	45,3	20,5	3488	142	126
40	IS 06.18-40/ NB	NU 60-2/61	25	52	22	3732	142	143
40	IS 6.18-40/ -B	T4 / SD	22	45,3	22	3609	142	129

HYDRAULIC, ELECTRICAL AND DIMENSIONAL SPECIFICATIONS

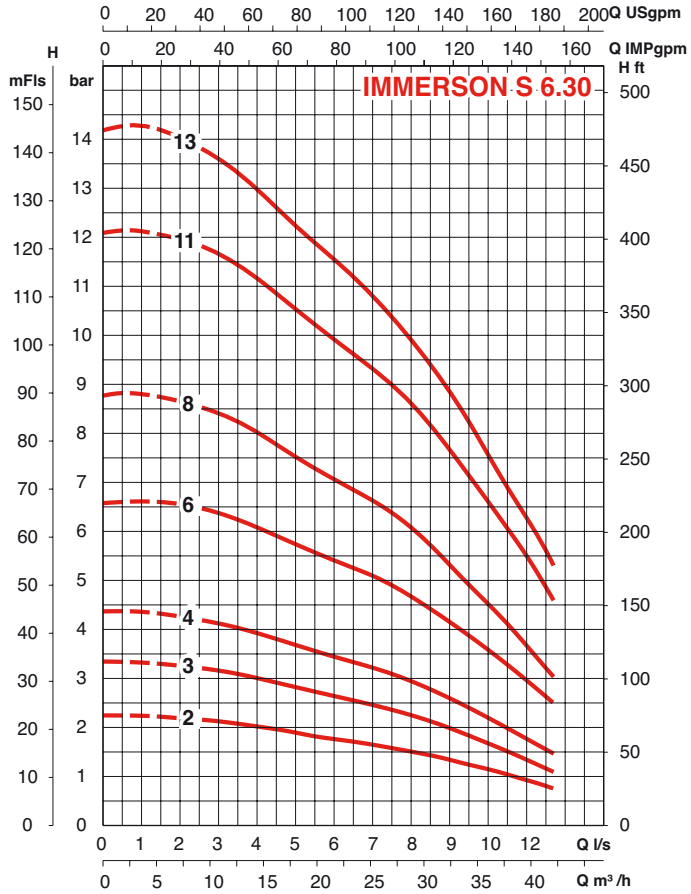

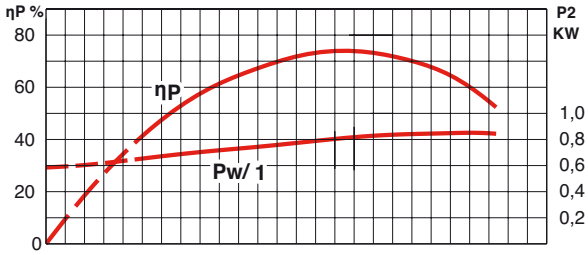

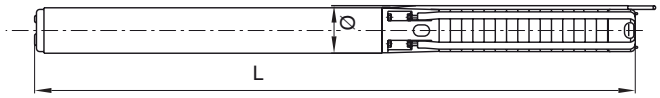

N°	Pump	Motor	Rated P.	Rated Curr.	P at shaft	Length	Ø	Weight
		230 V	P2	In	Pa	L	max.ø 3.)	Total
			kW	A	kW	mm	mm	kg
2	IS 6.30-02/ -B	T4	2,2	5,9	1,8	824	142	22,4
3	IS 6.30-03/ -B	T4	3	7,8	2,7	1072	142	30
4	IS 6.30-04/ -B	T4	3,7	9,1	3,5	1208	142	34,5
4	IS 06.30-04/ NB	NU 60-2/23	5,5	12,2	3,5	1324	149	57
6	IS 6.30-06/ -B	T4	5,5	13,7	5,5	1550	142	45,1
6	IS 06.30-06/ NB	NU 60-2/23	5,5	12,2	5,2	1516	149	60
8	IS 6.30-08/ -B	T4	7,5	16	7	1684	149	62
8	IS 06.30-08/ NB	NU 60-2/24	9	19,8	7	1708	149	64
11	IS 6.30-11/ -B	T4 / SD	11	23,3	10	2037	149	73
11	IS 06.30-11/ NB	NU 60-2/32	12,5	27,5	10	2076	149	77
13	IS 6.30-13/ -B	T4 / SD	11	23,3	11	2229	149	76
13	IS 06.30-13/ NB	NU 60-2/32	12,5	27,5	11	2268	149	80

IMMERSON S4-S6

HYDRAULIC, ELECTRICAL AND DIMENSIONAL SPECIFICATIONS

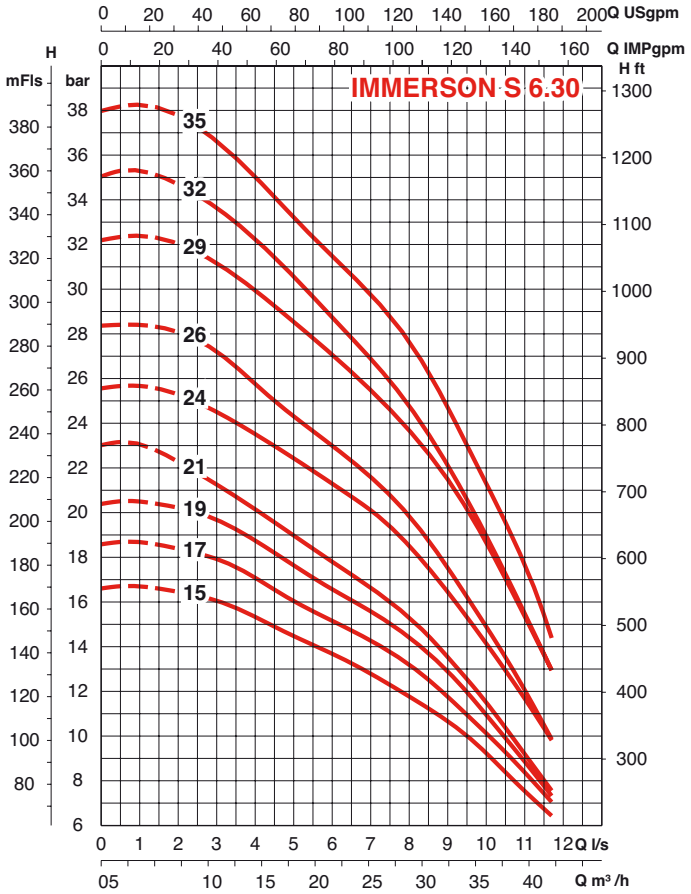

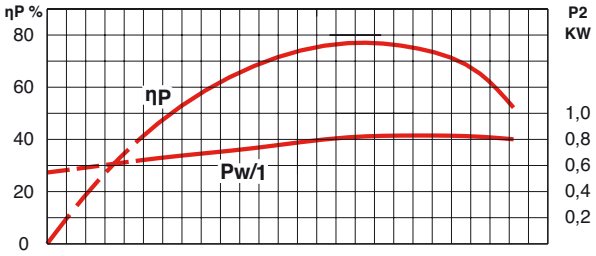

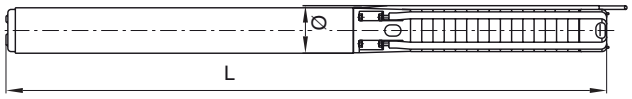

N°	Pump	Motor	Rated P.	Rated Curr.	P at shaft	Length	Ø	Weight
		230 V	P2	In	Pa	L	max.ø 3.)	Total
			kW	A	kW	mm	mm	kg
15	IS 6.30-15/ -B	T4 / SD	15	31,3	13,5	2486	149	85
15	IS 06.30-15/ NB	NU 60-2/40	15,5	32,5	13,2	2540	149	91
17	IS 6.30-17/ -B	T4 / SD	15	31,3	15	2678	149	89
17	IS 06.30-17/ NB	NU 60-2/40	15,5	32,5	14,6	2732	149	95
19	IS 6.30-19/ -B	T4 / SD	18,5	38,5	16	2936	149	99
19	IS 06.30-19/ NB	NU 60-2/51	21	44,5	16	3024	149	108
21	IS 6.30-21/ -B	T4 / SD	18,5	38,5	16,8	3128	149	102
21	IS 06.30-21/ NB	NU 60-2/51	21	44,5	16,8	3216	149	112
24	IS 6.30-24/ -B	T4 / SD	22	45,3	21,4	3481	149	113
24	IS 06.30-24/ NB	NU 60-2/61	25	52	21,4	3604	149	127
26	IS 6.30-26/ -B	T4 / SD	30	63,5	23,1	3803	149	131
26	IS 06.30-26/ NB	NU 60-2/61	25	52	22,5	3796	149	130
29	IS 6.30-29/ -B	T4 / SD	30	63,5	27,8	4091	149	136
29	IS 06.30-29/ NB	NU 601-2/74	30	67	27,3	4224	152	153
32	IS 6.30-32/ -B	T4 / SD	30	63,5	28,5	4379	149	141
32	IS 06.30-32/ NB	NU 601-2/74	30	67	28,5	4512	152	158
35	IS 6.30-35/ -B	T4 / SD	30	63,5	30	4667	149	146
35	IS 06.30-35/ NB	NU 601-2/74	30	67	30	4800	152	164

HYDRAULIC, ELECTRICAL AND DIMENSIONAL SPECIFICATIONS

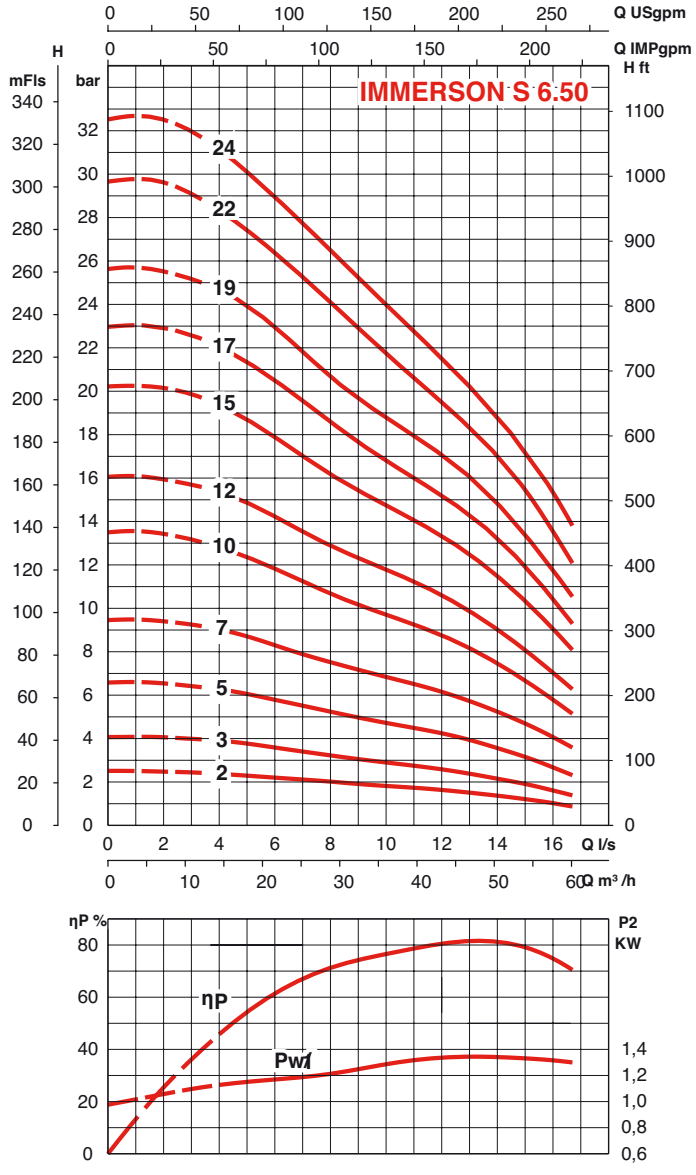

Features table next page

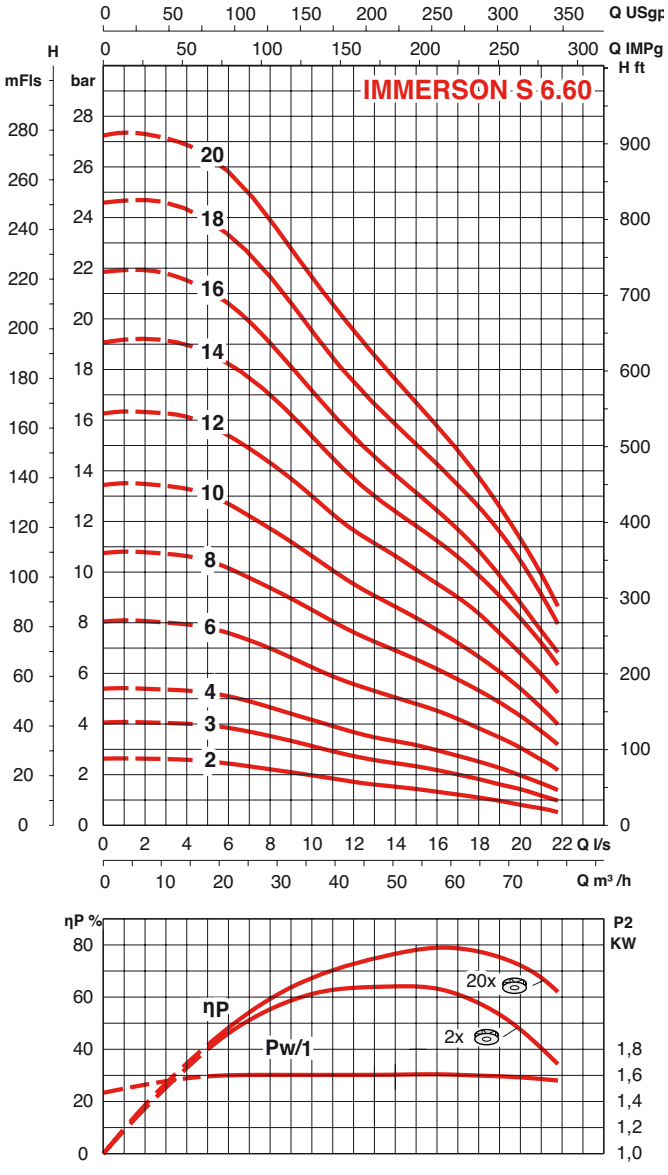

Features table next page

IMMERSON S4-S6

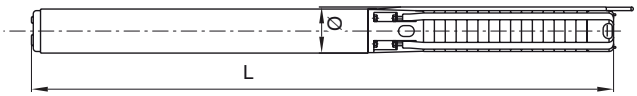

N°	Pump	Motor	Rated P.	Rated Curr.	P at shaft	Length	Ø	Weight
		230 V	P2	In	Pa	L	max.ø 3.)	Total
			kW	A	kW	mm	mm	kg
2	IS 6.50-02/ -B	T4	3	7,8	3	1010	148	29,1
3	IS 6.50-03/ -B	T4	5,5	13,7	4,3	1313	148	41,4
5	IS 6.50-05/ -B	T4	7,5	16	7,2	1481	152	59
5	IS 06.50-05/ NB	NU 60-2/24	9	19,8	7	1505	152	61
7	IS 6.50-07/ -B	T4 / SD	11	23,3	10	1772	152	70
7	IS 06.50-07/ NB	NU 60-2/32	12,5	27,5	10	1811	152	74
10	IS 6.50-10/ -B	T4 / SD	15	31,3	14,5	2176	152	82
10	IS 06.50-10/ NB	NU 60-2/40	15,5	32,5	14	2230	152	88
12	IS 6.50-12/ -B	T4 / SD	18,5	38,5	17,2	2468	152	93
12	IS 06.50-12/ NB	NU 60-2/51	21	44,5	17,2	2556	152	103
15	IS 6.50-15/ -B	T4 / SD	22	45,3	22	2872	152	106
15	IS 06.50-15/ NB	NU 60-2/61	25	52	22	2995	152	120
17	IS 6.50-17/ -B	T4 / SD	30	63,5	24,7	3228	152	125
17	IS 06.50-17/ NB	NU 60-2/61	25	52	24,2	3221	152	125
19	IS 6.50-19/ -B	T4 / SD	30	63,5	27,7	3454	152	130
19	IS 06.50-19/ NB	NU 601-2/74	30	67	36,8	3587	152	147
22	IS 6.50-22/ -B	T4 / SD	30	63,5	30	3793	152	137
22	IS 06.50-22/ NB	NU 601-2/74	30	67	30	3926	152	154
24	IS 6.50-24/ -B	T4 / SD	37	73	34,5	4387	152	174
24	IS 06.50-24/ NB	NU 611-2/82	34	71	32,6	4283	152	161
2	IS 6.60-02/ -B	T4	3,7	9,1	3,7	1050	148	31,9
3	IS 6.60-03/ -B	T4	5,5	13,7	5,5	1313	152	41,4
4	IS 6.60-04/ -B	T4	7,5	16	7	1368	152	57
4	IS 06.60-04/ NB	NU 60-2/24	9	19,8	6,7	1392	152	59
6	IS 6.60-06/ -B	T4 / SD	11	23,3	10,4	1659	152	67
6	IS 06.60-06/ NB	NU 60-2/32	12,5	27,5	10,1	1698	152	71
8	IS 6.60-08/ -B	T4 / SD	15	31,3	13,9	1950	152	78
8	IS 06.60-08/ NB	NU 60-2/40	15,5	32,5	13,4	2004	152	84
10	IS 6.60-10/ -B	T4 / SD	18,5	38,5	16	2242	152	89
10	IS 06.60-10/ NB	NU 60-2/51	21	44,5	16	2330	152	98
12	IS 6.60-12/ -B	T4 / SD	22	45,3	20,5	2533	152	99
12	IS 06.60-12/ NB	NU 60-2/51	21	44,5	20	2556	152	103
14	IS 6.60-14/ -B	T4 / SD	30	63,5	24,6	2889	152	118
14	IS 06.60-14/ NB	NU 60-2/61	25	52	23,6	2882	152	118
16	IS 6.60-16/ -B	T4 / SD	30	63,5	28	3115	152	123
16	IS 06.60-16/ NB	NU 601-2/74	30	67	27,3	3248	152	140
18	IS 6.60-18/ -B	T4 / SD	30	63,5	30	3341	152	127
18	IS 06.60-18/ NB	NU 601-2/74	30	67	29,4	3474	152	145
20	IS 6.60-20/ -B	T4 / SD	37	73	34	3952	152	167
20	IS 06.60-20/ NB	NU 611-2/82	34	71	32,5	3831	152	151

COOLING SKIRTS

If the borehole diameter is too big in relation to the pump diameter, or for installation in a tank, the fluid speed will not be sufficient to cool the motor.
A cooling skirt will then be necessary.
To check whether a skirt should be installed, refer to the technical data sheet: COOLING SKIRTS



Skirt made of AISI 316
100% stainless steel

For vertical installation:
- 1 motor cooling jacket
- 1 spacer for centring the motor in the skirt
- 3 clamping collars for securing skirts and spacers
- 1 skirt end gasket to be positioned between the skirt and the hydraulics

For horizontal installations:
- 1 motor cooling jacket
- 1 spacer for centring the motor in the skirt
- 3 clamping collars for securing skirts and spacers
- 1 skirt end gasket to be positioned between the skirt and the hydraulics
- 1 kit of supports with 2, 3 or 4 fasteners (motor and hydraulics) for stabilising the pump in the horizontal position

For horizontal installation, the skirt and fixing kit must be ordered separately.

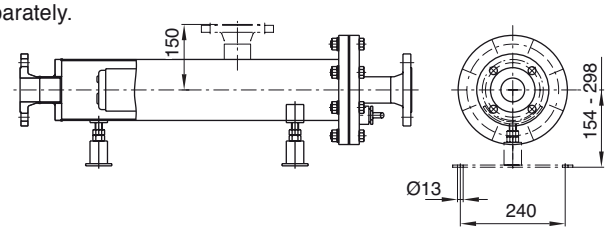

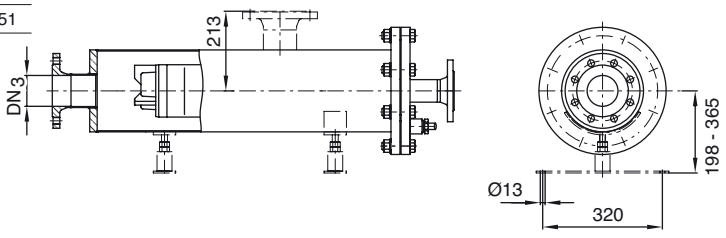

CHARACTERISTICS OF COOLING SKIRTS

Pump	Motor	Cooling skirt	Item reference Installation	
	400 V		vertical	horizontal
IS 4.01-09/ -B	MP	1x500	4064430	6037935
IS 4.01-14/ -B	MP	1x500	4064430	6038901
IS 4.01-18/ -B	MP	1x500	4064430	6038901
IS 4.01-21/ -B	MP	1x500	4064430	6038901
IS 4.01-28/ -B	MP	1x750	4064431	6037936
IS 4.01-36/ -B	MP	1x750	4064431	6037936
IS 4.01-42/ -B	MP	1x750	4064431	6037936
IS 4.02-06/ -B	MP	1x500	4064430	6037935
IS 4.02-13/ -B	MP	1x500	4064430	6037935
IS 4.02-18/ -B	MP	1x750	4064431	6037936
IS 4.02-23/ -B	MP	1x750	4064431	6037936
IS 4.02-28/ -B	MP	1x750	4064431	6037936
IS 4.02-33/ -B	MP	1x750	4064431	6037936
IS 4.02-40/ -B	MP	1x750	4064431	6037936
IS 4.02-48/ -B	MP	1x750	4064431	6037936
IS 4.03-06/ -B	MP	1x500	4064430	6037935
IS 4.03-09/ -B	MP	1x500	4064430	6037935
IS 4.03-12/ -B	MP	1x750	4064431	6037937
IS 4.03-15/ -B	MP	1x750	4064431	6037936
IS 4.03-06/ -B	MP	1x750	4064431	6037936
IS 4.03-22/ -B	MP	1x750	4064431	6037936
IS 4.03-25/ -B	MP	1x750	4064431	6037936
IS 4.03-29/ -B	MP	1x750	4064431	6037936
IS 4.03-33/ -B	MP	1x750	4064431	6037936
IS 4.05-04/ -B	MP	1x500	4064430	6037935
IS 4.05-06/ -B	MP	1x500	4064430	6037935
IS 4.05-08/ -B	MP	1x500	4064430	6037935
IS 4.05-12/ -B	MP	1x750	4064431	6037937
IS 4.05-17/ -B	MP	1x750	4064431	6037937
IS 4.05-21/ -B	MP	1x750	4064431	6037936
IS 4.05-25/ -B	MP	1x750	4064431	6037936
IS 4.09-05/ -B	MP	1x750	4064431	6037937
IS 4.09-07/ -B	MP	1x750	4064431	6037937
IS 4.09-10/ -B	MP	1x750	4064431	6037936
IS 4.09-12/ -B	MP	1x750	4064431	6037936
IS 4.09-15/ -B	MP	1x750	4064431	6037936
IS 4.14-05/ -B	MP	1x750	4064431	6037937
IS 4.14-07/ -B	MP	1x750	4064431	6037937
IS 4.01-09/ -B	T4	1x500	4064430	6037935
IS 4.01-14/ -B	T4	1x500	4064430	6038901
IS 4.01-18/ -B	T4	1x500	4064430	6038901
IS 4.01-21/ -B	T4	1x500	4064430	6038901
IS 4.01-28/ -B	T4	1x500	4064430	6038901
IS 4.01-36/ -B	T4	1x500	4064430	6038901
IS 4.01-42/ -B	T4	1x500	4064430	6038901
IS 4.02-06/ -B	T4	1x500	4064430	6037935
IS 4.02-13/ -B	T4	1x500	4064430	6038901
IS 4.02-18/ -B	T4	1x500	4064430	6038901
IS 4.02-23/ -B	T4	1x500	4064430	6038901
IS 4.02-28/ -B	T4	1x500	4064430	6038901
IS 4.02-33/ -B	T4	1x500	4064430	6038901
IS 4.02-40/ -B	T4	1x750	4064431	6037936
IS 4.02-48/ -B	T4	1x750	4064431	6037936
IS 4.03-06/ -B	T4	1x500	4064430	6037935
IS 4.03-09/ -B	T4	1x500	4064430	6037935
IS 4.03-12/ -B	T4	1x500	4064430	6037935
IS 4.03-15/ -B	T4	1x500	4064430	6038901
IS 4.03-06/ -B	T4	1x500	4064430	6038901
IS 4.03-22/ -B	T4	1x500	4064430	6038901
IS 4.03-25/ -B	T4	1x750	4064431	6037936
IS 4.03-29/ -B	T4	1x750	4064431	6037936
IS 4.03-33/ -B	T4	1x750	4064431	6037936
IS 4.03-39/ -B	T4	1x750	4064431	6037936
IS 4.03-45/ -B	T4	1x750	4064431	6037936
IS 4.03-52/ -B	T4	1x750	4064431	6037936
IS 4.05-04/ -B	T4	1x500	4064430	6037935
IS 4.05-06/ -B	T4	1x500	4064430	6037935
IS 4.05-08/ -B	T4	1x500	4064430	6037935
IS 4.05-12/ -B	T4	1x500	4064430	6037935
IS 4.05-17/ -B	T4	1x750	4064431	6037936
IS 4.05-21/ -B	T4	1x750	4064431	6037936
IS 4.05-25/ -B	T4	1x750	4064431	6037936
IS 4.05-33/ -B	T4	1x750	4064431	6037936
IS 4.05-38/ -B	T4	1x750	4064431	6037936
IS 4.05-44/ -B	T4	1x750	4064431	6037936
IS 4.09-05/ -B	T4	1x750	4064431	6037937
IS 4.09-07/ -B	T4	1x750	4064431	6037937
IS 4.09-10/ -B	T4	1x750	4064431	6037936
IS 4.09-12/ -B	T4	1x750	4064431	6037936
IS 4.09-15/ -B	T4	1x750	4064431	6037936
IS 4.09-18/ -B	T4	1x750	4064431	6037936
IS 4.09-21/ -B	T4	1x1000	4064432	6038903
IS 4.09-25/ -B	T4	1x1000	4064432	6038903
IS 4.09-30/ -B	T4	1x1000	4064432	6038904
IS 4.09-37/ -B	T4	1x1000	4064432	6038904
IS 6.18-01/ -B	T4	1x350	6041871	6042336
IS 6.18-02/ -B	T4	1x425	6041873	6042338
IS 6.18-04/ -B	T4	1x650	6041894	6042357
IS 6.18-05/ -B	T4	1x650	6041894	6042357
IS 6.18-06/ -B	T4	1x650	6041894	6042357
IS 6.18-07/ -B	T4	1x650	6041894	6042357
IS 6.18-10/ -B	T4	1x815	6041890	6042353
IS 06.18-10/ NB	NU 60-2/23	1x815	6041897	6042360
IS 06.18-13/ NB	NU 60-2/24	1x815	6041897	6042360
IS 6.18-13/ -B	T4	1x815	6041891	6042354
IS 06.18-17/	NU 60-2/32	1x815	6041897	6042360

IMMERSON S4-S6

CHARACTERISTICS OF COOLING SKIRTS

Pump	Motor	Cooling skirt	Item reference Installation	
	400 V		vertical	horizontal
IS 6.18-17/ -B	T4	1x815	6041891	6042354
IS 06.18-20/ NB	NU 60-2/32	1x815	6041897	6042360
IS 6.18-20/ -B	T4 / SD	1x815	6041891	6042354
IS 06.18-22/ NB	NU 60-2/32	1x815	6041897	6042360
IS 6.18-22/ -B	T4 / SD	1x815	6041891	6042354
IS 06.18-24/ NB	NU 60-2/40	1x925	6042320	6042370
IS 6.18-24/ -B	T4 / SD	1x815	6041891	6042354
IS 06.18-27/ NB	NU 60-2/40	1x925	6042320	6042370
IS 6.18-27/ -B	T4 / SD	1x815	6041891	6042354
IS 06.18-29/ NB	NU 60-2/40	1x925	6042320	6042370
IS 6.18-29/ -B	T4 / SD	1x925	6041883	6042347
IS 06.18-31/ NB	NU 60-2/51	1x1000	6042318	6042369
IS 6.18-31/ -B	T4 / SD	1x925	6041883	6042347
IS 06.18-33/ NB	NU 60-2/51	1x1000	6042318	6042369
IS 6.18-33/ -B	T4 / SD	1x925	6041883	6042347
IS 06.18-36/ NB	NU 60-2/51	1x1000	6042318	6042369
IS 6.18-36/ -B	T4 / SD	1x1000	6041886	6042349
IS 06.18-38/ NB	NU 60-2/51	1x1000	6042318	6042369
IS 6.18-38/ -B	T4 / SD	1x1000	6041886	6042349
IS 06.18-40/ NB	NU 60-2/61	2x650	6041906	6042367
IS 6.18-40/ -B	T4 / SD	1x1000	6041886	6042349
IS 6.30-02/ -B	T4	1x650	6041894	6042357
IS 6.30-03/ -B	T4	1x650	6041894	6042357
IS 6.30-04/ -B	T4	1x650	6041894	6042357
IS 06.30-04/ NB	NU 60-2/23	1x815	6041897	6042360
IS 6.30-06/ -B	T4	1x815	6041890	6042353
IS 06.30-06/ NB	NU 60-2/23	1x815	6041897	6042360
IS 6.30-08/ -B	T4	1x815	6041891	6042354
IS 06.30-08/ NB	NU 60-2/24	1x815	6041897	6042360
IS 6.30-11/ -B	T4 / SD	1x815	6041891	6042354
IS 06.30-11/ NB	NU 60-2/32	1x815	6041897	6042360
IS 6.30-13/ -B	T4 / SD	1x815	6041891	6042354
IS 06.30-13/ NB	NU 60-2/32	1x815	6041897	6042360
IS 6.30-15/ -B	T4 / SD	1x925	6041883	6042347
IS 06.30-15/ NB	NU 60-2/40	1x925	6042320	6042370
IS 6.30-17/ -B	T4 / SD	1x925	6041883	6042347
IS 06.30-17/ NB	NU 60-2/40	1x925	6042320	6042370
IS 6.30-19/ -B	T4 / SD	1x1000	6041886	6042349
IS 06.30-19/ NB	NU 60-2/51	1x1000	6042318	6042369
IS 6.30-21/ -B	T4 / SD	1x1000	6041886	6042349
IS 06.30-21/ NB	NU 60-2/51	1x1000	6042318	6042369
IS 6.30-24/ -B	T4 / SD	1x1000	6041886	6042349
IS 06.30-24/ NB	NU 60-2/61	2x650	6041906	6042367
IS 6.30-26/ -B	T4 / SD	2x650	6041875	6042339
IS 06.30-26/ NB	NU 60-2/61	2x650	6041906	6042367
IS 6.30-29/ -B	T4 / SD	2x650	6041875	6042339
IS 06.30-29/ NB	NU 601-2/74	1x815+1x650	6041904	6042365
IS 6.30-32/ -B	T4 / SD	2x650	6041875	6042339
IS 06.30-32/ NB	NU 601-2/74	1x815+1x650	6041904	6042365
IS 6.30-35/ -B	T4 / SD	2x650	6041875	6042339
IS 06.30-35/ NB	NU 601-2/74	1x815+1x650	6041904	6042365

Pump	Motor	Cooling skirt	Item reference Installation	
	400 V		vertical	horizontal
IS 6.50-02/ -B	T4	1x650	6041896	6042359
IS 6.50-03/ -B	T4	1x815	6041892	6042355
IS 6.50-05/ -B	T4	1x815	6041879	6042343
IS 06.50-05/ NB	NU 60-2/24	1x815	6042322	6042372
IS 6.50-07/ -B	T4 / SD	1x815	6041879	6042343
IS 06.50-07/ NB	NU 60-2/32	1x815	6042322	6042372
IS 6.50-10/ -B	T4 / SD	1x925	6041884	6042348
IS 06.50-10/ NB	NU 60-2/40	1x1000	6042316	6042368
IS 6.50-12/ -B	T4 / SD	1x1000	6041887	6042350
IS 06.50-12/ NB	NU 60-2/51	2x650	6041905	6042366
IS 6.50-15/ -B	T4 / SD	1x1000	6041887	6042350
IS 06.50-15/ NB	NU 60-2/61	2x650	6041905	6042366
IS 6.50-17/ -B	T4 / SD	2x650	6041876	6042340
IS 06.50-17/ NB	NU 60-2/61	2x650	6041905	6042366
IS 6.50-19/ -B	T4 / SD	2x650	6041876	6042340
IS 06.50-19/ NB	NU 601-2/74	1x815+1x650	6041903	6042364
IS 6.50-22/ -B	T4 / SD	2x650	6041876	6042340
IS 06.50-22/ NB	NU 601-2/74	1x815+1x650	6041903	6042364
IS 6.50-24/ -B	T4 / SD	1x925+1x815	6041878	6042342
IS 06.50-24/ NB	NU 611-2/82	2x815	6041901	6042362
IS 6.60-02/ -B	T4	1x650	6041896	6042359
IS 6.60-03/ -B	T4	1x815	6041892	6042355
IS 6.60-04/ -B	T4	1x815	6041879	6042343
IS 06.60-04/ NB	NU 60-2/24	1x815	6042322	6042372
IS 6.60-06/ -B	T4 / SD	1x815	6041879	6042343
IS 06.60-06/ NB	NU 60-2/32	1x815	6042322	6042372
IS 6.60-08/ -B	T4 / SD	1x925	6041884	6042348
IS 06.60-08/ NB	NU 60-2/40	1x1000	6042316	6042368
IS 6.60-10/ -B	T4 / SD	1x1000	6041887	6042350
IS 06.60-10/ NB	NU 60-2/51	2x650	6041905	6042366
IS 6.60-12/ -B	T4 / SD	1x1000	6041887	6042350
IS 06.60-12/ NB	NU 60-2/51	2x650	6041905	6042366
IS 6.60-14/ -B	T4 / SD	2x650	6041876	6042340
IS 06.60-14/ NB	NU 60-2/61	2x650	6041905	6042366
IS 6.60-16/ -B	T4 / SD	2x650	6041876	6042340
IS 06.60-16/ NB	NU 601-2/74	1x815+1x650	6041903	6042364
IS 6.60-18/ -B	T4 / SD	2x650	6041876	6042340
IS 06.60-18/ NB	NU 601-2/74	1x815+1x650	6041903	6042364
IS 6.60-20/ -B	T4 / SD	1x925+1x815	6041878	6042342
IS 06.60-20/ NB	NU 611-2/82	2x815	6041901	6042362

RECOMMENDED ACCESSORIES

• YN 7000 control boxes

- Control via level-sensing electrode on the flow-switch with and without timing.
- 240 - 400 V/12V, 50 or 60 Hz transformer
- Voltage can be switched between 230V and 400 V just by moving a fuse.
- Motor overload protection by thermal relay.



• Low-water control box (BME)



only for motor currents below 10 A in single-phase with:

- 2 indicator lights on front: red = low water, green = power on.
- Automatic reset configurable from 30 seconds to 20 minutes.
- Operates with a level-sensing electrode and a 30 m cable, connected to the control box by a pin connector.
- Connects to mains power supply via a standard 2 pole + earth wall socket.

Cable cross-section in mm²

Power in Kw	Intensity in A	1,5	2,5	4	6	10	16	25	35	50	70	95	120	150	185	240
0,5	2,3	100	165	265	395											
1	4,6	50	84	135	200	335	530									
1,5	6,8	33	57	90	130	225	355	565								
2	9	25	43	88	100	170	285	430	595							
2,5	11,5	20	34	54	90	135	210	340	470	630						
3	13,5	17	29	45	66	110	190	285	395	520						
3,5	16	14	34	39	56	96	155	245	335	395	580					
4	18		21	34	49	84	135	210	295	350	515					
4,5	20		19	30	44	75	120	190	260	315	460	630				
5	23			27	39	68	105	170	235	260	385	530				
6	27			23	32	56	90	140	195	225	230	460	570			
7	32				28	48	76	120	170	195	290	400	500	620		
8	36					42	67	105	145	175	255	355	440	550		
9	41					38	60	94	130	155	230	320	400	495	615	
10	45					34	54	94	120	130	190	265	330	410	510	
12	55						45	70	98	110	165	230	285	350	435	560
14	64						38	60	84	99	145	200	250	305	380	500
16	73							53	74	88	125	175	220	270	340	440
18	82							47	65	79	115	160	200	245	310	400
20	91								59	64	98	130	150	195	245	315
25	114										77	105	135	165	205	265
30	136											90	115	140	175	225
35	159					Length in metre						90	100	125	155	200
40	182												89	110	135	175
45	205													98	120	160
50	227														100	140
60	273															115
70	318															

FEATURES

a) Electrical

- MP: 230 V - 50 Hz single-phase motor with permanent starting capacitor.
- T4: 400 V - 50 Hz three-phase motor.
- SD: star delta starting

NB

- In both SINGLE-PHASE and THREE-PHASE, provide a control and low-water protection box with level-sensing electrodes.

On request: connection of motor power supply to removable cable via heat-shrinkable junctions and flat, 4-conductor cable..

b) Fitting

- Vertically or horizontally.

Connection to the system :

- By rigid threaded steel piping - Ø G11/4 or Ø G2 depending on model of pump.

If connecting with flexible hose, support the pump on a cable attached to two lifting rings fitted to the discharge housing.

c) Packaging

- Delivered in packaging with motor output cable 4 x 1.5 mm² - length 1.5 or 3.5 m, depending on model.

d) Maintenance

- Standard exchange of appliance or repair of the hydraulic part and motor.

Motor cable kit

Motor flat power cable
4 x 1,5 mm² with connector and cable clips (cable junction created in factory).

Ref. Order	Cable length
KIT 4 x 1,5 x 15	15 m
KIT 4 x 1,5 x 25	25 m
KIT 4 x 1,5 x 35	35 m
KIT 4 x 1,5 x 45	45 m

Motor cable

Sold per metre in multiples of 5 m.

Ref. Order	Cross-section mm²
CAB 4 x 1,5	1,5
CAB 4 x 2,5	2,5
CAB 4 x 4	4,0
CAB 4 x 6	6,0
CAB 4 x 10	10,0

IMMERSON S4-S6

NOTE

IC 8

SUBMERGED PUMPS
for 8″ bore holes
50 Hz

OPERATING RANGES

Flow rates of up to:	**300 m³/h**
Manometric heads of up to:	**400 mCE**
Max. water temperature:	**+3°to 30°C**
Max. sand content:	**50g/m³**
(nominal diameter) discharge :	**50 to 152 mm**
Reference MEI*: :	**≥ 0,10**

*Minimum Efficiency Index

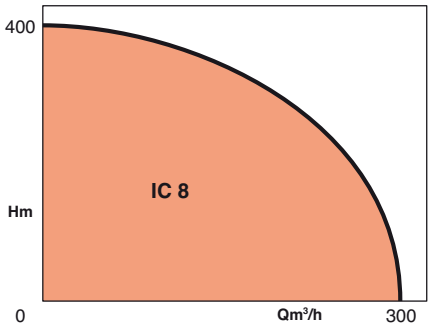

APPLICATIONS

- Supplying water to towns and rural areas
- Watering and irrigation
- Pressure boosting
- Drawdown of groundwater on worksites
- Mine drainage
- Industrial applications

For any clean water pumping from water tables and deep wells.

ADVANTAGES

- **Very deep pumping.**
- **No maintenance: self-lubricating bearings and bushings.**
- **Bronze impellers and diffusers for an extended service life.**
- **Built-in non-return valve.**
- **Submerged Franklin motors satisfying the hygiene requirements for maintaining water purity.**
- **Vertical or horizontal installation according to the number of stages.**



• IC-8

IC 8

DESIGN

• Hydraulic part:

- Multi-stage centrifugal pump
- Radial impeller design for IC8-42
- Semi-axial impeller design for IC8-80 & IC8-100
- Stages are held together by tie rods (rather than by an external shell)

Suction housing between pump and motor protected by a suction mesh
Threaded suction housing with integral non-return valve

• Motor part (submerged 2,800 rpm):

- 2 poles, three-phase, rotor in short circuit.
- Stator coated or embedded in resin, depending on model of motor (NEMA).
- Generously dimensioned shaft supported by water-lubricated shaft bearings.
- Rigid coupling between pump and motor.
- Compensation chamber.
- Double-acting lower thrust plate absorbing the axial thrust.

Frequency:	50 Hz (option 60 Hz)
Insulation class:	155 (F)
Protection:	IP 68
Min. water velocity:	
in the borehole:	16 cm/s
Starts/hour:	20 max.
Three-phase voltage	(50Hz): 400V +6%-10%
	(60Hz): 380V ±6%

HYDRAULIC PRESELECTION RANGES

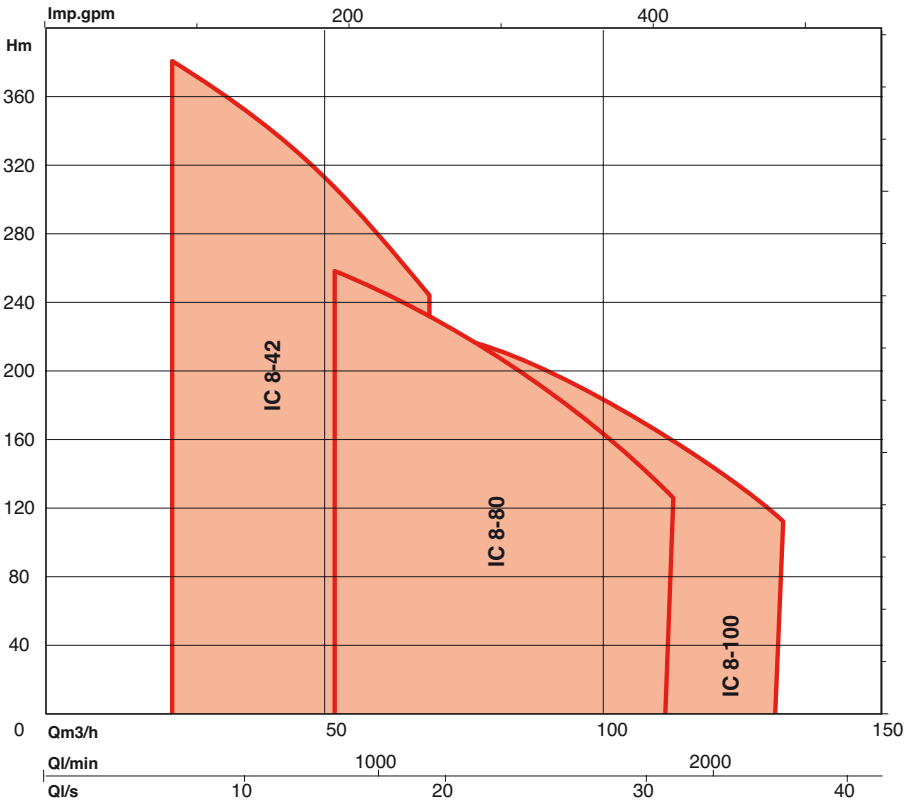

IDENTIFICATION

IC 8-80 12 -B

- Pump code
- DN pump in inches
- Nominal flow rate in m^3/h
- Number of stages
- Technical development index

BASIC CONSTRUCTION

Parts		Materials
Main	IC8-42	IC8-80, IC8-100,
Delivery valve housing	GG20	GG20
Suction housing	GG20	GG20
Stage housing	GG20	-
Diffuser	BRONZE	-
Diffuser insert housing	-	GG 20
Impeller	BRONZE	BRONZE
Suction ring	-	BRONZE
Strainer	AISI 304 - 1,4301	AISI 304 - 1,4301
Junction	AISI 410 - 1,4006	AISI 410 - 1,4006
Jacket under bearing bushing	AISI 410 - 1,4006	AISI 410 - 1,4006
Bearing bushing	BRONZE	BRONZE
Tie rods	En-3A(BS970) - 1,0402	-
Shaft	AISI 410 - 1,4006	AISI 410 - 1,4006

HYDRAULIC PERFORMANCES

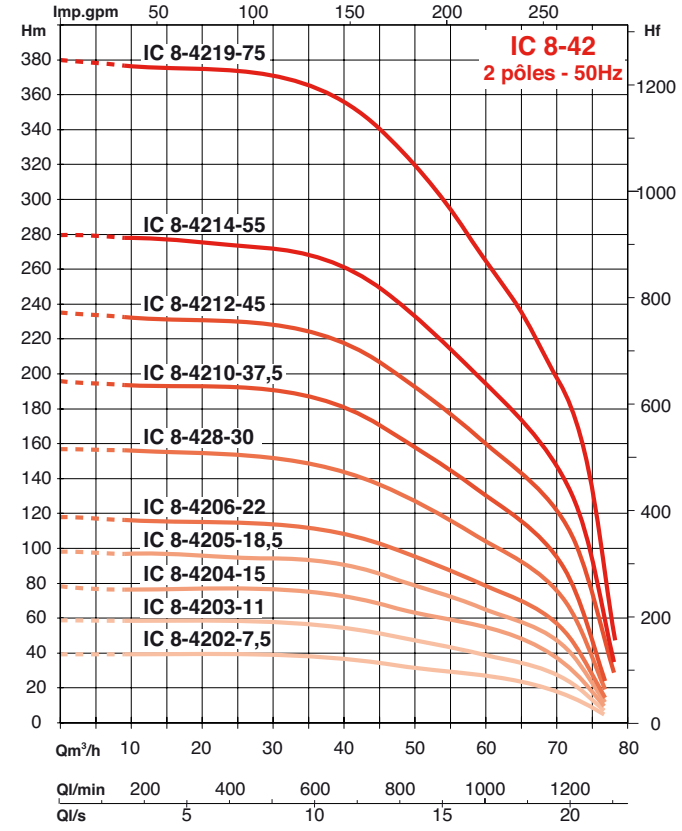

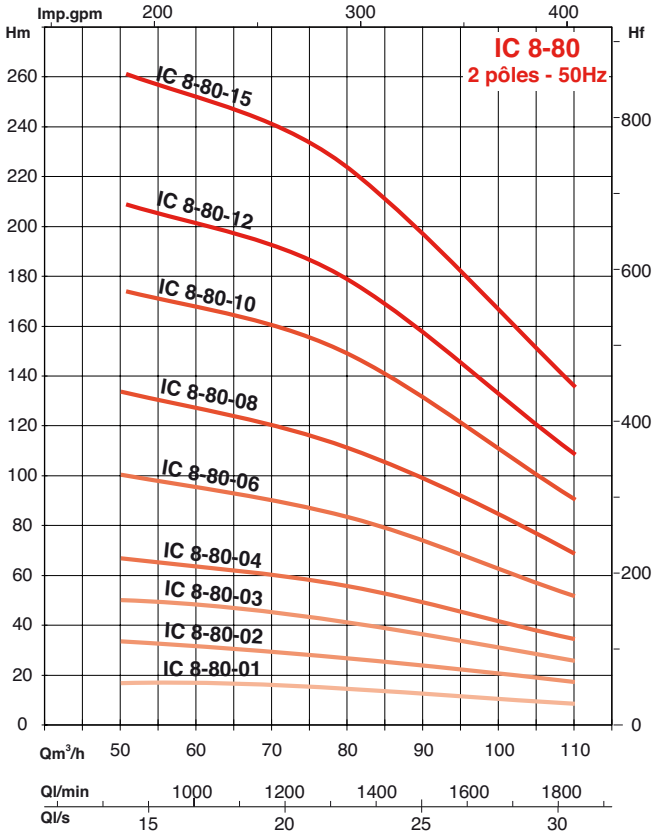

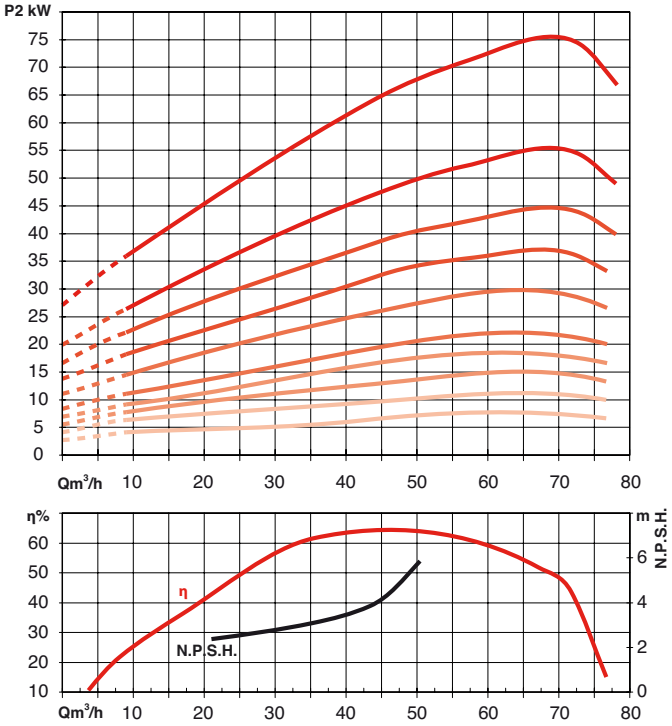

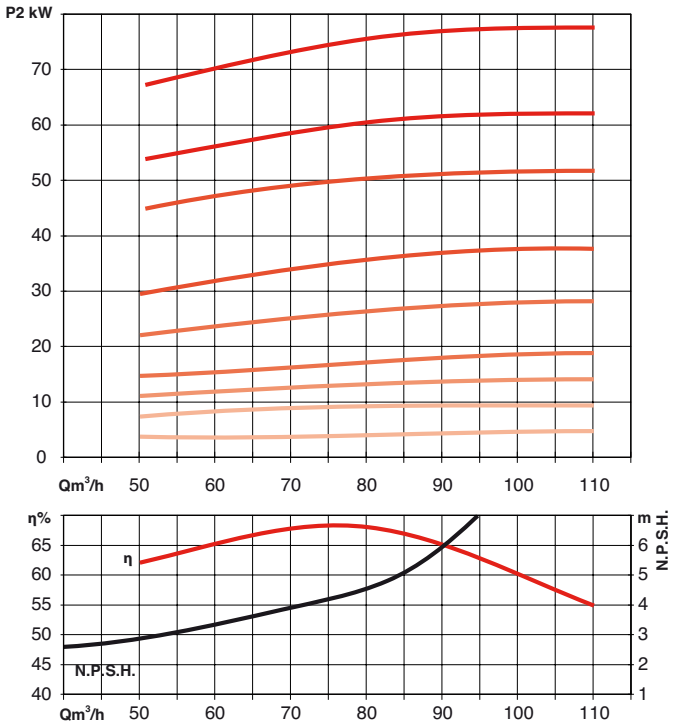

IC 8

HYDRAULIC PERFORMANCES

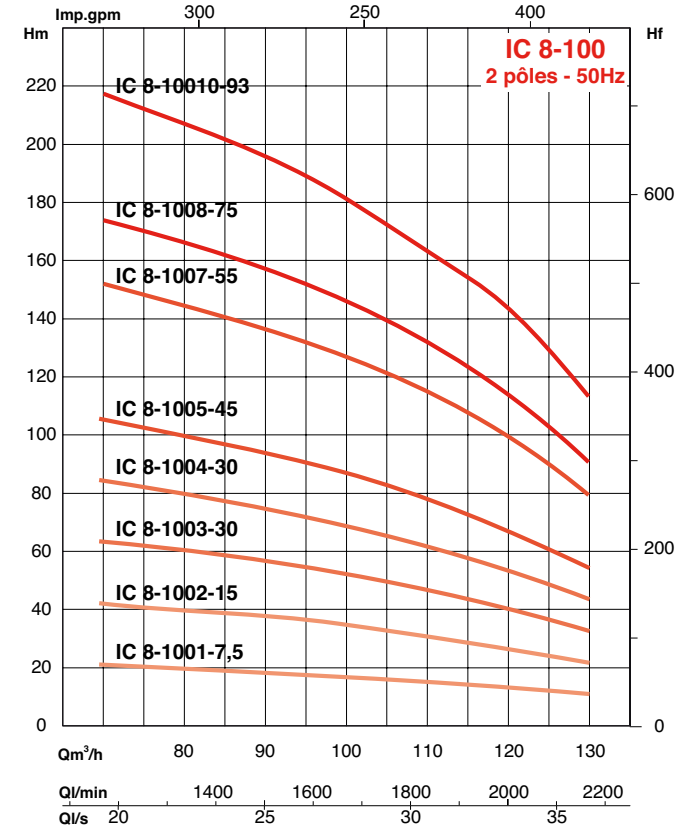

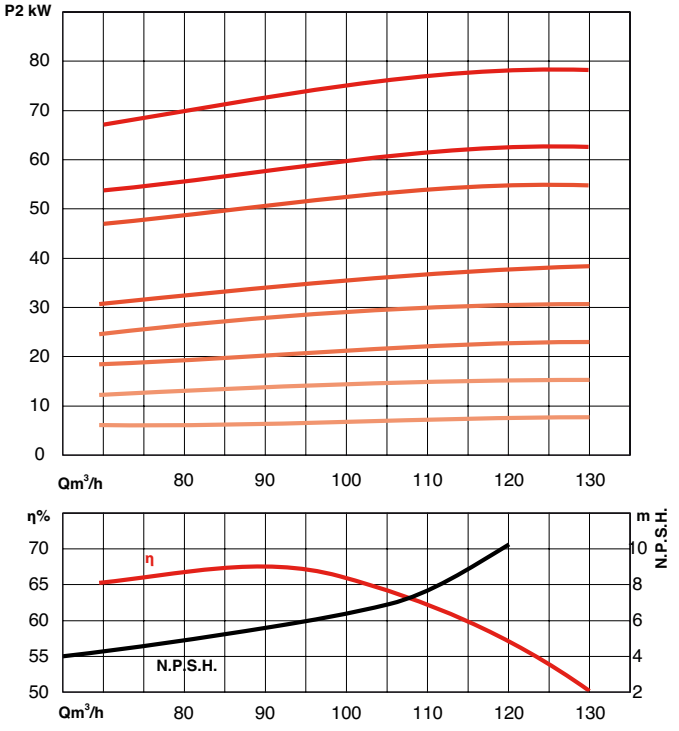

ELECTRICAL AND DIMENSIONAL SPECIFICATIONS

Reference	no. of impellers	Motor P2	Motor size	Cable Ø	Cable L	Current (3-400V)	DNR	Dimensions P	Dimensions H	Dimensions H1	Dimensions H2	Mass with pack.
		kW		mm2	m	A		mm	mm	mm	mm	kg
IC8-4202-B	02	7,5	6”	4 X 4	4	16,0	3”	190	1294	646	648	89,5
IC8-4203-B	03	11	6”	4 X 4	4	23,3	3”	190	1424	711	713	101,7
IC8-4204-B / IC8-4204-B-SD	04	15	6”	4 X 4	4	31,3	3”	190	1554	776	778	114
IC8-4205-B / IC8-4205-B-SD	05	18,5	6”	4 X 4	4	38,5	3”	190	1685	842	843	127,1
IC8-4206-B / IC8-4206-B-SD	06	22	6”	4 X 8,4	4	45,3	3”	190	1815	907	908	141,1
IC8-4208-B / IC8-4208-B-SD	08	30	6”	4 X 8,4	4	63,5	3”	190	2075	1037	1038	168,4
IC8-4210-B	10	37	6”	4 X 8,4	4	73,0	3”	190	2573	1405	1168	208,2
IC8-4212-B	12	45	6”	4 X 8,4	4	89,5	3”	190	2856	1558	1298	236,2
IC8-4214-B	14	55	8”	3 X 16	8	108,0	3”	190	2624,2	1204	1420,2	298,5
IC8-4219-B	19	75	8”	3 X 16	8	145,0	3”	190	3176,6	1395	1781,6	370,7
IC8-8001-B	01	5,5	6”	4 X 4	4	13,7	4”	190	1137,5	614	523,5	68,9
IC8-8002-B	02	11	6”	4 X 4	4	23,3	4”	190	1354,5	711	643,5	88,7
IC8-8003-B / IC8-8003-B-SD	03	15	6”	4 X 4	4	31,3	4”	190	1539,5	776	763,5	104,5
IC8-8004-B / IC8-8004-B-SD	04	22	6”	4 X 8,4	4	45,3	4”	190	1790,5	907	883,5	128,6
IC8-8006-B / IC8-8006-B-SD	06	30	6”	4 X 8,4	4	63,5	4”	190	2160,5	1037	1123,5	162,9
IC8-8008-B	08	45	6”	4 X 8,4	4	73,0	4”	190	2768,5	1405	1363,5	216,2
IC8-8010-B	10	55	8”	3 X 16	8	108,0	4”	190	2921,5	1558	1632,1	236,2
IC8-8012-B	12	75	8”	3 X 16	8	108,0	4”	190	3267,1	1204	1395	414,2
IC8-8015-B	15	93	8”	3 X 16	8	145,0	4”	190	3979,1	1747	2232,1	406,2
IC8-10001-B	01	9,3	6”	4 X 4	4	20,7	5”	190	1241	679	562	83,3
IC8-10002-B / IC8-10002-B-SD	02	18,5	6”	4 X 8,4	4	38,5	5”	190	1534	842	692	112,1
IC8-10003-B / IC8-10003-B-SD	03	30	6”	4 X 8,4	4	63,5	5”	190	1859	1037	822	143,9
IC8-10004-B / IC8-10004-B-SD	04	30	6”	4 X 8,4	4	63,5	5”	190	1989	1037	952	155,4
IC8-10005-B	05	45	6”	4 X 8,4	4	89,5	5”	190	2640	1558	1082	215,2
IC8-10007-B	07	55	8”	3 X 16	8	108,0	5”	190	2574,6	1204	1370,6	289,2
IC8-10008-B	08	75	8”	3 X 16	8	145,0	5”	190	2895,6	1395	1500,6	338,7
IC8-10010-B	10	93	8”	3 X 16	8	190,0	5”	190	3507,6	1747	1760,6	439,7

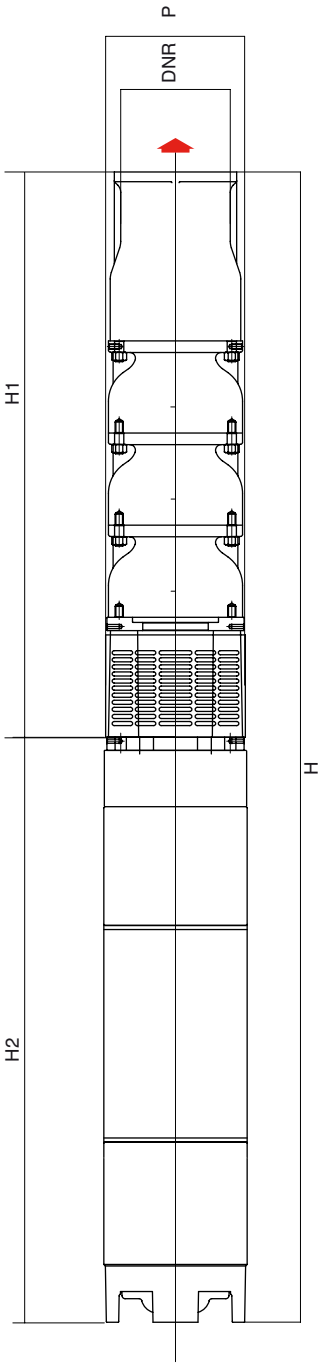

IC 8

INSTALLATION DIAGRAM FOR SKIRTS IN VERTICAL POSITION

• **1-jacket skirts**

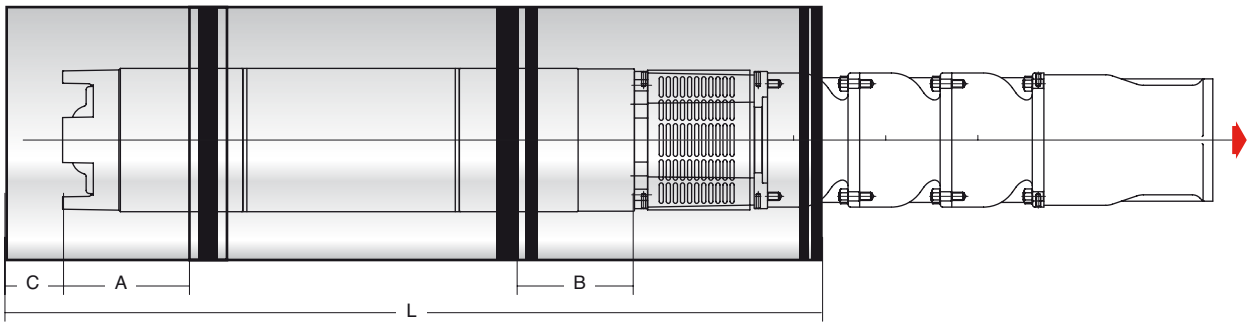

TYPE	Ø jacket	Ø Motor	Lg L	jacket n x l	spacer Ø x n	collars Ø x n	gasket	A	B	C	L/2	L/3	Weight Kg
IC8-4202-B			930					215	140	120	-	-	89,5
	220	134,5		1x1000	220/134,5 x 2	220 x 3							
IC8-4203-B	220	134,5	995	1x1000	220/134,5 x 2	220 x 3	8" 42	215	140	55	-	-	101,7
	220	134,5		1x1000	220/134,5 x 2	220 x 3							
IC8-4204-B			1060					215	140	0	-	-	114
IC8-4205-B	220	134,5	1126	2x750	220/134,5 x 3	220 x 4	8" 42	215	140	50	-	-	127,1
IC8-8001-B			854					215	140	196	-	-	68,9
	220	134,5		1x1000	220/134,5 x 2	220 x 3							
IC8-8002-B	220	134,5	961	1x1000	220/134,5 x 2	220 x 3	8" 80	215	140	89	-	-	88,7
	220	134,5		1x1000	220/134,5 x 2	220 x 3							
IC8-8003-B			1026					215	140	24	-	-	104,5
IC8-10001-B	220	134,5	957	1x1000	220/134,5 x 2	220 x 3	8" 100	215	140	93	-	-	83,3

CHARACTERISTICS OF COOLING SKIRTS

If the borehole diameter is too big in relation to the pump diameter, or for installation in a tank, the fluid speed will not be sufficient to cool the motor. A cooling skirt will then be necessary.
To check whether a skirt should be installed, refer to the technical data sheet: COOLING SKIRTS
Skirt made of AISI 316 100% stainless steel

For vertical installation:
- Motor cooling jacket(s)
- Spacers for centring the motor in the skirt
- Clamping collars for securing skirts and spacers
- Skirt end gasket to be positioned between the skirt and the hydraulics



For horizontal installations:
- Motor cooling jacket(s)
- Spacers for centring the motor in the skirt
- Clamping collars for securing skirts and spacers
- Skirt end gasket to be positioned between the skirt and the hydraulics
- Supports (motor and hydraulics) for stabilising the pump in the horizontal position

We offer vertical installation kits which are different from horizontal installation kits.
All of the accessories listed above are included in each of the kits.

INSTALLATION DIAGRAM FOR SKIRTS IN VERTICAL POSITION

• 2-jacket skirts

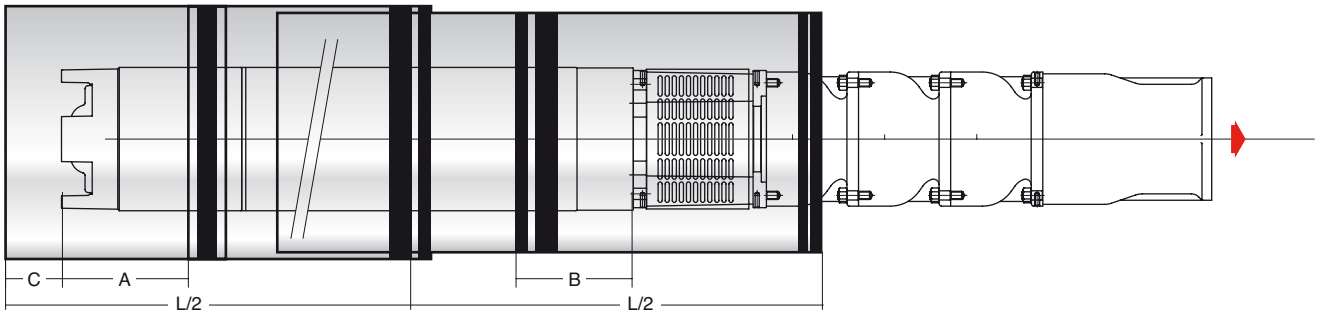

TYPE	Ø jacket	Ø Motor	Lg L	jacket n x l	spacer Ø x n	collars Ø x n	gasket	A	B	C	L/2	L/3	weight Kg
IC8-4205-B			1126					215	140	50	L/2	-	127,1
IC8-4206-B	220	134,5	1191	2x750	220/134,5x3	220x4		215	140	50	L/2	-	141,1
IC8-4208-B	220	134,5	1321	2x750	220/134,5x3	220x4		215	140	50	L/2	-	168,4
IC8-4210-B	220	134,5	1689	2x1000	220/134,5x3	220x4	8» 42	215	140	50	L/2	-	208,2
IC8-4212-B	220	134,5	1842	2x1000	220/134,5x3	220x4		215	140	50	L/2	-	236,2
IC8-4214-B	220	187	1516	1x750+1x1000	220/187x3	220x4	8» 42	260	190	50	L/2	-	300,2
IC8-4219-B	220	187	1705	2x1000	220/187x3	220x4	8» 42	260	190	50	L/2	-	370,7
IC8-8004-B	220	134,5	1157	2x750	220/134,5x3	220x4	8» 80	215	140	50	L/2	-	128,6
IC8-8006-B	220	134,5	1287	2x750	220/134,5x3	220x4		215	140	50	L/2	-	162,9
IC8-8008-B	220	134,5	1808	2x1000	220/134,5x3	220x4	8» 80	215	140	50	L/2	-	231,2
IC8-8010-B	220	187	1482	1x750+1x1000	220/187x3	220x4	8» 80	260	190	50	L/2	-	302,2
IC8-8012-B	220	187	1673	2x1000	220/187x3	220x4	8» 80	260	190	50	L/2	-	360,2
IC8-10002-B	220	134,5	1130	2x750	220/134,5x3	220x4		215	140	50	L/2	-	112,1
IC8-10003-B	220	134,5	1325	2x750	220/134,5x3	220x4	8» 100	215	140	50	L/2	-	143,9
IC8-10004-B	220	134,5	1325	2x750	220/134,5x3	220x4		215	140	50	L/2	-	155,4
IC8-10005-B	220	134,5	1846	2x1000	220/134,5x3	220x4	8» 100	215	140	50	L/2	-	215,2
IC8-10007-B	220	187	1518	1x750+1x1000	220/187x3	220x4	8» 100	260	190	50	L/2	-	289,2
IC8-10008-B	220	187	1705	2x1000	220/187x3	220x4	8» 100	260	190	50	L/2	-	338,7

INSTALLATION DIAGRAM FOR SKIRTS IN HORIZONTALE POSITION

• 3-jacket skirts

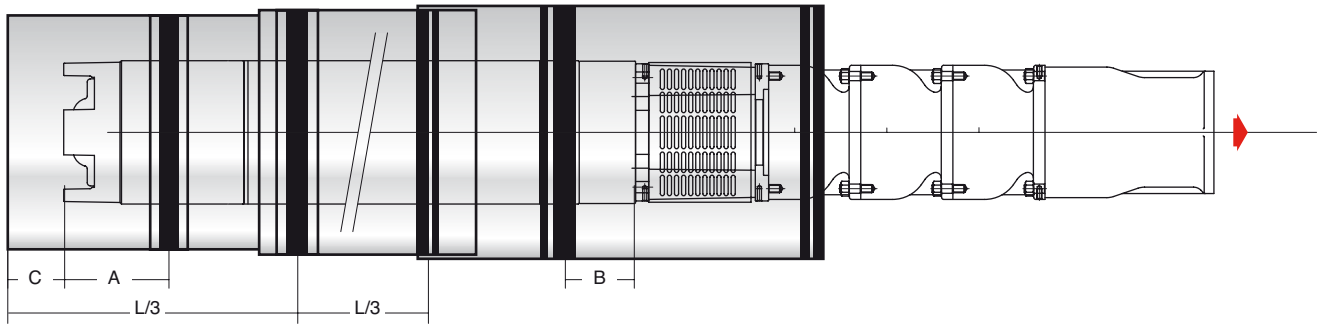

TYPE	Ø Skirt	Ø Motor	Lg L	Skirt n x l	Spacer Ø x n	Collars Ø x n	Gaskets	A	B	C	L/2	L/3	Weight Kg
IC8-8015-B	220	187	2025	2x750+1x1000	220/187x4	220x4	8“ 80	260	190	50	-	L/3	458,2
IC8-10010-B	220	187	2061	2x750+1x1000	220/187x4	220x5	8“ 100	260	190	50	-	L/3	439,7

IC 8

CABLES AND JUNCTIONS

Maximum cable length (in m) according to motor capacity and cable cross-section (400 V three-phase supply)

In	P2	Cable cross-section in mm2																
A	kW	4x1.5	4x2.5	4x4	4x6	4x10	4x16	4x25	4x35	4x50	4x70	4x95	4x120	4x150	4x185	4x240	4x300	4x400
5.9	2.2	120	199	317	472	775	—	—	—	—	—	—	—	—	—	—	—	—
7.8	3	90	154	245	364	598	—	—	—	—	—	—	—	—	—	—	—	—
10	4	69	114	182	271	444	685	—	—	—	—	—	—	—	—	—	—	—
13.7	5.5	50	83	130	197	324	509	—	—	—	—	—	—	—	—	—	—	—
16	7.5	40	66	105	156	257	404	616	—	—	—	—	—	—	—	—	—	—
23.3	11	—	45	72	107	176	278	423	577	—	—	—	—	—	—	—	—	—
31.3	15	—	—	—	80	132	208	317	452	595	—	—	—	—	—	—	—	—
38.5	18.5	—	—	—	65	107	168	256	348	481	645	—	—	—	—	—	—	—
45.3	22	—	—	—	—	90	142	215	295	407	545	704	—	—	—	—	—	—
61.8	30	—	—	—	—	—	108	164	223	306	408	522	622	—	—	—	—	—
73	37	—	—	—	—	—	86	131	179	248	335	434	524	623	—	—	—	—
89.5	45	—	—	—	—	—	—	112	152	209	279	358	426	502	580	—	—	—
108	55	—	—	—	—	—	—	—	124	170	228	293	351	414	481	571	—	—
144	75	—	—	—	—	—	—	—	—	129	173	223	267	316	367	437	500	583
187	93	—	—	—	—	—	—	—	—	—	134	172	205	241	279	330	375	433
220	110	—	—	—	—	—	—	—	—	—	—	145	174	205	237	281	320	370
248	132	—	—	—	—	—	—	—	—	—	—	—	150	175	195	235	285	330

CABLES AND JUNCTIONS

Heat-shrinkable junctions

Name	Cross-section	Order ref.
junction 0	4x1,5 / 4x2,5	4029677
junction 1	4x4 / 4x6	4059212
junction 2	4x10 / 4x16	4029678
junction 3	4x25 / 4x35	18294

Junction boxes (mm)

Name	Cross-section	Order ref.
Junction box 1	4x1,5 a 4x2,5	4065698
Junction box 2	4x4 a 4x10	4065699
Junction box 3	4x16 a 4x35	4065700
Junction box 4	4x50 a 4x70	4065701
Junction box 15	4x95 a 4x150	4065702
Junction box 16	4x185	4065703
* Contact us for price.		

Power cable (sold per metre)

Cross-section mm2	cable round type	Order ref.
4 x 1.5	•	018156
4 x 2.5	•	018157
4 x 4	•	018158
4 x 6	•	018159
4 x 10	•	018160
4 x 16	•	018161
Contact us about larger sizes.		

Options

Level-sensing electrode and power cable	
CABLELEC 1 X 1.5 mm2	064904
ELECTRODE	064873

SPECIFICITIES

a) Electrical

- All types in three-phase.
- Connection to mains power via the flat cable on the motor by heat-shrinkable junctions (1.5 to 25 mm2) or by junction boxes (all cross-sections) and 4-conductor flat cables.

ATTENTION

Make sure that the borehole diameter can accommodate the discharge piping and the junction box.

Provide a control and low-water protection box or cabinet with level-sensing electrodes or a float switch.

b) Installation

- Vertically (horizontal position also possible).
- Connection to discharge by threaded steel piping - Ø 2" to 6" depending on model of pump.

NB

For deep wells (of larger diameter than a borehole) it is recommended to equip the pump with a cooling skirt.

c) Packaging

- Pump delivered in a wooden crate with power cable (for direct starting versions only):
  - 4" motor: length 2 m - 4 x 1.5 mm^2.
  - 6" motor: length 4 m - 4 x 4 mm^2 jmm2 up to 22kW, 4 x 8.3 mm2 for above.
  - 8" motor: length 8 m - 4x8.4mm^2, for 55-93kW and 3x35mm^2 for 110-150kW.

d) Maintenance

- Repair of hydraulic part and motor.

ACCESSORIES

- Control and low-water protection box or cabinet.
- Level-sensing electrodes.
- Electric cable.
- Heat-shrinkable junctions.
- Cooling skirt (see table).
- Non-return valves.
- Shut-off valves.
- Bladder (or galvanised) tanks).
- Stainless steel cooling skirts, see technical data sheet: COOLING SKIRTS
- Pressure gauge, etc.

RANGE OF USE

Flow rate up to:	**16 m³/h**
Manometric head up to:	**60 m**
Max. temperature of water:	**+55°C**
Max. operating pressure:	**10 bars**
Max. ambient temperature:	**+40°C**
Nominal diam. of threaded manifolds:	**G2"**

ALTI-HU

BOOSTER UNITS FITTED WITH TWO HORIZONTAL MULTI-STAGE PUMPS

For homes and small institutions
2 poles - 50 Hz

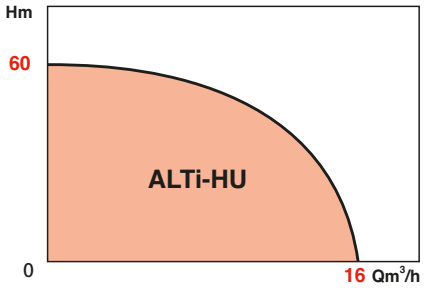

APPLICATIONS

Booster pump, preassembled and factory-adjusted, composed of two horizontal multi-stage pumps "MUHs" for pumping clean water in drinking water supply systems:

- small housing projects;
- private homes;
- watering;
- schools;
- sports facilities;
- shops.

ADVANTAGES

- **Compact module, preassembled and factory wired.**
- **Operates with pressure switch.**
- **Smaller footprint.**
- **Easy to install.**
- **Electrical cabinet for control and protection of pumps, operating in cascade and alternately.**
- **Silent running.**
- **BC Control box with adjustable delay to reduce the capacity of tanks.**

Certified ACS



ALTI-HU

DESIGN

The booster pump is supplied preassembled, wired, factory-adjusted and ready to install.
Monobloc booster pumps fitted with:
- 2 "MUH" series horizontal multi-stage pumps in cast iron and stainless steel
- 2 pressure switches
- 2 non-return valves on the output
- 2 locking valves on output and intake
- 2 threaded manifolds on output and intake
- 1 electrical cabinet for control and protection, BC type
- 1 manometer
- 1 frame

BASIC CONSTRUCTION

Main parts	Material
Pumps (x 2)	MUH 300 or 500 T (see technical instructions)
Pipes	Electro-galvanised steel
Valves	Brass
Frame	Galvanised steel
Control box	Plastic

IDENTIFICATION

ALTI-HU-304-2-BC-M

Alti-HU : Standard Version with pumps MUH

Nominal flow rate:
3 M³/h : pump MUH 3xx
5 M³/h : pump MUH 5xx

Number of impellers

Operating mode of the module:
2 pumps in cascade

Supply voltage:
M : single-phase motor
T : three-phase motor

BC CONTROL BOX – OPERATING PRINCIPLE



When water is required, the pressure in the system is reduced. This fall in pressure is detected by one of the pressure switches (previously set to the cut-in point) This starts the pump, which begins pumping until the set pressure is reached.

If the pressure again falls below the level of the second pressure switch setting, the second pump starts up.

Once the cut-in pressure is reached the pumps stop after a set period of time.

At the following startup, the pumps reverse order; this optimises their operating time.

If there is no water (detected by a float switch or a pressure switch) the BC box automatically switches off the pumps and then automatically starts them again once the water is restored. The low water sensor (a float switch or pressure switch) needs to be ordered separately.

LED indicators on the control box:
- low water alarm indicator
- booster pump power on
- pump 1 on
- pump 2 on
- fault on pump 1
- fault on pump 2

Switch to select operating modes for each pump: (automatic/off/ manual)

STANDARDS AND SPECIFICATIONS

- Complies with European directives for CE marking:
- Machines Directive 2006/42/CE and Low voltage Directive 2006/95/CE
- Electromagnetic Compatibility Directive (CEM) 2004/108/CE

And the harmonised European standards (hEN) related to each:
EN ISO 12100, EN 60204-1, EN 61000-6-1, EN 61000-6-2, EN 61000-6-3, EN 61000-6-4

- Certified for use with drinking water: Health compliance certificate (ACS)
- Compliance of pumps:
- For the output of three-phase electric motors, the pumps meet the ErP eco-design directive (rule 640/2009/CE as amended).

THEORETICAL DIAGRAM

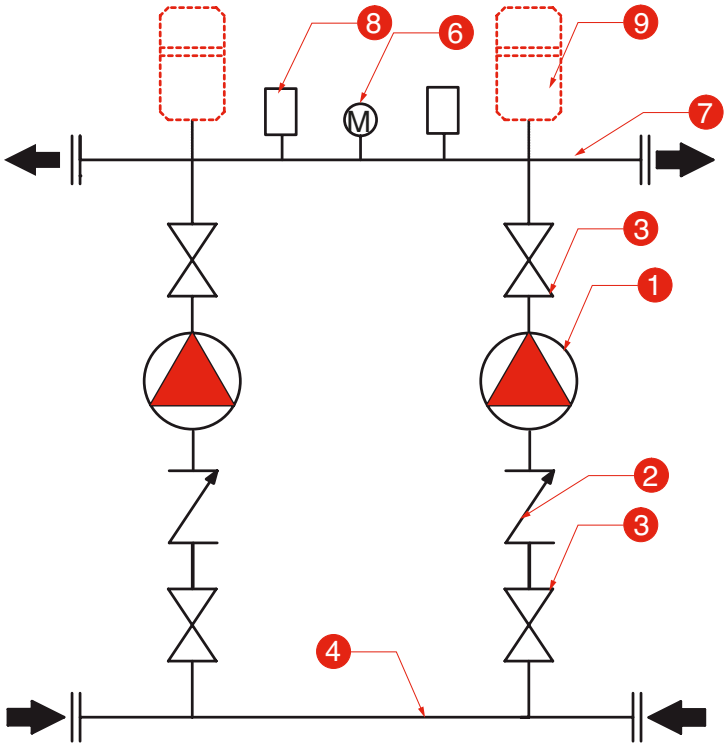

1) MUH Pump (T4 230/400 V)
2) Non-return valve
3) Ball shut-off valves on output and intake
4) Intake pipe
6) Manometer
7) Output pipe
8) Pressure switch
9) Optional part recommended: membrane tank (8 litres minimum)

DESCRIPTION OF THE BOOSTER PUMP

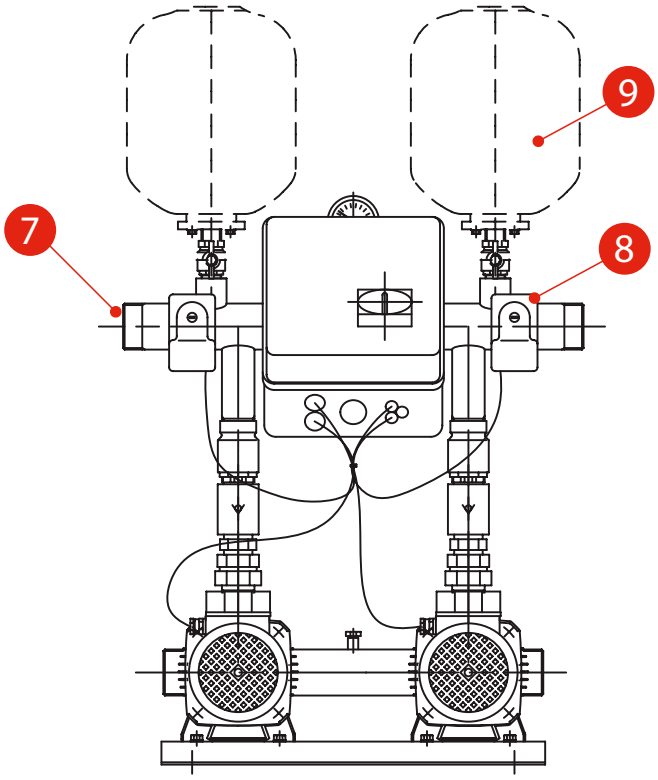

1) MUH Pump (T4 230/400 V)
2) Non-return valve
3) Shut-off valve
4) Intake pipe
5) BC Control box
6) Manometer
7) Output pipe
8) Pressure switch
9) Bladder tanks as option

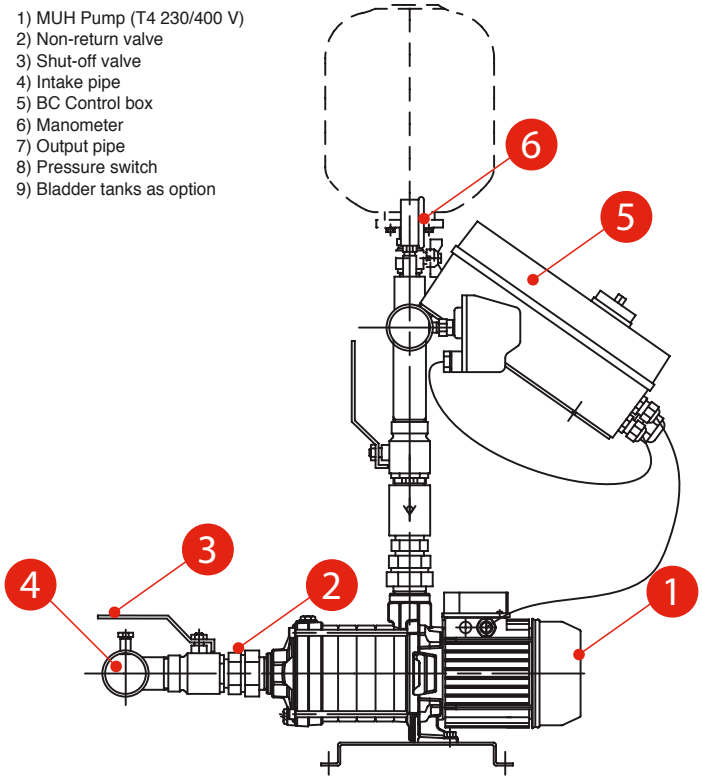

ALTI-HU

HYDRAULIC PERFORMANCE - 2 900 RPM - 50 HZ

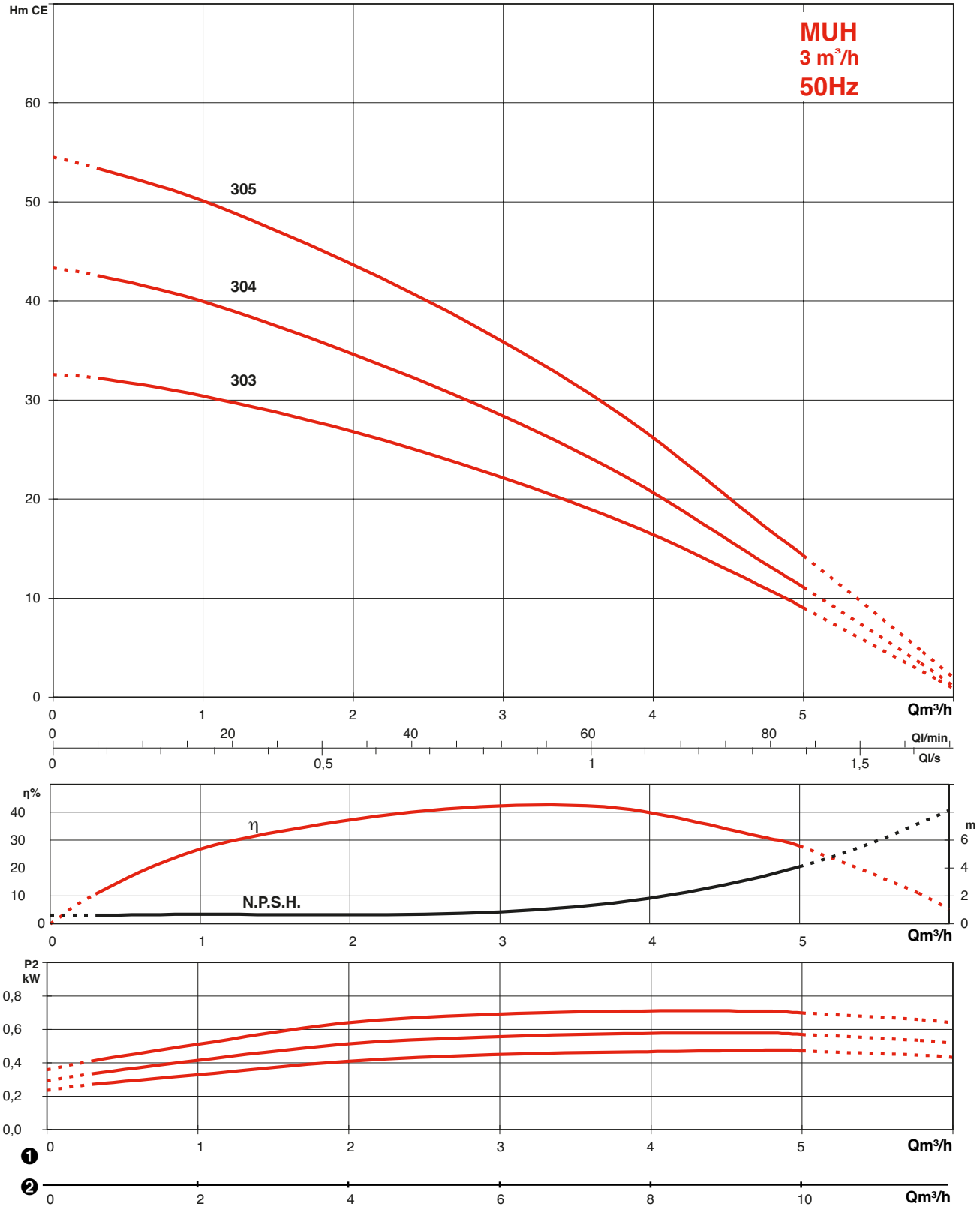

HYDRAULIC PERFORMANCE - 2 900 RPM - 50 HZ

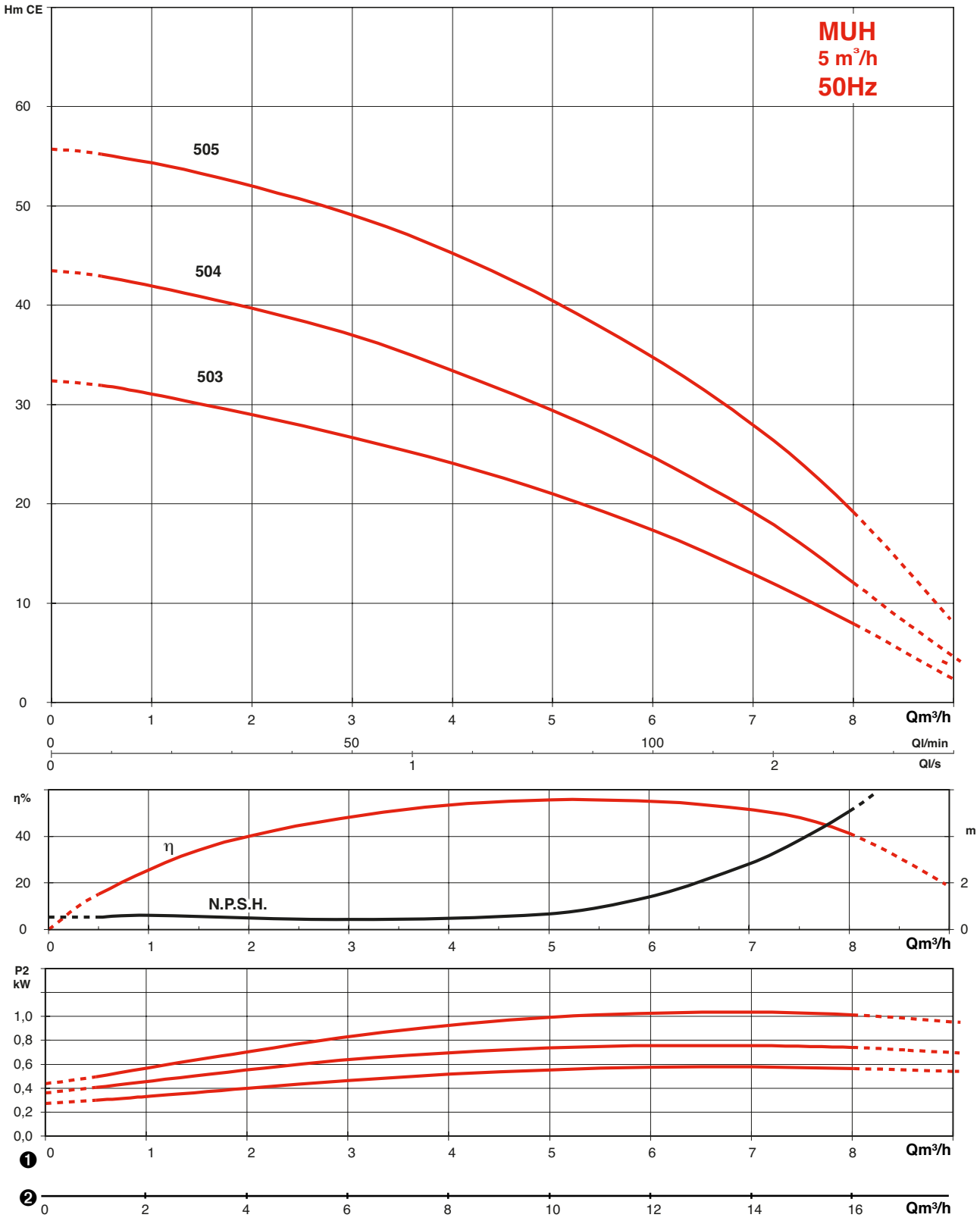

ALTI-HU

ELECTRICAL AND DIMENSIONAL CHARACTERISTICS

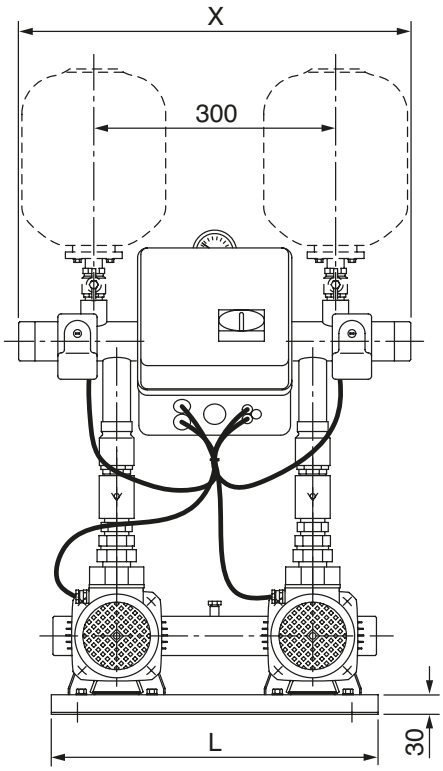

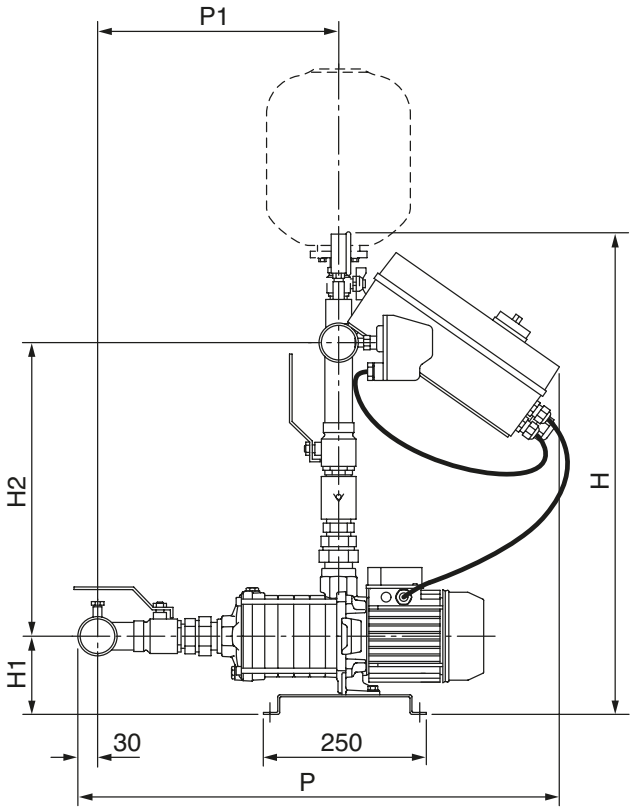

Type	Voltage	A	Frequency	Power P2	Pipe	H	L	P	H1	H2	P1	X	Mass net
	~	V	Hz	kW		mm	mm	mm	mm	mm	mm	mm	Kg
ALTI-HU-303-2-BC-M	1	230	50	2x0,55	2"	740	500	661	120	420	292	595	47,9
ALTI-HU-304-2-BC-M	1	230	50	2x0,55	2"	740	500	686	120	420	316	595	49,9
ALTI-HU-305-2-BC-M	1	230	50	2x0,75	2"	740	500	710	120	420	340	595	57,9
ALTI-HU-503-2-BC-M	1	230	50	2x0,55	2"	770	500	661	120	450	292	595	47,9
ALTI-HU-504-2-BC-M	1	230	50	2x0,75	2"	770	500	686	120	450	316	595	59,9
ALTI-HU-505-2-BC-M	1	230	50	2x1,1	2"	770	500	710	120	450	340	595	58,3
ALTI-HU-304-2-BC-T	3	400	50	2x0,55	2"	740	500	716	120	420	346	595	49,9
ALTI-HU-305-2-BC-T	3	400	50	2x0,55	2"	740	500	740	120	420	370	595	60,5
ALTI-HU-503-2-BC-T	3	400	50	2x0,55	2"	770	500	691	120	450	322	595	47,9
ALTI-HU-504-2-BC-T	3	400	50	2x0,75	2"	770	500	716	120	450	346	595	59,9
ALTI-HU-505-2-BC-T	3	400	50	2x1,1	2"	770	500	740	120	450	370	595	60,7

FEATURES

a) Electrical
- Frequency 50 Hz

b) Packaging
- On wood frame with protection

c) Options and accessories
- Bladder thank (8 litres min.)
- Float switch or pressure swicht for dry-running protection.

ALTI-AQUA

TWO-PUMP BOOSTER UNIT SILENT AND COMPACT

Homes - small institutions 2 poles - 50 Hz

RANGE OF USE

Flow rates up to:	**14 m³/h**
Manometric head up to:	**68 m**
Maximum temperature of the water:	**+40°C**
Maximum operating pressure:	**10 bar**
Min. max. suction Pression (AL version) :	**0,1 to 4 bar**
DN collecteurs :	**2"**

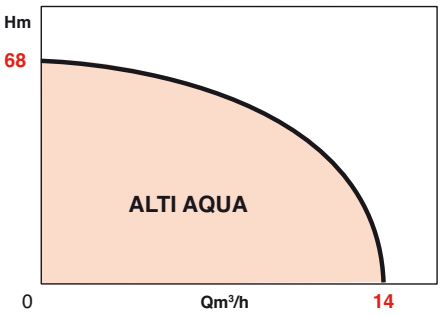

APPLICATIONS

Boosting and supplying water for domestic installations and small institutions:

- Small groups of houses,
- Blocks of up to 40 flats,
- private residences,
- shops,
- schools.

ADVANTAGES

- **Silent running: from of 51 dB(A) for a single pump.**
- **Compact solution: saves about 40% of the space of a traditional horizontal booster pump**
- **"Premium" but competitive design.**
- **Pumps all stainless steel 304.**



ALTI-AQUA

DESIGN

Booster unit of 2 very quiet and particularly compact pumps, fitted with:
- 2 Aquason pumps.
- 2 pipes in stainless steel 304, connection left or right.
- Valves on intake and on output of each pump.
- Interchangeable non-return valve, on output of each pump.
- 1 control box, type BC.
- Two pressure switches mounted and connected to the box.
- Two Rp1» connections for bladder tanks (not provided).
- One Rp¼» connection on intake pipe for protection against running dry.

Speed:	2850 rpm[1]
Single-phase winding:	230V
Three-phase winding:	400 V
Frequency:	50 Hz
Insulation:	155 (F)
Protection class, pump:	IP68
Protection class, box (1~) :	IP54

BASIC CONSTRUCTION

Main parts	Material
Pumps (x 2)	AQUASON (see separate documents)
Pipes	Stainless steel 304
Valves	laiton+PTFE (ACS)
Non-return valve	laiton+NBR+POM
Mechanical seal on hydraulics side	Carbon / Ceramic
Mechanical seal on motor side	Silicon carbide/ silicon carbide

STANDARDS AND SPECIFICATIONS

- Electrical environment: CEI 60364-1.
- Hydraulic environment: EN 806.
- Systems:
- Machine Directive 2006/42/EC: EN12100-2 and EN14121-1
- Electromagnetic Compatibility Directive 2004/108/EC: EN 61000-6-1, EN 61000-6-2, EN 61000-6-3, EN 61000-6-4
- ROHS and REACH Directive
- Pumps:
- Machine Directive 2006/42/EC: EN 809 (version 3~) and EN 14121-1
- Low voltage Directive 2006/95/EC: EN 60204-1 (EN60034-1) and EN60335-2-41(version 1~)
- Certified ACS (07 ACC LY 006)
- Control box:
- Low voltage Directive 2006/95/EC: EN 60439-1
- Electromagnetic Compatibility Directive 2004/108/EC: EN 61000-6-1, EN 61000-6-2, EN 61000-6-3, EN 61000-6-4

OPERATING LIMITS

Maximum operating pressure:	**10 bar**
Temperature of liquid:	**de +3°C à +40 °C**
Maximum ambient temperature:	**+40°C**
Maximum number of start-ups:	**15/h**
Humidity:	**90% (à +40°C)**
Electricity supply:	
Frequency	**50 Hz**
Voltage	**1~230V (-M) ou 3~400V (-T)**
Maximum variation of voltage	**±10 %**
Type of liquid:	**Clean water, drinking wat er without particles**

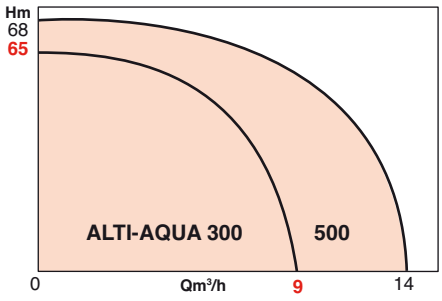

IDENTIFICATION

ALTi-AQUA-304-2-BC-M

- Range of booster pump
- AQUASON Type pump
- Model of pump
- Nominal flow rate: 3 m³/h
- Number of stages: 4
- Number of pumps: 2
- Type of box
- T : Three-phase 3~400V
- M : Monophase 1~230V

DESCRIPTION OF THE BOOSTER UNIT

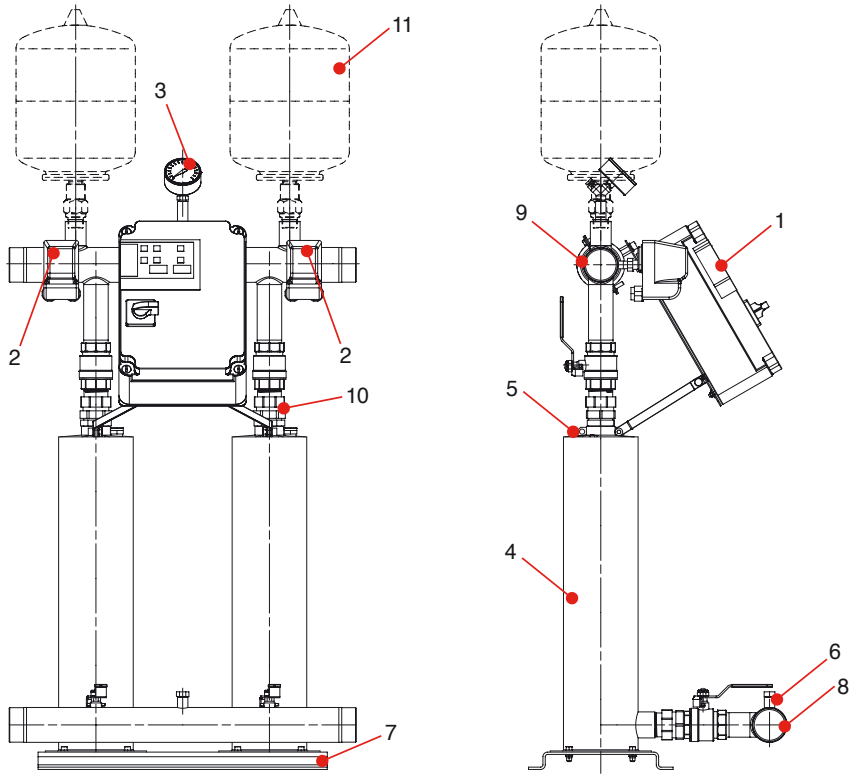

1 Control box
2 Pressure switches
3 Manometer
4 Aquason type pumps
5 Filler plug
6 Tap for protection against running dry
7 Support and fixing frame
8 Intake pipe
9 Output pipe
10 Non-return valve
11 Bladder tanks (not provided)

ELECTRONIC BC CONTROL BOX

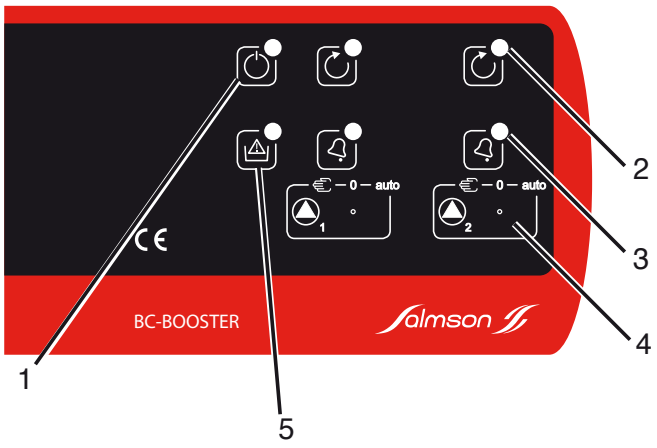

1 Current indicator
2 'On' indicator for each pump
3 'Fault' indicator for each pump
4 Three-function switch for each pump: AUTO – OFF – MANUAL
5 Running dry Indicator
6 General isolating switch

OPERATION

The pumps are operated in cascade by two simple pressure switches. When the first pump to be run stops at the end of a cycle, the start-up cycle switches over to the second pump. A tank needs to be used to avoid rapid hunting between the pressure switches controlling the pumps.
The volume of the tank chosen determines the operating time of the pumps. After the pumps are switched off by the dry-running detector, they cannot restart until the water is restored upstream.
The automatic system ensures the motors are protected against over-heating and short-circuits.

TECHNICAL DATA

- Protection class IP54
- Operating modes AUTO – 0FF – MANUAL
- Power supply 1~230V or 3~400V ±10%, 50hz
- Primary and secondary fuses
- Protection against running dry (no included): by pressure switch or float switch (NO contact)
- The switchover module may be by-passed

ALTI-AQUA

HYDRAULIC PERFORMANCE - SERIE 300

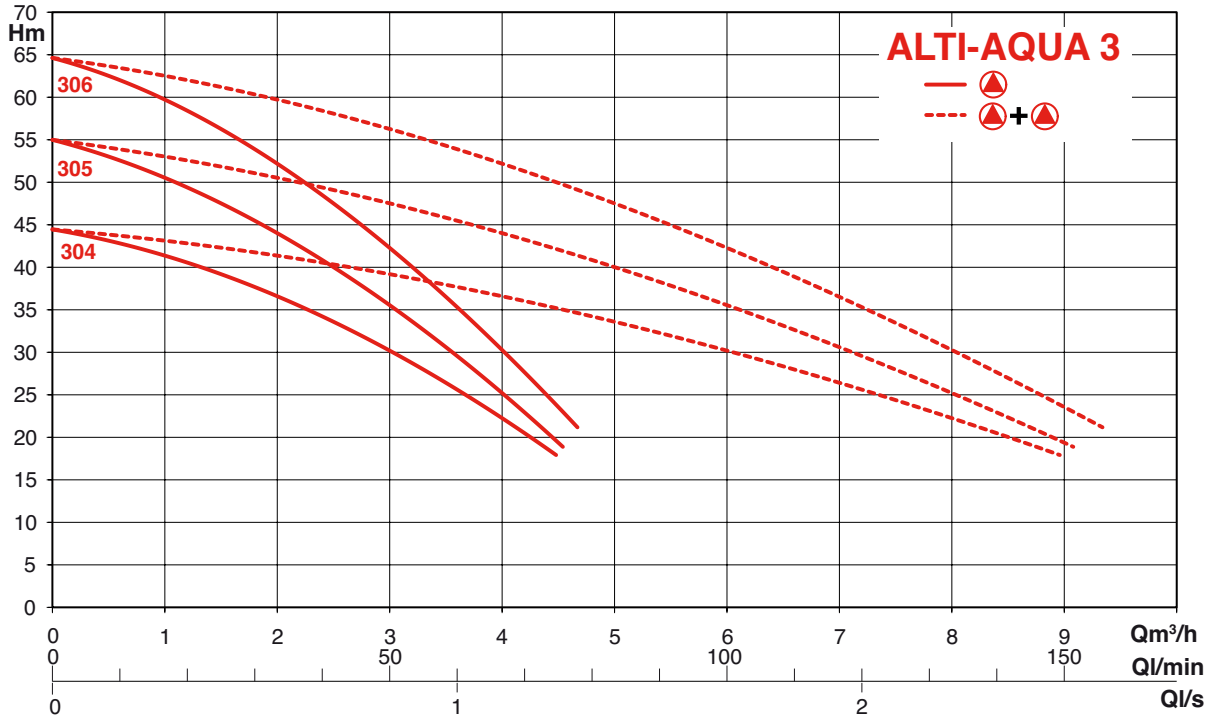

HYDRAULIC PERFORMANCE - SERIE 500

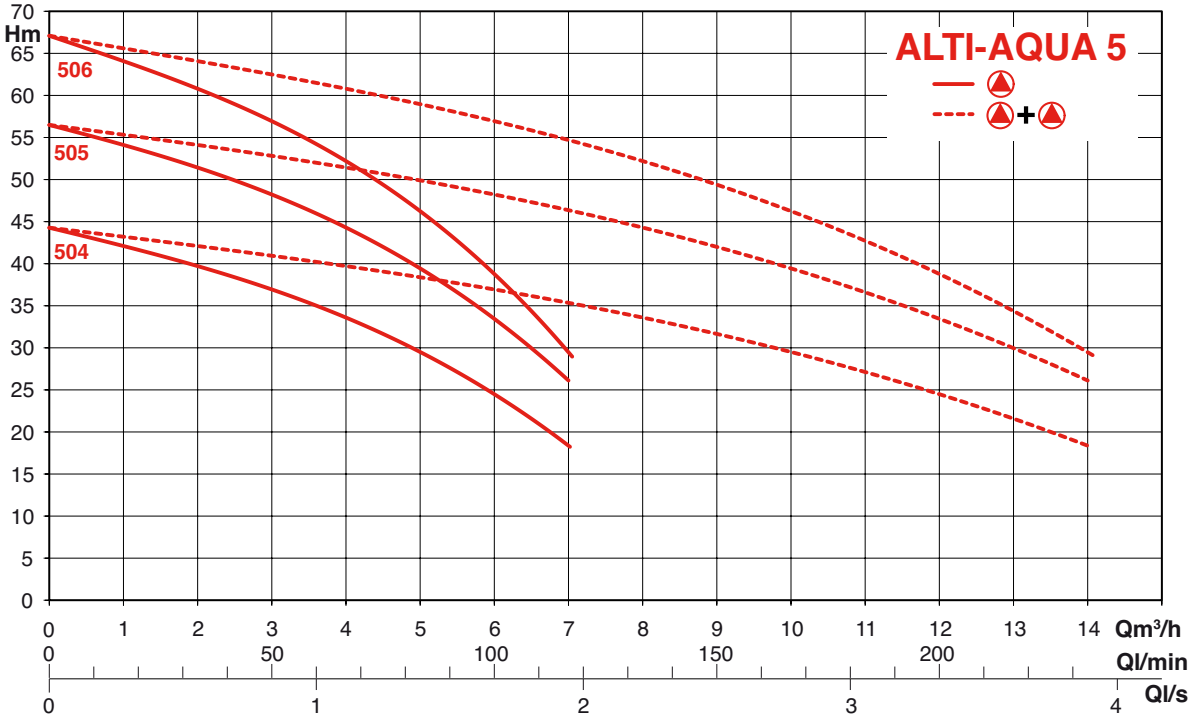

DIMENSIONAL CHARACTERISTICS

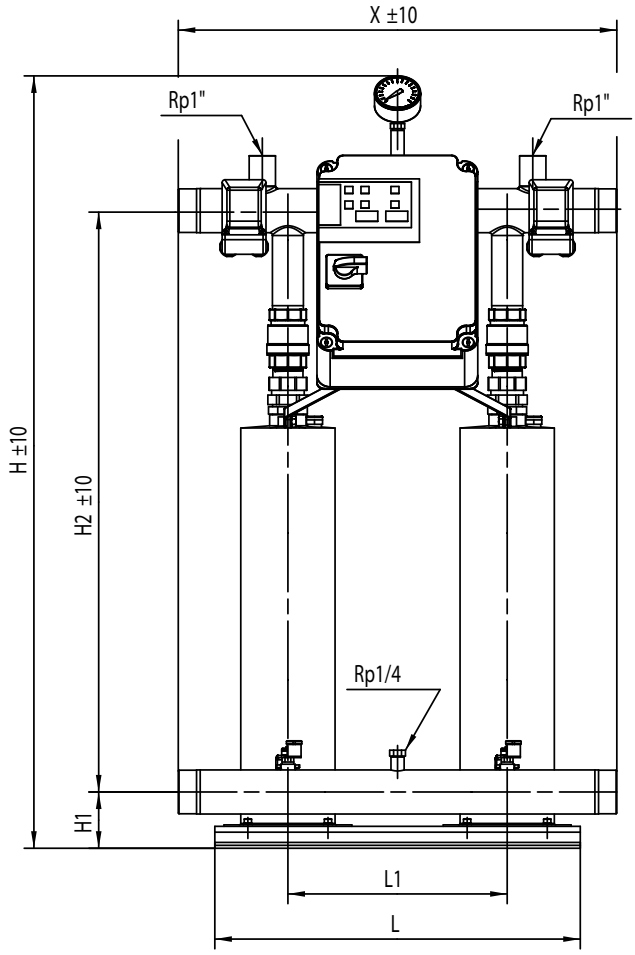

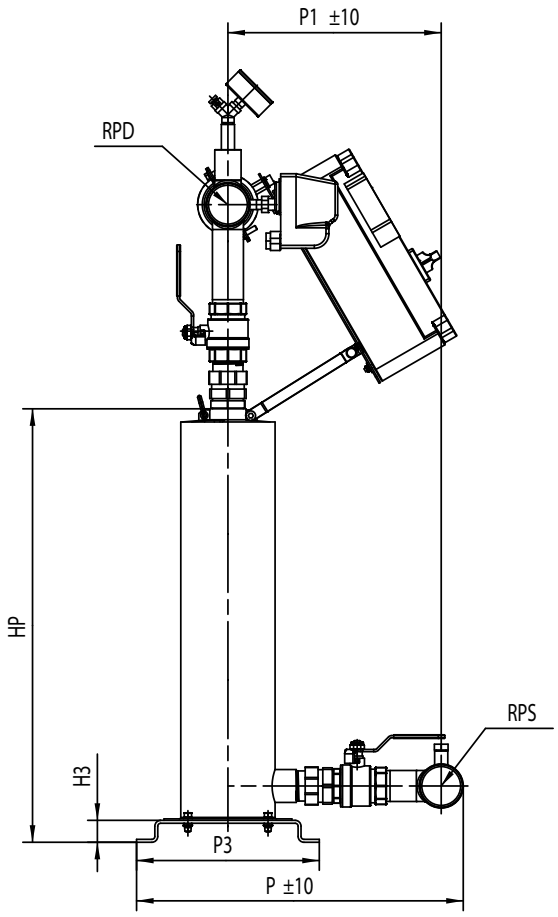

Reference	H	H1	H2	H3	HP	L	L1	P	P1	P3	X	RPD / RPS
	mm	mm	mm	mm	mm	mm	mm	mm	mm	mm	mm	
ALTi-AQUA-304-2-BC-M/T	1032	77	771	30	569	500	300	447	292	250	600	2"
ALTi-AQUA-305-2-BC-M/T	1032	77	771	30	569	500	300	447	292	250	600	2"
ALTi-AQUA-306-2-BC-M/T	1057	77	795	30	593	500	300	447	292	250	600	2"
ALTi-AQUA-504-2-BC-M/T	1057	77	795	30	593	500	300	447	292	250	600	2"
ALTi-AQUA-505-2-BC-M/T	1081	77	819	30	617	500	300	447	292	250	600	2"
ALTi-AQUA-506-2-BC-M/T	1081	77	819	30	617	500	300	447	292	250	600	2"

ALTI-AQUA

ELECTRICAL CHARACTERISTICS AT 2850 RPM

Pumps reference	H max.*	Q nom.*	P1*	P2*	A*	µF/V	Weight
	m.	m³/h	kW	kW			
			1~230 V				
ALTi-AQUA-304-2-BC-M	45	3,4	0,85	0,55	4,5	20/450	50
ALTi-AQUA-305-2-BC-M	55	3,4	1	0,75	4,9	20/450	51
ALTi-AQUA-306-2-BC-M	65	3,4	1,2	0,75	5,6	20/450	52
ALTi-AQUA-504-2-BC-M	45	5,3	1,15	0,75	5,2	20/450	53
ALTi-AQUA-505-2-BC-M	67	5,3	1,4	0,9	6,5	30/450	54
ALTi-AQUA-506-2-BC-M	68	5,3	1,7	1,1	7,9	30/450	55
			3~400 V				
ALTi-AQUA-304-2-BC-T	45	3,4	0,85	0,55	1,9	-	49
ALTi-AQUA-305-2-BC-T	55	3,4	1	0,75	2,1	-	50
ALTi-AQUA-306-2-BC-T	65	3,4	1,2	0,75	2,3	-	51
ALTi-AQUA-504-2-BC-T	45	5,3	1,15	0,75	2,2	-	52
ALTi-AQUA-505-2-BC-T	67	5,3	1,4	0,9	2,5	-	53
ALTi-AQUA-506-2-BC-T	68	5,3	1,65	1,1	2,8	-	54

* values for 1 pump

EQUIPMENT

A complete system on pallet under plastic wrap, factory wired, with instructions for installing the pump, the box and the system.

RECOMMENDED ACCESSORIES

a) Essential accessories

- Bladder tank (1 or 2 pieces, Rp1», PN10).
- Protection against mains or reservoir running dry.

• Bladder tank



• Dry running protection kit



b) optional accessories

- Shut-off valves.
- Anti-vibration sleeves.
- Pressure reducing valve.
- Back flanges for the diameter of the pipe.

• Shut-off valve



• Anti-vibration sleeve



OPERATING LIMITS

Flow rates up to:	**320 m³/h**
Delivery head up to:	**240 m CE***
Maximum operating pressure:	**16 bar**
	option 25 bar*
Maximum water temperature:	**70°C**
Ambient temperature:	**40°C**
DN threaded manifold:	**DN 1½" to 3"**
DN flange manifold:	**DN 100 to 200**

* on demand

ALTI-NEXIS V

HIGH-EFFICIENCY PRESSURE BOOSTERS

Series of pressure boosters fitted with multi-stage stainless steel NEXIS V pumps: Collective and industrial use 2 poles - 50 Hz

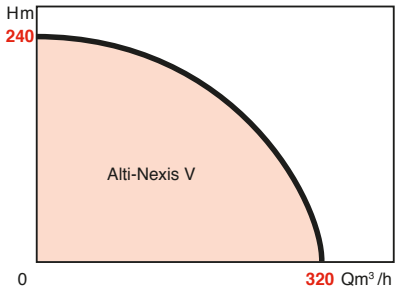

APPLICATIONS

Pressurising and maintaining pressure in water distribution systems with insufficient or non-existent pressure, for:
- housing blocks, offices,
- private residences,
- hotels, hospitals,
- shopping centres, shops,
- schools, colleges, universities, barracks,
- industrial and agricultural buildings,
- irrigation, watering, etc…

ADVANTAGES

- **Compact modules, preset at the factory and ready to be installed.**
- **Reduced footprint.**
- **Easy installation: two hydraulic connections and one electrical connection.**
- **Controls and protection brought together in the switch board.**
- **Complete system with maximum efficiency (high hydraulic efficiency, controls, IE2 motor) in order to obtain a highly energy-efficient performance overall.**
- **Hydraulics section in stainless steel with stainless steel pipes: protection against corrosion and longer life.**
- **Booster pump certified for use with drinking water: Certificate of Sanitary Conformity (ACS).**
- **Booster unit available as standard for up to 4 pumps.**

• ALTi-NEXIS-V608-3-SC



• ALTi-NEXIS-V604-2-CC



• ALTi-NEXIS-V604-2-CE+



ALTI-NEXIS V

DESIGN

• ALTi-Nexis V Range

Compact booster pumps, designed for direct or standard boosting systems, fitted with:

- 2 to 4 Nexis V pumps, with pre-set hydraulic features.
- Nexis V pump 22 to V52 with front access to the mechanical seal with standard cartridge for easier maintenance.
- Nexis pump V4 to V16 without cartridge as standard on booster pumps fitted with switch boxes CE+, SC, SCFC.
- Nexis pump V4 to V16 with standard cartridge on booster pumps fitted with CC and CCFC switch boxes (contact us for further details).
- Valves at the outlet and the intake on each pump.
- Quiet-running non-return valve at the outlet of each pump (fitted with interchangeable cartridges on the ALTi Nexis-V range up to 16m³/h).
- A pressure transmitter to control the pumps.
- A low water level pressure switch (compulsory accessory – mains water supply version).
- A low water level float switch (compulsory accessory – storage tank version).
- Pressure gauge on the outlet.
- A supporting frame mounted on adjustable vibration-absorbing feet.
- Lifting rings on the pump and on the frame (screw-in rings on booster pumps fitted with CE, CC or CCFC logic controller systems; built-in rings on the SC and SCFC).
- Switch box available with three settings and control display:
  CE+ : simplified electronics unit
  SC : advanced electronics unit
  SCFC : SC unit with a frequency converter in the switch board
  CC : PLC (Programmable logic controller)
  CCFC : PLC + a frequency converter in the switch board

Available on request
(contact us for further details) :

- ELiNOX version: 316 grade stainless steel version.
- Booster pumps for five pumps or more, jockey pumps.

IDENTIFICATION

ALTI-NEXIS - V 2205/2/K - 2 CC - 16 - T4 - FC

Version
Alti-NEXIS: Standard version.

Type of pump :
V: Standard vertical pump.

Nominal flow and number of adjustable speeds for each pump / number of trimmed impellers / cartridges
4 m³/h : NEXIS-V pump
6 m³/h : NEXIS-V pump
10 m³/h : NEXIS-V pump
16 m³/h : NEXIS-V pump
22 m³/h : NEXIS-V pump
36 m³/h : NEXIS-V pump
52 m³/h : NEXIS-V pump
} K : pump with cartridge

Module's mode of operation
2 : 2 pumps in cascade
3 : 3 pumps in cascade
4 : 4 pumps in cascade

Logic controller system :
CE + : Simplified electronic controls
SC : Advanced electronic controls
CC : Programmable logic control

Maximum working pressure :
16 - 25 bars

Three phase current :
T4 : TRI 400 V

Frequency converter (variant) :
Usable with SC and CC switch box

STANDARDS AND SPECIFICATIONS

- **Complies with European Marking Directives CE :**
  - Directive on Machinery 2006/42/CE and Low Voltage Directive 2006/95/CE
  - Electromagnetic Compatibility Directive (EMC) 2004/108/CE
  And the appropriate harmonised European standards (HEN):
  EN ISO 12100, EN 60204-1, EN 61000-6-1, EN 61000-6-2, EN 61000-6-3, EN 61000-6-4
- **Certified for use with drinking water: Certificate of Sanitary Conformity (ACS)**
- **Suitable for Electrical Installations in buildings:**
  IEC 60364-1 or its French version NF C 15-100
- **The pumps comply with:**
  - Regulation 547/2012/UE on the hydraulic efficiency of water pumps, the Directives for Energy related Products (ErP) 2009/125/CE: MEI≥0.70
  - Regulation 640/2009/CE on the efficiency of three-phase electric motors (from 0.75 to 375 kW), in the ErP Directive: IE2 or more.
  - A the Machinery Directives and to the HEN standard for pumps: EN 809+A1
- **Switch boxes comply with :**
  - The Low Voltage Directive and the HEN standards: EN 61439-1 & EN 61439-2
  - The EMC Directive and the HEN standards: EN 61000-6-1, EN 61000-6-2, EN 61000-6-3, EN 61000-6-4

DESCRIPTION OF THE BOOSTER PUMP

• ALTi-NEXIS V fitted with CC and CCFC switch boxes

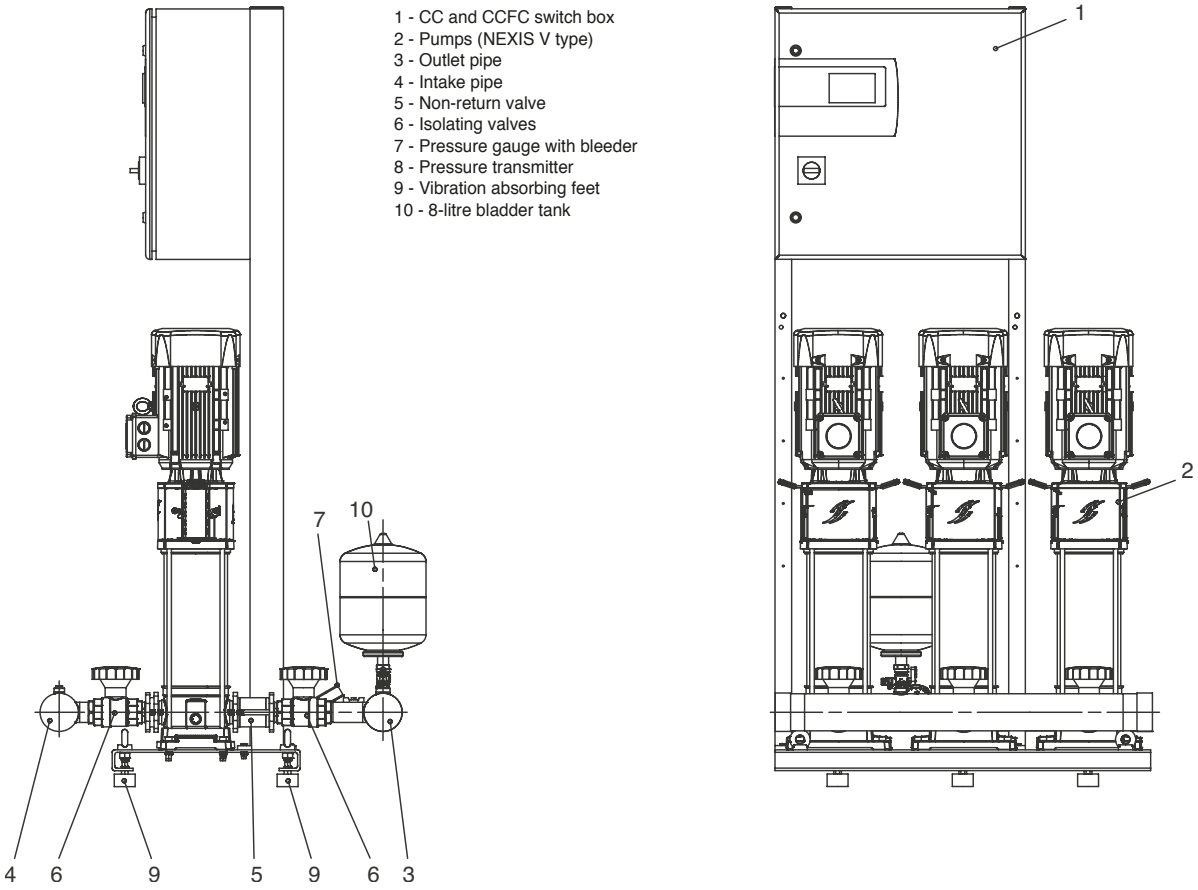

BASIC CONSTRUCTION

	ALTI-Nexis V avec coffret CC et CCFC						
Nexis V pump	4	6	10	16	22	36	52
	Fitted with mechanical seal with standard cartridge						
Non-return valves	Butterfly valve (low loss of pressure) Interchangeable cartridges				Butterfly valve (low loss of pressure)		
Isolating valve	Full bore ball valve						butterfly
	Geared handle				quarter turn		
Pipes	316 grade stainless steel				304 grade stainless steel		
Pipe/valve assembly	Screwed + O-ring seal				Screwed and glued		Seal + flange
8-litre bladder tank on the outlet pipe	Supplied as standard				Optional		

* a tank must be installed close to the booster pump for optimum operation. Its capacity must be appropriate for the installation.

COMPULSORY ACCESSORIES DEPENDING ON THE TYPE OF WATER SUPPLY

		ALTi-Nexis V		
	Components	2 pumps	3 pumps	4 pumps
Protection against low water levels	Pressure switch (connected to the mains water supply)	1	1	1
	Float (connected to a tank)	1	1	1

ALTI-NEXIS V

DESCRIPTION OF THE BOOSTER PUMP

• ALTi-NEXIS V fitted with SC and SCFC switch boxes

1 - SC and SCFC switch box
2 - Pumps (NEXIS V type)
3 - Outlet pipe
4 - Intake pipe
5 - Non-return valve
6 - Isolating valves
7 - Pressure gauge with bleeder
8 - Pressure transmitter
9 - Vibration absorbing feet
10 - Lifting rings

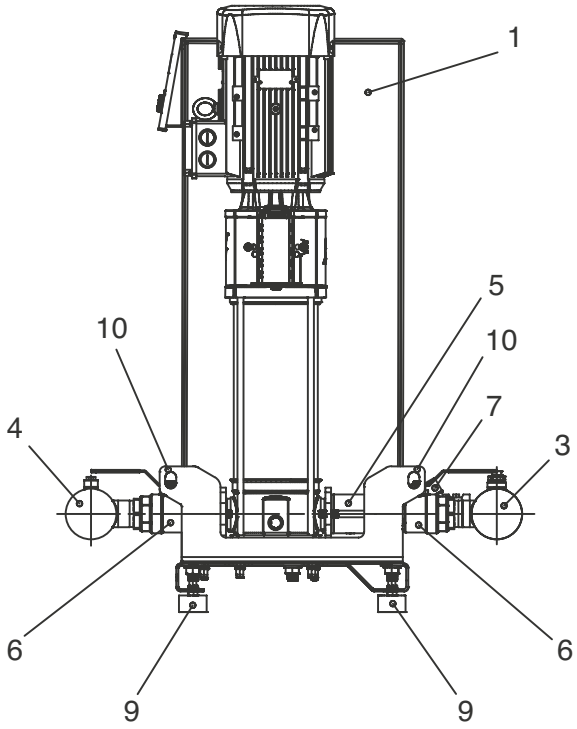

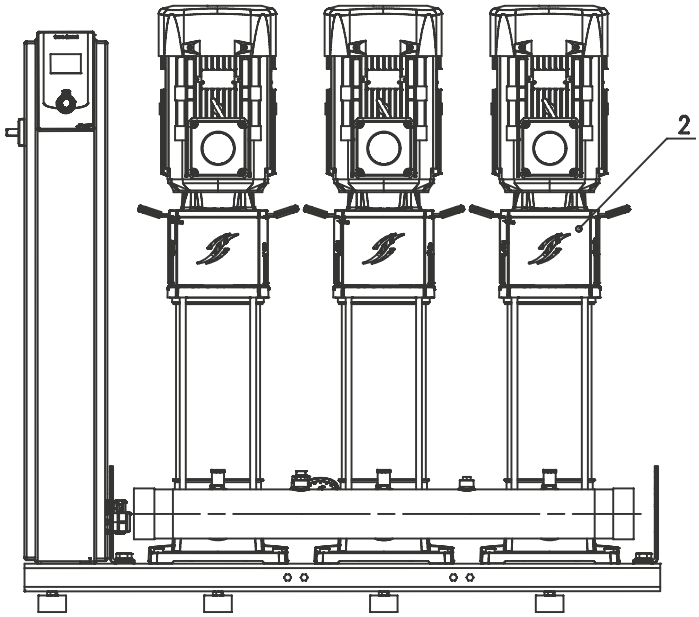

BASIC CONSTRUCTION

	Alti-Nexis V with SC and SCFC switch box						
Nexis V pump	4	6	10	16	22	36	52
	Fitted with mechanical seal without cartridge						
Non-return valves	Non-return valves Butterfly valve (low loss of pressure)						
	Interchangeable cartridge				With flanges		
Isolating valve	Mounting with flanges						Butterfly
	quarter turn						
Pipes	304 grade stainless steel						
Valve / pipe assembly	Screwed + O-ring seal						With flanges
8-litre bladder tank on the outlet pipe	Supplied as an option*						

* a tank must be installed close to the booster pump for optimum operation. Its capacity must be suitable for the installation.

COMPULSORY ACCESSORIES DEPENDING ON THE TYPE OF WATER SUPPLY

		ALTi-Nexis V		
Components		2 pumps	3 pumps	4 pumps
Protection against low water levels	Pressure switch (connected to the mains water supply)	1	1	1
	Float (connected to the tank)	1	1	1

DESCRIPTION OF THE BOOSTER PUMP

• ALTi-NEXIS V fitted with CE+ switch boxes

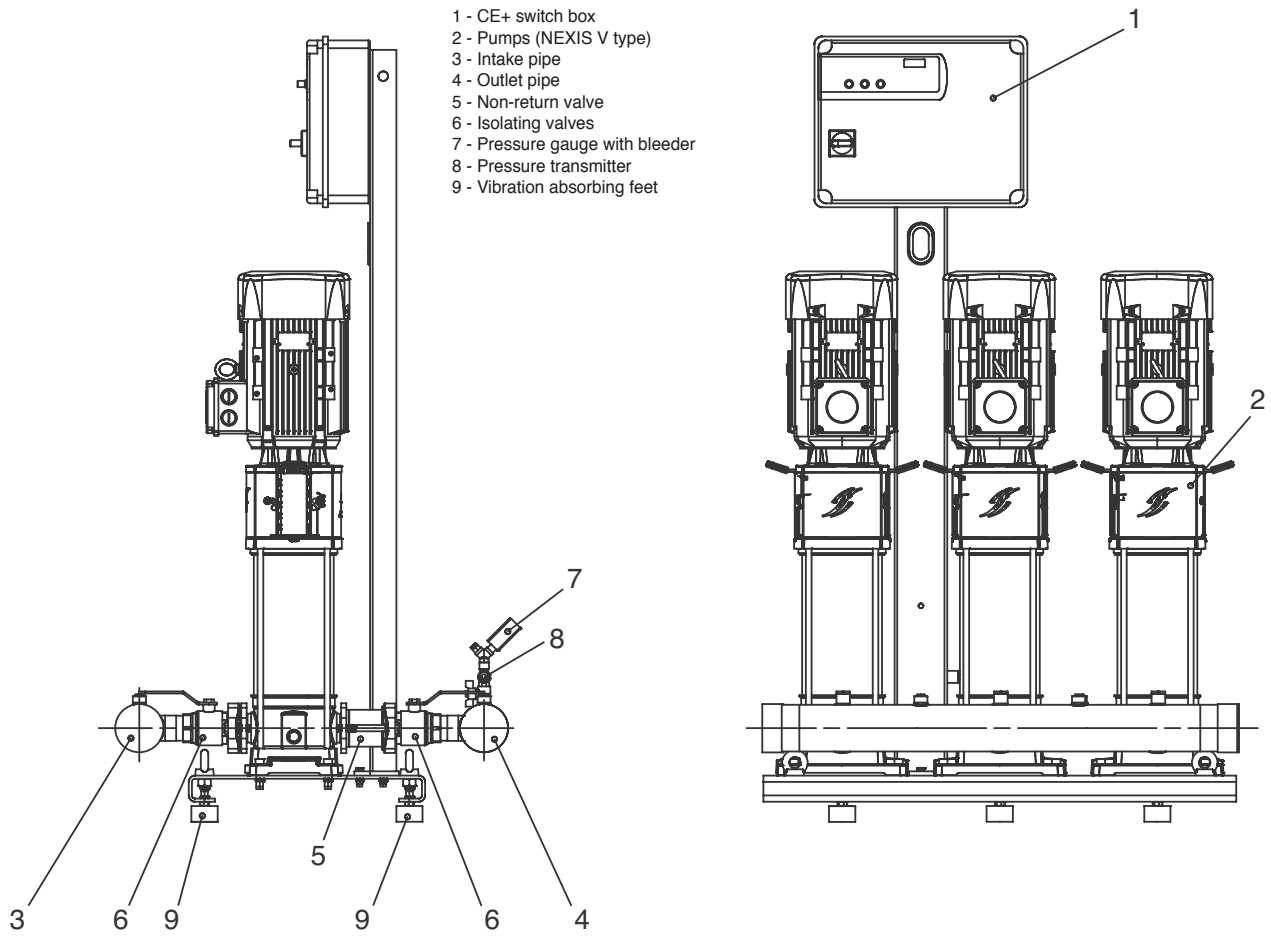

BASIC CONSTRUCTION

	Alti-Nexis V with CE+ switch box						
Nexis V pump	4	6	10	16	22	36	52
	Fitted with mechanical seal without cartridge				With cartridge		
Non-return valves	Butterfly valve (low loss of pressure) Interchangeable cartridges				Butterfly valve (low loss of pressure)		
Isolating valves	Full bore ball valve						butterfly
	quarter turn						
Pipes	304 grade stainless steel						
Valve / pipe assembly	Screwed glued						Seal + flange
8-litre bladder tank on the outlet pipe	Not available						

* un réservoir doit être installé près du surpresseur pour un fonctionnement optimal. Sa contenance doit être adapté à l'installation.

COMPULSORY ACCESSORIES DEPENDING ON THE TYPE OF WATER SUPPLY

		ALTi-Nexis V		
Components		2 pumps	3 pumps	4 pumps
Protection against low water levels	Pressure switch (connected to the mains water supply)	1	1	1
	Float (connected to the tank)	1	1	1

ALTI-NEXIS V

COMPONENTS

• **Example for a 3-pump ALTI-Nexis. The same settings for an ALTI-Nexis with 2 or 4 pumps.**

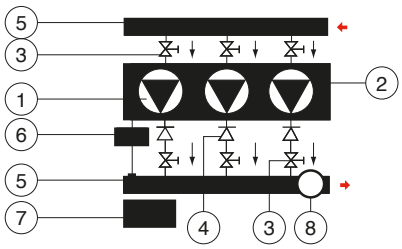

SUPPLIED AS STANDARD (1 to 8) :

1 - Two, three or four multistage pumps.
2 - Frame support.
3 - Isolating valves at the intake and outlet of the pumps.
4 - Non-return valves at the outlet of the pumps.
5 - Intake-outlet pipes.
6 - Pressure transmitter for pump controls.
7 - Control and protection cabinet.
8 - Eight-litre bladder tank on the versions fitted with CC and CCFC switch boxes

• **From the mains water supply**

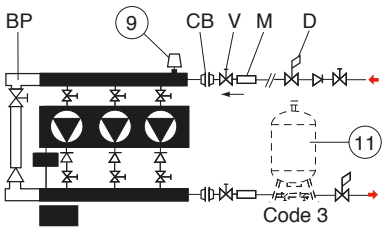

COMPULSORY COMPONENTS :

(depending on the water supply to the booster pump)

9 - Pressure switch to warn against low water levels, booster pump fed from the mains water supply. Or
10 - Float switch, delivered unmounted, booster pump fed from tank under pressure.
11 - Eight- to 2000-litre bladder tank, state max. operating pressure and capacity (optional for an extra charge)
12 - Balance pipe for tank intake.

Note: When a by-pass and a pressure reducing valve are installed on the intake to the booster pump, you are advised to install the pressure reducing valve between the by-pass and the booster pump

• **From a storage tank (under pressure)**

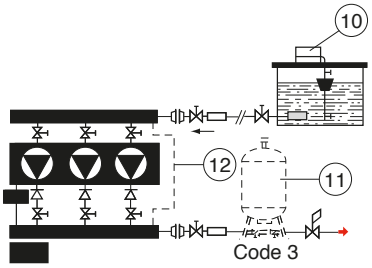

OPTIONAL COMPONENTS :

(options en supplément de prix)

- By-pass for direct water supply, when the mains supply pressure is adequate.
- Vibration damping rubber sleeves (supplied in pairs).
- Back flanges to be screwed or soldered onto pipes (supplied in pairs) depending on the size of the pipes.
- Pressure reducing valve-pressure regulator on intake and/or outlet.
- Isolating valves.

CE + SWITCH BOXES

Electronics unit

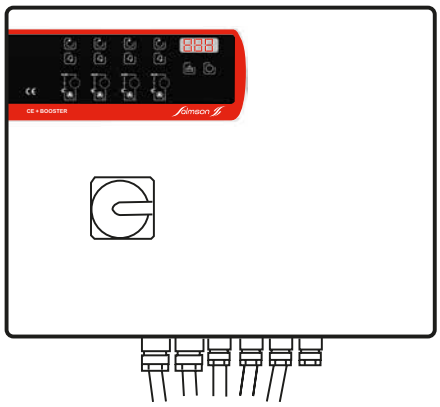

Water-tightness : IP 54
Three-phase supply : 230/400V (50 Hz)
220 /380 V (60 Hz-option)

Features of the CE+ switch box :

(2 to 4 pumps).

This logic controller system in a plastic switch box uses a microcontroller to control the pumps.
• It covers pumps for ratings from 1.1 to 15kW.

•• It controls pumps in cascade mode using a 4-20mA pressure transmitter.

• The CE+ switch box is suitable for 5 versions of the available transmitters; 0-6, 0-10, 0-16, 0- 25, 0-40 bars.

• The delay time for high-pressure shut-off of the main pump is adjustable from 5 to 180 secs.

• The 7-segment screen on the switch box means that the pressure setting can be read so that the booster pump is easy to configure

• A high protection class (IP54) gives better protection for the system

• A function test is automatically performed every 6 hours to check that the booster pump is in good working order (can be deactivated).
• The remote control can shut down the booster pump.

The CE+ switch box includes a number of warning devices, including:

- Dry running
- Blocked pump
- Missing phase
- Function test fault
- Short circuit
- Electrical overload
- Under-load (if current < 0.5A)
- Main switch on the front of switch box
- Low pressure alarm

Error messages may be sent either for each pump, or for the booster unit as a whole, depending on whether there is a fault on one pump or a general fault.

Control panel

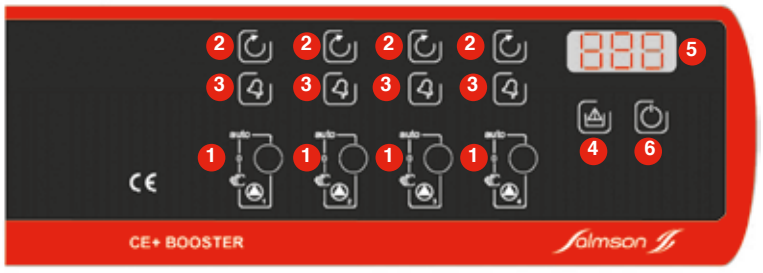

1 - 3-position switch Auto-Reset-Manu.
2 - Indicator: pump-on indicator.
3 - Indicator: pump fault indicator.
4 - Indicator: low water level.
5 - 7-segment display.
6 - General supply indicator

CONTROL CABINET SC (FIXED SPEED), AND SCFC (VARIABLE SPEED)

Switch box with integral logic controller

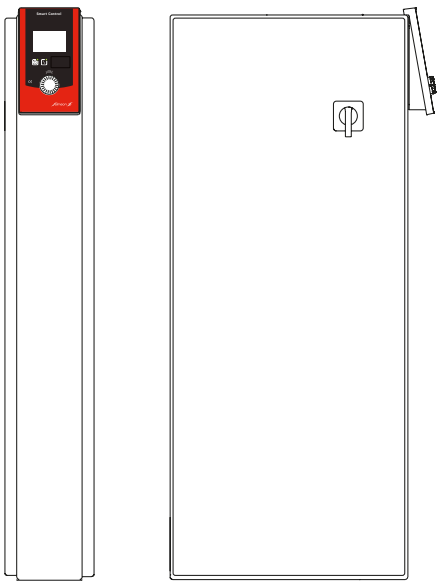

3~ supply : 230/400V (50 Hz)
220 /380 V (60 Hz-option)

DESCRIPTION

On the front:

- Back-lit control and viewing LCD screen.
- power on LED for the booster pump and general fault indicator.
- Browse button for selecting and adjusting the installation's settings.
- infrared-emitting communication diodes for access to Salmson Services data.
- Isolating knob for safety and turning power on.

Inside:

- Thermal magnetic circuit breaker with slider for adjusting current strength to the motor (and reset button)..
- Two contacts for each pump (one for fixed speed and one for variable speed on SCFC version).
- Safety and insulating transformer.
- Externally controlled general isolating switch with lockable handle.
- A logic controller fitted with a microprocessor for the full control of the booster pump (starts, stops, protections...).
- A speed controller (SCFC version PDI function).
- A motor filter (SCFC version).
- A power connection terminal block(General supply, motors).
- A terminal block for the external controls (pressure transmitter, float switch or pressure safety switch, etc..)..
- a document holder built into the door.

OPERATION

The pressure transmitter records the existing pressure in the outlet pipe and sends signals to the switch box which controls the stopping and starting of the pumps in cascade.

Features of the switch box:

- ability to designate a reserve pump.
- function test for pumps.
- configurable low water level alarm.
- adjustment of the starting and stopping thresholds for each pump.
- setting delay times for starting and stopping the pump.
- remote control for stopping (optional BUS communication needed).
- 2 control settings with remote switching between them (optional BUS communication needed).
- adjustment of the starting and stopping thresholds for each pump.
- Adjustable remote setting.
- 2 speeds for filling the pipes for greater safety.
- Bus communication with supervision system (Bacnet, Modbus) (optional).
- possible to readjust the booster behaviour after an alarm.
- operating statistics.
- cyclical changeover between the main pumps and back-up pumps using various modes (timer, number of starts).
- 2 menus: easy menu for simple and fast start-up and expert menu to deal with all the settings.
- selection of the Auto, Manual or Stop mode for each pump.

Control panel



Viewing screen and settings knob

ALTI-NEXIS V

CONTROL SWITCH BOARD CC (FIXED SPEED) AND CCFC (VARIABLE SPEED)

Switch box with programmable logic controller

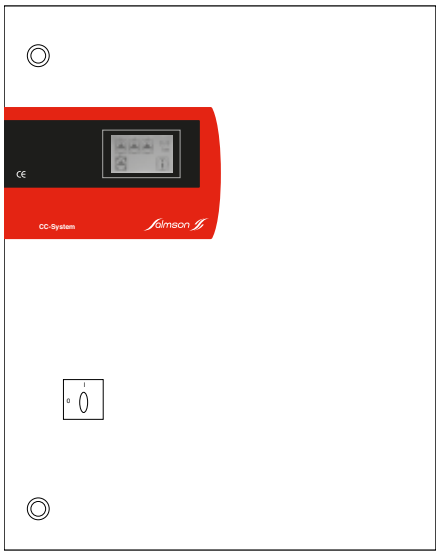

3~ supply: 230/400V (50 Hz)
220 /380 V (60 Hz-option)

DESCRIPTION

On the front :

- Back-lit LCD touch screen screen for control and viewing.
- Locks.
- Safety isolating and power-up knob.

Inside:

- Thermal magnetic circuit breaker with slider for adjusting current strength to the motor (and reset button).
- Two contacts for each pump (one for fixed speed and one for variable speed on CCFC version).
- Safety and insulating transformer.
- General isolating switch with lockable handle for external controls.
- Three-position switch Auto/Stop/Manual for each pump.
- A Programmable logic controller (PLC).
- A speed controller (version CCFC).
- A motor filter (version CCFC).
- A inlet filter card.
- A power connection terminal block (general supply, motors).
- A terminal block for external controls (pressure transmitter, float switch or pressure safety switch, remote controls etc.).

FONCTIONNEMENT :

The pressure transmitter records the existing pressure in the outlet pipe and sends signals to the programmable logic controller.
If the pressure becomes lower than the value of setting, the regulator sends a message to the pressure controller to increase the speed of the pump being used, referred to as “controlled”.

If the controlled pump has reached its maximum rotation speed but the pressure is still too low, the logic controller cuts-in pump P2 at a fixed speed; P1’s speed adjusts to maintain the selected setting. If the combined flow of P1 and P2 is not sufficient, then P3 and P4 are cut in successively.
If the pressure becomes too high, the logic controller adjusts P1 to the minimum selected speed, and if the pressure is still too high, it stops the last fixed-speed pump to be cut in. Then, P1 is returned to its maximum speed before being reduced to the minimum speed, then the last-but-one pump is stepped down to a fixed speed (where necessary), and so on until the required setting is reached.
At the end of the cycle, if there is no more demand, the logic controller will detect that there is now no flow and will cut out pump P1.

Note :

On all booster pump models (2 to 4 pumps), the starting order of the pumps changes after each stop, or after a adjustable time or after an adjustable operating period.

Control panel



Touch viewing and settings screen

ELECTRICAL FEATURES AT 2900 RPM

Type	Motor rating P2 installed		Max service rating	Voltage	I total 2 pumps	I total 3 pumps	I total 4 pumps
	kW		bar		A	A	A
ALTI-NEXIS-V403	2, 3 ou 4x	0,37	16	400V-3-50Hz	1,78	2,67	3,56
ALTI-NEXIS-V404	2, 3 ou 4x	0,55	16	400V-3-50Hz	2,66	3,99	5,32
ALTI-NEXIS-V406	2, 3 ou 4x	0,75	16	400V-3-50Hz	3,24	4,86	6,48
ALTI-NEXIS-V407	2, 3 ou 4x	1,1	16	400V-3-50Hz	4,8	7,2	9,6
ALTI-NEXIS-V409	2, 3 ou 4x	1,1	16	400V-3-50Hz	4,8	7,2	9,6
ALTI-NEXIS-V410	2, 3 ou 4x	1,5	16	400V-3-50Hz	6,2	9,3	12,4
ALTI-NEXIS-V412	2, 3 ou 4x	1,5	16	400V-3-50Hz	6,2	9,3	12,4
ALTI-NEXIS-V414	2, 3 ou 4x	2,2	16	400V-3-50Hz	8,8	13,2	17,6
ALTI-NEXIS-V416	2, 3 ou 4x	2,2	16	400V-3-50Hz	8,8	13,2	17,6
ALTI-NEXIS-V418	2, 3 ou 4x	2,2	16	400V-3-50Hz	8,8	13,2	17,6
ALTI-NEXIS-V603	2, 3 ou 4x	0,55	16	400V-3-50Hz	2,66	3,99	5,32
ALTI-NEXIS-V604	2, 3 ou 4x	0,75	16	400V-3-50Hz	3,24	4,86	6,48
ALTI-NEXIS-V605	2, 3 ou 4x	1,1	16	400V-3-50Hz	4,8	7,2	9,6
ALTI-NEXIS-V606	2, 3 ou 4x	1,1	16	400V-3-50Hz	4,8	7,2	9,6
ALTI-NEXIS-V607	2, 3 ou 4x	1,5	16	400V-3-50Hz	6,2	9,3	12,4
ALTI-NEXIS-V608	2, 3 ou 4x	1,5	16	400V-3-50Hz	6,2	9,3	12,4
ALTI-NEXIS-V609	2, 3 ou 4x	2,2	16	400V-3-50Hz	8,8	13,2	17,6
ALTI-NEXIS-V610	2, 3 ou 4x	2,2	16	400V-3-50Hz	8,8	13,2	17,6
ALTI-NEXIS-V611	2, 3 ou 4x	2,2	16	400V-3-50Hz	8,8	13,2	17,6
ALTI-NEXIS-V612	2, 3 ou 4x	3	16	400V-3-50Hz	11,6	17,4	23,2
ALTI-NEXIS-V613	2, 3 ou 4x	3	16	400V-3-50Hz	11,6	17,4	23,2
ALTI-NEXIS-V614	2, 3 ou 4x	3	16	400V-3-50Hz	11,6	17,4	23,2
ALTI-NEXIS-V615	2, 3 ou 4x	3	16	400V-3-50Hz	11,6	17,4	23,2
ALTI-NEXIS-V616	2, 3 ou 4x	4	16	400V-3-50Hz	16,4	24,6	32,8
ALTI-NEXIS-V1002	2, 3 ou 4x	0,75	16	400V-3-50Hz	3,24	4,86	6,48
ALTI-NEXIS-V1003	2, 3 ou 4x	1,1	16	400V-3-50Hz	4,8	7,2	9,6
ALTI-NEXIS-V1004	2, 3 ou 4x	1,5	16	400V-3-50Hz	6,2	9,3	12,4
ALTI-NEXIS-V1005	2, 3 ou 4x	2,2	16	400V-3-50Hz	8,8	13,2	17,6
ALTI-NEXIS-V1006	2, 3 ou 4x	2,2	16	400V-3-50Hz	8,8	13,2	17,6
ALTI-NEXIS-V1007	2, 3 ou 4x	3	16	400V-3-50Hz	11,6	17,4	23,2
ALTI-NEXIS-V1008	2, 3 ou 4x	3	16	400V-3-50Hz	11,6	17,4	23,2
ALTI-NEXIS-V1009	2, 3 ou 4x	4	16	400V-3-50Hz	16,4	24,6	32,8
ALTI-NEXIS-V1010	2, 3 ou 4x	4	16	400V-3-50Hz	16,4	24,6	32,8
ALTI-NEXIS-V1011	2, 3 ou 4x	4	16	400V-3-50Hz	16,4	24,6	32,8
ALTI-NEXIS-V1012	2, 3 ou 4x	5,5	16	400V-3-50Hz	22,4	33,6	44,8
ALTI-NEXIS-V1013	2, 3 ou 4x	5,5	16	400V-3-50Hz	22,4	33,6	44,8
ALTI-NEXIS-V1015	2, 3 ou 4x	5,5	16	400V-3-50Hz	22,4	33,6	44,8

ALTI-NEXIS V

ELECTRICAL FEATURES AT 2900 RPM

Type	Motor rating P2 installed		Max service rating	Voltage	I total 2 pumps	I total 3 pumps	I total 4 pumps
	kW		bar		A	A	A
ALTI-NEXIS-V1603	2, 3 ou 4x	2,2	16	400V-3-50Hz	8,8	13,2	17,6
ALTI-NEXIS-V1604	2, 3 ou 4x	3	16	400V-3-50Hz	11,6	17,4	23,2
ALTI-NEXIS-V1605	2, 3 ou 4x	4	16	400V-3-50Hz	15	22,5	30
ALTI-NEXIS-V1606	2, 3 ou 4x	4	16	400V-3-50Hz	15	22,5	30
ALTI-NEXIS-V1607	2, 3 ou 4x	5,5	16	400V-3-50Hz	20,2	30,3	40,4
ALTI-NEXIS-V1608	2, 3 ou 4x	5,5	16	400V-3-50Hz	20,2	30,3	40,4
ALTI-NEXIS-V1609	2, 3 ou 4x	7,5	16	400V-3-50Hz	27	40,5	54
ALTI-NEXIS-V1610	2, 3 ou 4x	7,5	16	400V-3-50Hz	27	40,5	54
ALTI-NEXIS-V1611	2, 3 ou 4x	7,5	16	400V-3-50Hz	27	40,5	54
ALTI-NEXIS-V2202	2, 3 ou 4x	3	16	400V-3-50Hz	8,8	13,2	17,6
ALTI-NEXIS-V2203	2, 3 ou 4x	4	16	400V-3-50Hz	15,4	23,1	30,8
ALTI-NEXIS-V2204	2, 3 ou 4x	5,5	16	400V-3-50Hz	20,2	30,3	40,4
ALTI-NEXIS-V2205	2, 3 ou 4x	7,5	16	400V-3-50Hz	27	40,5	54
ALTI-NEXIS-V2206	2, 3 ou 4x	7,5	16	400V-3-50Hz	27	40,5	54
ALTI-NEXIS-V2207	2, 3 ou 4x	9	16	400V-3-50Hz	32,6	48,9	65,2
ALTI-NEXIS-V2208	2, 3 ou 4x	11	16	400V-3-50Hz	39,6	59,4	79,2
ALTI-NEXIS-V3602/2	2, 3 ou 4x	4	16	400V-3-50Hz	8,6	12,9	17,2
ALTI-NEXIS-V3602/1	2, 3 ou 4x	5,5	16	400V-3-50Hz	20,2	30,3	40,4
ALTI-NEXIS-V3602	2, 3 ou 4x	5,5	16	400V-3-50Hz	20,2	30,3	40,4
ALTI-NEXIS-V3603/2	2, 3 ou 4x	7,5	16	400V-3-50Hz	27	40,5	54
ALTI-NEXIS-V3603/1	2, 3 ou 4x	7,5	16	400V-3-50Hz	27	40,5	54
ALTI-NEXIS-V3603	2, 3 ou 4x	9	16	400V-3-50Hz	32,6	48,9	65,2
ALTI-NEXIS-V3604/2	2, 3 ou 4x	11	16	400V-3-50Hz	40	60	80
ALTI-NEXIS-V3604	2, 3 ou 4x	11	16	400V-3-50Hz	40	60	80
ALTI-NEXIS-V3605/2	2, 3 ou 4x	15	16	400V-3-50Hz	52,4	78,6	104,8
ALTI-NEXIS-V3605	2, 3 ou 4x	15	16	400V-3-50Hz	52,4	78,6	104,8
ALTI-NEXIS-V3606/2	2, 3 ou 4x	15	16	400V-3-50Hz	52,4	78,6	104,8
ALTI-NEXIS-V3606 *	2, 3 ou 4x	18,5	16	400V-3-50Hz	64	96	128
ALTI-NEXIS-V5202/2	2, 3 ou 4x	5,5	16	400V-3-50Hz	20,2	30,3	40,4
ALTI-NEXIS-V5202	2, 3 ou 4x	7,5	16	400V-3-50Hz	27	40,5	54
ALTI-NEXIS-V5203/2	2, 3 ou 4x	11	16	400V-3-50Hz	40	60	80
ALTI-NEXIS-V5203	2, 3 ou 4x	11	16	400V-3-50Hz	40	60	80
ALTI-NEXIS-V5204/2	2, 3 ou 4x	15	16	400V-3-50Hz	52,4	78,6	104,8
ALTI-NEXIS-V5204	2, 3 ou 4x	15	16	400V-3-50Hz	52,4	78,6	104,8
ALTI-NEXIS-V5205/2 *	2, 3 ou 4x	18,5	16	400V-3-50Hz	64	96	128
ALTI-NEXIS-V5205 *	2, 3 ou 4x	18,5	16	400V-3-50Hz	64	96	128
ALTI-NEXIS-V5206/2 *	2, 3 ou 4x	22	16	400V-3-50Hz	76	114	152

*only with CC and SC switch box

HYDRAULIC PERFORMANCE - ALTI-NEXIS V - SERIES 400*

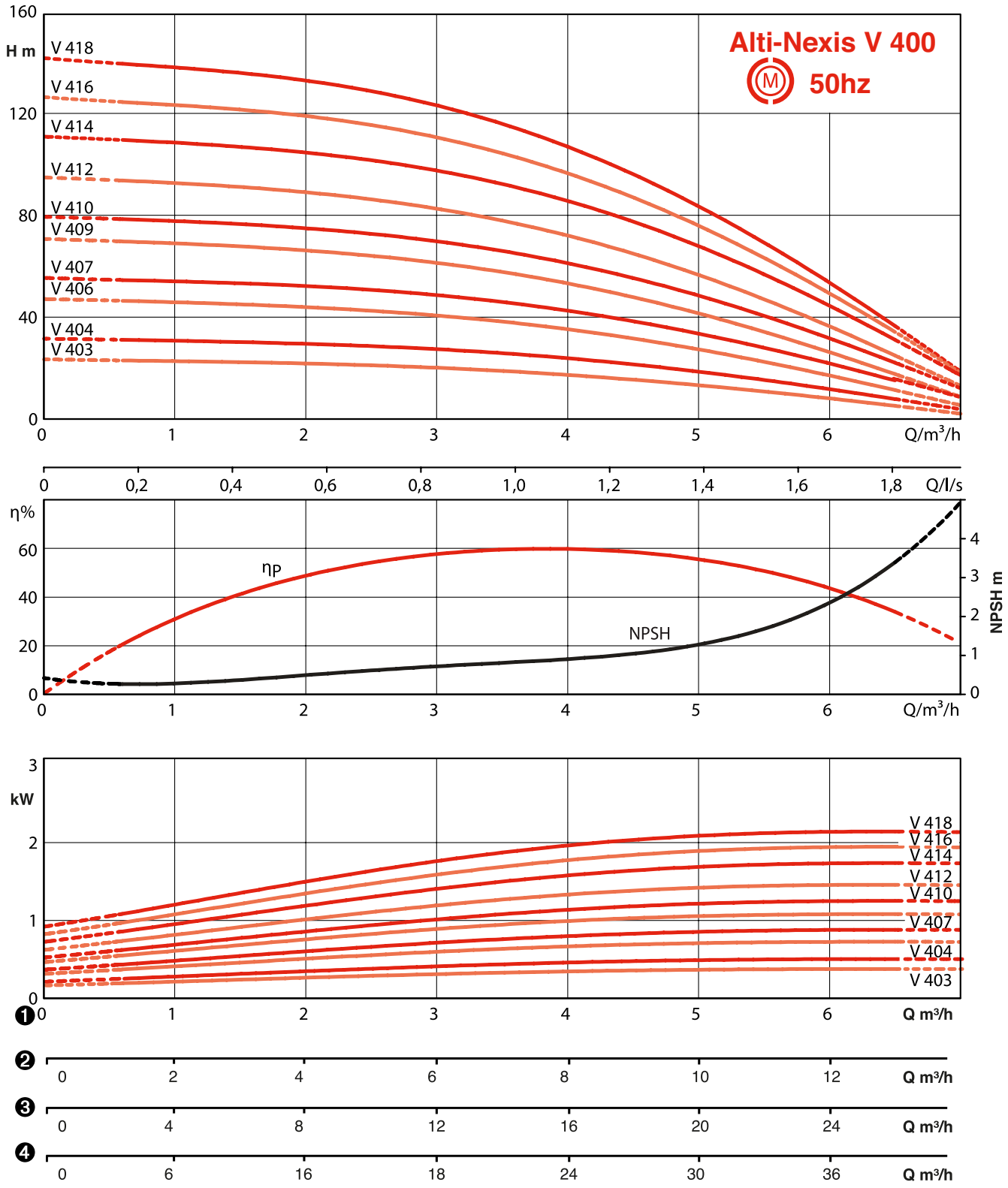

* data derived from the graphs for the pump

ALTI-NEXIS V

HYDRAULIC PERFORMANCE - ALTI-NEXIS V - SERIES 600*

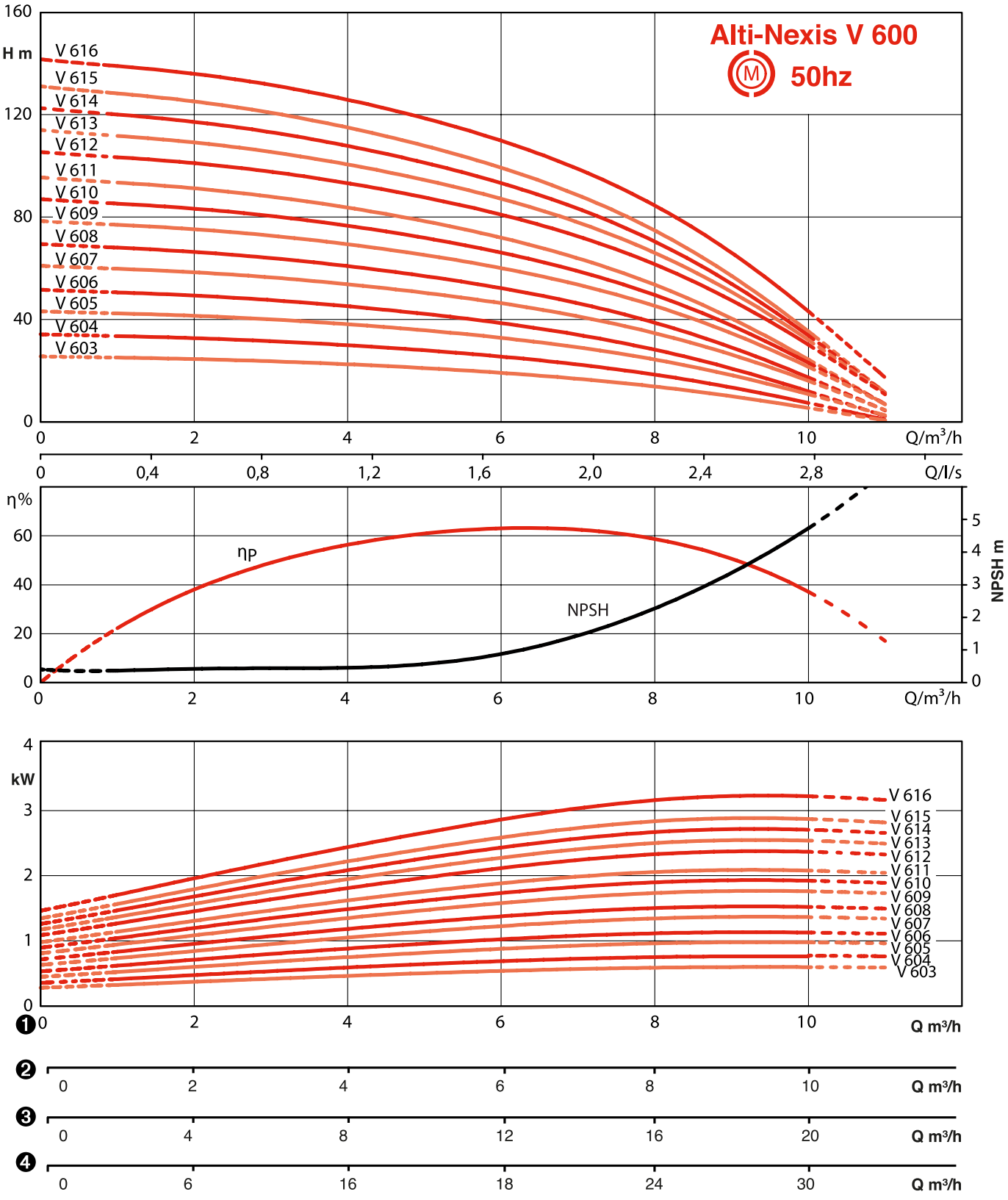

* data derived from the graphs for the pump

HYDRAULIC PERFORMANCE - ALTI-NEXIS V - SERIES 1000*

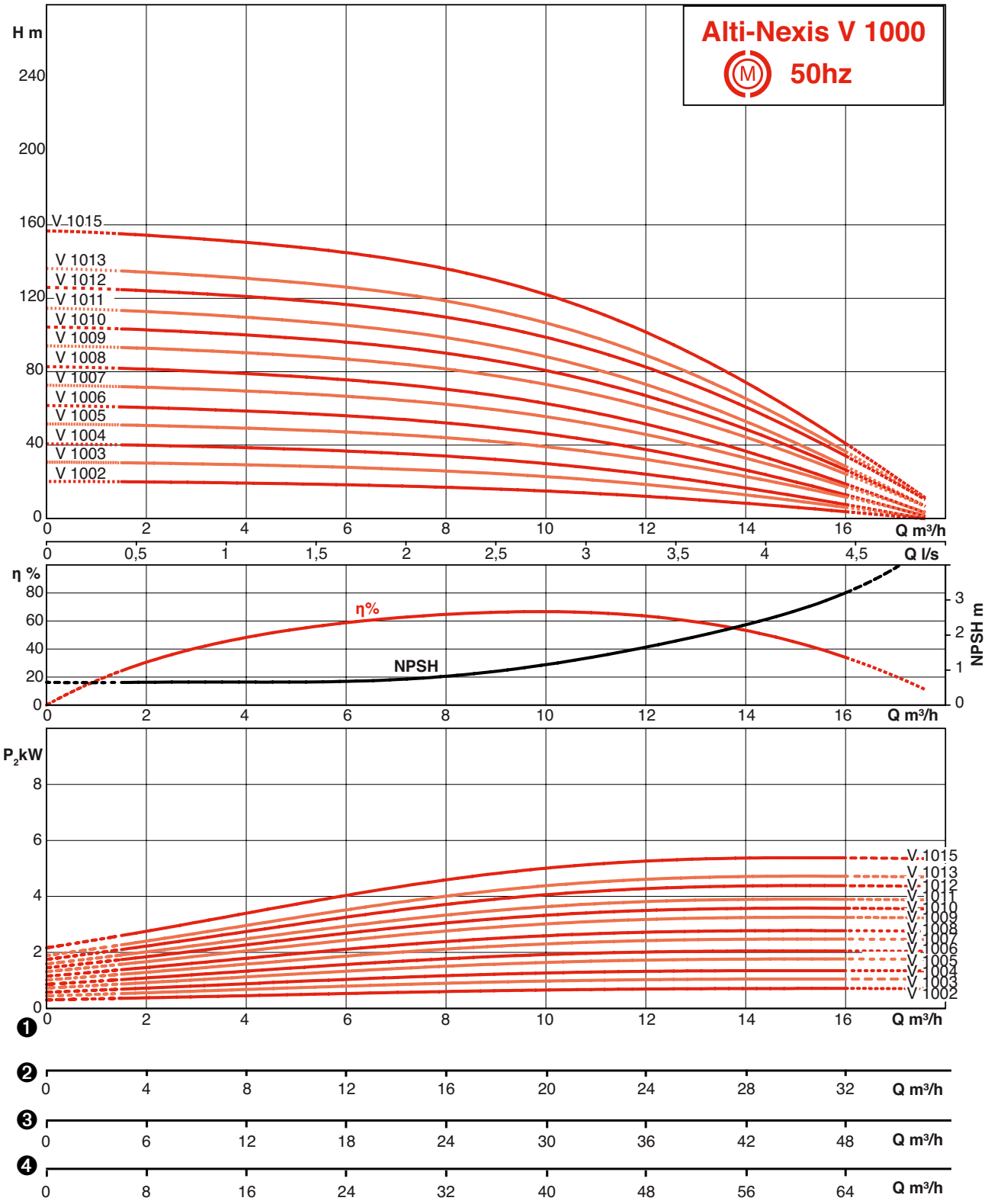

* data derived from the graphs for the pump

ALTI-NEXIS V

HYDRAULIC PERFORMANCE - ALTI-NEXIS V - SERIES 1600*

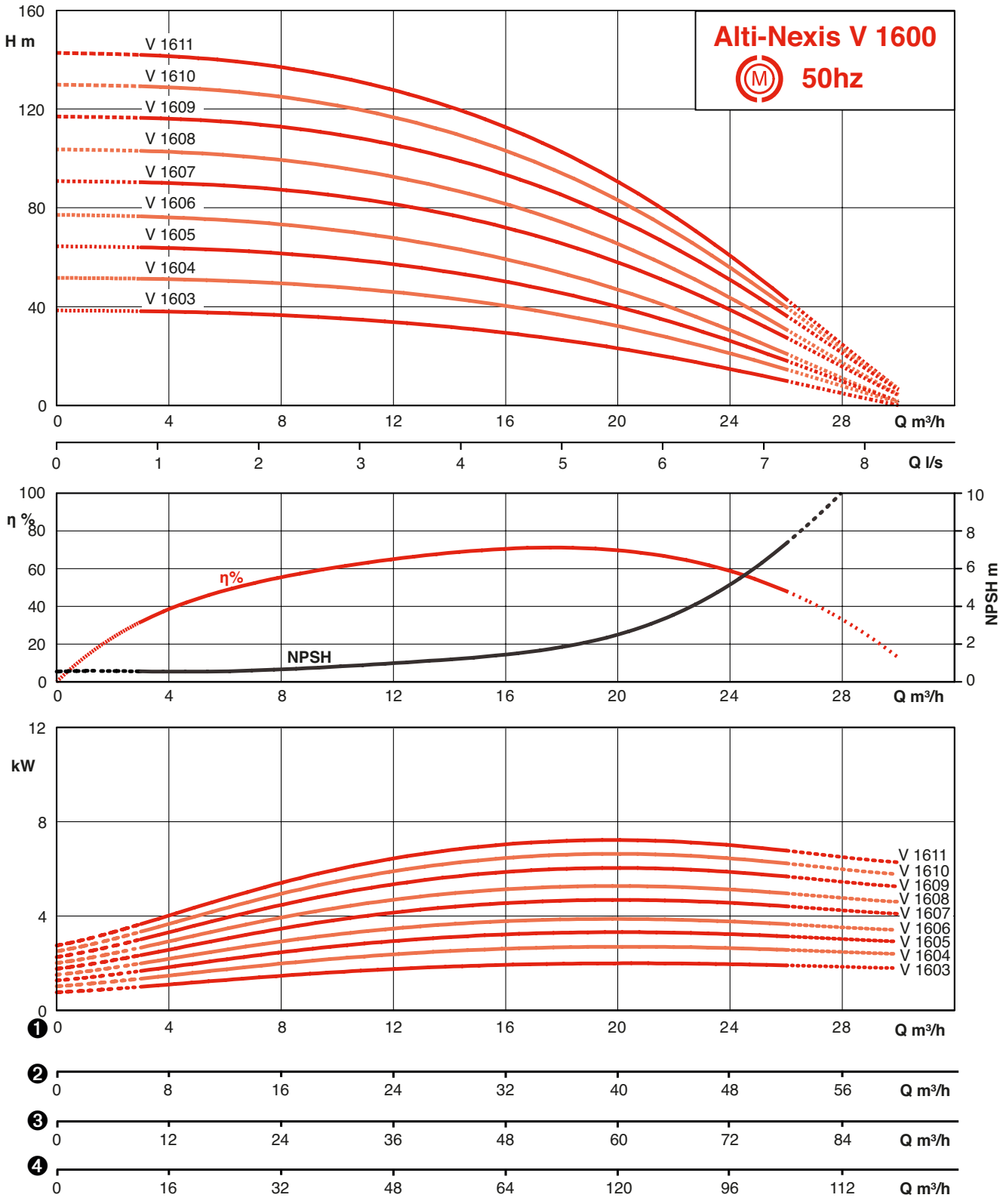

* data derived from the graphs for the pump

HYDRAULIC PERFORMANCE - ALTI-NEXIS V - SERIES 2200*

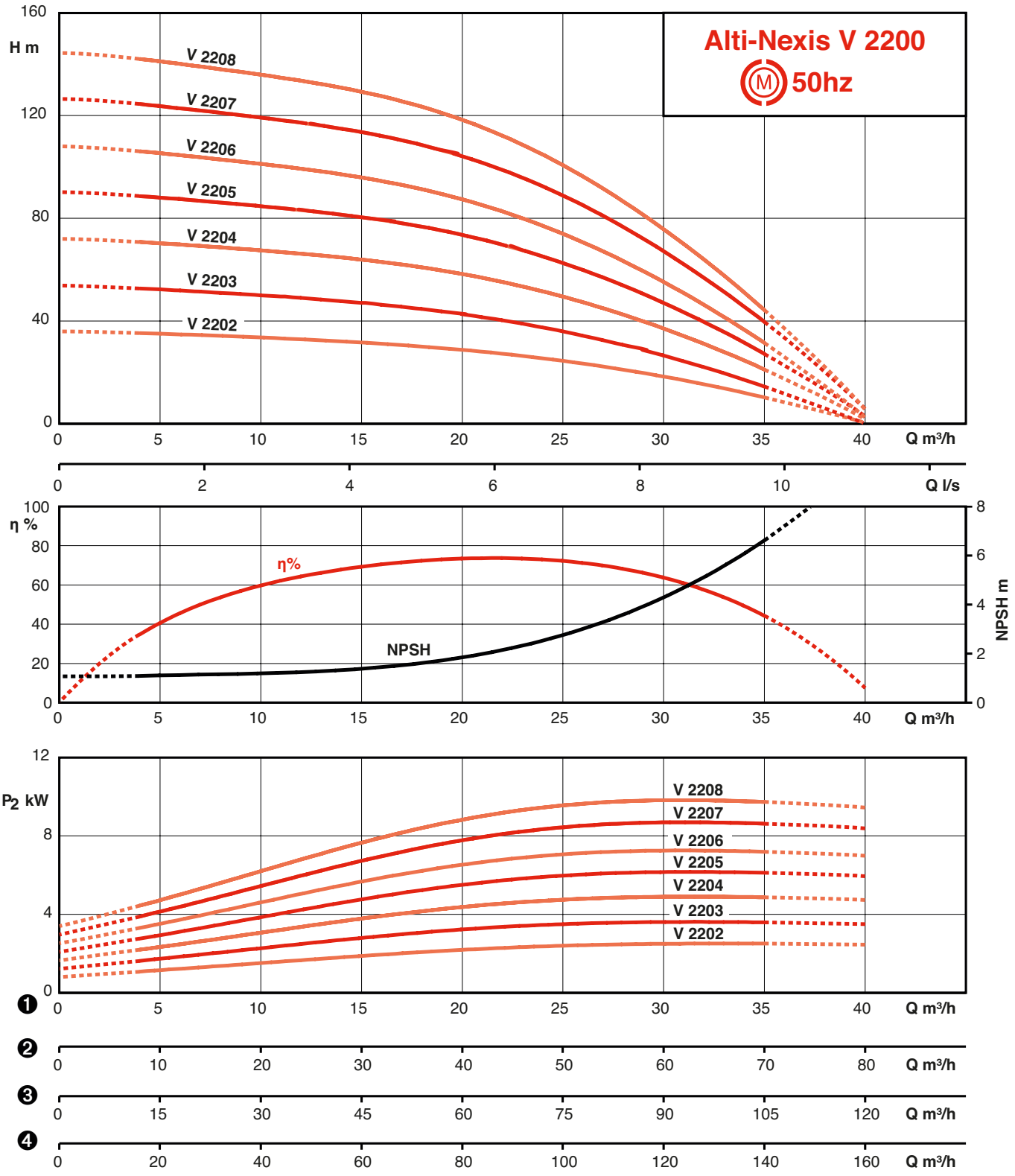

* data derived from the graphs for the pump

ALTI-NEXIS V

HYDRAULIC PERFORMANCE - ALTI-NEXIS V - SERIES 3600*

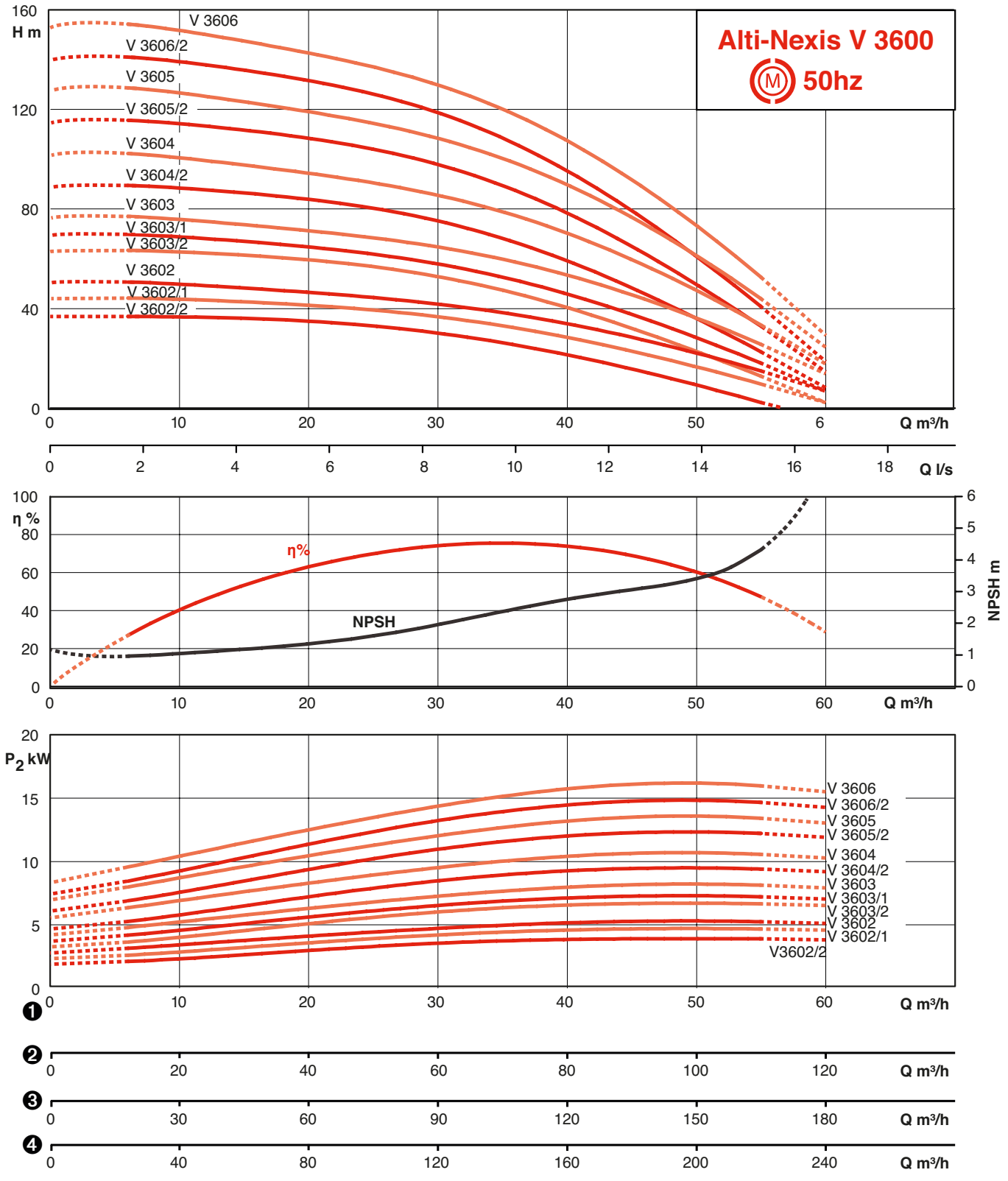

* data derived from the graphs for the pump

HYDRAULIC PERFORMANCE - ALTI-NEXIS V - SERIES 5200*

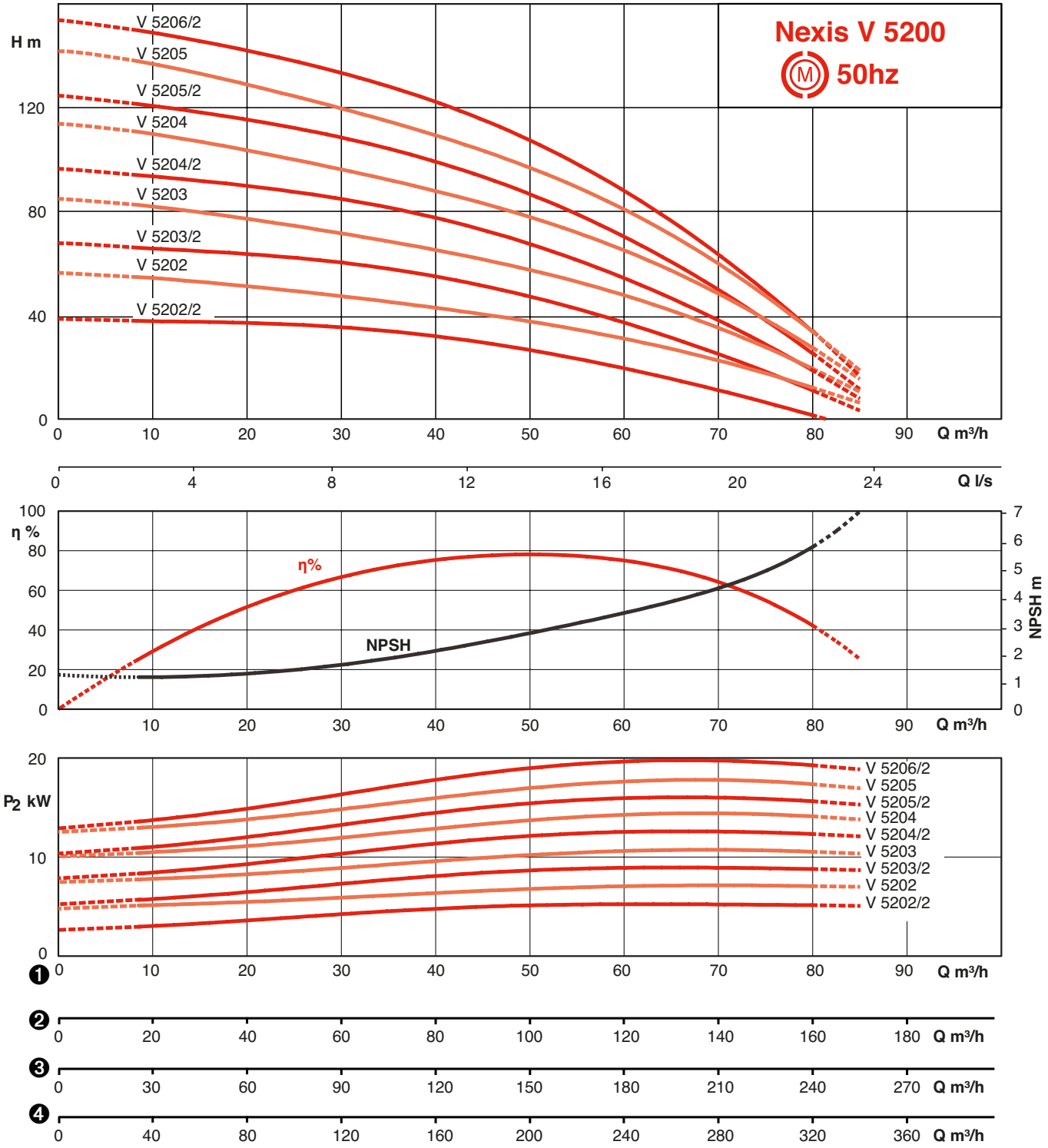

* data derived from the graphs for the pump

ALTI-NEXIS V

DIMENSIONS - ALTI-NEXIS V SERIES - CE+ VERSION

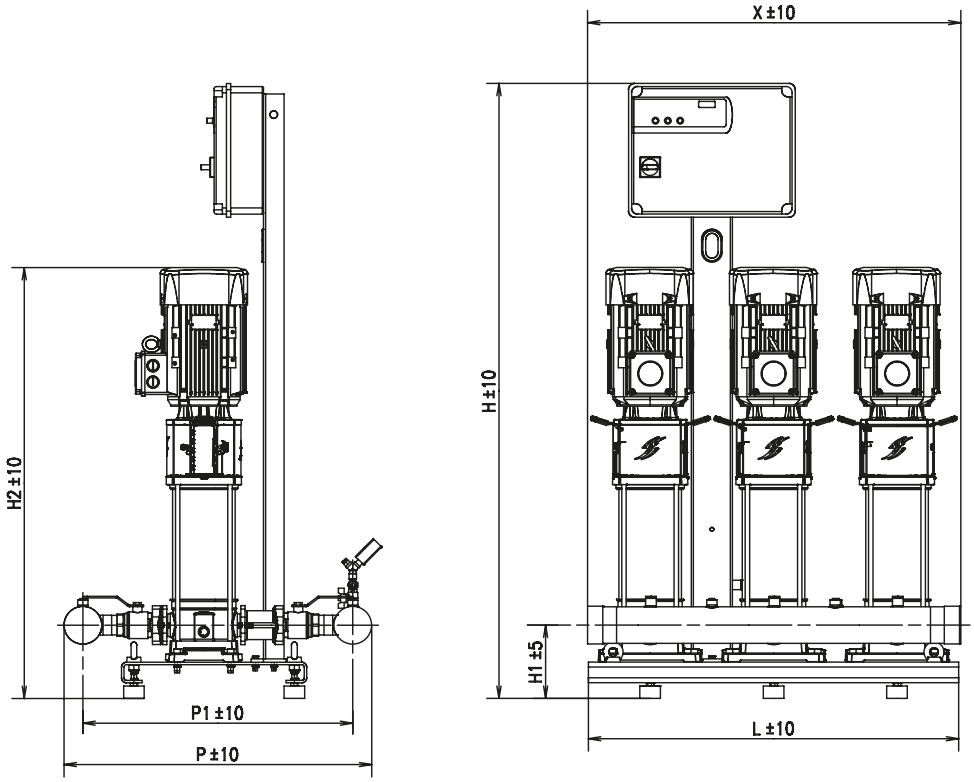

TYPE	Ø	H	L	P	H1	H2	X	P1	Mass	
	Pipes	mm	mm	mm	mm	mm	mm	mm	Incl.packaging	Net
2 PUMPS										
ALTI-NEXIS-V403-2-CE-16-T4-03	1"1/2	1360	600	580	138	709	600	532	114	88
ALTI-NEXIS-V404-2-CE-16-T4-03	1"1/2	1360	600	580	138	734	600	532	116	90
ALTI-NEXIS-V406-2-CE-16-T4-03	1"1/2	1360	600	580	138	804	600	532	122	96
ALTI-NEXIS-V407-2-CE-16-T4-03	1"1/2	1360	600	580	138	829	600	532	126	100
ALTI-NEXIS-V409-2-CE-16-T4-03	1"1/2	1360	600	580	138	879	600	532	128	102
ALTI-NEXIS-V410-2-CE-16-T4-03	1"1/2	1360	600	580	138	936	600	532	142	116
ALTI-NEXIS-V412-2-CE-16-T4-03	1"1/2	1360	600	580	138	986	600	532	144	118
ALTI-NEXIS-V414-2-CE-16-T4-03	1"1/2	1360	600	580	138	1036	600	532	152	126
ALTI-NEXIS-V416-2-CE-16-T4-03	1"1/2	1485	600	580	138	1086	600	532	157	131
ALTI-NEXIS-V418-2-CE-16-T4-03	1"1/2	1485	600	580	138	1136	600	532	159	133
ALTI-NEXIS-V603-2-CE-16-T4-03	2"	1360	600	605	138	746	600	545	119	92
ALTI-NEXIS-V604-2-CE-16-T4-03	2"	1360	600	605	138	803	600	545	125	98
ALTI-NEXIS-V605-2-CE-16-T4-03	2"	1360	600	605	138	841	600	545	129	102
ALTI-NEXIS-V606-2-CE-16-T4-03	2"	1360	600	605	138	878	600	545	131	104
ALTI-NEXIS-V607-2-CE-16-T4-03	2"	1360	600	605	138	948	600	545	141	114
ALTI-NEXIS-V608-2-CE-16-T4-03	2"	1360	600	605	138	986	600	545	143	116
ALTI-NEXIS-V609-2-CE-16-T4-03	2"	1360	600	605	138	1023	600	545	149	122
ALTI-NEXIS-V610-2-CE-16-T4-03	2"	1485	600	605	138	1061	600	545	158	131
ALTI-NEXIS-V611-2-CE-16-T4-03	2"	1485	600	605	138	1136	600	545	160	133
ALTI-NEXIS-V612-2-CE-16-T4-03	2"	1635	600	605	138	1171	600	545	168	141
ALTI-NEXIS-V613-2-CE-16-T4-03	2"	1485	600	605	138	1246	600	545	170	143
ALTI-NEXIS-V614-2-CE-16-T4-03	2"	1485	600	605	138	1246	600	545	172	145

DIMENSIONS - ALTI-NEXIS V SERIES - CE+ VERSION

TYPE	Ø	H	L	P	H1	H2	X	P1	Mass	
	Pipes	mm	mm	mm	mm	mm	mm	mm	Incl.packaging	Net
2 PUMPS										
ALTI-NEXIS-V615-2-CE-16-T4-03	2"	1485	600	605	138	1321	600	545	172	145
ALTI-NEXIS-V616-2-CE-16-T4-03	2"	1485	600	605	138	1365	600	545	194	167
ALTI-NEXIS-V1002-2-CE-16-T4-03	2"1/2	1360	600	730	178	749	600	641	135	108
ALTI-NEXIS-V1003-2-CE-16-T4-03	2"1/2	1360	600	730	178	787	600	641	139	112
ALTI-NEXIS-V1004-2-CE-16-T4-03	2"1/2	1360	600	730	178	894	600	641	151	124
ALTI-NEXIS-V1005-2-CE-16-T4-03	2"1/2	1360	600	730	178	894	600	641	17	130
ALTI-NEXIS-V1006-2-CE-16-T4-03	2"1/2	1360	600	730	178	932	600	641	159	132
ALTI-NEXIS-V1007-2-CE-16-T4-03	2"1/2	1635	600	730	178	1004	600	641	170	143
ALTI-NEXIS-V1008-2-CE-16-T4-03	2"1/2	1635	600	730	178	1042	600	641	172	145
ALTI-NEXIS-V1009-2-CE-16-T4-03	2"1/2	1635	600	730	178	1123	600	641	196	169
ALTI-NEXIS-V1010-2-CE-16-T4-03	2"1/2	1635	600	730	178	1161	600	641	198	171
ALTI-NEXIS-V1011-2-CE-16-T4-03	2"1/2	1635	600	730	178	1236	600	641	200	173
ALTI-NEXIS-V1012-2-CE-16-T4-03	2"1/2	1635	600	730	178	1228	600	641	214	187
ALTI-NEXIS-V1013-2-CE-16-T4-03	2"1/2	1485	600	730	178	1303	600	641	214	187
ALTI-NEXIS-V1015-2-CE-16-T4-03	2"1/2	1485	600	730	178	1378	600	641	218	191
ALTI-NEXIS-V1603-2-CE-16-T4-03	2"1/2	1360	600	732	178	867	600	656	167	131
ALTI-NEXIS-V1604-2-CE-16-T4-03	2"1/2	1360	600	732	178	952	600	656	177	142
ALTI-NEXIS-V1605-2-CE-16-T4-03	2"1/2	1635	600	732	178	1046	600	656	193	167
ALTI-NEXIS-V1606-2-CE-16-T4-03	2"1/2	1635	600	732	178	1096	600	656	195	169
ALTI-NEXIS-V1607-2-CE-16-T4-03	2"1/2	1635	600	732	178	1173	600	656	233	207
ALTI-NEXIS-V1608-2-CE-16-T4-03	2"1/2	1635	600	732	178	1223	600	656	237	211
ALTI-NEXIS-V1609/K-2-CE-16-T4-03	2"1/2	1670	1080	732	213	1460	1000	656	287	256
ALTI-NEXIS-V1610/K-2-CE-16-T4-03	2"1/2	1670	1080	732	213	1610	1000	656	291	260
ALTI-NEXIS-V1611/K-2-CE-16-T4-03	2"1/2	1670	1080	732	213	1610	1000	656	293	262
ALTI-NEXIS-V2202/K-2-CE-16-T4-03	3"	1390	1080	955	213	967	1000	850	312	252
ALTI-NEXIS-V2203/K-2-CE-16-T4-03	3"	1390	1080	955	213	1060	1000	850	326	266
ALTI-NEXIS-V2204/K-2-CE-16-T4-03	3"	1657	1080	955	213	1251	1000	850	391	328
ALTI-NEXIS-V2205/K-2-CE-16-T4-03	3"	1657	1080	955	213	1336	1000	850	406	343
ALTI-NEXIS-V2206/K-2-CE-16-T4-03	3"	1517	1080	955	213	1386	1000	850	410	347
ALTI-NEXIS-V2207/K-2-CE-16-T4-03	3"	1517	1080	955	213	1436	1000	850	414	351
ALTI-NEXIS-V2208/K-2-CE-16-T4-03	3"	1517	1080	955	213	1597	1000	850	480	417
ALTI-NEXIS-V3602/1/K-2-CE-16-T4-03	DN100	1657	1080	1288	228	1199	1000	1068	447	384
ALTI-NEXIS-V3602/2/K-2-CE-16-T4-03	DN100	1390	1080	1288	228	1058	1000	1068	384	324
ALTI-NEXIS-V3602/K-2-CE-16-T4-03	DN100	1657	1080	1288	228	1199	1000	1068	447	384
ALTI-NEXIS-V3603/1/K-2-CE-16-T4-03	DN100	1517	1080	1288	228	1301	1000	1068	465	402
ALTI-NEXIS-V3603/2/K-2-CE-16-T4-03	DN100	1517	1080	1288	228	1301	1000	1068	465	402
ALTI-NEXIS-V3603/K-2-CE-16-T4-03	DN100	1517	1080	1288	228	1301	1000	1068	465	402
ALTI-NEXIS-V3604/2/K-2-CE-16-T4-03	DN100	1517	1080	1288	228	1478	1000	1068	537	474
ALTI-NEXIS-V3604/K-2-CE-16-T4-03	DN100	1517	1080	1288	228	1478	1000	1068	537	474
ALTI-NEXIS-V3605/2/K-2-CE-16-T4-03	DN100	1657	1080	1288	228	1545	1000	1068	566	503
ALTI-NEXIS-V3605/K-2-CE-16-T4-03	DN100	1657	1080	1288	228	1542	1000	1068	566	503
ALTI-NEXIS-V3606/2/K-2-CE-16-T4-03	DN100	1657	1080	1288	228	1612	1000	1068	572	509
ALTI-NEXIS-V5202/2/K-2-CE-16-T4-03	DN125	1660	1080	1286	263	1301	1000	1036	494	431
ALTI-NEXIS-V5202/K-2-CE-16-T4-03	DN125	1520	1080	1286	263	1301	1000	1036	508	445
ALTI-NEXIS-V5203/2/K-2-CE-16-T4-03	DN125	1520	1080	1286	263	1512	1000	1036	578	515
ALTI-NEXIS-V5203/K-2-CE-16-T4-03	DN125	1520	1080	1286	263	1512	1000	1036	578	515
ALTI-NEXIS-V5204/2/K-2-CE-16-T4-03	DN125	1660	1080	1286	263	1612	1000	1036	611	548
ALTI-NEXIS-V5204/K-2-CE-16-T4-03	DN125	1660	1080	1286	263	1612	1000	1036	611	548

ALTI-NEXIS V

DIMENSIONS - ALTI-NEXIS V SERIES - CE+ VERSION

TYPE	Ø	H	L	P	H1	H2	X	P1	Mass	
	Pipes	mm	mm	mm	mm	mm	mm	mm	Incl.packaging	Net
3 PUMPS										
ALTI-NEXIS-V403-3-CE-16-T4-03	1"1/2	1370	900	580	138	709	900	532	198	124
ALTI-NEXIS-V404-3-CE-16-T4-03	1"1/2	1370	900	580	138	734	900	532	201	127
ALTI-NEXIS-V406-3-CE-16-T4-03	1"1/2	1370	900	580	138	804	900	532	211	137
ALTI-NEXIS-V407-3-CE-16-T4-03	1"1/2	1370	900	580	138	829	900	532	216	142
ALTI-NEXIS-V409-3-CE-16-T4-03	1"1/2	1370	900	580	138	879	900	532	219	145
ALTI-NEXIS-V410-3-CE-16-T4-03	1"1/2	1370	900	580	138	936	900	532	240	166
ALTI-NEXIS-V412-3-CE-16-T4-03	1"1/2	1495	900	580	138	986	900	532	245	171
ALTI-NEXIS-V414-3-CE-16-T4-03	1"1/2	1495	900	580	138	1036	900	532	258	184
ALTI-NEXIS-V416-3-CE-16-T4-03	1"1/2	1495	900	580	138	1086	900	532	260	186
ALTI-NEXIS-V418-3-CE-16-T4-03	1"1/2	1635	900	580	138	1136	900	532	263	190
ALTI-NEXIS-V603-3-CE-16-T4-03	2"1/2	1370	900	632	138	746	900	555	208	134
ALTI-NEXIS-V604-3-CE-16-T4-03	2"1/2	1370	900	632	138	803	900	555	217	143
ALTI-NEXIS-V605-3-CE-16-T4-03	2"1/2	1370	900	632	138	841	900	555	223	149
ALTI-NEXIS-V606-3-CE-16-T4-03	2"1/2	1370	900	632	138	878	900	555	226	152
ALTI-NEXIS-V607-3-CE-16-T4-03	2"1/2	1370	900	632	138	948	900	555	241	167
ALTI-NEXIS-V608-3-CE-16-T4-03	2"1/2	1495	900	632	138	986	900	555	244	170
ALTI-NEXIS-V609-3-CE-16-T4-03	2"1/2	1495	900	632	138	1023	900	555	253	179
ALTI-NEXIS-V610-3-CE-16-T4-03	2"1/2	1495	900	632	138	1061	900	555	264	190
ALTI-NEXIS-V611-3-CE-16-T4-03	2"1/2	1635	900	632	138	1136	900	555	267	193
ALTI-NEXIS-V612-3-CE-16-T4-03	2"1/2	1635	900	632	138	1171	900	555	279	205
ALTI-NEXIS-V613-3-CE-16-T4-03	2"1/2	1495	900	632	138	1246	900	555	280	206
ALTI-NEXIS-V614-3-CE-16-T4-03	2"1/2	1495	900	632	138	1246	900	555	283	209
ALTI-NEXIS-V615-3-CE-16-T4-03	2"1/2	1495	900	632	138	1321	900	555	288	214
ALTI-NEXIS-V616-3-CE-16-T4-03	2"1/2	1495	900	632	138	1365	900	555	321	247
ALTI-NEXIS-V1002-3-CE-16-T4-03	2"1/2	1370	900	730	178	749	900	641	231	157
ALTI-NEXIS-V1003-3-CE-16-T4-03	2"1/2	1370	900	730	178	787	900	641	237	163
ALTI-NEXIS-V1004-3-CE-16-T4-03	2"1/2	1370	900	730	178	894	900	641	255	181
ALTI-NEXIS-V1005-3-CE-16-T4-03	2"1/2	1370	900	730	178	894	900	641	264	190
ALTI-NEXIS-V1006-3-CE-16-T4-03	2"1/2	1370	900	730	178	932	900	641	267	193
ALTI-NEXIS-V1007-3-CE-16-T4-03	2"1/2	1635	900	730	178	1005	900	641	281	207
ALTI-NEXIS-V1008-3-CE-16-T4-03	2"1/2	1635	900	730	178	1042	900	641	284	210
ALTI-NEXIS-V1009-3-CE-16-T4-03	2"1/2	1635	900	730	178	1123	900	641	320	246
ALTI-NEXIS-V1010-3-CE-16-T4-03	2"1/2	1635	900	730	178	1161	900	641	323	249
ALTI-NEXIS-V1011-3-CE-16-T4-03	2"1/2	1495	900	730	178	1236	900	641	324	250
ALTI-NEXIS-V1012-3-CE-16-T4-03	2"1/2	1495	900	730	178	1228	900	641	345	271
ALTI-NEXIS-V1013-3-CE-16-T4-03	2"1/2	1495	900	730	178	1303	900	641	348	274
ALTI-NEXIS-V1015-3-CE-16-T4-03	2"1/2	1495	900	730	178	1378	900	641	354	280
ALTI-NEXIS-V1603-3-CE-16-T4-03	3"	1370	900	759	178	867	900	670	250	193
ALTI-NEXIS-V1604-3-CE-16-T4-03	3"	1370	900	759	178	952	900	670	265	208
ALTI-NEXIS-V1605-3-CE-16-T4-03	3"	1495	900	759	178	1046	900	670	316	241
ALTI-NEXIS-V1606-3-CE-16-T4-03	3"	1635	900	759	178	1096	900	670	321	246
ALTI-NEXIS-V1607-3-CE-16-T4-03	3"	1635	900	759	178	1173	900	670	378	303
ALTI-NEXIS-V1608-3-CE-16-T4-03	3"	1635	900	759	178	1223	900	670	384	309
ALTI-NEXIS-V1609/K-3-CE-16-T4-03	3"	1230	2080	759	213	1460	1500	670	563	392
ALTI-NEXIS-V1610/K-3-CE-16-T4-03	3"	1230	2080	759	213	1610	1500	670	569	398

DIMENSIONS - ALTI-NEXIS V SERIES - CE+ VERSION

TYPE	Ø	H	L	P	H1	H2	X	P1	Mass	
	Pipes	mm	mm	mm	mm	mm	mm	mm	Incl.packaging	Net
3 PUMPS										
ALTI-NEXIS-V1611/K-3-CE-16-T4-03	3"	1230	2080	759	213	1610	1500	670	572	401
ALTI-NEXIS-V2202/K-3-CE-16-T4-03	DN100	1396	1580	1100	213	967	1500	880	500	406
ALTI-NEXIS-V2203/K-3-CE-16-T4-03	DN100	1523	1580	1100	213	1060	1500	880	521	427
ALTI-NEXIS-V2204/K-3-CE-16-T4-03	DN100	1663	1580	1100	213	1251	1500	880	618	520
ALTI-NEXIS-V2205/K-3-CE-16-T4-03	DN100	1523	1580	1100	213	1336	1500	880	640	542
ALTI-NEXIS-V2206/K-3-CE-16-T4-03	DN100	1523	1580	1100	213	1386	1500	880	646	548
ALTI-NEXIS-V2207/K-3-CE-16-T4-03	DN100	1523	1580	1100	213	1436	1500	880	651	553
ALTI-NEXIS-V2208/K-3-CE-16-T4-03	DN100	1663	1580	1100	213	1597	1500	880	752	654
ALTI-NEXIS-V3602/1/K-3-CE-16-T4-03	DN125	1663	1580	1343	228	1199	1500	1093	669	571
ALTI-NEXIS-V3602/2/K-3-CE-16-T4-03	DN125	1523	1580	1343	228	1058	1500	1093	577	483
ALTI-NEXIS-V3602/K-3-CE-16-T4-03	DN125	1663	1580	1343	228	1199	1500	1093	669	571
ALTI-NEXIS-V3603/1/K-3-CE-16-T4-03	DN125	1523	1580	1343	228	1301	1500	1093	696	598
ALTI-NEXIS-V3603/2/K-3-CE-16-T4-03	DN125	1523	1580	1343	228	1301	1500	1093	696	598
ALTI-NEXIS-V3603/K-3-CE-16-T4-03	DN125	1523	1580	1343	228	1301	1500	1093	696	598
ALTI-NEXIS-V3604/2/K-3-CE-16-T4-03	DN125	1523	1580	1343	228	1478	1500	1093	804	706
ALTI-NEXIS-V3604/K-3-CE-16-T4-03	DN125	1523	1580	1343	228	1478	1500	1093	804	706
ALTI-NEXIS-V3605/2/K-3-CE-16-T4-03	DN125	1705	1580	1343	228	1545	1500	1093	847	749
ALTI-NEXIS-V3605/K-3-CE-16-T4-03	DN125	1705	1580	1343	228	1542	1500	1093	847	749
ALTI-NEXIS-V3606/2/K-3-CE-16-T4-03	DN125	1705	1580	1343	228	1612	1500	1093	856	758
ALTI-NEXIS-V5202/2/K-3-CE-16-T4-03	DN150	1520	1580	1351	263	1301	1500	1066	743	645
ALTI-NEXIS-V5202/K-3-CE-16-T4-03	DN150	1520	1580	1351	263	1301	1500	1066	765	667
ALTI-NEXIS-V5203/2/K-3-CE-16-T4-03	DN150	1520	1580	1351	263	1512	1500	1066	870	772
ALTI-NEXIS-V5203/K-3-CE-16-T4-03	DN150	1520	1580	1351	263	1512	1500	1066	870	772
ALTI-NEXIS-V5204/2/K-3-CE-16-T4-03	DN150	1660	1580	1351	263	1612	1500	1066	919	821
ALTI-NEXIS-V5204/K-3-CE-16-T4-03	DN150	1660	1580	1351	263	1612	1500	1066	919	821
4 PUMPS										
ALTI-NEXIS-V403-4-CE-16-T4-03	2"	1370	1200	605	138	709	1200	545	243	160
ALTI-NEXIS-V404-4-CE-16-T4-03	2"	1370	1200	605	138	734	1200	545	247	164
ALTI-NEXIS-V406-4-CE-16-T4-03	2"	1370	1200	605	138	804	1200	545	261	178
ALTI-NEXIS-V407-4-CE-16-T4-03	2"	1370	1200	605	138	829	1200	545	267	184
ALTI-NEXIS-V409-4-CE-16-T4-03	2"	1370	1200	605	138	879	1200	545	271	188
ALTI-NEXIS-V410-4-CE-16-T4-03	2"	1370	1200	605	138	936	1200	545	300	217
ALTI-NEXIS-V412-4-CE-16-T4-03	2"	1495	1200	605	138	986	1200	545	305	222
ALTI-NEXIS-V414-4-CE-16-T4-03	2"	1495	1200	605	138	1036	1200	545	323	240
ALTI-NEXIS-V416-4-CE-16-T4-03	2"	1495	1200	605	138	1086	1200	545	325	242
ALTI-NEXIS-V418-4-CE-16-T4-03	2"	1635	1200	605	138	1136	1200	545	329	246
ALTI-NEXIS-V603-4-CE-16-T4-03	2"1/2	1370	1200	632	138	746	1200	555	255	172
ALTI-NEXIS-V604-4-CE-16-T4-03	2"1/2	1370	1200	632	138	803	1200	555	267	184
ALTI-NEXIS-V605-4-CE-16-T4-03	2"1/2	1370	1200	632	138	841	1200	555	275	192
ALTI-NEXIS-V606-4-CE-16-T4-03	2"1/2	1370	1200	632	138	878	1200	555	279	196
ALTI-NEXIS-V607-4-CE-16-T4-03	2"1/2	1370	1200	632	138	948	1200	555	299	216
ALTI-NEXIS-V608-4-CE-16-T4-03	2"1/2	1495	1200	632	138	986	1200	555	303	220
ALTI-NEXIS-V609-4-CE-16-T4-03	2"1/2	1495	1200	632	138	1023	1200	555	315	232
ALTI-NEXIS-V610-4-CE-16-T4-03	2"1/2	1495	1200	632	138	1061	1200	555	329	246
ALTI-NEXIS-V611-4-CE-16-T4-03	2"1/2	1635	1200	632	138	1136	1200	555	333	250
ALTI-NEXIS-V612-4-CE-16-T4-03	2"1/2	1635	1200	632	138	1171	1200	555	349	266
ALTI-NEXIS-V613-4-CE-16-T4-03	2"1/2	1495	1200	632	138	1246	1200	555	353	270
ALTI-NEXIS-V614-4-CE-16-T4-03	2"1/2	1495	1200	632	138	1246	1200	555	357	274

ALTI-NEXIS V

DIMENSIONS - ALTI-NEXIS V SERIES - CE+ VERSION

TYPE	Ø	H	L	P	H1	H2	X	P1	Mass	
	Pipes	mm	mm	mm	mm	mm	mm	mm	Incl.packaging	Net
ALTI-NEXIS-V615-4-CE-16-T4-03	2"1/2	1495	1200	632	138	1321	1200	555	363	280
ALTI-NEXIS-V616-4-CE-16-T4-03	2"1/2	1495	1200	632	138	1365	1200	555	407	324
ALTI-NEXIS-V1002-4-CE-16-T4-03	3"	1370	1200	757	178	749	1200	655	289	206
ALTI-NEXIS-V1003-4-CE-16-T4-03	3"	1370	1200	757	178	787	1200	655	297	214
ALTI-NEXIS-V1004-4-CE-16-T4-03	3"	1370	1200	757	178	894	1200	655	321	238
ALTI-NEXIS-V1005-4-CE-16-T4-03	3"	1370	1200	757	178	894	1200	655	333	250
ALTI-NEXIS-V1006-4-CE-16-T4-03	3"	1370	1200	757	178	932	1200	655	337	254
ALTI-NEXIS-V1007-4-CE-16-T4-03	3"	1635	1200	757	178	1005	1200	655	356	273
ALTI-NEXIS-V1008-4-CE-16-T4-03	3"	1635	1200	757	178	1042	1200	655	360	277
ALTI-NEXIS-V1009-4-CE-16-T4-03	3"	1635	1200	757	178	1123	1200	655	408	325
ALTI-NEXIS-V1010-4-CE-16-T4-03	3"	1635	1200	757	178	1161	1200	655	412	329
ALTI-NEXIS-V1011-4-CE-16-T4-03	3"	1495	1200	757	178	1236	1200	655	414	331
ALTI-NEXIS-V1012-4-CE-16-T4-03	3"	1495	1200	757	178	1228	1200	655	442	359
ALTI-NEXIS-V1013-4-CE-16-T4-03	3"	1495	1200	757	178	1303	1200	655	446	363
ALTI-NEXIS-V1015-4-CE-16-T4-03	3"	1495	1200	757	178	1378	1200	655	454	371
ALTI-NEXIS-V1603-4-CE-16-T4-03	DN100	1370	1200	920	178	867	1200	700	351	286
ALTI-NEXIS-V1604-4-CE-16-T4-03	DN100	1370	1200	920	178	952	1200	700	371	306
ALTI-NEXIS-V1605-4-CE-16-T4-03	DN100	1495	1200	920	178	1046	1200	700	434	351
ALTI-NEXIS-V1606-4-CE-16-T4-03	DN100	1635	1200	920	178	1096	1200	700	440	357
ALTI-NEXIS-V1607-4-CE-16-T4-03	DN100	1635	1200	920	178	1173	1200	700	516	433
ALTI-NEXIS-V1608-4-CE-16-T4-03	DN100	1635	1200	920	178	1223	1200	700	524	441
ALTI-NEXIS-V1609/K-4-CE-16-T4-03	DN100	1340	2580	920	213	1460	2000	700	759	561
ALTI-NEXIS-V1610/K-4-CE-16-T4-03	DN100	1340	2580	920	213	1610	2000	700	767	569
ALTI-NEXIS-V1611/K-4-CE-16-T4-03	DN100	1340	2580	920	213	1610	2000	700	771	573
ALTI-NEXIS-V2202/K-4-CE-16-T4-03	DN125	1396	2080	1160	213	967	2000	910	675	545
ALTI-NEXIS-V2203/K-4-CE-16-T4-03	DN125	1523	2080	1160	213	1060	2000	910	703	573
ALTI-NEXIS-V2204/K-4-CE-16-T4-03	DN125	1663	2080	1160	213	1251	2000	910	831	695
ALTI-NEXIS-V2205/K-4-CE-16-T4-03	DN125	1633,5	2080	1160	213	1336	2000	910	866	730
ALTI-NEXIS-V2206/K-4-CE-16-T4-03	DN125	1633,5	2080	1160	213	1386	2000	910	874	738
ALTI-NEXIS-V2207/K-4-CE-16-T4-03	DN125	1633,5	2080	1160	213	1436	2000	910	881	745
ALTI-NEXIS-V2208/K-4-CE-16-T4-03	DN125	1773,5	2080	1160	213	1597	2000	910	1015	879
ALTI-NEXIS-V3602/1/K-4-CE-16-T4-03	DN150	1905	2080	1397	228	1199	2000	1112	901	765
ALTI-NEXIS-V3602/2/K-4-CE-16-T4-03	DN150	1705	2080	1397	228	1058	2000	1112	778	648
ALTI-NEXIS-V3602/K-4-CE-16-T4-03	DN150	1905	2080	1397	228	1199	2000	1112	901	765
ALTI-NEXIS-V3603/1/K-4-CE-16-T4-03	DN150	1633,5	2080	1397	228	1301	2000	1112	941	805
ALTI-NEXIS-V3603/2/K-4-CE-16-T4-03	DN150	1633,5	2080	1397	228	1301	2000	1112	941	805
ALTI-NEXIS-V3603/K-4-CE-16-T4-03	DN150	1633,5	2080	1397	228	1301	2000	1112	941	805
ALTI-NEXIS-V3604/2/K-4-CE-16-T4-03	DN150	1633,5	2080	1397	228	1478	2000	1112	1085	849
ALTI-NEXIS-V3604/K-4-CE-16-T4-03	DN150	1633,5	2080	1397	228	1478	2000	1112	1085	849
ALTI-NEXIS-V3605/2/K-4-CE-16-T4-03	DN150	1773,5	2080	1397	228	1545	2000	1112	1142	1006
ALTI-NEXIS-V3605/K-4-CE-16-T4-03	DN150	1773,5	2080	1397	228	1542	2000	1112	1142	1006
ALTI-NEXIS-V3606/2/K-4-CE-16-T4-03	DN150	1773,5	2080	1397	228	1612	2000	1112	1154	1018
ALTI-NEXIS-V5202/2/K-4-CE-16-T4-03	DN200	1660	2080	1456	263	1301	2000	1116	1002	866
ALTI-NEXIS-V5202/K-4-CE-16-T4-03	DN200	1634	2080	1456	263	1301	2000	1116	1034	898
ALTI-NEXIS-V5203/2/K-4-CE-16-T4-03	DN200	1634	2080	1456	263	1512	2000	1116	1174	1038
ALTI-NEXIS-V5203/K-4-CE-16-T4-03	DN200	1634	2080	1456	263	1512	2000	1116	1174	1038
ALTI-NEXIS-V5204/2/K-4-CE-16-T4-03	DN200	1774	2080	1456	263	1612	2000	1116	1239	1103
ALTI-NEXIS-V5204/K-4-CE-16-T4-03	DN200	1774	2080	1456	263	1612	2000	1116	1239	1103

DIMENSIONS - ALTI-NEXIS V SERIES - SC VERSION

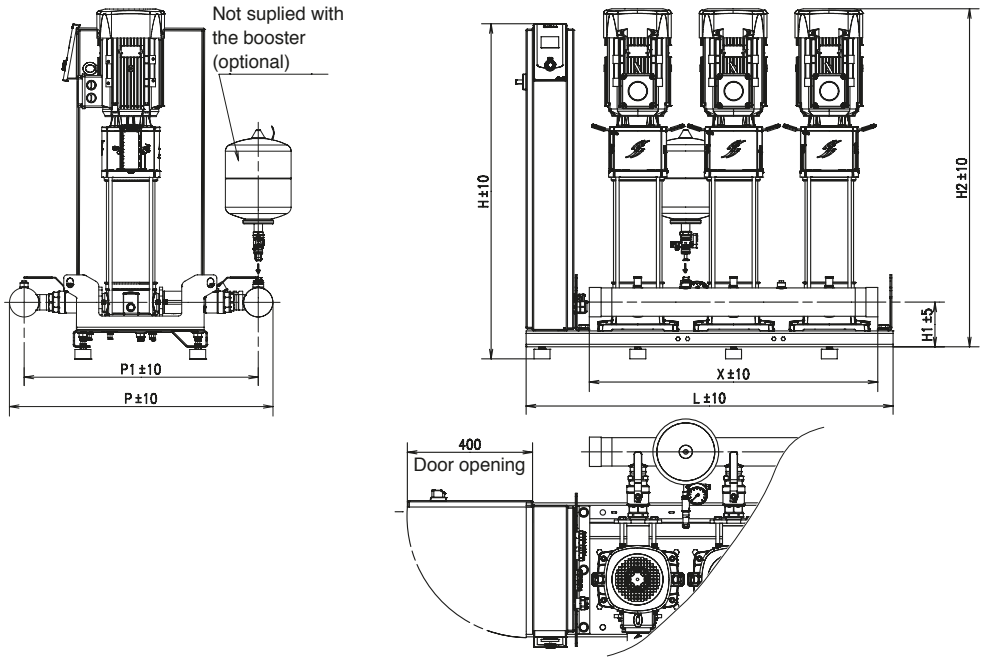

TYPE	Ø	H	L	P	H1	H2	X	P1	Mass	
	Pipes	mm	mm	mm	mm	mm	mm	mm	Incl.packaging	Net
2 PUMPS										
ALTI-NEXIS-V403-2-SC-16-T4	1"1/2	1055	850	610	138	709	600	561	206	132
ALTI-NEXIS-V404-2-SC-16-T4	1"1/2	1055	850	610	138	734	600	561	208	134
ALTI-NEXIS-V406-2-SC-16-T4	1"1/2	1055	850	610	138	804	600	561	214	140
ALTI-NEXIS-V407-2-SC-16-T4	1"1/2	1055	850	610	138	829	600	561	218	144
ALTI-NEXIS-V409-2-SC-16-T4	1"1/2	1055	850	610	138	879	600	561	220	146
ALTI-NEXIS-V410-2-SC-16-T4	1"1/2	1055	850	610	138	936	600	561	230	156
ALTI-NEXIS-V412-2-SC-16-T4	1"1/2	1055	850	610	138	986	600	561	232	158
ALTI-NEXIS-V414-2-SC-16-T4	1"1/2	1055	850	610	138	1036	600	561	240	166
ALTI-NEXIS-V416-2-SC-16-T4	1"1/2	1055	850	610	138	1086	600	561	242	168
ALTI-NEXIS-V418-2-SC-16-T4	1"1/2	1055	850	610	138	1136	600	561	244	170
ALTI-NEXIS-V603-2-SC-16-T4	2"	1055	850	634	138	746	600	573	211	137
ALTI-NEXIS-V604-2-SC-16-T4	2"	1055	850	634	138	803	600	573	217	143
ALTI-NEXIS-V605-2-SC-16-T4	2"	1055	850	634	138	841	600	573	221	147
ALTI-NEXIS-V606-2-SC-16-T4	2"	1055	850	634	138	878	600	573	223	149
ALTI-NEXIS-V607-2-SC-16-T4	2"	1055	850	634	138	948	600	573	233	159
ALTI-NEXIS-V608-2-SC-16-T4	2"	1055	850	634	138	986	600	573	235	161
ALTI-NEXIS-V609-2-SC-16-T4	2"	1055	850	634	138	1023	600	573	241	167
ALTI-NEXIS-V610-2-SC-16-T4	2"	1055	850	634	138	1061	600	573	243	169
ALTI-NEXIS-V611-2-SC-16-T4	2"	1055	850	634	138	1136	600	573	245	171
ALTI-NEXIS-V612-2-SC-16-T4	2"	1055	850	634	138	1171	600	573	253	179
ALTI-NEXIS-V613-2-SC-16-T4	2"	1055	850	634	138	1246	600	573	255	181
ALTI-NEXIS-V614-2-SC-16-T4	2"	1055	850	634	138	1246	600	573	257	183
ALTI-NEXIS-V615-2-SC-16-T4	2"	1055	850	634	138	1321	600	573	259	185
ALTI-NEXIS-V616-2-SC-16-T4	2"	1055	850	634	138	1365	600	573	281	207
ALTI-NEXIS-V1002-2-SC-16-T4	2"1/2	1055	950	796	178	1425	600	720	321	262
ALTI-NEXIS-V1003-2-SC-16-T4	2"1/2	1055	950	796	178	1575	600	720	326	267
ALTI-NEXIS-V1004-2-SC-16-T4	2"1/2	1055	950	796	178	1575	600	720	329	270
ALTI-NEXIS-V1005-2-SC-16-T4	3"	1055	850	1039	178	838	600	950	331	260
ALTI-NEXIS-V1006-2-SC-16-T4	3"	1055	850	1039	178	920	600	950	345	274
ALTI-NEXIS-V1007-2-SC-16-T4	3"	1055	850	1039	178	949	600	950	357	286
ALTI-NEXIS-V1008-2-SC-16-T4	3"	1055	850	1039	178	1086	600	950	412	341
ALTI-NEXIS-V1009-2-SC-16-T4	3"	1055	850	1039	178	1136	600	950	416	345

ALTI-NEXIS V

DIMENSIONS - ALTI-NEXIS V SERIES - SC VERSION

TYPE	Ø	H	L	P	H1	H2	X	P1	Mass	
	Pipes	mm	mm	mm	mm	mm	mm	mm	Incl.packaging	Net
2 PUMPS										
ALTI-NEXIS-V1010-2-SC-16-T4	3"	1055	850	1039	178	1186	600	950	430	359
ALTI-NEXIS-V1011-2-SC-16-T4	3"	1055	850	1039	178	1236	600	950	496	425
ALTI-NEXIS-V1012-2-SC-16-T4	DN100	1055	900	1249	193	923	800	1029	405	330
ALTI-NEXIS-V1013-2-SC-16-T4	DN100	1055	900	1249	193	902	800	1029	415	340
ALTI-NEXIS-V1015-2-SC-16-T4	DN100	1055	900	1249	193	1056	800	1029	476	401
ALTI-NEXIS-V1603-2-SC-16-T4	DN100	1055	900	1249	193	1056	800	1029	486	411
ALTI-NEXIS-V1604-2-SC-16-T4	DN100	1055	900	1249	193	1122	800	1029	562	487
ALTI-NEXIS-V1605-2-SC-16-T4	DN100	1055	900	1249	193	1122	800	1029	562	487
ALTI-NEXIS-V1606-2-SC-16-T4	DN100	1070	1250	1249	208	1464	1000	1029	646	541
ALTI-NEXIS-V1607-2-SC-16-T4	DN100	1070	1250	1249	208	1464	1000	1029	646	541
ALTI-NEXIS-V1608-2-SC-16-T4	DN125	1420	1250	1287	243	1761	1000	1037	810	705
ALTI-NEXIS-V1609/K-2-SC-16-T4	2"1/2	1055	950	796	178	1425	600	720	321	262
ALTI-NEXIS-V1610/K-2-SC-16-T4	2"1/2	1055	950	796	178	1575	600	720	326	267
ALTI-NEXIS-V1611/K-2-SC-16-T4	2"1/2	1055	950	796	178	1575	600	720	329	270
ALTI-NEXIS-V2202-2-SC-16-T4	3"	1055	850	1039	178	838	600	950	331	260
ALTI-NEXIS-V2203-2-SC-16-T4	3"	1055	850	1039	178	920	600	950	345	274
ALTI-NEXIS-V2204-2-SC-16-T4	3"	1055	850	1039	178	949	600	950	357	286
ALTI-NEXIS-V2205-2-SC-16-T4	3"	1055	850	1039	178	1086	600	950	412	341
ALTI-NEXIS-V2206-2-SC-16-T4	3"	1055	850	1039	178	1136	600	950	416	345
ALTI-NEXIS-V2207-2-SC-16-T4	3"	1055	850	1039	178	1186	600	950	430	359
ALTI-NEXIS-V2208-2-SC-16-T4	3"	1055	850	1039	178	1236	600	950	496	425
ALTI-NEXIS-V3602/2-2-SC-16-T4	DN100	1055	900	1249	193	923	800	1029	405	330
ALTI-NEXIS-V3602-2-SC-16-T4	DN100	1055	900	1249	193	902	800	1029	415	340
ALTI-NEXIS-V3603/1-2-SC-16-T4	DN100	1055	900	1249	193	1056	800	1029	476	401
ALTI-NEXIS-V3603-2-SC-16-T4	DN100	1055	900	1249	193	1056	800	1029	486	411
ALTI-NEXIS-V3604/2-2-SC-16-T4	DN100	1055	900	1249	193	1122	800	1029	562	487
ALTI-NEXIS-V3604-2-SC-16-T4	DN100	1055	900	1249	193	1122	800	1029	562	487
ALTI-NEXIS-V3605/2/K-2-SC-16-T4	DN100	1070	1250	1249	208	1464	1000	1029	646	541
ALTI-NEXIS-V3605/K-2-SC-16-T4	DN100	1070	1250	1249	208	1464	1000	1029	646	541
ALTI-NEXIS-V3606/2/K-2-SC-16-T4	DN100	1070	1250	1249	208	1531	1000	1029	654	549
ALTI-NEXIS-V3606/K-2-SC-16-T4	DN100	1420	1250	1249	208	1531	1000	1029	690	585
ALTI-NEXIS-V5202/2-2-SC-16-T4	DN125	1070	1250	1287	243	1014	1000	1037	525	425
ALTI-NEXIS-V5202-2-SC-16-T4	DN125	1070	1250	1287	243	1101	1000	1037	578	478
ALTI-NEXIS-V5203/2-2-SC-16-T4	DN125	1070	1250	1287	243	1201	1000	1037	662	562
ALTI-NEXIS-V5203-2-SC-16-T4	DN125	1070	1250	1287	243	1201	1000	1037	662	562
ALTI-NEXIS-V5204/2/K-2-SC-16-T4	DN125	1070	1250	1287	243	1561	1000	1037	711	606
ALTI-NEXIS-V5204/K-2-SC-16-T4	DN125	1070	1250	1287	243	1561	1000	1037	711	606
ALTI-NEXIS-V5205/2/K-2-SC-16-T4	DN125	1420	1250	1287	243	1661	1000	1037	760	655
ALTI-NEXIS-V5205/K-2-SC-16-T4	DN125	1420	1250	1287	243	1661	1000	1037	760	655
ALTI-NEXIS-V5206/2/K-2-SC-16-T4	DN125	1420	1250	1287	243	1761	1000	1037	810	705
3 PUMPS										
ALTI-NEXIS-V403-3-SC-16-T4	1"1/2	1055	1150	610	138	709	900	561	254	172
ALTI-NEXIS-V404-3-SC-16-T4	1"1/2	1055	1150	610	138	734	900	561	257	175
ALTI-NEXIS-V406-3-SC-16-T4	1"1/2	1055	1150	610	138	804	900	561	267	185
ALTI-NEXIS-V407-3-SC-16-T4	1"1/2	1055	1150	610	138	829	900	561	272	190
ALTI-NEXIS-V409-3-SC-16-T4	1"1/2	1055	1150	610	138	879	900	561	275	193
ALTI-NEXIS-V410-3-SC-16-T4	1"1/2	1055	1150	610	138	936	900	561	290	208
ALTI-NEXIS-V412-3-SC-16-T4	1"1/2	1055	1150	610	138	986	900	561	293	211
ALTI-NEXIS-V414-3-SC-16-T4	1"1/2	1055	1150	610	138	1036	900	561	306	224
ALTI-NEXIS-V416-3-SC-16-T4	1"1/2	1055	1150	610	138	1086	900	561	308	226
ALTI-NEXIS-V418-3-SC-16-T4	1"1/2	1055	1150	610	138	1136	900	561	319	236
ALTI-NEXIS-V603-3-SC-16-T4	2"1/2	1055	1150	665	138	746	900	589	264	181
ALTI-NEXIS-V604-3-SC-16-T4	2"1/2	1055	1150	665	138	803	900	589	273	190,
ALTI-NEXIS-V605-3-SC-16-T4	2"1/2	1055	1150	665	138	841	900	589	279	196
ALTI-NEXIS-V606-3-SC-16-T4	2"1/2	1055	1150	665	138	878	900	589	282	199
ALTI-NEXIS-V607-3-SC-16-T4	2"1/2	1055	1150	665	138	948	900	589	297	214
ALTI-NEXIS-V608-3-SC-16-T4	2"1/2	1055	1150	665	138	986	900	589	300	217
ALTI-NEXIS-V609-3-SC-16-T4	2"1/2	1055	1150	665	138	1023	900	589	309	226
ALTI-NEXIS-V610-3-SC-16-T4	2"1/2	1055	1150	665	138	1061	900	589	312	229
ALTI-NEXIS-V611-3-SC-16-T4	2"1/2	1055	1150	665	138	1136	900	589	315	232
ALTI-NEXIS-V612-3-SC-16-T4	2"1/2	1055	1150	665	138	1171	900	589	327	245
ALTI-NEXIS-V613-3-SC-16-T4	2"1/2	1055	1150	665	138	1246	900	589	330	248
ALTI-NEXIS-V614-3-SC-16-T4	2"1/2	1055	1150	665	138	1246	900	589	333	250
ALTI-NEXIS-V615-3-SC-16-T4	2"1/2	1055	1150	665	138	1321	900	589	336	254
ALTI-NEXIS-V616-3-SC-16-T4	2"1/2	1055	1150	665	138	1365	900	589	369	287

DIMENSIONS - ALTI-NEXIS V SERIES - SC VERSION

TYPE	Ø	H	L	P	H1	H2	X	P1	Mass	
	Pipes	mm	mm	mm	mm	mm	mm	mm	Incl.packaging	Net
3 PUMPS										
ALTI-NEXIS-V1002-3-SC-16-T4	2"1/2	1055	1150	780	168	749	900	704	283	201
ALTI-NEXIS-V1003-3-SC-16-T4	2"1/2	1055	1150	780	168	787	900	704	290	207
ALTI-NEXIS-V1004-3-SC-16-T4	2"1/2	1055	1150	780	168	857	900	704	308	225
ALTI-NEXIS-V1005-3-SC-16-T4	2"1/2	1055	1150	780	168	894	900	704	316	234
ALTI-NEXIS-V1006-3-SC-16-T4	2"1/2	1055	1150	780	168	932	900	704	319	237
ALTI-NEXIS-V1007-3-SC-16-T4	2"1/2	1055	1150	780	168	1005	900	704	332	249
ALTI-NEXIS-V1008-3-SC-16-T4	2"1/2	1055	1150	780	168	1042	900	704	335	252
ALTI-NEXIS-V1009-3-SC-16-T4	2"1/2	1055	1150	780	168	1123	900	704	371	288
ALTI-NEXIS-V1010-3-SC-16-T4	2"1/2	1055	1150	780	168	1161	900	704	374	291
ALTI-NEXIS-V1011-3-SC-16-T4	2"1/2	1055	1150	780	168	1236	900	704	377	294
ALTI-NEXIS-V1012-3-SC-16-T4	2"1/2	1055	1150	780	168	1228	900	704	398	316
ALTI-NEXIS-V1013-3-SC-16-T4	2"1/2	1055	1150	780	168	1303	900	704	401	319
ALTI-NEXIS-V1015-3-SC-16-T4	2"1/2	1055	1150	780	168	1378	900	704	407	325
ALTI-NEXIS-V1603-3-SC-16-T4	3"	1055	1150	824	178	867	900	735	472	389
ALTI-NEXIS-V1604-3-SC-16-T4	3"	1055	1150	824	178	952	900	735	478	396
ALTI-NEXIS-V1605-3-SC-16-T4	3"	1055	1150	824	178	1046	900	735	481	399
ALTI-NEXIS-V1606-3-SC-16-T4	3"	1055	1150	824	178	1096	900	735	322	240
ALTI-NEXIS-V1607-3-SC-16-T4	3"	1055	1150	824	178	1138	900	735	338	255
ALTI-NEXIS-V1608-3-SC-16-T4	3"	1055	1150	824	178	1188	900	735	371	288
ALTI-NEXIS-V1609/K-3-SC-16-T4	3"	1055	1250	824	178	1425	900	735	435	369
ALTI-NEXIS-V1610/K-3-SC-16-T4	3"	1055	1250	824	178	1575	900	735	442	376
ALTI-NEXIS-V1611/K-3-SC-16-T4	3"	1055	1250	824	178	1575	900	735	446	380
ALTI-NEXIS-V2202-3-SC-16-T4	DN100	1055	1150	1195	178	838	900	950	453	382
ALTI-NEXIS-V2203-3-SC-16-T4	DN100	1055	1150	1195	178	920	900	950	474	403
ALTI-NEXIS-V2204-3-SC-16-T4	DN100	1055	1150	1195	178	949	900	950	492	421
ALTI-NEXIS-V2205-3-SC-16-T4	DN100	1055	1150	1195	178	1086	900	950	574	503
ALTI-NEXIS-V2206-3-SC-16-T4	DN100	1055	1150	1195	178	1136	900	950	580	509
ALTI-NEXIS-V2207-3-SC-16-T4	DN100	1405	1250	1195	178	1186	900	950	622	551
ALTI-NEXIS-V2208-3-SC-16-T4	DN100	1405	1250	1195	178	1236	900	950	721	650
ALTI-NEXIS-V3602/2-3-SC-16-T4	DN125	1055	1200	1306	193	923	1100	1056	580	480
ALTI-NEXIS-V3602-3-SC-16-T4	DN125	1055	1200	1306	193	902	1100	1056	595	495
ALTI-NEXIS-V3603/1-3-SC-16-T4	DN125	1055	1200	1306	193	1056	1100	1056	686	586
ALTI-NEXIS-V3603-3-SC-16-T4	DN125	1405	1300	1306	193	1056	1100	1056	717	617
ALTI-NEXIS-V3604/2-3-SC-16-T4	DN125	1405	1300	1306	193	1122	1100	1056	831	731
ALTI-NEXIS-V3604-3-SC-16-T4	DN125	1405	1300	1306	193	1122	1100	1056	831	731
ALTI-NEXIS-V3605/2/K-3-SC-16-T4	DN125	1420	1750	1306	208	1464	1500	1056	966	816
ALTI-NEXIS-V3605/K-3-SC-16-T4	DN125	1420	1750	1306	208	1464	1500	1056	966	816
ALTI-NEXIS-V3606/2/K-3-SC-16-T4	DN125	1420	1750	1306	208	1531	1500	1056	978	828
ALTI-NEXIS-V3606/K-3-SC-16-T4	DN125	1900*	1580	1306	228	1531	1500	1056	1050	945
ALTI-NEXIS-V5202/2-3-SC-16-T4	DN150	1070	1750	1349	243	1014	1500	1064	753	613
ALTI-NEXIS-V5202-3-SC-16-T4	DN150	1070	1750	1349	243	1101	1500	1064	832	692
ALTI-NEXIS-V5203/2-3-SC-16-T4	DN150	1420	1750	1349	243	1201	1500	1064	977	837
ALTI-NEXIS-V5203-3-SC-16-T4	DN150	1420	1750	1349	243	1201	1500	1064	977	837
ALTI-NEXIS-V5204/2/K-3-SC-16-T4	DN150	1420	1750	1349	243	1561	1500	1064	1053	903
ALTI-NEXIS-V5204/K-3-SC-16-T4	DN150	1420	1750	1349	243	1561	1500	1064	1053	903
ALTI-NEXIS-V5205/2/K-3-SC-16-T4	DN150	1900*	1580	1349	263	1681	1500	1064	1191	1041
ALTI-NEXIS-V5205/K-3-SC-16-T4	DN150	1900*	1580	1349	263	1681	1500	1064	1191	1041
ALTI-NEXIS-V5206/2/K-3-SC-16-T4	DN150	1900*	1580	1349	263	1781	1500	1064	1266	1116
4 PUMPS										
ALTI-NEXIS-V403-4-SC-16-T4	2"	1055	1450	634	138	709	1200	573	355	212
ALTI-NEXIS-V404-4-SC-16-T4	2"	1055	1450	634	138	734	1200	573	359	216
ALTI-NEXIS-V406-4-SC-16-T4	2"	1055	1450	634	138	804	1200	573	373	230
ALTI-NEXIS-V407-4-SC-16-T4	2"	1055	1450	634	138	829	1200	573	379	236
ALTI-NEXIS-V409-4-SC-16-T4	2"	1055	1450	634	138	879	1200	573	383	240
ALTI-NEXIS-V410-4-SC-16-T4	2"	1055	1450	634	138	936	1200	573	403	260
ALTI-NEXIS-V412-4-SC-16-T4	2"	1055	1450	634	138	986	1200	573	407	264
ALTI-NEXIS-V414-4-SC-16-T4	2"	1055	1450	634	138	1036	1200	573	425	282
ALTI-NEXIS-V416-4-SC-16-T4	2"	1055	1450	634	138	1086	1200	573	427	284
ALTI-NEXIS-V418-4-SC-16-T4	2"	1055	1450	634	138	1136	1200	573	431	288
ALTI-NEXIS-V603-4-SC-16-T4	2"1/2	1055	1450	665	138	746	1200	589	367	224

ALTI-NEXIS V

DIMENSIONS - ALTI-NEXIS V SERIES - SC VERSION

TYPE	Ø	H	L	P	H1	H2	X	P1	Mass	
	Pipes	mm	mm	mm	mm	mm	mm	mm	Incl.packaging	Net
4 PUMPS										
ALTI-NEXIS-V603-4-SC-16-T4	2"1/2	1055	1450	665	138	746	1200	589	367	224
ALTI-NEXIS-V604-4-SC-16-T4	2"1/2	1055	1450	665	138	803	1200	589	379	236
ALTI-NEXIS-V605-4-SC-16-T4	2"1/2	1055	1450	665	138	841	1200	589	387	244
ALTI-NEXIS-V606-4-SC-16-T4	2"1/2	1055	1450	665	138	878	1200	589	391	248
ALTI-NEXIS-V607-4-SC-16-T4	2"1/2	1055	1450	665	138	948	1200	589	411	268
ALTI-NEXIS-V608-4-SC-16-T4	2"1/2	1055	1450	665	138	986	1200	589	415	272
ALTI-NEXIS-V609-4-SC-16-T4	2"1/2	1055	1450	665	138	1023	1200	589	427	284
ALTI-NEXIS-V610-4-SC-16-T4	2"1/2	1055	1450	665	138	1061	1200	589	431	288
ALTI-NEXIS-V611-4-SC-16-T4	2"1/2	1055	1450	665	138	1136	1200	589	435	292
ALTI-NEXIS-V612-4-SC-16-T4	2"1/2	1055	1450	665	138	1171	1200	589	452	309
ALTI-NEXIS-V613-4-SC-16-T4	2"1/2	1055	1450	665	138	1246	1200	589	456	313
ALTI-NEXIS-V614-4-SC-16-T4	2"1/2	1055	1450	665	138	1246	1200	589	460	317
ALTI-NEXIS-V615-4-SC-16-T4	2"1/2	1055	1450	665	138	1321	1200	589	464	321
ALTI-NEXIS-V616-4-SC-16-T4	2"1/2	1055	1450	665	138	1365	1200	589	508	365
ALTI-NEXIS-V1002-4-SC-16-T4	3"	1055	1450	806	168	749	1200	717	395	253
ALTI-NEXIS-V1003-4-SC-16-T4	3"	1055	1450	806	168	787	1200	717	403	261
ALTI-NEXIS-V1004-4-SC-16-T4	3"	1055	1450	806	168	857	1200	717	427	285
ALTI-NEXIS-V1005-4-SC-16-T4	3"	1055	1450	806	168	894	1200	717	439	297
ALTI-NEXIS-V1006-4-SC-16-T4	3"	1055	1450	806	168	932	1200	717	443	301
ALTI-NEXIS-V1007-4-SC-16-T4	3"	1055	1450	806	168	1005	1200	717	460	317
ALTI-NEXIS-V1008-4-SC-16-T4	3"	1055	1450	806	168	1042	1200	717	464	321
ALTI-NEXIS-V1009-4-SC-16-T4	3"	1055	1450	806	168	1123	1200	717	512	370
ALTI-NEXIS-V1010-4-SC-16-T4	3"	1055	1450	806	168	1161	1200	717	516	374
ALTI-NEXIS-V1011-4-SC-16-T4	3"	1055	1450	806	168	1236	1200	717	520	378
ALTI-NEXIS-V1012-4-SC-16-T4	3"	1055	1450	806	168	1228	1200	717	549	406
ALTI-NEXIS-V1013-4-SC-16-T4	3"	1055	1450	806	168	1303	1200	717	553	410
ALTI-NEXIS-V1015-4-SC-16-T4	3"	1055	1450	806	168	1378	1200	717	561	418
ALTI-NEXIS-V1603-4-SC-16-T4	DN100	1055	1450	986	178	867	1200	766	544	402
ALTI-NEXIS-V1604-4-SC-16-T4	DN100	1055	1450	986	178	952	1200	766	621	478
ALTI-NEXIS-V1605-4-SC-16-T4	DN100	1055	1450	986	178	1046	1200	766	629	487
ALTI-NEXIS-V1606-4-SC-16-T4	DN100	1055	1450	986	178	1096	1200	766	677	535
ALTI-NEXIS-V1607-4-SC-16-T4	DN100	1055	1450	986	178	1138	1200	766	686	543
ALTI-NEXIS-V1608-4-SC-16-T4	DN100	1055	1450	986	178	1188	1200	766	690	547
ALTI-NEXIS-V1609/K-4-SC-16-T4	DN100	1055	1550	986	178	1425	1200	766	625	506
ALTI-NEXIS-V1610/K-4-SC-16-T4	DN100	1055	1550	986	178	1575	1200	766	634	515
ALTI-NEXIS-V1611/K-4-SC-16-T4	DN100	1055	1550	986	178	1575	1200	766	639	520
ALTI-NEXIS-V2202-4-SC-16-T4	DN125	1055	1450	1257	178	838	1200	1007	606	506
ALTI-NEXIS-V2203-4-SC-16-T4	DN125	1055	1450	1257	178	920	1200	1007	634	534
ALTI-NEXIS-V2204-4-SC-16-T4	DN125	1055	1450	1257	178	949	1200	1007	659	559
ALTI-NEXIS-V2205-4-SC-16-T4	DN125	1055	1450	1257	178	1086	1200	1007	768	668
ALTI-NEXIS-V2206-4-SC-16-T4	DN125	1055	1450	1257	178	1136	1200	1007	776	676
ALTI-NEXIS-V2207-4-SC-16-T4	DN125	1405	1550	1257	178	1186	1200	1007	824	724
ALTI-NEXIS-V2208-4-SC-16-T4	DN125	1405	1550	1257	178	1236	1200	1007	957	857
ALTI-NEXIS-V3602/2-4-SC-16-T4	DN150	1055	1500	1372	193	923	1400	1087	727	627
ALTI-NEXIS-V3602-4-SC-16-T4	DN150	1055	1500	1372	193	902	1400	1087	747	647
ALTI-NEXIS-V3603/1-4-SC-16-T4	DN150	1055	1500	1372	193	1056	1400	1087	868	768
ALTI-NEXIS-V3603-4-SC-16-T4	DN150	1405	1600	1372	193	1056	1400	1087	909	809
ALTI-NEXIS-V3604/2-4-SC-16-T4	DN150	1405	1600	1372	193	1122	1400	1087	1062	962
ALTI-NEXIS-V3604-4-SC-16-T4	DN150	1405	1600	1372	193	1122	1400	1087	1062	962
ALTI-NEXIS-V3605/2/K-4-SC-16-T4	DN150	1420	2250	1372	208	1464	2000	1087	1225	1075
ALTI-NEXIS-V3605/K-4-SC-16-T4	DN150	1420	2250	1372	208	1464	2000	1087	1225	1075
ALTI-NEXIS-V3606/2/K-4-SC-16-T4	DN150	1420	2250	1372	208	1531	2000	1087	1241	1091
ALTI-NEXIS-V3606/K-4-SC-16-T4	DN150	1900*	2080	1372	228	1551	2000	1087	1375	1225
ALTI-NEXIS-V5202/2-4-SC-16-T4	DN200	1070	2250	1455	243	1014	2000	1115	1038	808
ALTI-NEXIS-V5202-4-SC-16-T4	DN200	1070	2250	1455	243	1101	2000	1115	1143	913
ALTI-NEXIS-V5203/2-4-SC-16-T4	DN200	1420	2250	1455	243	1201	2000	1115	1330	1100
ALTI-NEXIS-V5203-4-SC-16-T4	DN200	1420	2250	1455	243	1201	2000	1115	1330	1100
ALTI-NEXIS-V5204/2/K-4-SC-16-T4	DN200	1420	2250	1455	243	1561	2000	1115	1417	1187
ALTI-NEXIS-V5204/K-4-SC-16-T4	DN200	1420	2250	1455	243	1561	2000	1115	1417	1187
ALTI-NEXIS-V5205/2/K-4-SC-16-T4	DN200	1900*	2080	1455	263	1681	2000	1115	1579	1349
ALTI-NEXIS-V5205/K-4-SC-16-T4	DN200	1900*	2080	1455	263	1681	2000	1115	1579	1349
ALTI-NEXIS-V5206/2/K-4-SC-16-T4	DN200	1900*	2080	1455	263	1781	2000	1115	1679	1449

DIMENSIONS - ALTI-NEXIS V SERIES - SCFC VERSION

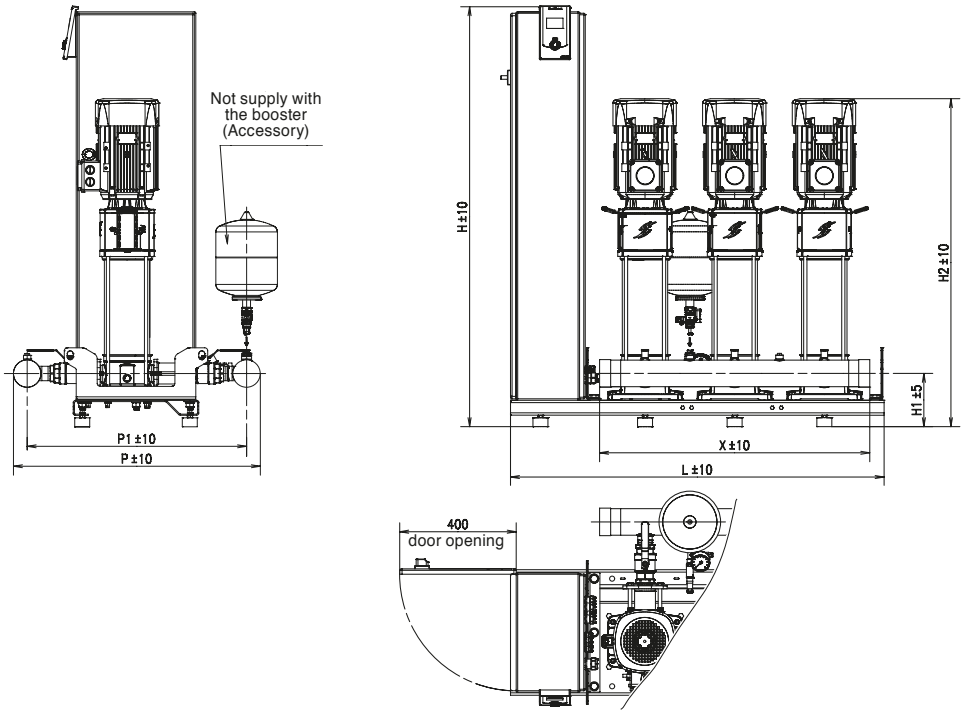

TYPE	Ø	H	L	P	H1	H2	X	P1	Mass	
	Pipes	mm	mm	mm	mm	mm	mm	mm	Incl.packaging	Net
2 PUMPS										
ALTI-NEXIS-V403-2-SC-16-T4-FC	1"1/2	1405	950	610	138	709	600	561	229	155
ALTI-NEXIS-V404-2-SC-16-T4-FC	1"1/2	1405	950	610	138	734	600	561	231	157
ALTI-NEXIS-V406-2-SC-16-T4-FC	1"1/2	1405	950	610	138	804	600	561	237	163
ALTI-NEXIS-V407-2-SC-16-T4-FC	1"1/2	1405	950	610	138	829	600	561	241	167
ALTI-NEXIS-V409-2-SC-16-T4-FC	1"1/2	1405	950	610	138	879	600	561	243	169
ALTI-NEXIS-V410-2-SC-16-T4-FC	1"1/2	1405	950	610	138	936	600	561	252	178
ALTI-NEXIS-V412-2-SC-16-T4-FC	1"1/2	1405	950	610	138	986	600	561	254	180
ALTI-NEXIS-V414-2-SC-16-T4-FC	1"1/2	1405	950	610	138	1036	600	561	266	192
ALTI-NEXIS-V416-2-SC-16-T4-FC	1"1/2	1405	950	610	138	1086	600	561	268	194
ALTI-NEXIS-V418-2-SC-16-T4-FC	1"1/2	1405	950	610	138	1136	600	561	270	196
ALTI-NEXIS-V603-2-SC-16-T4-FC	2"	1405	950	634	138	746	600	573	234	160
ALTI-NEXIS-V604-2-SC-16-T4-FC	2"	1405	950	634	138	803	600	573	240	166
ALTI-NEXIS-V605-2-SC-16-T4-FC	2"	1405	950	634	138	841	600	573	244	170
ALTI-NEXIS-V606-2-SC-16-T4-FC	2"	1405	950	634	138	878	600	573	246	172
ALTI-NEXIS-V607-2-SC-16-T4-FC	2"	1405	950	634	138	948	600	573	254	181
ALTI-NEXIS-V608-2-SC-16-T4-FC	2"	1405	950	634	138	986	600	573	257	183
ALTI-NEXIS-V609-2-SC-16-T4-FC	2"	1405	950	634	138	1023	600	573	266	192
ALTI-NEXIS-V610-2-SC-16-T4-FC	2"	1405	950	634	138	1061	600	573	268	194
ALTI-NEXIS-V611-2-SC-16-T4-FC	2"	1405	950	634	138	1136	600	573	270	196
ALTI-NEXIS-V612-2-SC-16-T4-FC	2"	1405	950	634	138	1171	600	573	276	202
ALTI-NEXIS-V613-2-SC-16-T4-FC	2"	1405	950	634	138	1246	600	573	278	204
ALTI-NEXIS-V614-2-SC-16-T4-FC	2"	1405	950	634	138	1246	600	573	280	206
ALTI-NEXIS-V615-2-SC-16-T4-FC	2"	1405	950	634	138	1321	600	573	282	208
ALTI-NEXIS-V616-2-SC-16-T4-FC	2"	1405	950	634	138	1365	600	573	304	230

ALTI-NEXIS V

DIMENSIONS - ALTI-NEXIS V SERIES - SCFC VERSION

TYPE	Ø	H	L	P	H1	H2	X	P1	Mass	
	Pipes	mm	mm	mm	mm	mm	mm	mm	Incl.packaging	Net
2 PUMPS										
ALTI-NEXIS-V1002-2-SC-16-T4-FC	2"1/2	1405	950	780	168	749	600	704	248	174
ALTI-NEXIS-V1003-2-SC-16-T4-FC	2"1/2	1405	950	780	168	787	600	704	252	178
ALTI-NEXIS-V1004-2-SC-16-T4-FC	2"1/2	1405	950	780	168	857	600	704	263	189
ALTI-NEXIS-V1005-2-SC-16-T4-FC	2"1/2	1405	950	780	168	894	600	704	273	199
ALTI-NEXIS-V1006-2-SC-16-T4-FC	2"1/2	1405	950	780	168	932	600	704	275	201
ALTI-NEXIS-V1007-2-SC-16-T4-FC	2"1/2	1405	950	780	168	1005	600	704	281	207
ALTI-NEXIS-V1008-2-SC-16-T4-FC	2"1/2	1405	950	780	168	1042	600	704	283	209
ALTI-NEXIS-V1009-2-SC-16-T4-FC	2"1/2	1405	950	780	168	1123	600	704	307	233
ALTI-NEXIS-V1010-2-SC-16-T4-FC	2"1/2	1405	950	780	168	1161	600	704	309	235
ALTI-NEXIS-V1011-2-SC-16-T4-FC	2"1/2	1405	950	780	168	1236	600	704	311	237
ALTI-NEXIS-V1012-2-SC-16-T4-FC	2"1/2	1405	950	780	168	1228	600	704	431	357
ALTI-NEXIS-V1013-2-SC-16-T4-FC	2"1/2	1405	950	780	168	1303	600	704	433	359
ALTI-NEXIS-V1015-2-SC-16-T4-FC	2"1/2	1405	950	780	168	1378	600	704	437	363
ALTI-NEXIS-V1603-2-SC-16-T4-FC	2"1/2	1405	950	796	178	867	600	720	275	201
ALTI-NEXIS-V1604-2-SC-16-T4-FC	2"1/2	1405	950	796	178	952	600	720	283	209
ALTI-NEXIS-V1605-2-SC-16-T4-FC	2"1/2	1405	950	796	178	1046	600	720	305	231
ALTI-NEXIS-V1606-2-SC-16-T4-FC	2"1/2	1405	950	796	178	1096	600	720	307	233
ALTI-NEXIS-V1607-2-SC-16-T4-FC	2"1/2	1405	950	796	178	1138	600	720	451	377
ALTI-NEXIS-V1608-2-SC-16-T4-FC	2"1/2	1405	950	796	178	1188	600	720	455	381
ALTI-NEXIS-V1609/K-2-SC-16-T4-FC	2"1/2	1405	950	796	178	1425	600	720	356	297
ALTI-NEXIS-V1610/K-2-SC-16-T4-FC	2"1/2	1405	950	796	178	1575	600	720	361	302
ALTI-NEXIS-V1611/K-2-SC-16-T4-FC	2"1/2	1405	950	796	178	1575	600	720	364	305
ALTI-NEXIS-V2202-2-SC-16-T4-FC	3"	1405	950	1039	178	838	600	950	364	293
ALTI-NEXIS-V2203-2-SC-16-T4-FC	3"	1405	950	1039	178	920	600	950	380	309
ALTI-NEXIS-V2204-2-SC-16-T4-FC	3"	1405	950	1039	178	949	600	950	396	325
ALTI-NEXIS-V2205-2-SC-16-T4-FC	3"	1405	950	1039	178	1086	600	950	450	379
ALTI-NEXIS-V2206-2-SC-16-T4-FC	3"	1405	950	1039	178	1136	600	950	454	383
ALTI-NEXIS-V2207-2-SC-16-T4-FC	3"	1900*	600	1039	178	1186	600	950	578	507
ALTI-NEXIS-V2208-2-SC-16-T4-FC	3"	1900*	600	1039	178	1236	600	950	645	574
ALTI-NEXIS-V3602/2-2-SC-16-T4-FC	DN100	1405	1000	1249	193	923	800	1029	440	365
ALTI-NEXIS-V3602-2-SC-16-T4-FC	DN100	1405	1000	1249	193	902	800	1029	454	379
ALTI-NEXIS-V3603/1-2-SC-16-T4-FC	DN100	1405	1000	1249	193	1056	800	1029	514	439
ALTI-NEXIS-V3603-2-SC-16-T4-FC	DN100	1900*	600	1249	193	1056	800	1029	634	559
ALTI-NEXIS-V3604/2-2-SC-16-T4-FC	DN100	1900*	600	1249	193	1122	800	1029	711	636
ALTI-NEXIS-V3604-2-SC-16-T4-FC	DN100	1900*	600	1249	193	1122	800	1029	711	636
ALTI-NEXIS-V3605/2/K-2-SC-16-T4-FC	DN100	1900*	1080	1249	228	1484	1000	1029	784	709
ALTI-NEXIS-V3605/K-2-SC-16-T4-FC	DN100	1900*	1080	1249	228	1484	1000	1029	784	709
ALTI-NEXIS-V3606/2/K-2-SC-16-T4-FC	DN100	1900*	1080	1249	228	1551	1000	1029	792	717
ALTI-NEXIS-V3606/K-2-SC-16-T4-FC	DN100	1900*	1080	1249	228	1551	1000	1029	836	761
ALTI-NEXIS-V5202/2-2-SC-16-T4-FC	DN125	1420	1250	1287	243	1014	1000	1037	562	462
ALTI-NEXIS-V5202-2-SC-16-T4-FC	DN125	1420	1250	1287	243	1101	1000	1037	614	514
ALTI-NEXIS-V5203/2-2-SC-16-T4-FC	DN125	1900*	1080	1287	263	1221	1000	1037	825	725
ALTI-NEXIS-V5203-2-SC-16-T4-FC	DN125	1900*	1080	1287	263	1221	1000	1037	825	725
ALTI-NEXIS-V5204/2/K-2-SC-16-T4-FC	DN125	1900*	1080	1287	263	1581	1000	1037	878	773
ALTI-NEXIS-V5204/K-2-SC-16-T4-FC	DN125	1900*	1080	1287	263	1581	1000	1037	878	773
ALTI-NEXIS-V5205/2/K-2-SC-16-T4-FC	DN125	1900*	1080	1287	263	1681	1000	1037	936	831
ALTI-NEXIS-V5205/K-2-SC-16-T4-FC	DN125	1900*	1080	1287	263	1681	1000	1037	936	831
ALTI-NEXIS-V5206/2/K-2-SC-16-T4-FC	DN125	1900*	1080	1287	263	1781	1000	1037	1015	910
3 PUMPS										
ALTI-NEXIS-V403-3-SC-16-T4-FC	1"1/2	1405	1250	610	138	709	900	561	278	196
ALTI-NEXIS-V404-3-SC-16-T4-FC	1"1/2	1405	1250	610	138	734	900	561	281	199
ALTI-NEXIS-V406-3-SC-16-T4-FC	1"1/2	1405	1250	610	138	804	900	561	291	209
ALTI-NEXIS-V407-3-SC-16-T4-FC	1"1/2	1405	1250	610	138	829	900	561	296	214
ALTI-NEXIS-V409-3-SC-16-T4-FC	1"1/2	1405	1250	610	138	879	900	561	299	217
ALTI-NEXIS-V410-3-SC-16-T4-FC	1"1/2	1405	1250	610	138	936	900	561	314	231
ALTI-NEXIS-V412-3-SC-16-T4-FC	1"1/2	1405	1250	610	138	986	900	561	317	234
ALTI-NEXIS-V414-3-SC-16-T4-FC	1"1/2	1405	1250	610	138	1036	900	561	333	251
ALTI-NEXIS-V416-3-SC-16-T4-FC	1"1/2	1405	1250	610	138	1086	900	561	335	252
ALTI-NEXIS-V418-3-SC-16-T4-FC	1"1/2	1405	1250	610	138	1136	900	561	345	263

DIMENSIONS - ALTI-NEXIS V SERIES - SCFC VERSION

TYPE	Ø	H	L	P	H1	H2	X	P1	Mass	
	Pipes	mm	mm	mm	mm	mm	mm	mm	Incl.packaging	Net
3 PUMPS										
ALTI-NEXIS-V603-3-SC-16-T4-FC	2"1/2	1405	1250	665	138	746	900	589	288	205
ALTI-NEXIS-V604-3-SC-16-T4-FC	2"1/2	1405	1250	665	138	803	900	589	297	214
ALTI-NEXIS-V605-3-SC-16-T4-FC	2"1/2	1405	1250	665	138	841	900	589	303	220
ALTI-NEXIS-V606-3-SC-16-T4-FC	2"1/2	1405	1250	665	138	878	900	589	306	223
ALTI-NEXIS-V607-3-SC-16-T4-FC	2"1/2	1405	1250	665	138	948	900	589	320	238
ALTI-NEXIS-V608-3-SC-16-T4-FC	2"1/2	1405	1250	665	138	986	900	589	323	241
ALTI-NEXIS-V609-3-SC-16-T4-FC	2"1/2	1405	1250	665	138	1023	900	589	336	253
ALTI-NEXIS-V610-3-SC-16-T4-FC	2"1/2	1405	1250	665	138	1061	900	589	339	256
ALTI-NEXIS-V611-3-SC-16-T4-FC	2"1/2	1405	1250	665	138	1136	900	589	342	259
ALTI-NEXIS-V612-3-SC-16-T4-FC	2"1/2	1405	1250	665	138	1171	900	589	351	269
ALTI-NEXIS-V613-3-SC-16-T4-FC	2"1/2	1405	1250	665	138	1246	900	589	354	272
ALTI-NEXIS-V614-3-SC-16-T4-FC	2"1/2	1405	1250	665	138	1246	900	589	357	275
ALTI-NEXIS-V615-3-SC-16-T4-FC	2"1/2	1405	1250	665	138	1321	900	589	360	278
ALTI-NEXIS-V616-3-SC-16-T4-FC	2"1/2	1405	1250	665	138	1365	900	589	393	311
ALTI-NEXIS-V1002-3-SC-16-T4-FC	2"1/2	1405	1250	780	168	749	900	704	307	225
ALTI-NEXIS-V1003-3-SC-16-T4-FC	2"1/2	1405	1250	780	168	787	900	704	313	231
ALTI-NEXIS-V1004-3-SC-16-T4-FC	2"1/2	1405	1250	780	168	857	900	704	331	248
ALTI-NEXIS-V1005-3-SC-16-T4-FC	2"1/2	1405	1250	780	168	894	900	704	343	261
ALTI-NEXIS-V1006-3-SC-16-T4-FC	2"1/2	1405	1250	780	168	932	900	704	346	264
ALTI-NEXIS-V1007-3-SC-16-T4-FC	2"1/2	1405	1250	780	168	1005	900	704	356	273
ALTI-NEXIS-V1008-3-SC-16-T4-FC	2"1/2	1405	1250	780	168	1042	900	704	359	276
ALTI-NEXIS-V1009-3-SC-16-T4-FC	2"1/2	1405	1250	780	168	1123	900	704	395	312
ALTI-NEXIS-V1010-3-SC-16-T4-FC	2"1/2	1405	1250	780	168	1161	900	704	398	315
ALTI-NEXIS-V1011-3-SC-16-T4-FC	2"1/2	1405	1250	780	168	1236	900	704	401	318
ALTI-NEXIS-V1012-3-SC-16-T4-FC	2"1/2	1405	1250	780	168	1228	900	704	529	447
ALTI-NEXIS-V1013-3-SC-16-T4-FC	2"1/2	1405	1250	780	168	1303	900	704	532	450
ALTI-NEXIS-V1015-3-SC-16-T4-FC	2"1/2	1405	1250	780	168	1378	900	704	538	456
ALTI-NEXIS-V1603-3-SC-16-T4-FC	3"	1405	1250	824	178	867	900	735	499	416
ALTI-NEXIS-V1604-3-SC-16-T4-FC	3"	1405	1250	824	178	952	900	735	502	420
ALTI-NEXIS-V1605-3-SC-16-T4-FC	3"	1405	1250	824	178	1046	900	735	505	423
ALTI-NEXIS-V1606-3-SC-16-T4-FC	3"	1405	1250	824	178	1096	900	735	346	264
ALTI-NEXIS-V1607-3-SC-16-T4-FC	3"	1405	1250	824	178	1138	900	735	469	386
ALTI-NEXIS-V1608-3-SC-16-T4-FC	3"	1405	1250	824	178	1188	900	735	502	419
ALTI-NEXIS-V1609/K-3-SC-16-T4-FC	3"	1405	1250	824	178	1425	900	735	471	405
ALTI-NEXIS-V1610/K-3-SC-16-T4-FC	3"	1405	1250	824	178	1575	900	735	478	412
ALTI-NEXIS-V1611/K-3-SC-16-T4-FC	3"	1405	1250	824	178	1575	900	735	482	416
ALTI-NEXIS-V2202-3-SC-16-T4-FC	DN100	1405	1250	1195	178	838	900	950	489	418
ALTI-NEXIS-V2203-3-SC-16-T4-FC	DN100	1405	1250	1195	178	920	900	950	511	440
ALTI-NEXIS-V2204-3-SC-16-T4-FC	DN100	1405	1250	1195	178	949	900	950	533	462
ALTI-NEXIS-V2205-3-SC-16-T4-FC	DN100	1405	1250	1195	178	1086	900	950	614	543
ALTI-NEXIS-V2206-3-SC-16-T4-FC	DN100	1405	1250	1195	178	1136	900	950	620	549
ALTI-NEXIS-V5203-3-SC-16-T4-FC	DN150	1900*	1580	1349	263	1221	1500	1064	1156	1016
ALTI-NEXIS-V5204/2/K-3-SC-16-T4-FC	DN150	1900*	1580	1349	263	1581	1500	1064	1236	1086
ALTI-NEXIS-V5204/K-3-SC-16-T4-FC	DN150	1900*	1580	1349	263	1581	1500	1064	1236	1086
ALTI-NEXIS-V5205/2/K-3-SC-16-T4-FC	DN150	1900*	1580	1349	263	1681	1500	1064	1311	1161
ALTI-NEXIS-V5205/K-3-SC-16-T4-FC	DN150	1900*	1580	1349	263	1681	1500	1064	1311	1161
ALTI-NEXIS-V5206/2/K-3-SC-16-T4-FC	DN150	1900*	1580	1349	263	1781	1500	1064	1414	1264
ALTI-NEXIS-V2207-3-SC-16-T4-FC	DN100	1900*	900	1195	178	1186	900	950	775	704
ALTI-NEXIS-V2208-3-SC-16-T4-FC	DN100	1900*	900	1195	178	1236	900	950	875	804
ALTI-NEXIS-V3602/2-3-SC-16-T4-FC	DN125	1405	1300	1306	193	923	1100	1056	612	512
ALTI-NEXIS-V3602-3-SC-16-T4-FC	DN125	1405	1300	1306	193	902	1100	1056	631	531
ALTI-NEXIS-V3603/1-3-SC-16-T4-FC	DN125	1405	1300	1306	193	1056	1100	1056	721	621
ALTI-NEXIS-V3603-3-SC-16-T4-FC	DN125	1900*	900	1306	193	1056	1100	1056	850	775
ALTI-NEXIS-V3604/2-3-SC-16-T4-FC	DN125	1900*	900	1306	193	1122	1100	1056	965	890
ALTI-NEXIS-V3604-3-SC-16-T4-FC	DN125	1900*	900	1306	193	1122	1100	1056	980	890
ALTI-NEXIS-V3605/2/K-3-SC-16-T4-FC	DN125	1900*	1580	1306	228	1484	1500	1056	1104	999
ALTI-NEXIS-V3605/K-3-SC-16-T4-FC	DN125	1900*	1580	1306	228	1484	1500	1056	1104	999
ALTI-NEXIS-V3606/2/K-3-SC-16-T4-FC	DN125	1900*	1580	1306	228	1551	1500	1056	1116	1011
ALTI-NEXIS-V3606/K-3-SC-16-T4-FC	DN125	1900*	1580	1306	228	1551	1500	1056	1170	1065
ALTI-NEXIS-V5202/2-3-SC-16-T4-FC	DN150	1420	1750	1349	243	1014	1500	1064	791	651
ALTI-NEXIS-V5202-3-SC-16-T4-FC	DN150	1420	1750	1349	243	1101	1500	1064	870	730
ALTI-NEXIS-V5203/2-3-SC-16-T4-FC	DN150	1900*	1580	1349	263	1221	1500	1064	1156	1016

ALTI-NEXIS V

DIMENSIONS - ALTI-NEXIS V SERIES - SCFC VERSION

TYPE	Ø	H	L	P	H1	H2	X	P1	Mass	
	Pipes	mm	mm	mm	mm	mm	mm	mm	Incl.packaging	Net
4 PUMPS										
ALTI-NEXIS-V403-4-SC-16-T4-FC	2"	1405	1550	634	138	709	1200	573	380	237
ALTI-NEXIS-V404-4-SC-16-T4-FC	2"	1405	1550	634	138	734	1200	573	384	241
ALTI-NEXIS-V406-4-SC-16-T4-FC	2"	1405	1550	634	138	804	1200	573	398	255
ALTI-NEXIS-V407-4-SC-16-T4-FC	2"	1405	1550	634	138	829	1200	573	404	261
ALTI-NEXIS-V409-4-SC-16-T4-FC	2"	1405	1550	634	138	879	1200	573	408	265
ALTI-NEXIS-V410-4-SC-16-T4-FC	2"	1405	1550	634	138	936	1200	573	427	284
ALTI-NEXIS-V412-4-SC-16-T4-FC	2"	1405	1550	634	138	986	1200	573	431	288
ALTI-NEXIS-V414-4-SC-16-T4-FC	2"	1405	1550	634	138	1036	1200	573	453	309
ALTI-NEXIS-V416-4-SC-16-T4-FC	2"	1405	1550	634	138	1086	1200	573	455	311
ALTI-NEXIS-V418-4-SC-16-T4-FC	2"	1405	1550	634	138	1136	1200	573	459	316
ALTI-NEXIS-V603-4-SC-16-T4-FC	2"1/2	1405	1550	665	138	746	1200	589	392	249
ALTI-NEXIS-V604-4-SC-16-T4-FC	2"1/2	1405	1550	665	138	803	1200	589	404	261
ALTI-NEXIS-V605-4-SC-16-T4-FC	2"1/2	1405	1550	665	138	841	1200	589	412	269
ALTI-NEXIS-V606-4-SC-16-T4-FC	2"1/2	1405	1550	665	138	878	1200	589	416	273
ALTI-NEXIS-V607-4-SC-16-T4-FC	2"1/2	1405	1550	665	138	948	1200	589	435	292
ALTI-NEXIS-V608-4-SC-16-T4-FC	2"1/2	1405	1550	665	138	986	1200	589	439	296
ALTI-NEXIS-V609-4-SC-16-T4-FC	2"1/2	1405	1550	665	138	1023	1200	589	455	312
ALTI-NEXIS-V610-4-SC-16-T4-FC	2"1/2	1405	1550	665	138	1061	1200	589	459	316
ALTI-NEXIS-V611-4-SC-16-T4-FC	2"1/2	1405	1550	665	138	1136	1200	589	463	320
ALTI-NEXIS-V612-4-SC-16-T4-FC	2"1/2	1405	1550	665	138	1171	1200	589	476	333
ALTI-NEXIS-V613-4-SC-16-T4-FC	2"1/2	1405	1550	665	138	1246	1200	589	480	337
ALTI-NEXIS-V614-4-SC-16-T4-FC	2"1/2	1405	1550	665	138	1246	1200	589	484	341
ALTI-NEXIS-V615-4-SC-16-T4-FC	2"1/2	1405	1550	665	138	1321	1200	589	488	345
ALTI-NEXIS-V616-4-SC-16-T4-FC	2"1/2	1405	1550	665	138	1365	1200	589	533	390
ALTI-NEXIS-V1002-4-SC-16-T4-FC	3"	1405	1550	806	168	749	1200	717	420	277
ALTI-NEXIS-V1003-4-SC-16-T4-FC	3"	1405	1550	806	168	787	1200	717	428	285
ALTI-NEXIS-V1004-4-SC-16-T4-FC	3"	1405	1550	806	168	857	1200	717	451	309
ALTI-NEXIS-V1005-4-SC-16-T4-FC	3"	1405	1550	806	168	894	1200	717	467	324
ALTI-NEXIS-V1006-4-SC-16-T4-FC	3"	1405	1550	806	168	932	1200	717	471	328
ALTI-NEXIS-V1007-4-SC-16-T4-FC	3"	1405	1550	806	168	1005	1200	717	484	342
ALTI-NEXIS-V1008-4-SC-16-T4-FC	3"	1405	1550	806	168	1042	1200	717	488	346
ALTI-NEXIS-V1009-4-SC-16-T4-FC	3"	1405	1550	806	168	1123	1200	717	537	395
ALTI-NEXIS-V1010-4-SC-16-T4-FC	3"	1405	1550	806	168	1161	1200	717	541	399
ALTI-NEXIS-V1011-4-SC-16-T4-FC	3"	1405	1550	806	168	1236	1200	717	545	403
ALTI-NEXIS-V1012-4-SC-16-T4-FC	3"	1405	1550	806	168	1228	1200	717	682	539
ALTI-NEXIS-V1013-4-SC-16-T4-FC	3"	1405	1550	806	168	1303	1200	717	686	543
ALTI-NEXIS-V1015-4-SC-16-T4-FC	3"	1405	1550	806	168	1378	1200	717	694	551
ALTI-NEXIS-V1603-4-SC-16-T4-FC	DN100	1405	1550	986	178	867	1200	766	572	429
ALTI-NEXIS-V1604-4-SC-16-T4-FC	DN100	1405	1550	986	178	952	1200	766	645	503
ALTI-NEXIS-V1605-4-SC-16-T4-FC	DN100	1405	1550	986	178	1046	1200	766	654	512
ALTI-NEXIS-V1606-4-SC-16-T4-FC	DN100	1405	1550	986	178	1096	1200	766	702	560
ALTI-NEXIS-V1607-4-SC-16-T4-FC	DN100	1405	1550	986	178	1138	1200	766	819	676
ALTI-NEXIS-V1608-4-SC-16-T4-FC	DN100	1405	1550	986	178	1188	1200	766	823	680
ALTI-NEXIS-V1609/K-4-SC-16-T4-FC	DN100	1405	1550	986	178	1425	1200	766	662	543
ALTI-NEXIS-V1610/K-4-SC-16-T4-FC	DN100	1405	1550	986	178	1575	1200	766	671	552
ALTI-NEXIS-V1611/K-4-SC-16-T4-FC	DN100	1405	1550	986	178	1575	1200	766	676	557
ALTI-NEXIS-V2202-4-SC-16-T4-FC	DN125	1405	1550	1257	178	838	1200	1007	643	543
ALTI-NEXIS-V2203-4-SC-16-T4-FC	DN125	1405	1550	1257	178	920	1200	1007	672	572
ALTI-NEXIS-V2204-4-SC-16-T4-FC	DN125	1405	1550	1257	178	949	1200	1007	700	600
ALTI-NEXIS-V2205-4-SC-16-T4-FC	DN125	1405	1550	1257	178	1086	1200	1007	809	709
ALTI-NEXIS-V2206-4-SC-16-T4-FC	DN125	1405	1550	1257	178	1136	1200	1007	817	717
ALTI-NEXIS-V2207-4-SC-16-T4-FC	DN125	1900*	1200	1257	178	1186	1200	1007	983	883
ALTI-NEXIS-V2208-4-SC-16-T4-FC	DN125	1900*	1200	1257	178	1236	1200	1007	1116	1016
ALTI-NEXIS-V3602/2-4-SC-16-T4-FC	DN150	1405	1600	1372	193	923	1400	1087	765	665
ALTI-NEXIS-V3602-4-SC-16-T4-FC	DN150	1405	1600	1372	193	902	1400	1087	789	689
ALTI-NEXIS-V3603/1-4-SC-16-T4-FC	DN150	1405	1600	1372	193	1056	1400	1087	910	810
ALTI-NEXIS-V3603-4-SC-16-T4-FC	DN150	1900*	1200	1372	193	1056	1400	1087	1067	967
ALTI-NEXIS-V3604/2-4-SC-16-T4-FC	DN150	1900*	1200	1372	193	1122	1400	1087	1221	1121
ALTI-NEXIS-V3604-4-SC-16-T4-FC	DN150	1900*	1200	1372	193	1122	1400	1087	1221	1121
ALTI-NEXIS-V3605/2/K-4-SC-16-T4-FC	DN150	1900*	2080	1372	228	1484	2000	1087	1418	1268
ALTI-NEXIS-V3605/K-4-SC-16-T4-FC	DN150	1900*	2080	1372	228	1484	2000	1087	1418	1268
ALTI-NEXIS-V3606/2/K-4-SC-16-T4-FC	DN150	1900*	2080	1372	228	1551	2000	1087	1434	1284
ALTI-NEXIS-V3606/K-4-SC-16-T4-FC	DN150	1900*	2080	1372	228	1551	2000	1087	1493	1343
ALTI-NEXIS-V5202/2-4-SC-16-T4-FC	DN200	1420	2250	1455	243	1014	2000	1115	1077	847
ALTI-NEXIS-V5202-4-SC-16-T4-FC	DN200	1420	2250	1455	243	1101	2000	1115	1181	951
ALTI-NEXIS-V5203/2-4-SC-16-T4-FC	DN200	1900*	2080	1455	263	1221	2000	1115	1468	1288
ALTI-NEXIS-V5203-4-SC-16-T4-FC	DN200	1900*	2080	1455	263	1221	2000	1115	1468	1288
ALTI-NEXIS-V5204/2/K-4-SC-16-T4-FC	DN200	1900*	2080	1455	263	1581	2000	1115	1570	1380
ALTI-NEXIS-V5204/K-4-SC-16-T4-FC	DN200	1900*	2080	1455	263	1581	2000	1115	1570	1380
ALTI-NEXIS-V5205/2/K-4-SC-16-T4-FC	DN200	1900*	2080	1455	263	1681	2000	1115	1657	1467
ALTI-NEXIS-V5205/K-4-SC-16-T4-FC	DN200	1900*	2080	1455	263	1681	2000	1115	1657	1467
ALTI-NEXIS-V5206/2/K-4-SC-16-T4-FC	DN200	1900*	2080	1455	263	1781	2000	1115	1786	1596

DIMENSIONS - ALTI-NEXIS V SERIES - CC VERSION

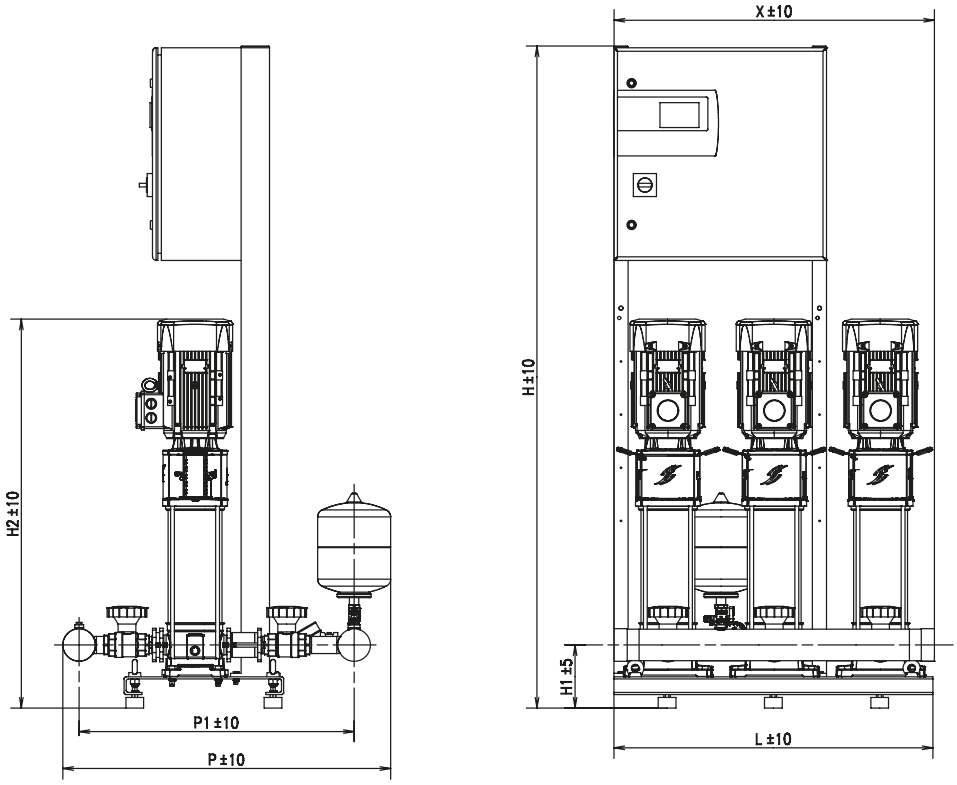

TYPE	Ø	H	L	P	H1	H2	X	P1	Mass	
	Pipes	mm	mm	mm	mm	mm	mm	mm	Incl.packaging	Net
2 PUMPS										
ALTI-NEXIS-V403/K-2-CC-16-T4-01	1"1/2	1670	600	738	138	709	600	611	147	120
ALTI-NEXIS-V404/K-2-CC-16-T4-01	1"1/2	1670	600	738	138	734	600	611	149	122
ALTI-NEXIS-V406/K-2-CC-16-T4-01	1"1/2	1670	600	738	138	804	600	611	155	128
ALTI-NEXIS-V407/K-2-CC-16-T4-01	1"1/2	1670	600	738	138	829	600	611	159	132
ALTI-NEXIS-V409/K-2-CC-16-T4-01	1"1/2	1670	600	738	138	879	600	611	161	134
ALTI-NEXIS-V410/K-2-CC-16-T4-01	1"1/2	1670	600	738	138	936	600	611	171	144
ALTI-NEXIS-V412/K-2-CC-16-T4-01	1"1/2	1870	600	738	138	986	600	611	173	146
ALTI-NEXIS-V414/K-2-CC-16-T4-01	1"1/2	1870	600	738	138	1036	600	611	181	154
ALTI-NEXIS-V416/K-2-CC-16-T4-01	1"1/2	1870	600	738	138	1086	600	611	183	156
ALTI-NEXIS-V418/K-2-CC-16-T4-01	1"1/2	1870	600	738	138	1136	600	611	185	158
ALTI-NEXIS-V603/K-2-CC-16-T4-01	2"	1670	600	758	138	746	600	624	152	125
ALTI-NEXIS-V604/K-2-CC-16-T4-01	2"	1670	600	758	138	803	600	624	158	131
ALTI-NEXIS-V605/K-2-CC-16-T4-01	2"	1670	600	758	138	841	600	624	162	135
ALTI-NEXIS-V606/K-2-CC-16-T4-01	2"	1670	600	758	138	878	600	624	164	137
ALTI-NEXIS-V607/K-2-CC-16-T4-01	2"	1670	600	758	138	948	600	624	174	147
ALTI-NEXIS-V608/K-2-CC-16-T4-01	2"	1870	600	758	138	986	600	624	178	151
ALTI-NEXIS-V609/K-2-CC-16-T4-01	2"	1870	600	758	138	1023	600	624	184	157
ALTI-NEXIS-V610/K-2-CC-16-T4-01	2"	1870	600	758	138	1061	600	624	184	157
ALTI-NEXIS-V611/K-2-CC-16-T4-01	2"	1870	600	758	138	1136	600	624	186	159
ALTI-NEXIS-V612/K-2-CC-16-T4-01	2"	1670	1200	758	138	1171	600	624	274	191
ALTI-NEXIS-V613/K-2-CC-16-T4-01	2"	1670	1200	758	138	1246	600	624	276	193
ALTI-NEXIS-V614/K-2-CC-16-T4-01	2"	1670	1200	758	138	1246	600	624	278	195
ALTI-NEXIS-V615/K-2-CC-16-T4-01	2"	1670	1200	758	138	1321	600	624	280	197
ALTI-NEXIS-V616/K-2-CC-16-T4-01	2"	1670	1200	758	138	1365	600	624	302	219

ALTI-NEXIS V

DIMENSIONS - ALTI-NEXIS V SERIES - CC VERSION

TYPE	Ø	H	L	P	H1	H2	X	P1	Mass	
	Pipes	mm	mm	mm	mm	mm	mm	mm	Incl.packaging	Net
ALTI-NEXIS-V1002/K-2-CC-16-T4-01	2"1/2	1670	600	895	178	749	600	754	161	134
ALTI-NEXIS-V1003/K-2-CC-16-T4-01	2"1/2	1670	600	895	178	787	600	754	165	138
ALTI-NEXIS-V1004/K-2-CC-16-T4-01	2"1/2	1670	600	895	178	894	600	754	177	150
ALTI-NEXIS-V1005/K-2-CC-16-T4-01	2"1/2	1670	600	895	178	894	600	754	183	156
ALTI-NEXIS-V1006/K-2-CC-16-T4-01	2"1/2	1670	600	895	178	932	600	754	185	158
ALTI-NEXIS-V1007/K-2-CC-16-T4-01	2"1/2	1870	600	895	178	1005	600	754	193	166
ALTI-NEXIS-V1008/K-2-CC-16-T4-01	2"1/2	1870	600	895	178	1042	600	754	195	168
ALTI-NEXIS-V1009/K-2-CC-16-T4-01	2"1/2	1870	600	895	178	1123	600	754	219	192
ALTI-NEXIS-V1010/K-2-CC-16-T4-01	2"1/2	1870	600	895	178	1161	600	754	221	194
ALTI-NEXIS-V1011/K-2-CC-16-T4-01	2"1/2	1670	1200	895	178	1236	600	754	247	221
ALTI-NEXIS-V1012/K-2-CC-16-T4-01	2"1/2	1670	1200	895	178	1228	600	754	262	235
ALTI-NEXIS-V1013/K-2-CC-16-T4-01	2"1/2	1670	1200	895	178	1303	600	754	264	237
ALTI-NEXIS-V1015/K-2-CC-16-T4-01	2"1/2	1670	1200	895	178	1378	600	754	315	241
ALTI-NEXIS-V1603/K-2-CC-16-T4-01	2"1/2	1670	600	770	178	867	600	912	193	158
ALTI-NEXIS-V1604/K-2-CC-16-T4-01	2"1/2	1670	600	770	178	952	600	912	203	168
ALTI-NEXIS-V1605/K-2-CC-16-T4-01	2"1/2	1870	600	770	178	1046	600	912	216	190
ALTI-NEXIS-V1606/K-2-CC-16-T4-01	2"1/2	1870	600	770	178	1096	600	912	218	192
ALTI-NEXIS-V1607/K-2-CC-16-T4-01	2"1/2	1870	600	770	178	1173	600	912	257	230
ALTI-NEXIS-V1608/K-2-CC-16-T4-01	2"1/2	1670	1200	770	178	1223	600	912	341	258
ALTI-NEXIS-V1609/K-2-CC-16-T4-01	2"1/2	1705	1580	770	213	1460	1000	912	451	305
ALTI-NEXIS-V1610/K-2-CC-16-T4-01	2"1/2	1705	1580	770	213	1610	1000	912	455	309
ALTI-NEXIS-V1611/K-2-CC-16-T4-01	2"1/2	1705	1580	770	213	1610	1000	912	457	311
3 POMPES										
ALTI-NEXIS-V403/K-3-CC-16-T4-01	1"1/2	1670	900	738	138	709	900	611	229	155
ALTI-NEXIS-V404/K-3-CC-16-T4-01	1"1/2	1670	900	738	138	734	900	611	232	158
ALTI-NEXIS-V406/K-3-CC-16-T4-01	1"1/2	1670	900	738	138	804	900	611	242	168
ALTI-NEXIS-V407/K-3-CC-16-T4-01	1"1/2	1670	900	738	138	829	900	611	247	173
ALTI-NEXIS-V409/K-3-CC-16-T4-01	1"1/2	1670	900	738	138	879	900	611	250	176
ALTI-NEXIS-V410/K-3-CC-16-T4-01	1"1/2	1670	900	738	138	936	900	611	267	193
ALTI-NEXIS-V412/K-3-CC-16-T4-01	1"1/2	1870	900	738	138	986	900	611	271	197
ALTI-NEXIS-V414/K-3-CC-16-T4-01	1"1/2	1870	900	738	138	1036	900	611	284	210
ALTI-NEXIS-V416/K-3-CC-16-T4-01	1"1/2	1870	900	738	138	1086	900	611	286	212
ALTI-NEXIS-V418/K-3-CC-16-T4-01	1"1/2	1870	900	738	138	1136	900	611	289	215
ALTI-NEXIS-V603/K-3-CC-16-T4-01	2"1/2	1670	900	780	138	746	900	639	238	164
ALTI-NEXIS-V604/K-3-CC-16-T4-01	2"1/2	1670	900	780	138	803	900	639	247	173
ALTI-NEXIS-V605/K-3-CC-16-T4-01	2"1/2	1670	900	780	138	841	900	639	253	179
ALTI-NEXIS-V606/K-3-CC-16-T4-01	2"1/2	1670	900	780	138	878	900	639	256	182
ALTI-NEXIS-V607/K-3-CC-16-T4-01	2"1/2	1670	900	780	138	948	900	639	271	197
ALTI-NEXIS-V608/K-3-CC-16-T4-01	2"1/2	1870	900	780	138	986	900	639	276	202
ALTI-NEXIS-V609/K-3-CC-16-T4-01	2"1/2	1870	900	780	138	1023	900	639	285	211
ALTI-NEXIS-V610/K-3-CC-16-T4-01	2"1/2	1870	900	780	138	1061	900	639	289	215
ALTI-NEXIS-V611/K-3-CC-16-T4-01	2"1/2	1870	900	780	138	1136	900	639	292	218
ALTI-NEXIS-V612/K-3-CC-16-T4-01	2"1/2	1670	1500	780	138	1171	900	639	386	244
ALTI-NEXIS-V613/K-3-CC-16-T4-01	2"1/2	1670	1500	780	138	1246	900	639	389	247
ALTI-NEXIS-V614/K-3-CC-16-T4-01	2"1/2	1670	1500	780	138	1246	900	639	392	250
ALTI-NEXIS-V615/K-3-CC-16-T4-01	2"1/2	1670	1500	780	138	1321	900	639	395	253
ALTI-NEXIS-V616/K-3-CC-16-T4-01	2"1/2	1670	1500	780	138	1365	900	639	428	286
ALTI-NEXIS-V1002/K-3-CC-16-T4-01	2"1/2	1670	900	895	178	749	900	754	255	181
ALTI-NEXIS-V1003/K-3-CC-16-T4-01	2"1/2	1670	900	895	178	787	900	754	261	187
ALTI-NEXIS-V1004/K-3-CC-16-T4-01	2"1/2	1670	900	895	178	894	900	754	279	205
ALTI-NEXIS-V1005/K-3-CC-16-T4-01	2"1/2	1670	900	895	178	894	900	754	288	214
ALTI-NEXIS-V1006/K-3-CC-16-T4-01	2"1/2	1670	900	895	178	932	900	754	291	217
ALTI-NEXIS-V1007/K-3-CC-16-T4-01	2"1/2	1870	900	895	178	1005	900	754	305	230
ALTI-NEXIS-V1008/K-3-CC-16-T4-01	2"1/2	1870	900	895	178	1042	900	754	308	233
ALTI-NEXIS-V1009/K-3-CC-16-T4-01	2"1/2	1870	900	895	178	1123	900	754	344	269
ALTI-NEXIS-V1010/K-3-CC-16-T4-01	2"1/2	1870	900	895	178	1161	900	754	347	272
ALTI-NEXIS-V1011/K-3-CC-16-T4-01	2"1/2	1670	1500	895	178	1236	900	754	363	289
ALTI-NEXIS-V1012/K-3-CC-16-T4-01	2"1/2	1670	1500	895	178	1228	900	754	384	310
ALTI-NEXIS-V1013/K-3-CC-16-T4-01	2"1/2	1670	1500	895	178	1303	900	754	387	313
ALTI-NEXIS-V1015/K-3-CC-16-T4-01	2"1/2	1670	1500	895	178	1378	900	754	393	319
ALTI-NEXIS-V1603/K-3-CC-16-T4-01	3"	1670	900	785	178	867	900	980	274	218

DIMENSIONS - ALTI-NEXIS V SERIES - CC VERSION

TYPE	Ø	H	L	P	H1	H2	X	P1	Mass	
	Pipes	mm	mm	mm	mm	mm	mm	mm	Incl.packaging	Net
ALTI-NEXIS-V1604/K-3-CC-16-T4-01	3"	1670	900	785	178	952	900	980	290	233
ALTI-NEXIS-V1605/K-3-CC-16-T4-01	3"	1870	900	785	178	1046	900	980	341	267
ALTI-NEXIS-V1606/K-3-CC-16-T4-01	3"	1870	900	785	178	1096	900	980	344	270
ALTI-NEXIS-V1607/K-3-CC-16-T4-01	3"	1870	900	785	178	1173	900	980	402	328
ALTI-NEXIS-V1608/K-3-CC-16-T4-01	3"	1905	1500	785	178	1223	900	980	490	347
ALTI-NEXIS-V1609/K-3-CC-16-T4-01	3"	1705	2080	785	213	1460	1500	980	597	426
ALTI-NEXIS-V1610/K-3-CC-16-T4-01	3"	1705	2080	785	213	1610	1500	980	603	432
ALTI-NEXIS-V1611/K-3-CC-16-T4-01	3"	1705	2080	785	213	1610	1500	980	606	435
4 POMPES										
ALTI-NEXIS-V403/K-4-CC-16-T4-01	2"	1670	1200	764	138	709	1200	631	276	193
ALTI-NEXIS-V404/K-4-CC-16-T4-01	2"	1670	1200	764	138	734	1200	631	280	197
ALTI-NEXIS-V406/K-4-CC-16-T4-01	2"	1670	1200	764	138	804	1200	631	294	211
ALTI-NEXIS-V407/K-4-CC-16-T4-01	2"	1670	1200	764	138	829	1200	631	300	217
ALTI-NEXIS-V409/K-4-CC-16-T4-01	2"	1670	1200	764	138	879	1200	631	304	221
ALTI-NEXIS-V410/K-4-CC-16-T4-01	2"	1670	1200	764	138	936	1200	631	330	247
ALTI-NEXIS-V412/K-4-CC-16-T4-01	2"	1870	1200	764	138	986	1200	631	334	251
ALTI-NEXIS-V414/K-4-CC-16-T4-01	2"	1870	1200	764	138	1036	1200	631	352	269
ALTI-NEXIS-V416/K-4-CC-16-T4-01	2"	1870	1200	764	138	1086	1200	631	354	271
ALTI-NEXIS-V418/K-4-CC-16-T4-01	2"	1870	1200	764	138	1136	1200	631	358	275
ALTI-NEXIS-V603/K-4-CC-16-T4-01	2"1/2	1670	1200	780	138	746	1200	639	287	205
ALTI-NEXIS-V604/K-4-CC-16-T4-01	2"1/2	1670	1200	780	138	803	1200	639	299	217
ALTI-NEXIS-V605/K-4-CC-16-T4-01	2"1/2	1670	1200	780	138	841	1200	639	307	225
ALTI-NEXIS-V606/K-4-CC-16-T4-01	2"1/2	1670	1200	780	138	878	1200	639	311	229
ALTI-NEXIS-V607/K-4-CC-16-T4-01	2"1/2	1670	1200	780	138	948	1200	639	331	249
ALTI-NEXIS-V608/K-4-CC-16-T4-01	2"1/2	1870	1200	780	138	986	1200	639	337	255
ALTI-NEXIS-V609/K-4-CC-16-T4-01	2"1/2	1870	1200	780	138	1023	1200	639	349	267
ALTI-NEXIS-V610/K-4-CC-16-T4-01	2"1/2	1870	1200	780	138	1061	1200	639	357	275
ALTI-NEXIS-V611/K-4-CC-16-T4-01	2"1/2	1870	1200	780	138	1136	1200	639	361	279
ALTI-NEXIS-V612/K-4-CC-16-T4-01	2"1/2	1670	1800	780	138	1171	1200	639	496	331
ALTI-NEXIS-V613/K-4-CC-16-T4-01	2"1/2	1670	1800	780	138	1246	1200	639	500	335
ALTI-NEXIS-V614/K-4-CC-16-T4-01	2"1/2	1670	1800	780	138	1246	1200	639	504	339
ALTI-NEXIS-V615/K-4-CC-16-T4-01	2"1/2	1670	1800	780	138	1321	1200	639	508	343
ALTI-NEXIS-V616/K-4-CC-16-T4-01	2"1/2	1670	1800	780	138	1365	1200	639	553	387
ALTI-NEXIS-V1002/K-4-CC-16-T4-01	3"	1670	1200	767	178	749	1200	915	314	231
ALTI-NEXIS-V1003/K-4-CC-16-T4-01	3"	1670	1200	767	178	787	1200	915	322	239
ALTI-NEXIS-V1004/K-4-CC-16-T4-01	3"	1670	1200	767	178	894	1200	915	346	263
ALTI-NEXIS-V1005/K-4-CC-16-T4-01	3"	1670	1200	767	178	894	1200	915	358	275
ALTI-NEXIS-V1006/K-4-CC-16-T4-01	3"	1670	1200	767	178	932	1200	915	362	279
ALTI-NEXIS-V1007/K-4-CC-16-T4-01	3"	1870	1200	767	178	1005	1200	915	378	296
ALTI-NEXIS-V1008/K-4-CC-16-T4-01	3"	1870	1200	767	178	1042	1200	915	382	300
ALTI-NEXIS-V1009/K-4-CC-16-T4-01	3"	1870	1200	767	178	1123	1200	915	431	348
ALTI-NEXIS-V1010/K-4-CC-16-T4-01	3"	1870	1200	767	178	1161	1200	915	435	352
ALTI-NEXIS-V1011/K-4-CC-16-T4-01	3"	1670	1800	767	178	1236	1200	915	474	392
ALTI-NEXIS-V1012/K-4-CC-16-T4-01	3"	1670	1800	767	178	1228	1200	915	503	420
ALTI-NEXIS-V1013/K-4-CC-16-T4-01	3"	1670	1800	767	178	1303	1200	915	507	424
ALTI-NEXIS-V1015/K-4-CC-16-T4-01	3"	1670	1800	767	178	1378	1200	915	515	432
ALTI-NEXIS-V1603/K-4-CC-16-T4-01	DN100	1670	1200	816	178	867	1200	1036	377	311
ALTI-NEXIS-V1604/K-4-CC-16-T4-01	DN100	1670	1200	816	178	952	1200	1036	397	332
ALTI-NEXIS-V1605/K-4-CC-16-T4-01	DN100	1870	1200	816	178	1046	1200	1036	459	376
ALTI-NEXIS-V1606/K-4-CC-16-T4-01	DN100	1870	1200	816	178	1096	1200	1036	463	380
ALTI-NEXIS-V1607/K-4-CC-16-T4-01	DN100	1870	1200	816	178	1173	1200	1036	539	457
ALTI-NEXIS-V1608/K-4-CC-16-T4-01	DN100	1905	1800	816	178	1223	1200	1036	666	500
ALTI-NEXIS-V1609/K-4-CC-16-T4-01	DN100	1705	2580	816	213	1460	2000	1036	791	594
ALTI-NEXIS-V1610/K-4-CC-16-T4-01	DN100	1705	2580	816	213	1610	2000	1036	799	602
ALTI-NEXIS-V1611/K-4-CC-16-T4-01	DN100	1705	2580	816	213	1610	2000	1036	803	606

ALTI-NEXIS V

DIMENSIONS - ALTI-NEXIS V SERIES - CC VERSION

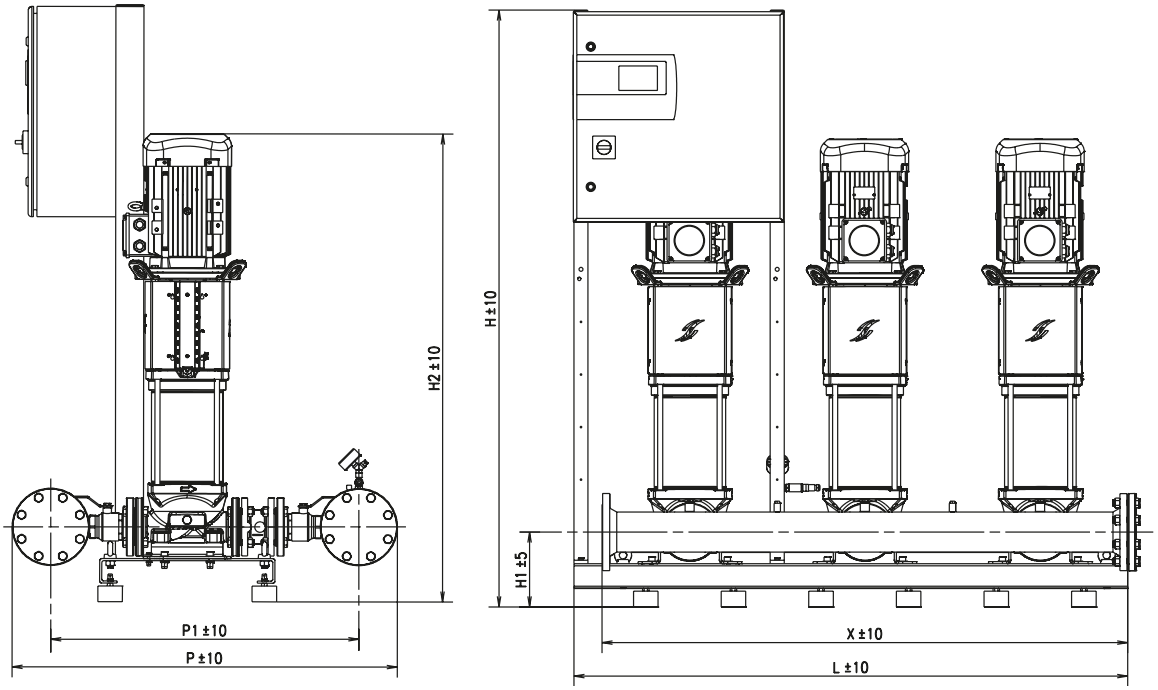

TYPE	Ø	H	L	P	H1	H2	X	P1	LS	Mass	
	pipes	mm	mm	mm	mm	mm	mm	mm	mm	Brute	Net
2 PUMPS											
ALTI-NEXIS-V2202/K-2-CC-16-T4-03	3"	1705	1080	955	213	967	1000	850	–	343	283
ALTI-NEXIS-V2203/K-2-CC-16-T4-03	3"	1905	1080	955	213	1060	1000	850	–	358	298
ALTI-NEXIS-V2204/K-2-CC-16-T4-03	3"	1705	1080	955	213	1251	1000	850	–	421	358
ALTI-NEXIS-V2205/K-2-CC-16-T4-03	3"	1705	1080	955	213	1336	1000	850	–	437	374
ALTI-NEXIS-V2206/K-2-CC-16-T4-03	3"	1905	1080	955	213	1386	1000	850	–	441	378
ALTI-NEXIS-V2207/K-2-CC-16-T4-03	3"	1705	1580	955	213	1436	1000	850	–	505	409
ALTI-NEXIS-V2208/K-2-CC-16-T4-03	3"	1705	1580	955	213	1597	1000	850	–	573	477
ALTI-NEXIS-V3602/1/K-2-CC-16-T4-03	DN100	1705	1080	1288	228	1199	1000	1068	–	477	414
ALTI-NEXIS-V3602/2/K-2-CC-16-T4-03	DN100	1905	1080	1288	228	1058	1000	1068	–	417	357
ALTI-NEXIS-V3602/K-2-CC-16-T4-03	DN100	1705	1080	1288	228	1199	1000	1068	–	477	414
ALTI-NEXIS-V3603/1/K-2-CC-16-T4-03	DN100	1705	1080	1288	228	1301	1000	1068	–	495	432
ALTI-NEXIS-V3603/2/K-2-CC-16-T4-03	DN100	1705	1080	1288	228	1301	1000	1068	–	495	432
ALTI-NEXIS-V3603/K-2-CC-16-T4-03	DN100	1905	1080	1288	228	1301	1000	1068	–	502	439
ALTI-NEXIS-V3604/2/K-2-CC-16-T4-03	DN100	1705	1580	1288	228	1478	1000	1068	–	630	534
ALTI-NEXIS-V3604/K-2-CC-16-T4-03	DN100	1705	1580	1288	228	1478	1000	1068	–	630	534
ALTI-NEXIS-V3605/2/K-2-CC-16-T4-03	DN100	1705	1580	1288	228	1545	1000	1068	–	659	563
ALTI-NEXIS-V3605/K-2-CC-16-T4-03	DN100	1705	1580	1288	228	1542	1000	1068	–	659	563
ALTI-NEXIS-V3606/2/K-2-CC-16-T4-03	DN100	1705	1580	1288	228	1612	1000	1068	–	665	569
ALTI-NEXIS-V3606/K-2-CC-16-T4-03	DN100	1705	1580	1288	228	1612	1000	1068	–	688	592
ALTI-NEXIS-V5202/2/K-2-CC-16-T4-03	DN125	1705	1080	1286	263	1301	1000	1036	–	524	461
ALTI-NEXIS-V5202/K-2-CC-16-T4-03	DN125	1705	1080	1286	263	1301	1000	1036	–	538	475
ALTI-NEXIS-V5203/2/K-2-CC-16-T4-03	DN125	1705	1580	1286	263	1512	1000	1036	–	671	575
ALTI-NEXIS-V5203/K-2-CC-16-T4-03	DN125	1705	1580	1286	263	1512	1000	1036	–	671	575
ALTI-NEXIS-V5204/2/K-2-CC-16-T4-03	DN125	1705	1580	1286	263	1612	1000	1036	–	704	608
ALTI-NEXIS-V5204/K-2-CC-16-T4-03	DN125	1705	1580	1286	263	1612	1000	1036	–	704	608
ALTI-NEXIS-V5205/2/K-2-CC-16-T4-03	DN125	1705	1580	1286	263	1712	1000	1036	–	733	637
ALTI-NEXIS-V5205/K-2-CC-16-T4-03	DN125	1705	1580	1286	263	1712	1000	1036	–	733	637
ALTI-NEXIS-V5206/2/K-2-CC-16-T4-03	DN125	1705	1580	1286	263	1855	1000	1036	–	786	690

DIMENSIONS - ALTI-NEXIS V SERIES - CC VERSION

TYPE	Ø	H	L	P	H1	H2	X	P1	LS	Mass	
	pipes	mm	mm	mm	mm	mm	mm	mm	mm	Brute	Net
3 PUMPS											
ALTI-NEXIS-V2202/K-3-CC-16-T4-03	DN100	1705	1580	1100	213	967	1500	880	–	530	436
ALTI-NEXIS-V2203/K-3-CC-16-T4-03	DN100	1905	1580	1100	213	1060	1500	880	–	551	457
ALTI-NEXIS-V2204/K-3-CC-16-T4-03	DN100	1705	1580	1100	213	1251	1500	880	–	646	548
ALTI-NEXIS-V2205/K-3-CC-16-T4-03	DN100	1705	1580	1100	213	1336	1500	880	–	669	571
ALTI-NEXIS-V2206/K-3-CC-16-T4-03	DN100	1905	1580	1100	213	1386	1500	880	–	675	577
ALTI-NEXIS-V2207/K-3-CC-16-T4-03	DN100	1705	2080	1100	213	1436	1500	880	–	744	610
ALTI-NEXIS-V2208/K-3-CC-16-T4-03	DN100	1705	2080	1100	213	1597	1500	880	–	846	712
ALTI-NEXIS-V3602/1/K-3-CC-16-T4-03	DN125	1705	1580	1343	228	1199	1500	1093	–	698	600
ALTI-NEXIS-V3602/2/K-3-CC-16-T4-03	DN125	1905	1580	1343	228	1058	1500	1093	–	607	513
ALTI-NEXIS-V3602/K-3-CC-16-T4-03	DN125	1705	1580	1343	228	1199	1500	1093	–	698	600
ALTI-NEXIS-V3603/1/K-3-CC-16-T4-03	DN125	1705	1580	1343	228	1301	1500	1093	–	725	627
ALTI-NEXIS-V3603/2/K-3-CC-16-T4-03	DN125	1705	1580	1343	228	1301	1500	1093	–	725	627
ALTI-NEXIS-V3603/K-3-CC-16-T4-03	DN125	1905	1580	1343	228	1301	1500	1093	–	732	634
ALTI-NEXIS-V3604/2/K-3-CC-16-T4-03	DN125	1705	2080	1343	228	1478	1500	1093	–	900	766
ALTI-NEXIS-V3604/K-3-CC-16-T4-03	DN125	1705	2080	1343	228	1478	1500	1093	–	900	766
ALTI-NEXIS-V3605/2/K-3-CC-16-T4-03	DN125	1705	2080	1343	228	1545	1500	1093	–	943	809
ALTI-NEXIS-V3605/K-3-CC-16-T4-03	DN125	1705	2080	1343	228	1542	1500	1093	–	943	809
ALTI-NEXIS-V3606/2/K-3-CC-16-T4-03	DN125	1705	2080	1343	228	1612	1500	1093	–	952	818
ALTI-NEXIS-V3606/K-3-CC-16-T4-03	DN125	1900*	2080	1343	228	1612	1500	1093	–	1016	918
ALTI-NEXIS-V5202/2/K-3-CC-16-T4-03	DN150	1705	1580	1351	263	1301	1500	1066	–	773	675
ALTI-NEXIS-V5202/K-3-CC-16-T4-03	DN150	1705	1580	1351	263	1301	1500	1066	–	794	696
ALTI-NEXIS-V5203/2/K-3-CC-16-T4-03	DN150	1705	2080	1351	263	1512	1500	1066	–	966	832
ALTI-NEXIS-V5203/K-3-CC-16-T4-03	DN150	1705	2080	1351	263	1512	1500	1066	–	966	832
ALTI-NEXIS-V5204/2/K-3-CC-16-T4-03	DN150	1705	2080	1351	263	1612	1500	1066	–	1015	881
ALTI-NEXIS-V5204/K-3-CC-16-T4-03	DN150	1705	2080	1351	263	1612	1500	1066	–	1015	881
ALTI-NEXIS-V5205/2/K-3-CC-16-T4-03*	DN150	1705	2080	1351	263	1712	1500	1066	800	1088	990
ALTI-NEXIS-V5205/K-3-CC-16-T4-03*	DN150	1705	2080	1351	263	1712	1500	1066	800	1088	990
ALTI-NEXIS-V5206/2/K-3-CC-16-T4-03*	DN150	1705	2080	1351	263	1855	1500	1066	800	1168	1070
4 PUMPS											
ALTI-NEXIS-V2202/K-4-CC-16-T4-03	DN125	1705	2080	1160	213	967	2000	910	–	704	574
ALTI-NEXIS-V2203/K-4-CC-16-T4-03	DN125	1905	2080	1160	213	1060	2000	910	–	733	603
ALTI-NEXIS-V2204/K-4-CC-16-T4-03	DN125	1705	2080	1160	213	1251	2000	910	–	860	724
ALTI-NEXIS-V2205/K-4-CC-16-T4-03	DN125	1705	2080	1160	213	1336	2000	910	–	921	755
ALTI-NEXIS-V2206/K-4-CC-16-T4-03	DN125	1905	2080	1160	213	1386	2000	910	–	900	764
ALTI-NEXIS-V2207/K-4-CC-16-T4-03	DN125	1705	2580	1160	213	1436	2000	910	–	972	808
ALTI-NEXIS-V2208/K-4-CC-16-T4-03	DN125	1705	2580	1160	213	1597	2000	910	–	1108	944
ALTI-NEXIS-V3602/1/K-4-CC-16-T4-03	DN150	1705	2080	1397	228	1199	2000	1112	–	930	794
ALTI-NEXIS-V3602/2/K-4-CC-16-T4-03	DN150	1905	2080	1397	228	1058	2000	1112	–	808	678
ALTI-NEXIS-V3602/K-4-CC-16-T4-03	DN150	1705	2080	1397	228	1199	2000	1112	–	930	794
ALTI-NEXIS-V3603/1/K-4-CC-16-T4-03	DN150	1705	2080	1397	228	1301	2000	1112	–	966	830
ALTI-NEXIS-V3603/2/K-4-CC-16-T4-03	DN150	1705	2080	1397	228	1301	2000	1112	–	966	830
ALTI-NEXIS-V3603/K-4-CC-16-T4-03	DN150	1905	2080	1397	228	1301	2000	1112	–	977	841
ALTI-NEXIS-V3604/2/K-4-CC-16-T4-03	DN150	1705	2580	1397	228	1478	2000	1112	–	1180	1016
ALTI-NEXIS-V3604/K-4-CC-16-T4-03	DN150	1705	2580	1397	228	1478	2000	1112	–	1180	1016
ALTI-NEXIS-V3605/2/K-4-CC-16-T4-03	DN150	1705	2580	1397	228	1545	2000	1112	–	1237	1073
ALTI-NEXIS-V3605/K-4-CC-16-T4-03	DN150	1705	2580	1397	228	1542	2000	1112	–	1237	1073
ALTI-NEXIS-V3606/2/K-4-CC-16-T4-03	DN150	1705	2580	1397	228	1612	2000	1112	–	1249	1085
ALTI-NEXIS-V3606/K-4-CC-16-T4-03	DN150	1900*	2580	1397	228	1612	2000	1112	–	1324	1188
ALTI-NEXIS-V5202/2/K-4-CC-16-T4-03	DN200	1705	2080	1456	263	1301	2000	1116	–	1031	895
ALTI-NEXIS-V5202/K-4-CC-16-T4-03	DN200	1705	2080	1456	263	1301	2000	1116	–	1057	921
ALTI-NEXIS-V5203/2/K-4-CC-16-T4-03	DN200	1705	2580	1456	263	1512	2000	1116	–	1269	1105
ALTI-NEXIS-V5203/K-4-CC-16-T4-03	DN200	1705	2580	1456	263	1512	2000	1116	–	1269	1105
ALTI-NEXIS-V5204/2/K-4-CC-16-T4-03	DN200	1705	2580	1456	263	1612	2000	1116	–	1334	1170
ALTI-NEXIS-V5204/K-4-CC-16-T4-03	DN200	1705	2580	1456	263	1612	2000	1116	–	1334	1170
ALTI-NEXIS-V5205/2/K-4-CC-16-T4-03*	DN200	1705	2580	1456	263	1712	2000	1116	800	1421	1285
ALTI-NEXIS-V5205/K-4-CC-16-T4-03*	DN200	1705	2580	1456	263	1712	2000	1116	800	1421	1285
ALTI-NEXIS-V5206/2/K-4-CC-16-T4-03*	DN200	1705	2580	1456	263	1855	2000	1116	800	1527	1391

* remote cabinet

ALTI-NEXIS V

DIMENSIONS - ALTI-NEXIS V SERIES - CCFC VERSION

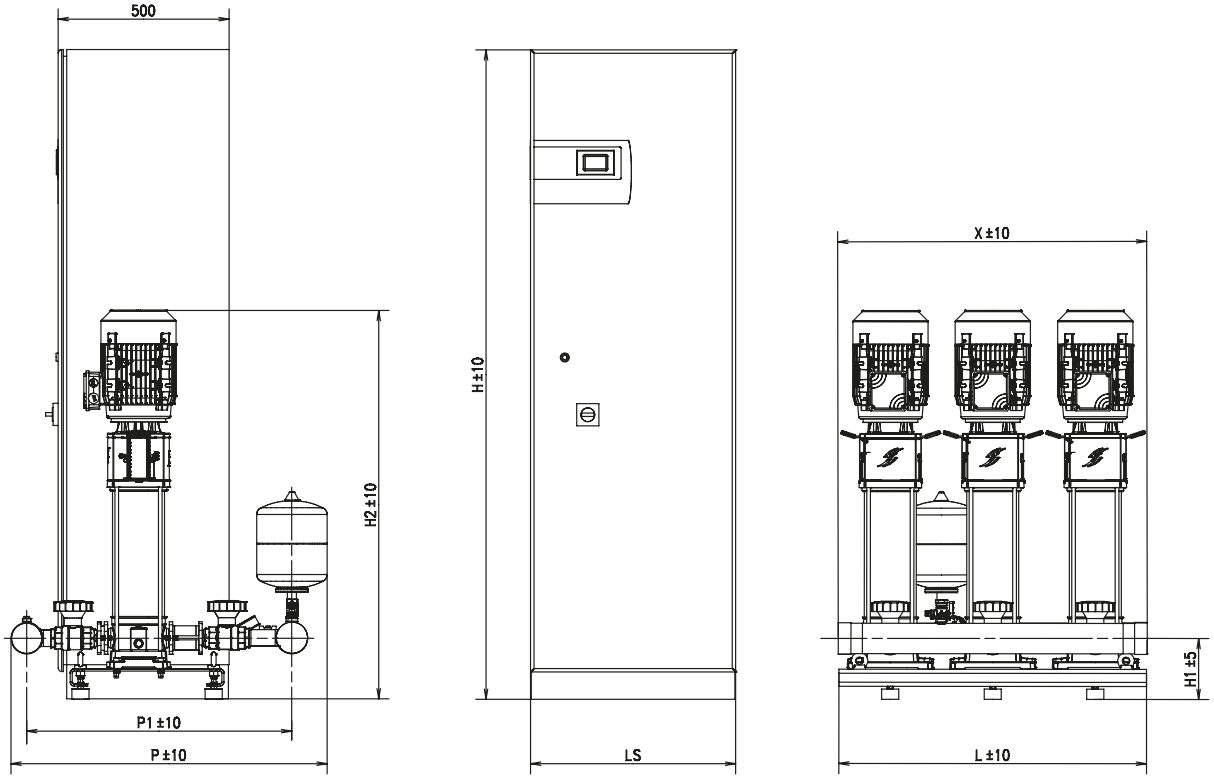

TYPE	Ø	H	L	P	H1	H2	X	P1	LS	Mass	
	pipes	mm	mm	mm	mm	mm	mm	mm	mm	Brute	Net
2 PUMPS											
ALTI-NEXIS-V403/K-2-CC-16-T4-FC-01	1"1/2	1670	600	738	138	709	600	611	–	158	131
ALTI-NEXIS-V404/K-2-CC-16-T4-FC-01	1"1/2	1670	600	738	138	734	600	611	–	160	133
ALTI-NEXIS-V406/K-2-CC-16-T4-FC-01	1"1/2	1670	600	738	138	804	600	611	–	166	139
ALTI-NEXIS-V407/K-2-CC-16-T4-FC-01	1"1/2	1870	600	738	138	829	600	611	–	172	145
ALTI-NEXIS-V409/K-2-CC-16-T4-FC-01	1"1/2	1870	600	738	138	879	600	611	–	174	147
ALTI-NEXIS-V410/K-2-CC-16-T4-FC-01	1"1/2	1870	600	738	138	936	600	611	–	182	155
ALTI-NEXIS-V412/K-2-CC-16-T4-FC-01	1"1/2	1870	600	738	138	986	600	611	–	184	157
ALTI-NEXIS-V414/K-2-CC-16-T4-FC-01	1"1/2	1670	1200	738	138	1036	600	611	–	276	193
ALTI-NEXIS-V416/K-2-CC-16-T4-FC-01	1"1/2	1670	1200	738	138	1086	600	611	–	278	195
ALTI-NEXIS-V418/K-2-CC-16-T4-FC-01	1"1/2	1670	1200	738	138	1136	600	611	–	280	197
ALTI-NEXIS-V603/K-2-CC-16-T4-FC-01	2"	1670	600	758	138	746	600	624	–	163	136
ALTI-NEXIS-V604/K-2-CC-16-T4-FC-01	2"	1670	600	758	138	803	600	624	–	169	142
ALTI-NEXIS-V605/K-2-CC-16-T4-FC-01	2"	1870	600	758	138	841	600	624	–	175	148
ALTI-NEXIS-V606/K-2-CC-16-T4-FC-01	2"	1870	600	758	138	878	600	624	–	177	150
ALTI-NEXIS-V607/K-2-CC-16-T4-FC-01	2"	1870	600	758	138	948	600	624	–	187	160
ALTI-NEXIS-V608/K-2-CC-16-T4-FC-01	2"	1870	600	758	138	986	600	624	–	189	162
ALTI-NEXIS-V609/K-2-CC-16-T4-FC-01	2"	1670	1200	758	138	1023	600	624	–	261	178
ALTI-NEXIS-V610/K-2-CC-16-T4-FC-01	2"	1670	1200	758	138	1061	600	624	–	278	196
ALTI-NEXIS-V611/K-2-CC-16-T4-FC-01	2"	1670	1200	758	138	1136	600	624	–	280	198
ALTI-NEXIS-V612/K-2-CC-16-T4-FC-01	2"	1670	1200	758	138	1171	600	624	–	289	206
ALTI-NEXIS-V613/K-2-CC-16-T4-FC-01	2"	1670	1200	758	138	1246	600	624	–	291	208
ALTI-NEXIS-V614/K-2-CC-16-T4-FC-01	2"	1670	1200	758	138	1246	600	624	–	293	210
ALTI-NEXIS-V615/K-2-CC-16-T4-FC-01	2"	1670	1200	758	138	1321	600	624	–	295	212
ALTI-NEXIS-V616/K-2-CC-16-T4-FC-01	2"	1670	1200	758	138	1365	600	624	–	317	234
ALTI-NEXIS-V1002/K-2-CC-16-T4-FC-01	2"1/2	1670	600	895	178	749	600	754	–	172	145

DIMENSIONS - ALTI-NEXIS V SERIES - CCFC VERSION

TYPE	Ø	H	L	P	H1	H2	X	P1	LS	Mass	
	pipes	mm	mm	mm	mm	mm	mm	mm	mm	Brute	Net
ALTI-NEXIS-V1003/K-2-CC-16-T4-FC-01	2"1/2	1870	600	895	178	787	600	754	–	176	149
ALTI-NEXIS-V1004/K-2-CC-16-T4-FC-01	2"1/2	1870	600	895	178	894	600	754	–	188	161
ALTI-NEXIS-V1005/K-2-CC-16-T4-FC-01	2"1/2	1870	600	895	178	894	600	754	–	198	171
ALTI-NEXIS-V1006/K-2-CC-16-T4-FC-01	2"1/2	1870	600	895	178	932	600	754	–	200	173
ALTI-NEXIS-V1007/K-2-CC-16-T4-FC-01	2"1/2	1870	600	895	178	1005	600	754	–	208	181
ALTI-NEXIS-V1008/K-2-CC-16-T4-FC-01	2"1/2	1670	1200	895	178	1042	600	754	–	234	208
ALTI-NEXIS-V1009/K-2-CC-16-T4-FC-01	2"1/2	1670	1200	895	178	1123	600	754	–	258	232
ALTI-NEXIS-V1010/K-2-CC-16-T4-FC-01	2"1/2	1670	1200	895	178	1161	600	754	–	260	234
ALTI-NEXIS-V1011/K-2-CC-16-T4-FC-01	2"1/2	1670	1200	895	178	1236	600	754	–	262	236
ALTI-NEXIS-V1012/K-2-CC-16-T4-FC-01*	2"1/2	1900	600	895	178	1228	600	754	600	374	347
ALTI-NEXIS-V1013/K-2-CC-16-T4-FC-01*	2"1/2	1900	600	895	178	1303	600	754	600	376	349
ALTI-NEXIS-V1015/K-2-CC-16-T4-FC-01*	2"1/2	1900	600	895	178	1378	600	754	600	428	353
ALTI-NEXIS-V1603/K-2-CC-16-T4-FC-01	2"1/2	1870	600	770	178	867	600	912	–	208	172
ALTI-NEXIS-V1604/K-2-CC-16-T4-FC-01	2"1/2	1870	600	770	178	952	600	912	–	218	183
ALTI-NEXIS-V1605/K-2-CC-16-T4-FC-01	2"1/2	1670	1200	770	178	1046	600	912	–	312	229
ALTI-NEXIS-V1606/K-2-CC-16-T4-FC-01*	2"1/2	1670	1200	770	178	1096	600	912	–	314	231
ALTI-NEXIS-V1607/K-2-CC-16-T4-FC-01*	2"1/2	1900	600	770	178	1173	600	912	600	374	348
ALTI-NEXIS-V1608/K-2-CC-16-T4-FC-01*	2"1/2	1900	600	770	178	1223	600	912	600	378	351
ALTI-NEXIS-V1609/K-2-CC-16-T4-FC-01*	2"1/2	1900	1080	770	213	1460	1000	912	600	477	399
ALTI-NEXIS-V1610/K-2-CC-16-T4-FC-01*	2"1/2	1900	1080	770	213	1610	1000	912	600	481	403
ALTI-NEXIS-V1611/K-2-CC-16-T4-FC-01*	2"1/2	1900	1080	770	213	1610	1000	912	600	483	405
3 PUMPS											
ALTI-NEXIS-V403/K-3-CC-16-T4-FC-01	1"1/2	1670	900	738	138	709	900	611	–	242	168
ALTI-NEXIS-V404/K-3-CC-16-T4-FC-01	1"1/2	1670	900	738	138	734	900	611	–	245	171
ALTI-NEXIS-V406/K-3-CC-16-T4-FC-01	1"1/2	1670	900	738	138	804	900	611	–	255	181
ALTI-NEXIS-V407/K-3-CC-16-T4-FC-01	1"1/2	1870	900	738	138	829	900	611	–	262	188
ALTI-NEXIS-V409/K-3-CC-16-T4-FC-01	1"1/2	1870	900	738	138	879	900	611	–	265	191
ALTI-NEXIS-V410/K-3-CC-16-T4-FC-01	1"1/2	1870	900	738	138	936	900	611	–	281	207
ALTI-NEXIS-V412/K-3-CC-16-T4-FC-01	1"1/2	1870	900	738	138	986	900	611	–	284	210
ALTI-NEXIS-V414/K-3-CC-16-T4-FC-01	1"1/2	1670	1500	738	138	1036	900	611	–	382	240
ALTI-NEXIS-V416/K-3-CC-16-T4-FC-01	1"1/2	1670	1500	738	138	1086	900	611	–	384	242
ALTI-NEXIS-V418/K-3-CC-16-T4-FC-01	1"1/2	1670	1500	738	138	1136	900	611	–	387	245
ALTI-NEXIS-V603/K-3-CC-16-T4-FC-01	2"1/2	1670	900	780	138	746	900	639	–	250	177
ALTI-NEXIS-V604/K-3-CC-16-T4-FC-01	2"1/2	1670	900	780	138	803	900	639	–	259	185
ALTI-NEXIS-V605/K-3-CC-16-T4-FC-01	2"1/2	1870	900	780	138	841	900	639	–	267	193
ALTI-NEXIS-V606/K-3-CC-16-T4-FC-01	2"1/2	1870	900	780	138	878	900	639	–	270	196
ALTI-NEXIS-V607/K-3-CC-16-T4-FC-01	2"1/2	1870	900	780	138	948	900	639	–	285	211
ALTI-NEXIS-V608/K-3-CC-16-T4-FC-01	2"1/2	1870	900	780	138	986	900	639	–	288	214
ALTI-NEXIS-V609/K-3-CC-16-T4-FC-01	2"1/2	1670	1500	780	138	1023	900	639	–	378	235
ALTI-NEXIS-V610/K-3-CC-16-T4-FC-01	2"1/2	1670	1500	780	138	1061	900	639	–	387	244
ALTI-NEXIS-V611/K-3-CC-16-T4-FC-01	2"1/2	1670	1500	780	138	1136	900	639	–	390	247
ALTI-NEXIS-V612/K-3-CC-16-T4-FC-01	2"1/2	1670	1500	780	138	1171	900	639	–	402	259
ALTI-NEXIS-V613/K-3-CC-16-T4-FC-01	2"1/2	1670	1500	780	138	1246	900	639	–	405	262
ALTI-NEXIS-V614/K-3-CC-16-T4-FC-01	2"1/2	1670	1500	780	138	1246	900	639	–	408	265
ALTI-NEXIS-V615/K-3-CC-16-T4-FC-01	2"1/2	1670	1500	780	138	1321	900	639	–	411	268
ALTI-NEXIS-V616/K-3-CC-16-T4-FC-01	2"1/2	1670	1500	780	138	1365	900	639	–	444	301
ALTI-NEXIS-V1002/K-3-CC-16-T4-FC-01	2"1/2	1670	900	895	178	749	900	754	–	268	193
ALTI-NEXIS-V1003/K-3-CC-16-T4-FC-01	2"1/2	1870	900	895	178	787	900	754	–	275	200
ALTI-NEXIS-V1004/K-3-CC-16-T4-FC-01	2"1/2	1870	900	895	178	894	900	754	–	293	218
ALTI-NEXIS-V1005/K-3-CC-16-T4-FC-01	2"1/2	1870	900	895	178	894	900	754	–	306	231
ALTI-NEXIS-V1006/K-3-CC-16-T4-FC-01	2"1/2	1870	900	895	178	932	900	754	–	308	234
ALTI-NEXIS-V1007/K-3-CC-16-T4-FC-01	2"1/2	1870	900	895	178	1005	900	754	–	320	246
ALTI-NEXIS-V1008/K-3-CC-16-T4-FC-01	2"1/2	1670	1500	895	178	1042	900	754	–	336	262
ALTI-NEXIS-V1009/K-3-CC-16-T4-FC-01	2"1/2	1670	1500	895	178	1123	900	754	–	372	298
ALTI-NEXIS-V1010/K-3-CC-16-T4-FC-01	2"1/2	1670	1500	895	178	1161	900	754	–	375	301

ALTI-NEXIS V

DIMENSIONS - ALTI-NEXIS V SERIES - CCFC VERSION

TYPE	Ø	H	L	P	H1	H2	X	P1	LS	Mass	
	pipes	mm	mm	mm	mm	mm	mm	mm	mm	Brute	Net
3 PUMPS											
ALTI-NEXIS-V1011/K-3-CC-16-T4-FC-01	2"1/2	1670	1500	895	178	1236	900	754	–	378	304
ALTI-NEXIS-V1012/K-3-CC-16-T4-FC-01*	2"1/2	1900	1580	895	178	1228	900	754	600	519	445
ALTI-NEXIS-V1013/K-3-CC-16-T4-FC-01*	2"1/2	1900	1580	895	178	1303	900	754	600	522	448
ALTI-NEXIS-V1015/K-3-CC-16-T4-FC-01*	2"1/2	1900	1580	895	178	1378	900	754	600	528	454
ALTI-NEXIS-V1603/K-3-CC-16-T4-FC-01	3"	1870	900	785	178	867	900	980	–	292	235
ALTI-NEXIS-V1604/K-3-CC-16-T4-FC-01	3"	1870	900	785	178	952	900	980	–	307	250
ALTI-NEXIS-V1605/K-3-CC-16-T4-FC-01	3"	1670	1500	785	178	1046	900	980	–	439	296
ALTI-NEXIS-V1606/K-3-CC-16-T4-FC-01	3"	1670	1500	785	178	1096	900	980	–	442	299
ALTI-NEXIS-V1607/K-3-CC-16-T4-FC-01*	3"	1900	900	785	178	1173	900	980	600	520	446
ALTI-NEXIS-V1608/K-3-CC-16-T4-FC-01*	3"	1900	900	785	178	1223	900	980	600	526	452
ALTI-NEXIS-V1609/K-3-CC-16-T4-FC-01*	3"	1900	1580	785	213	1460	1500	980	600	667	519
ALTI-NEXIS-V1610/K-3-CC-16-T4-FC-01*	3"	1900	1580	785	213	1610	1500	980	600	673	525
ALTI-NEXIS-V1611/K-3-CC-16-T4-FC-01*	3"	1900	1580	785	213	1610	1500	980	600	676	528
4 PUMPS											
ALTI-NEXIS-V403/K-4-CC-16-T4-FC-01	2"	1670	1200	764	138	709	1200	631	–	289	206
ALTI-NEXIS-V404/K-4-CC-16-T4-FC-01	2"	1670	1200	764	138	734	1200	631	–	293	210
ALTI-NEXIS-V406/K-4-CC-16-T4-FC-01	2"	1670	1200	764	138	804	1200	631	–	307	224
ALTI-NEXIS-V407/K-4-CC-16-T4-FC-01	2"	1870	1200	764	138	829	1200	631	–	315	232
ALTI-NEXIS-V409/K-4-CC-16-T4-FC-01	2"	1870	1200	764	138	879	1200	631	–	319	236
ALTI-NEXIS-V410/K-4-CC-16-T4-FC-01	2"	1870	1200	764	138	936	1200	631	–	343	260
ALTI-NEXIS-V412/K-4-CC-16-T4-FC-01	2"	1870	1200	764	138	986	1200	631	–	347	264
ALTI-NEXIS-V414/K-4-CC-16-T4-FC-01	2"	1670	1800	764	138	1036	1200	631	–	487	321
ALTI-NEXIS-V416/K-4-CC-16-T4-FC-01	2"	1670	1800	764	138	1086	1200	631	–	489	323
ALTI-NEXIS-V418/K-4-CC-16-T4-FC-01	2"	1670	1800	764	138	1136	1200	631	–	493	327
ALTI-NEXIS-V603/K-4-CC-16-T4-FC-01	2"1/2	1670	1200	780	138	746	1200	639	–	300	218
ALTI-NEXIS-V604/K-4-CC-16-T4-FC-01	2"1/2	1670	1200	780	138	803	1200	639	–	312	230
ALTI-NEXIS-V605/K-4-CC-16-T4-FC-01	2"1/2	1870	1200	780	138	841	1200	639	–	322	240
ALTI-NEXIS-V606/K-4-CC-16-T4-FC-01	2"1/2	1870	1200	780	138	878	1200	639	–	326	244
ALTI-NEXIS-V607/K-4-CC-16-T4-FC-01	2"1/2	1870	1200	780	138	948	1200	639	–	346	264
ALTI-NEXIS-V608/K-4-CC-16-T4-FC-01	2"1/2	1870	1200	780	138	986	1200	639	–	350	268
ALTI-NEXIS-V609/K-4-CC-16-T4-FC-01	2"1/2	1670	1800	780	138	1023	1200	639	–	458	292
ALTI-NEXIS-V610/K-4-CC-16-T4-FC-01	2"1/2	1670	1800	780	138	1061	1200	639	–	392	327
ALTI-NEXIS-V611/K-4-CC-16-T4-FC-01	2"1/2	1670	1800	780	138	1136	1200	639	–	496	331
ALTI-NEXIS-V612/K-4-CC-16-T4-FC-01	2"1/2	1670	1800	780	138	1171	1200	639	–	512	347
ALTI-NEXIS-V613/K-4-CC-16-T4-FC-01	2"1/2	1670	1800	780	138	1246	1200	639	–	516	351
ALTI-NEXIS-V614/K-4-CC-16-T4-FC-01	2"1/2	1670	1800	780	138	1246	1200	639	–	520	355
ALTI-NEXIS-V615/K-4-CC-16-T4-FC-01	2"1/2	1670	1800	780	138	1321	1200	639	–	524	359
ALTI-NEXIS-V616/K-4-CC-16-T4-FC-01	2"1/2	1670	1800	780	138	1365	1200	639	–	569	404
ALTI-NEXIS-V1002/K-4-CC-16-T4-FC-01	3"	1670	1200	767	178	749	1200	915	–	327	244
ALTI-NEXIS-V1003/K-4-CC-16-T4-FC-01	3"	1870	1200	767	178	787	1200	915	–	335	252
ALTI-NEXIS-V1004/K-4-CC-16-T4-FC-01	3"	1870	1200	767	178	894	1200	915	–	359	276
ALTI-NEXIS-V1005/K-4-CC-16-T4-FC-01	3"	1870	1200	767	178	894	1200	915	–	374	292
ALTI-NEXIS-V1006/K-4-CC-16-T4-FC-01	3"	1870	1200	767	178	932	1200	915	–	378	296
ALTI-NEXIS-V1007/K-4-CC-16-T4-FC-01	3"	1870	1200	767	178	1005	1200	915	–	394	312
ALTI-NEXIS-V1008/K-4-CC-16-T4-FC-01	3"	1670	1800	767	178	1042	1200	915	–	434	351
ALTI-NEXIS-V1009/K-4-CC-16-T4-FC-01	3"	1670	1800	767	178	1123	1200	915	–	483	400
ALTI-NEXIS-V1010/K-4-CC-16-T4-FC-01	3"	1670	1800	767	178	1161	1200	915	–	487	404
ALTI-NEXIS-V1011/K-4-CC-16-T4-FC-01	3"	1670	1800	767	178	1236	1200	915	–	491	408
ALTI-NEXIS-V1012/K-4-CC-16-T4-FC-01*	3"	1900	2080	767	178	1228	1200	915	600	627	545

*Remote cabinet

DIMENSIONS - ALTI-NEXIS V SERIES - CCFC VERSION

TYPE	Ø	H	L	P	H1	H2	X	P1	LS	Mass	
	pipes	mm	mm	mm	mm	mm	mm	mm	mm	Brute	Net
4 PUMPS											
ALTI-NEXIS-V1013/K-4-CC-16-T4-FC-01*	3"	1900	2080	767	178	1303	1200	915	600	631	549
ALTI-NEXIS-V1015/K-4-CC-16-T4-FC-01*	3"	1900	2080	767	178	1378	1200	915	600	639	557
ALTI-NEXIS-V1603/K-4-CC-16-T4-FC-01	DN100	1870	1200	816	178	867	1200	1036	–	393	328
ALTI-NEXIS-V1604/K-4-CC-16-T4-FC-01	DN100	1870	1200	816	178	952	1200	1036	–	413	348
ALTI-NEXIS-V1605/K-4-CC-16-T4-FC-01	DN100	1670	1800	816	178	1046	1200	1036	–	594	429
ALTI-NEXIS-V1606/K-4-CC-16-T4-FC-01	DN100	1670	1800	816	178	1096	1200	1036	–	598	432
ALTI-NEXIS-V1607/K-4-CC-16-T4-FC-01*	DN100	1900	1200	816	178	1173	1200	1036	600	660	578
ALTI-NEXIS-V1608/K-4-CC-16-T4-FC-01*	DN100	1900	1200	816	178	1223	1200	1036	600	668	586
ALTI-NEXIS-V1609/K-4-CC-16-T4-FC-01*	DN100	1900	2080	816	213	1460	2000	1036	600	857	684
ALTI-NEXIS-V1610/K-4-CC-16-T4-FC-01*	DN100	1900	2080	816	213	1610	2000	1036	600	865	692
ALTI-NEXIS-V1611/K-4-CC-16-T4-FC-01*	DN100	1900	2080	816	213	1610	2000	1036	600	869	696

*Remote cabinet

ALTI-NEXIS V

DIMENSIONS - ALTI-NEXIS V SERIES - CCFC VERSION

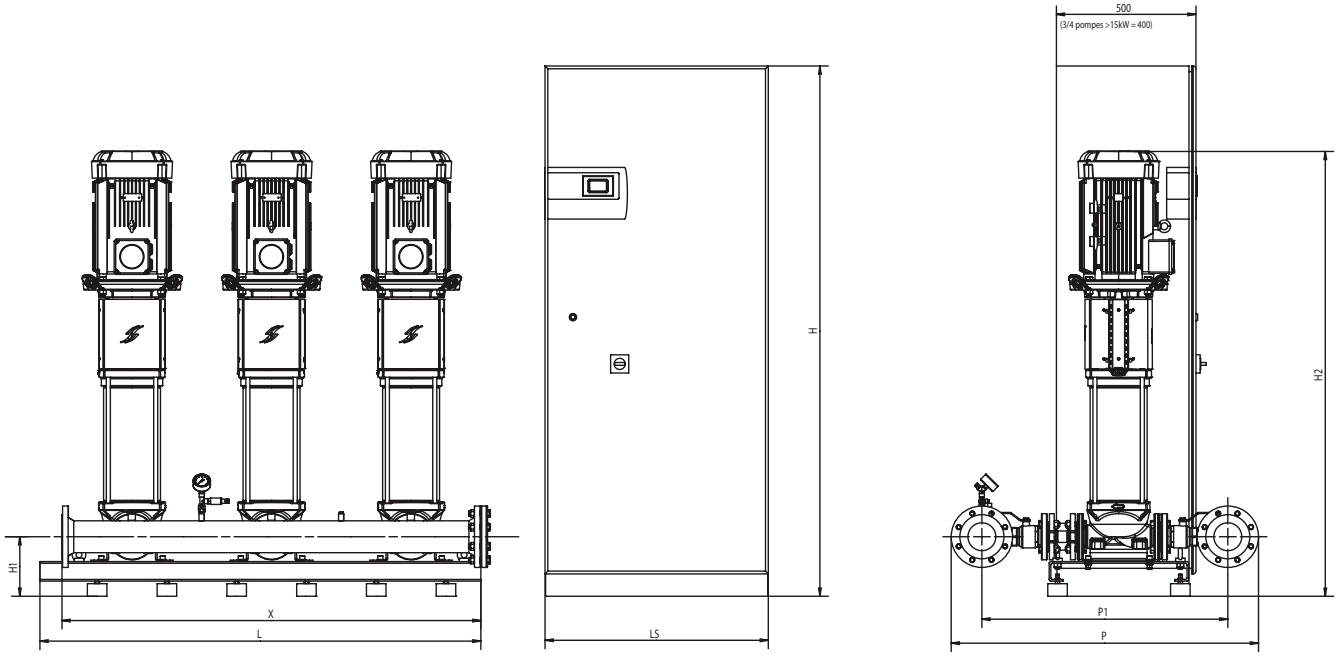

TYPE	Ø	H	L	P	H1	H2	X	P1	LS	Mass	
	pipes	mm	mm	mm	mm	mm	mm	mm	mm	Brute	Net
2 PUMPS											
ALTI-NEXIS-V2202/K-2-CC-16-T4-FC-03	3"	1905	1080	955	213	967	1000	850	–	359	299
ALTI-NEXIS-V2203/K-2-CC-16-T4-FC-03	3"	1705	1080	955	213	1060	1000	850	–	372	312
ALTI-NEXIS-V2204/K-2-CC-16-T4-FC-03*	3"	1900	1080	955	213	1251	1000	850	600	532	469
ALTI-NEXIS-V2205/K-2-CC-16-T4-FC-03*	3"	1900	1080	955	213	1336	1000	850	600	549	486
ALTI-NEXIS-V2206/K-2-CC-16-T4-FC-03*	3"	1900	1080	955	213	1386	1000	850	600	553	490
ALTI-NEXIS-V2207/K-2-CC-16-T4-FC-03*	3"	1900	1080	955	213	1436	1000	850	600	577	514
ALTI-NEXIS-V2208/K-2-CC-16-T4-FC-03*	3"	1900	1080	955	213	1597	1000	850	600	644	581
ALTI-NEXIS-V3602/1/K-2-CC-16-T4-FC-03*	DN100	1900	1080	1288	228	1199	1000	1068	600	588	525
ALTI-NEXIS-V3602/2/K-2-CC-16-T4-FC-03	DN100	1705	1080	1288	228	1058	1000	1068	–	539	473
ALTI-NEXIS-V3602/K-2-CC-16-T4-FC-03*	DN100	1900	1080	1288	228	1199	1000	1068	600	588	525
ALTI-NEXIS-V3603/1/K-2-CC-16-T4-FC-03*	DN100	1900	1080	1288	228	1301	1000	1068	600	608	545
ALTI-NEXIS-V3603/2/K-2-CC-16-T4-FC-03*	DN100	1900	1080	1288	228	1301	1000	1068	600	608	545
ALTI-NEXIS-V3603/K-2-CC-16-T4-FC-03*	DN100	1900	1080	1288	228	1301	1000	1068	600	629	566
ALTI-NEXIS-V3604/2/K-2-CC-16-T4-FC-03*	DN100	1900	1080	1288	228	1478	1000	1068	600	701	638
ALTI-NEXIS-V3604/K-2-CC-16-T4-FC-03*	DN100	1900	1080	1288	228	1478	1000	1068	600	701	638
ALTI-NEXIS-V3605/2/K-2-CC-16-T4-FC-03*	DN100	1900	1080	1288	228	1545	1000	1068	600	733	670
ALTI-NEXIS-V3605/K-2-CC-16-T4-FC-03*	DN100	1900	1080	1288	228	1542	1000	1068	600	733	670
ALTI-NEXIS-V3606/2/K-2-CC-16-T4-FC-03*	DN100	1900	1080	1288	228	1612	1000	1068	600	739	676
ALTI-NEXIS-V3606/K-2-CC-16-T4-FC-03*	DN100	1900	1080	1288	228	1612	1000	1068	800	801	738
ALTI-NEXIS-V5202/2/K-2-CC-16-T4-FC-04*	DN125	1900	1080	1286	263	1301	1000	1036	600	635	572
ALTI-NEXIS-V5202/K-2-CC-16-T4-FC-04*	DN125	1900	1080	1286	263	1301	1000	1036	600	651	588
ALTI-NEXIS-V5203/2/K-2-CC-16-T4-FC-04*	DN125	1900	1080	1286	263	1512	1000	1036	600	742	679
ALTI-NEXIS-V5203/K-2-CC-16-T4-FC-04*	DN125	1900	1080	1286	263	1512	1000	1036	600	742	679
ALTI-NEXIS-V5204/2/K-2-CC-16-T4-FC-04*	DN125	1900	1080	1286	263	1612	1000	1036	600	778	715
ALTI-NEXIS-V5204/K-2-CC-16-T4-FC-04*	DN125	1900	1080	1286	263	1612	1000	1036	600	778	715
ALTI-NEXIS-V5205/2/K-2-CC-16-T4-FC-04*	DN125	1900	1080	1286	263	1712	1000	1036	800	846	783
ALTI-NEXIS-V5205/K-2-CC-16-T4-FC-04*	DN125	1900	1080	1286	263	1712	1000	1036	800	846	783
ALTI-NEXIS-V5206/2/K-2-CC-16-T4-FC-04*	DN125	1900	1080	1286	263	1855	1000	1036	800	902	839

DIMENSIONS - ALTI-NEXIS V SERIES - CCFC VERSION

TYPE	Ø	H	L	P	H1	H2	X	P1	LS	Mass	
	pipes	mm	mm	mm	mm	mm	mm	mm	mm	Brute	Net
3 PUMPS											
ALTI-NEXIS-V2202/K-3-CC-16-T4-FC-03	DN100	1905	1580	1100	213	967	1500	880	–	546	452
ALTI-NEXIS-V2203/K-3-CC-16-T4-FC-03	DN100	1705	1580	1100	213	1060	1500	880	–	566	472
ALTI-NEXIS-V2204/K-3-CC-16-T4-FC-03*	DN100	1900	1580	1100	213	1251	1500	880	600	759	661
ALTI-NEXIS-V2205/K-3-CC-16-T4-FC-03*	DN100	1900	1580	1100	213	1336	1500	880	600	783	685
ALTI-NEXIS-V2206/K-3-CC-16-T4-FC-03*	DN100	1900	1580	1100	213	1386	1500	880	600	788	690
ALTI-NEXIS-V2207/K-3-CC-16-T4-FC-03*	DN100	1900	1580	1100	213	1436	1500	880	800	825	727
ALTI-NEXIS-V2208/K-3-CC-16-T4-FC-03*	DN100	1900	1580	1100	213	1597	1500	880	800	924	826
ALTI-NEXIS-V3602/1/K-3-CC-16-T4-FC-03*	DN125	1900	1580	1343	228	1199	1500	1093	600	891	713
ALTI-NEXIS-V3602/2/K-3-CC-16-T4-FC-03	DN125	1705	1580	1343	228	1058	1500	1093	–	622	528
ALTI-NEXIS-V3602/K-3-CC-16-T4-FC-03*	DN125	1900*	1580	1343	228	1199	1500	1093	600	811	713
ALTI-NEXIS-V3603/1/K-3-CC-16-T4-FC-03*	DN125	1900*	1580	1343	228	1301	1500	1093	600	839	741
ALTI-NEXIS-V3603/2/K-3-CC-16-T4-FC-03*	DN125	1900*	1580	1343	228	1301	1500	1093	600	839	741
ALTI-NEXIS-V3603/K-3-CC-16-T4-FC-03*	DN125	1900*	1580	1343	228	1301	1500	1093	800	870	772
ALTI-NEXIS-V3604/2/K-3-CC-16-T4-FC-03*	DN125	1900*	1580	1343	228	1478	1500	1093	800	978	880
ALTI-NEXIS-V3604/K-3-CC-16-T4-FC-03*	DN125	1900*	1580	1343	228	1478	1500	1093	800	978	880
ALTI-NEXIS-V3605/2/K-3-CC-16-T4-FC-03*	DN125	1900*	1580	1343	228	1545	1500	1093	800	1033	935
ALTI-NEXIS-V3605/K-3-CC-16-T4-FC-03*	DN125	1900*	1580	1343	228	1542	1500	1093	800	1033	935
ALTI-NEXIS-V3606/2/K-3-CC-16-T4-FC-03*	DN125	1900*	1580	1343	228	1612	1500	1093	800	1042	944
ALTI-NEXIS-V3606/K-3-CC-16-T4-FC-03*	DN125	1900*	1580	1343	228	1612	1500	1093	1000	1113	1015
ALTI-NEXIS-V5202/2/K-3-CC-16-T4-FC-04*	DN150	1900*	1580	1351	263	1301	1500	1066	600	886	788
ALTI-NEXIS-V5202/K-3-CC-16-T4-FC-04*	DN150	1900*	1580	1351	263	1301	1500	1066	600	908	810
ALTI-NEXIS-V5203/2/K-3-CC-16-T4-FC-04*	DN150	1900*	1580	1351	263	1512	1500	1066	800	1044	946
ALTI-NEXIS-V5203/K-3-CC-16-T4-FC-04*	DN150	1900*	1580	1351	263	1512	1500	1066	800	1044	946
ALTI-NEXIS-V5204/2/K-3-CC-16-T4-FC-04*	DN150	1900*	1580	1351	263	1612	1500	1066	800	1105	1007
ALTI-NEXIS-V5204/K-3-CC-16-T4-FC-04*	DN150	1900*	1580	1351	263	1612	1500	1066	800	1105	1007
ALTI-NEXIS-V5205/2/K-3-CC-16-T4-FC-04*	DN150	1900*	1580	1351	263	1712	1500	1066	1000	1185	1087
ALTI-NEXIS-V5205/K-3-CC-16-T4-FC-04*	DN150	1900*	1580	1351	263	1712	1500	1066	1000	1185	1087
ALTI-NEXIS-V5206/2/K-3-CC-16-T4-FC-04*	DN150	1900*	1580	1351	263	1855	1500	1066	1000	1265	1167
4 PUMPS											
ALTI-NEXIS-V2202/K-4-CC-16-T4-FC-03	DN125	1905	2080	1160	213	967	2000	910	–	721	591
ALTI-NEXIS-V2203/K-4-CC-16-T4-FC-03	DN125	1705	2080	1160	213	1060	2000	910	–	749	619
ALTI-NEXIS-V2204/K-4-CC-16-T4-FC-03*	DN125	1900	2080	1160	213	1251	2000	910	600	974	838
ALTI-NEXIS-V2205/K-4-CC-16-T4-FC-03*	DN125	1900	2080	1160	213	1336	2000	910	600	1006	870
ALTI-NEXIS-V2206/K-4-CC-16-T4-FC-03*	DN125	1900	2080	1160	213	1386	2000	910	600	1013	877
ALTI-NEXIS-V2207/K-4-CC-16-T4-FC-03*	DN125	1900	2080	1160	213	1436	2000	910	800	1050	914
ALTI-NEXIS-V2208/K-4-CC-16-T4-FC-03*	DN125	1900	2080	1160	213	1597	2000	910	800	1184	1048
ALTI-NEXIS-V3602/1/K-4-CC-16-T4-FC-03*	DN150	1900	2080	1397	228	1199	2000	1112	600	1044	908
ALTI-NEXIS-V3602/2/K-4-CC-16-T4-FC-03	DN150	1705	2080	1397	228	1058	2000	1112	–	824	694
ALTI-NEXIS-V3602/K-4-CC-16-T4-FC-03*	DN150	1900	2080	1397	228	1199	2000	1112	600	1044	908
ALTI-NEXIS-V3603/1/K-4-CC-16-T4-FC-03*	DN150	1900	2080	1397	228	1301	2000	1112	600	1081	945
ALTI-NEXIS-V3603/2/K-4-CC-16-T4-FC-03*	DN150	1900	2080	1397	228	1301	2000	1112	600	1081	945
ALTI-NEXIS-V3603/K-4-CC-16-T4-FC-03*	DN150	1900	2080	1397	228	1301	2000	1112	800	1111	975
ALTI-NEXIS-V3604/2/K-4-CC-16-T4-FC-03*	DN150	1900	2080	1397	228	1478	2000	1112	800	1256	1120
ALTI-NEXIS-V3604/K-4-CC-16-T4-FC-03*	DN150	1900	2080	1397	228	1478	2000	1112	800	1256	1120
ALTI-NEXIS-V3605/2/K-4-CC-16-T4-FC-03*	DN150	1900	2080	1397	228	1545	2000	1112	800	1326	1190
ALTI-NEXIS-V3605/K-4-CC-16-T4-FC-03*	DN150	1900	2080	1397	228	1542	2000	1112	800	1326	1190
ALTI-NEXIS-V3606/2/K-4-CC-16-T4-FC-03*	DN150	1900	2080	1397	228	1612	2000	1112	800	1338	1202
ALTI-NEXIS-V3606/K-4-CC-16-T4-FC-03*	DN150	1900	2080	1397	228	1612	2000	1112	1000	1421	1285
ALTI-NEXIS-V5202/2/K-4-CC-16-T4-FC-04*	DN200	1900	2080	1456	263	1301	2000	1116	600	1145	1009
ALTI-NEXIS-V5202/K-4-CC-16-T4-FC-04*	DN200	1900	2080	1456	263	1301	2000	1116	600	1174	1038
ALTI-NEXIS-V5203/2/K-4-CC-16-T4-FC-04*	DN200	1900	2080	1456	263	1512	2000	1116	800	1345	1209
ALTI-NEXIS-V5203/K-4-CC-16-T4-FC-04*	DN200	1900	2080	1456	263	1512	2000	1116	800	1345	1209
ALTI-NEXIS-V5204/2/K-4-CC-16-T4-FC-04*	DN200	1900	2080	1456	263	1612	2000	1116	800	1423	1287
ALTI-NEXIS-V5204/K-4-CC-16-T4-FC-04*	DN200	1900	2080	1456	263	1612	2000	1116	800	1423	1287
ALTI-NEXIS-V5205/2/K-4-CC-16-T4-FC-04*	DN200	1900	2080	1456	263	1712	2000	1116	1000	1518	1382
ALTI-NEXIS-V5205/K-4-CC-16-T4-FC-04*	DN200	1900	2080	1456	263	1712	2000	1116	1000	1518	1382
ALTI-NEXIS-V5206/2/K-4-CC-16-T4-FC-04*	DN200	1900	2080	1456	263	1855	2000	1116	1000	1623	1488

*Remote cabinet

ALTI-NEXIS V

ACCESSORIES

- Water supply by-pass, for direct connection to the mains water supply.

Can be used on booster pumps fitted with the CE+ switch box only.
(for other switch boxes, contact us for further details.

- BY-PASS-1“1/2-ALTI-NEXIS-4M3
  Item no. 4173393
- BY-PASS-2“-ALTI-NEXIS-4-6M3
  Item no. 4173394
- BY-PASS-2“1/2-ALTI-NEXIS-6M3
  Item no. 4173395
- BY-PASS-2“1/2-ALTI-NEXIS-10-16M3
  Item no. 4173746
- BY-PASS-3“-ALTI-NEXIS-10-16M3
  Item no. 4173396
- BY-PASS-DN100-ALTI-NEXIS-16M3
  Item no. 4173397

- Vibration damping rubber sleeves
- Pressure regulators
- Isolating valves
- Kit to protect against low water levels (mains supply)
- Kit to protect against low water levels (from tank)
- Back flange kit, stainless steel (sold in pairs)
- Plug kit for stainless steel pipes
- Plug kit for pipes electro-galvanised steel
- 8-litre to 500-litre bladder tank



• Isolating valve



• Plug for stainless steel pipes



• Vibration-damping sleeves

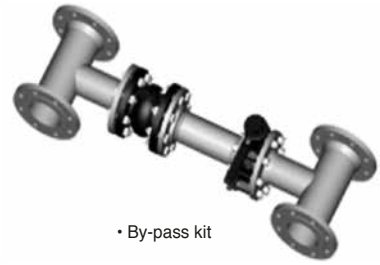

• By-pass kit



• Kit Protection against low water levels (mains supply)



• Back flange kit



• Pressure regulators

SPECIAL FEATURES

a) Assembly

– On a flat surface, booster pump placed on vibration absorbing feet.
– Intake and outlet pipes can be connection either on the right or on the left.
– separately installed switch board depending on the rating.
– one metre of free space must be left around the booster pump to ensure complete safety.

b) Packaging

On pallet.

ALTI-NEXIS VE

HIGH EFFICIENCY BOOSTER PUMPS

Range of booster pumps fitted with stainless steel multistage pumps Nexis VE with electronic integrated speed control: Small institutions and industrial use 2 poles - 50/60 Hz

RANGE OF APPLICATION

Flows up to:	**320 m³/h**
Manometric head up to:	**250 m CE**
Maximum working pressure:	**25 bar**
Maximum water temperature:	**70°C**
Ambient temperature:	**40°C**

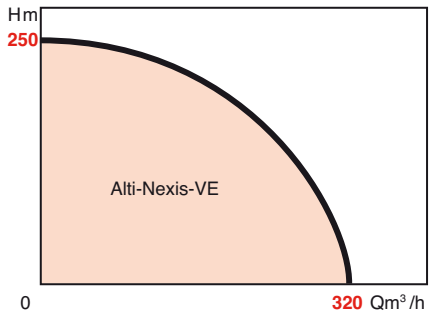

APPLICATIONS

Creating and maintaining the pressure level of water supply systems with low or nonexistent pressure, for:

- housing complexes, office blocks,
- private homes,
- hotels, hospitals, clinics,
- shopping centres, shops,
- primary schools, secondary schools, universities, army barracks,
- industrial and agricultural buildings,
- irrigation, watering etc…

ADVANTAGES

- **Booster pump available as standard for up to 4 pumps.**
- **The continuous adjustment of the pump rotation speed depending on the demand for pressure saves energy and gives quiet running.**
- **Integral frequency changers in the pumps create compact modules.**
- **Versatile use, smoother running and less water hammer.**
- **Convenient to install and use because of the module's easy application and operation.**
- **Stainless steel pipes, protection against corrosion and longer life.**
- **Booster pump certified for use with drinking water: Certificate of Sanitary Conformity (ACS).**

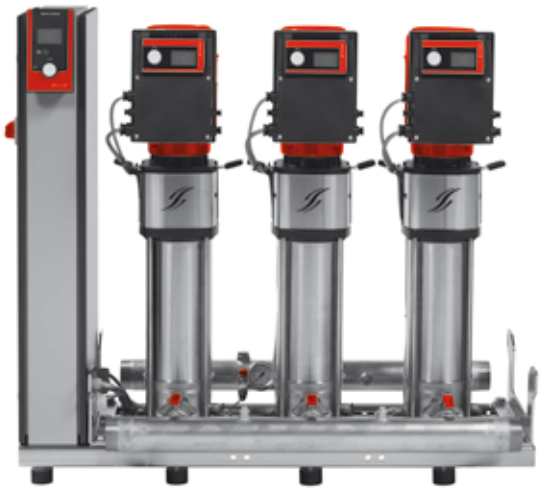

• Alti-Nexis-VE608 S var-2-3-4

ErP ENERGY-RELATED PRODUCTS CERTIFIED BY SALMSON®

Certified ACS

EVS

ALTI-NEXIS VE

DESIGN

• ALTi-Nexis VE Range

Compact booster pumps, designed for direct or standard boosting systems fitted with:

- 2 to 4 Nexis VE pumps, with pre-set hydraulic features.
- Nexis VE22 to VE52 pumps with front access to the mechanical seal for easier maintenance.
- Nexis VE4 to VE16 pumps without standard cartridge on the booster pumps fitted with SCe switch box
- Nexis VE4 to VE16 pumps with standard cartridge on the booster pumps fitted with CCe switch box (contact us for further details)
- Valves on the outlet and intake of each pump.
- Quiet-running non-return valve on the outlet of each pump (fitted with interchangeable cartridges on the ALTi Nexis-VE range up to 16m3/h).
- A pressure transmitter to control the pumps.
- A low water level pressure switch (compulsory accessory - for connections to the mains water supply).
- Low water level float switch (compulsory accessory - for connections to a storage tank).
- Pressure gauge on the outlet.
- Supporting frame mounted on vibration absorbing adjustable feet.
- Lifting rings on the pump and on frame (screw-in rings on booster pumps fitted with logic controller system CCe; built-in rings on SCe switch boxes).
- A switch box with integral PID microcontroller and control display:
  SCe: advanced electronics unit
  CCe programmable logic controller
- Screwed and glued assembly valves and butterfly valves on the pipes for the 16, 22 and 36m³/h versions
- Flange connections for valves and flap valves on pipes for the 52m³/h versions

On request (contact us for further details):

- ELiNOX version: 316 stainless steel version
- Booster pump for 5 pumps or more, jockey pumps.

IDENTIFICATION

ALTI-NEXIS - VE 2205/2/K - 5,5 - 2 SCe - 16 - T4

Version
Alti-NEXIS: Standard version

Type of pump:
VE: Electronic vertical pump.

Nominal flow and number of adjustable speeds for each pump / number of trimmed impellers / cartridge
4 m³/h : NEXIS-VE pump
6 m³/h : NEXIS-VE pump
10 m³/h : NEXIS-VE pump
16 m³/h : NEXIS-VE pump
22 m³/h : NEXIS-VE pump
36 m³/h : NEXIS-VE pump
52 m³/h : NEXIS-VE pump
} K : pompe avec cartouche

Motor rating for pumps only when there are two motor ratings for a given number of adjustable pump speeds

Module's mode of operation
2 : 2 pumps in cascade
3 : 3 pumps in cascade
4 : 4 pumps in cascade

Logic controller system :
SCe : Advanced electronic controls
CCe : Programmable logic controller

Maximum working pressure : 16 - 25 bars

Three phase current: T4: TRI 400 V

STANDARDS AND SPECIFICATIONS

- **Complies with European Marking Directives CE:**
  - Directive on Machinery 2006/42/CE and Low Voltage Directive 2006/95/CE
  - Electromagnetic Compatibility Directive(EMC) 2004/108/CE
  And with the appropriate harmonised European standards (HEN):
  EN ISO 12100, EN 60204-1, EN 61000-6-1, EN 61000-6-2, EN 61000-6-3, EN 61000-6-4
- **Certified for use with drinking water: Certificate of Sanitary Conformity (ACS)**
- **Appropriate for Electrical Installations in buildings: IEC 60364-1 or its French version NF C 15-100**
- **Pumps comply with:**
  - Regulation 547/2012/UE on the hydraulic efficiency of water pumps, and Energy related Products (ErP) Directives 2009/125/CE: MEI≥0.70
  - Regulation 640/2009/CE on the efficiency of three-phase electric motors (from 0.75 to 375 kW), from the ErP Directive: IE2 or more.
  - The Machinery Directives and with the HEN standard for pumps: EN 809+A1
- **Switch boxes comply with:**
  - The Low Voltage Directive and the HEN standards: EN 61439-1 & EN 61439-2
  - The EMC Directive and the HEN standards: EN 61000-6-1, EN 61000-6-2, EN 61000-6-3, EN 61000-6-4

DESCRIPTION OF THE BOOSTER PUMP

• ALTi-NEXIS VE

1 - SCe Switch box
2 - Pumps (NEXIS VE type)
3 - Intake pipe
4 - Outlet pipe
5 - Non-return valve
6 - Isolating valves
7 - Pressure gauge with bleeder and pressure transmitter
8 - Vibration absorbing adjustable feet

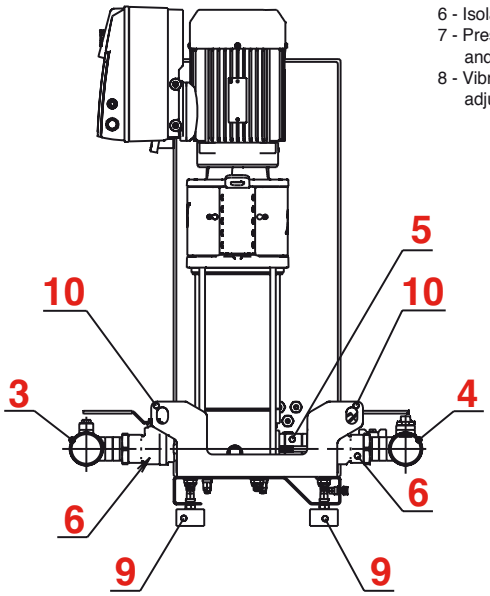

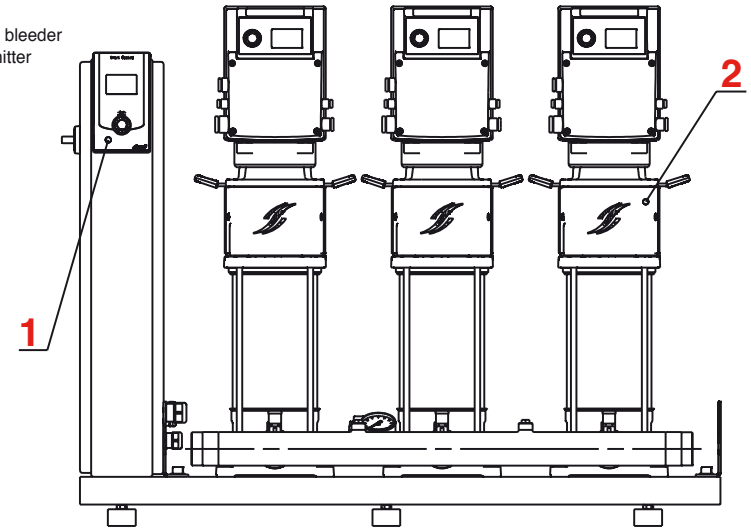

BASIC CONSTRUCTION

	Alti-Nexis VE with SCe Switch box						
Nexis VE pump	4	6	10	16	22	36	52
	Fitted with mechanical seal without cartridge						
Non-return valves	Butterfly valve (low loss of pressure)						
	Interchangeable cartridges				-		
Shut-off valve	Full bore ball valve						butterfly
	quarter turn						
Pipes	304 grade stainless steel						
Valve/ pipe assembly	Screwed + O-ring seal						
8-litre bladder tank on the outlet pipe	Supplied as an option*						

* a reservoir must be installed close to the booster pump for optimum operation. Its capacity must be suitable for the installation

COMPULSORY ACCESSORIES DEPENDING ON THE TYPE OF WATER SUPPLY

		ALTi-Nexis VE		
	Components	2 pumps	3 pumps	4 pumps
Protection against low water levels	Pressure switch (connected to the mains water supply)	1	1	1
	Float (connected to a tank)	1	1	1

ALTI-NEXIS VE

DESCRIPTION OF THE BOOSTER PUMP

• **ALTi-NEXIS VE**

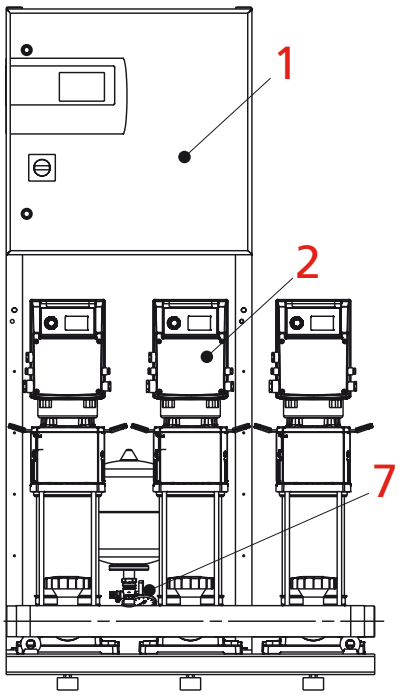

1 - CCE Switch box
2 - Pumps (NEXIS VE type)
3 - Intake pipe
4 - Outlet pipe
5 - Non-return valve
6 - Isolating valves
7 - Pressure gauge with bleeder and pressure transmitter
8 - Vibration absorbing adjustable feet
9 - 8-litre bladder tank

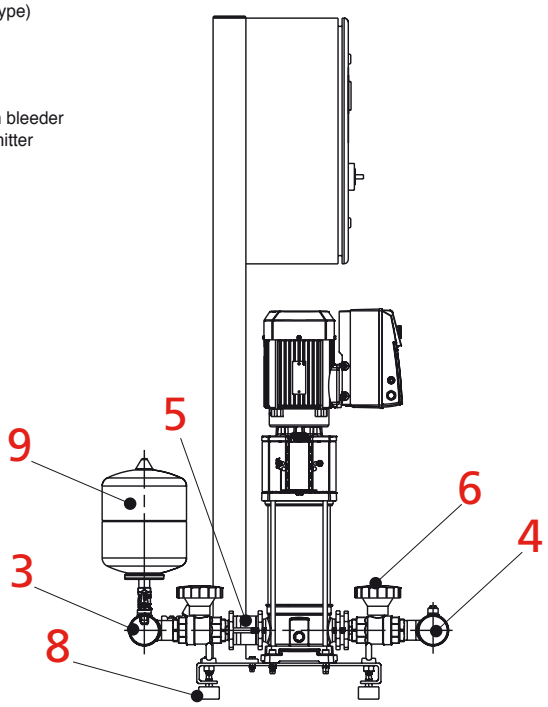

BASIC CONSTRUCTION

	Alti-Nexis VE with CCe Switch box (contact us for further details)						
Nexis VE pump	4	6	10	16	22	36	52
	fitted with mechanical seal to standard cartridge						
Non-return valves	Butterfly valve (low loss of pressure)						
	interchangeable cartridges				-		
Isolating valves	full bore ball valve						butterfly
	geared handle					quarter turn	
Pipes	316 grade stainless steel						
Valve / pipe assembly	Screwed + O-ring seal						Seal + flange
8-litre bladder tank on the outlet pipe	Supplied as standard						

COMPULSORY ACCESSORIES DEPENDING ON THE TYPE OF WATER SUPPLY

		ALTi-Nexis VE		
	Components	2 pumps	3 pumps	4 pumps
Protection against low water levels	Pressure switch (connected to the mains water supply)	1	1	1
	Float (connected to tank)	1	1	1

COMPONENTS

• **Example for a 3-pump ALTI-Nexis. The same settings for an ALTI-Nexis with 2 or 4 pumps.**

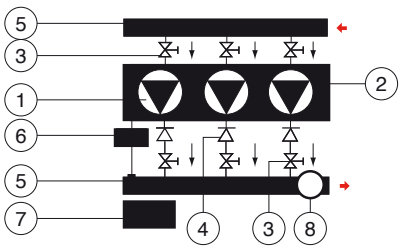

• **From the mains water supply**

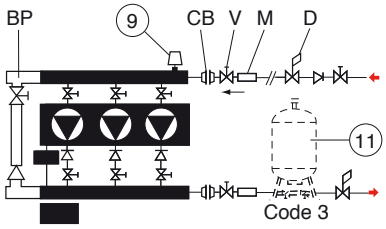

• **From a storage tank (under pressure)**

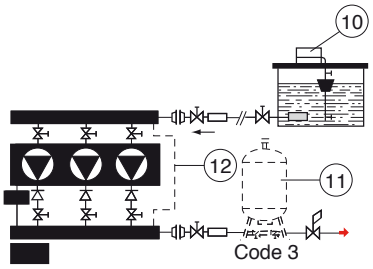

SUPPLIED AS STANDARD (1 to 8) :

1 - Two, three or four multistage pumps.
2 - Frame support.
3 - Isolating valves at the intake and outlet of the pumps.
4 - Non-return valves at the outlet of the pumps.
5 - Intake-outlet pipes.
6 - Pressure transmitter for pump controls.
7 - Control and protection cabinet.
8 - 8-litre bladder tank on the versions fitted with CCe switch box

COMPULSORY COMPONENTS :

(depending on the water supply to the booster pump)

9 - Pressure switch to warn against low water levels, booster pump fed from the mains water supply. Or
10 - Float switch, delivered unmounted, booster pump fed from tank under pressure.
11 - Eight- to 2000-litre bladder tank, state max. operating pressure and capacity (optional for an extra charge)
12 - Balance pipe for tank intake.

Note: When a by-pass and a pressure reducing valve are installed on the intake to the booster pump, you are advised to install the pressure reducing valve between the by-pass and the booster pump

OPTIONAL COMPONENTS :

(options en supplément de prix)

- By-pass for direct water supply, when the mains supply pressure is adequate.
- Vibration damping rubber sleeves (supplied in pairs).
- Back flanges to be screwed or soldered onto pipes (supplied in pairs) depending on the size of the pipes.
- Pressure reducing valve-pressure regulator on intake and/or outlet.
- Isolating valves.

ALTI-NEXIS VE

SCE CONTROL SWITCH BOARD (VARIABLE SPEED)

Switch box with integral logic controller

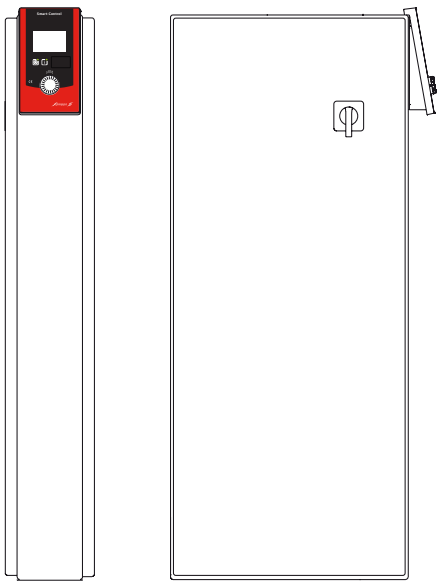

3~ supply : 230/400V (50 Hz)
220 /380 V (optional 60 Hz)

DESCRIPTION

On the front:

- Back-lit LCD control and viewing screen.
- LEDs showing power is on to the booster pump and a general fault.
- Browse button for selecting and altering the setting of the installation.
- Isolating knob for safety and to turn on power

Inside:

- Thermal magnetic circuit breaker with slider for adjusting current strength to the motor (and reset button).
- Safety and insulating transformer.
- General isolating switch with lockable handle for external controls.
- A logic controller fitted with a microprocessor for full control of the booster pump (starts, stops, protections...).
- A terminal-block for the power supply (General supply, motors).
- external controls terminal block (pressure transmitter, float switch or pressure safety switch, etc..).
- a document holder built into the door.

OPERATION :

The pressure transmitter records the existing pressure in the outlet pipe and sends signals to the switch box that controls the starts and stops of pumps in cascade, and also their rotation speed.

Features of the switch box:

- ability to designate a reserve pump.
- function test for pumps.
- configurable low water level alarm.
- setting of delay times for starting and stopping the pump.
- setting of delay times for starting and stopping the pump.
- remote control for stopping (BUS connection required).
- adjustment of starting and stopping thresholds for each pump.
- adjustable remote setting.
- 2 speeds for filling pipes, for greater safety.
- Bus communication with supervision system (Bacnet, Modbus) (optional).
- ability to reset the behaviour of the booster after an alarm.
- operating statistics.
- various ways of configuring cyclical changeover between the main pumps and back-up pumps (timer, number of starts).
- 2 menus: easy menu for simple and fast start-up and expert menu to access all parameters.
- selection of Auto, Manual and Stop mode for each pump.

Control panel

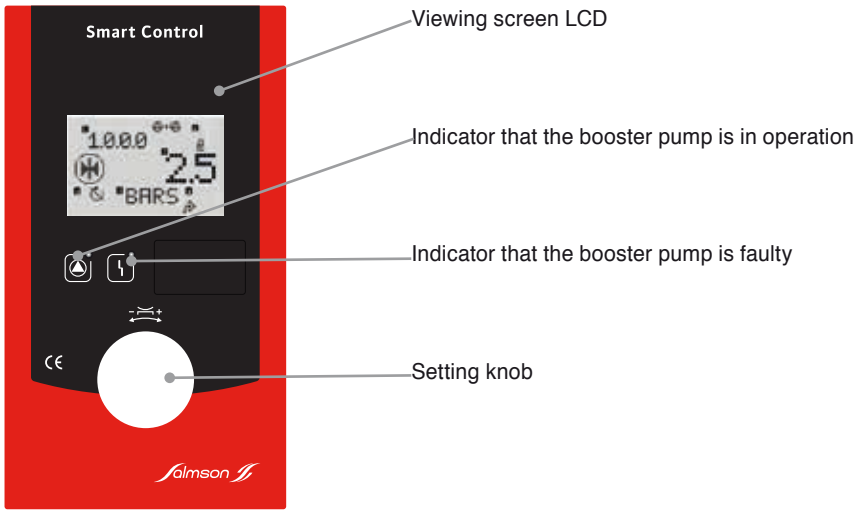

SCE CONTROL SWITCH BOARD (VARIABLE SPEED) (please consult us)

Switch box with programmable logic controller

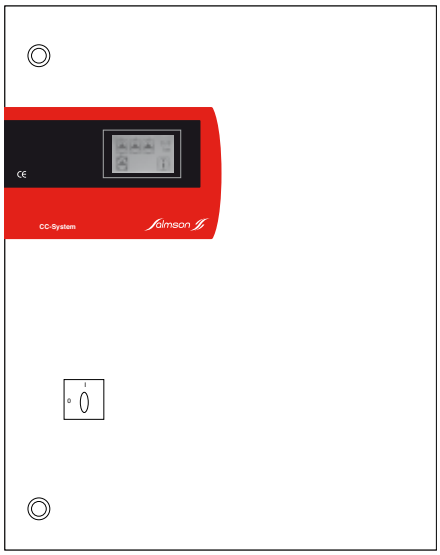

3~ supply: 230/400V (50 Hz)
220 /380 V (60 Hz-option)

DESCRIPTION

On the front :

- Back-lit LCD touch screen screen for control and viewing.
- Locks.
- Safety isolating and power-up knob.

Inside:

- Thermal magnetic circuit breaker with slider for adjusting current strength to the motor (and reset button).
- Two contacts for each pump (one for fixed speed and one for variable speed on CCFC version).
- Safety and insulating transformer.
- General isolating switch with lockable handle for external controls.
- Three-position switch Auto/Stop/Manual for each pump.
- A Programmable logic controller (PLC).
- A speed controller (version CCFC).
- A motor filter (version CCFC).
- A inlet filter card.
- A power connection terminal block (general supply, motors).
- A terminal block for external controls (pressure transmitter, float switch or pressure safety switch, remote controls etc.).

FONCTIONNEMENT :

The pressure transmitter records the existing pressure in the outlet pipe and sends signals to the programmable logic controller.
If the pressure becomes lower than the value of setting, the regulator sends a message to the pressure controller to increase the speed of the pump being used, referred to as “controlled”.

If the controlled pump has reached its maximum rotation speed but the pressure is still too low, the logic controller cuts-in pump P2 at a fixed speed; P1’s speed adjusts to maintain the selected setting. If the combined flow of P1 and P2 is not sufficient, then P3 and P4 are cut in successively.
If the pressure becomes too high, the logic controller adjusts P1 to the minimum selected speed, and if the pressure is still too high, it stops the last fixed-speed pump to be cut in. Then, P1 is returned to its maximum speed before being reduced to the minimum speed, then the last-but-one pump is stepped down to a fixed speed (where necessary), and so on until the required setting is reached.
At the end of the cycle, if there is no more demand, the logic controller will detect that there is now no flow and will cut out pump P1.

Note :

On all booster pump models (2 to 4 pumps), the starting order of the pumps changes after each stop, or after a adjustable time or after an adjustable operating period.

Control panel



Touch viewing and settings screen

ALTI-NEXIS VE

ELECTRICAL CHARACTERISTIC AT 2900 TR/MIN

TYPE	Total installed motor power P2		Max. operating pressure	Voltage	I total 2 pumps	I total 3 pumps	I total 4 pumps	Voltage	I total 2 pumps	I total 3 pumps	I total 4 pumps
	kW		bar		A	A	A		A	A	A
ALTI-NEXIS-VE403-2 or 3 or 4 pumps...-16-T3	2, 3 or 4x	0,55	16	400V-3-50Hz	3,4	5,1	6,8	380V-3-60Hz	3,6	5,4	7,2
ALTI-NEXIS-VE404-2 or 3 or 4 pumps...-16-T3	2, 3 or 4x	0,75	16	400V-3-50Hz	6,4	9,6	12,8	380V-3-60Hz	6,8	10,2	13,6
ALTI-NEXIS-VE405-2 or 3 or 4 pumps...-16-T4	2, 3 or 4x	1,1	16	400V-3-50Hz	6,4	9,6	12,8	380V-3-60Hz	6,4	9,6	12,8
ALTI-NEXIS-VE407-2 or 3 or 4 pumps...-16-T4	2, 3 or 4x	1,5	16	400V-3-50Hz	11,2	16,8	22,4	380V-3-60Hz	11,6	17,4	23,2
ALTI-NEXIS-VE410-2 or 3 or 4 pumps...-16-T4	2, 3 or 4x	2,2	16	400V-3-50Hz	11,2	16,8	22,4	380V-3-60Hz	11,4	17,1	22,8
ALTI-NEXIS-VE602-2 or 3 or 4 pumps...-16-T4	2, 3 or 4x	0,75	16	400V-3-50Hz	6,4	9,6	12,8	380V-3-60Hz	6,8	10,2	13,6
ALTI-NEXIS-VE603-2 or 3 or 4 pumps...-16-T4	2, 3 or 4x	1,1	16	400V-3-50Hz	6,4	9,6	12,8	380V-3-60Hz	6,4	9,6	12,8
ALTI-NEXIS-VE604-2 or 3 or 4 pumps...-16-T4	2, 3 or 4x	1,5	16	400V-3-50Hz	11,2	16,8	22,4	380V-3-60Hz	11,6	17,4	23,2
ALTI-NEXIS-VE606-2 or 3 or 4 pumps...-16-T4	2, 3 or 4x	2,2	16	400V-3-50Hz	11,2	16,8	22,4	380V-3-60Hz	11,4	17,1	22,8
ALTI-NEXIS-VE608-2 or 3 or 4 pumps...-16-T4	2, 3 or 4x	3	16	400V-3-50Hz	18	27	36	380V-3-60Hz	18,6	27,9	37,2
ALTI-NEXIS-VE611-2 or 3 or 4 pumps...-16-T4	2, 3 or 4x	4	16	400V-3-50Hz	19,4	29,1	38,8	380V-3-60Hz	19,8	29,7	39,6
ALTI-NEXIS-VE1002-2 or 3 or 4 pumps...-16-T4	2, 3 or 4x	1,1	16	400V-3-50Hz	6,4	9,6	12,8	380V-3-60Hz	6,4	9,6	12,8
ALTI-NEXIS-VE1003-2 or 3 or 4 pumps...-16-T4	2, 3 or 4x	1,5	16	400V-3-50Hz	11,2	16,8	22,4	380V-3-60Hz	11,6	17,4	23,2
ALTI-NEXIS-VE1004-2 or 3 or 4 pumps...-16-T4	2, 3 or 4x	2,2	16	400V-3-50Hz	11,2	16,8	22,4	380V-3-60Hz	11,4	17,1	22,8
ALTI-NEXIS-VE1005-2 or 3 or 4 pumps...-16-T4	2, 3 or 4x	3	16	400V-3-50Hz	18	27	36	380V-3-60Hz	18,6	27,9	37,2
ALTI-NEXIS-VE1006-2 or 3 or 4 pumps...-16-T4	2, 3 or 4x	4	16	400V-3-50Hz	19,4	29,1	38,8	380V-3-60Hz	19,8	29,7	39,6
ALTI-NEXIS-VE1009-2 or 3 or 4 pumps...-16-T4	2, 3 or 4x	5,5	16	400V-3-50Hz	22	33	44	380V-3-60Hz	23	34,5	46
ALTI-NEXIS-VE1602-2 or 3 or 4 pumps...16-T4	2, 3 or 4x	2,2	16	400V-3-50Hz	11,2	16,8	22,4	380V-3-60Hz	11,4	17,1	22,8
ALTI-NEXIS-VE1603-3,0-2 or 3 or 4 pumps...16-T4	2, 3 or 4x	3	16	400V-3-50Hz	18	27	36	380V-3-60Hz	18,6	27,9	37,2
ALTI-NEXIS-VE1603-4,0-2 or 3 or 4 pumps...16-T4	2, 3 or 4x	4	16	400V-3-50Hz	19,4	29,1	38,8	380V-3-60Hz	19,8	29,7	39,6
ALTI-NEXIS-VE1605-2 or 3 or 4 pumps...16-T4	2, 3 or 4x	5,5	16	400V-3-50Hz	22	33	44	380V-3-60Hz	23	34,5	46
ALTI-NEXIS-VE1606-2 or 3 or 4 pumps...16-T4	2, 3 or 4x	7,5	16	400V-3-50Hz	28,6	42,9	57,2	380V-3-60Hz	29,2	43,8	58,4
ALTI-NEXIS-VE2203-2 or 3 or 4 pumps...16-T4	2, 3 or 4x	5,5	16	400V-3-50Hz	22	33	44	380V-3-60Hz	23	34,5	46
ALTI-NEXIS-VE2204-2 or 3 or 4 pumps...16-T4	2, 3 or 4x	7,5	16	400V-3-50Hz	28,6	42,9	57,2	380V-3-60Hz	29,2	43,8	58,4
ALTI-NEXIS-VE2205-2 or 3 or 4 pumps...16-T4	2, 3 or 4x	11	16	400V-3-50Hz	42,2	63,3	84,4	380V-3-60Hz	40,6	60,9	81,2
ALTI-NEXIS-VE2207-2 or 3 or 4 pumps...25-T4	2, 3 or 4x	15	25	400V-3-50Hz	61,2	91,8	122,4	380V-3-60Hz	59,6	89,4	119,2
ALTI-NEXIS-VE2208-2 or 3 or 4 pumps...25-T4	2, 3 or 4x	18,5	25	400V-3-50Hz	65,6	98,4	131,2	380V-3-60Hz	64,2	96,3	128,4
ALTI-NEXIS-VE2209-2 or 3 or 4 pumps...25-T4	2, 3 or 4x	22	25	400V-3-50Hz	76,6	114,9	153,2	380V-3-60Hz	75	112,5	150
ALTI-NEXIS-VE3602-5,5-2 or 3 or 4 pumps...16-T4	2, 3 or 4x	5,5	16	400V-3-50Hz	22	33	44	380V-3-60Hz	23	34,5	46
ALTI-NEXIS-VE3602-7,5-2 or 3 or 4 pumps...16-T4	2, 3 or 4x	7,5	16	400V-3-50Hz	28,6	42,9	57,2	380V-3-60Hz	29,2	43,8	58,4
ALTI-NEXIS-VE3604-2 or 3 or 4 pumps...16-T4	2, 3 or 4x	11	16	400V-3-50Hz	42,2	63,3	84,4	380V-3-60Hz	40,6	60,9	81,2
ALTI-NEXIS-VE3605-2 or 3 or 4 pumps...16-T4	2, 3 or 4x	15	16	400V-3-50Hz	61,2	91,8	122,4	380V-3-60Hz	59,6	89,4	119,2
ALTI-NEXIS-VE3607-2 or 3 or 4 pumps...25-T4	2, 3 or 4x	18,5	25	400V-3-50Hz	65,6	98,4	131,2	380V-3-60Hz	64,2	96,3	128,4
ALTI-NEXIS-VE3608-2 or 3 or 4 pumps...25-T4	2, 3 or 4x	22	25	400V-3-50Hz	76,6	114,9	153,2	380V-3-60Hz	75	112,5	150
ALTI-NEXIS-VE5202-2 or 3 or 4 pumps...16-T4	2, 3 or 4x	7,5	16	400V-3-50Hz	28,6	42,9	57,2	380V-3-60Hz	29,2	43,8	58,4
ALTI-NEXIS-VE5203-2 or 3 or 4 pumps...16-T4	2, 3 or 4x	11	16	400V-3-50Hz	42,2	63,3	84,4	380V-3-60Hz	40,6	60,9	81,2
ALTI-NEXIS-VE5204-2 or 3 or 4 pumps...16-T4	2, 3 or 4x	15	16	400V-3-50Hz	61,2	91,8	122,4	380V-3-60Hz	59,6	89,4	119,2
ALTI-NEXIS-VE5205-2 or 3 or 4 pumps...16-T4	2, 3 or 4x	18,5	16	400V-3-50Hz	65,6	98,4	131,2	380V-3-60Hz	64,2	96,3	128,4
ALTI-NEXIS-VE5206-2 or 3 or 4 pumps...25-T4	2, 3 or 4x	22	25	400V-3-50Hz	76,6	114,9	153,8	380V-3-60Hz	75	112,5	150

HYDRAULIC PERFORMANCE - ALTI-NEXIS VE - 400 SERIES*

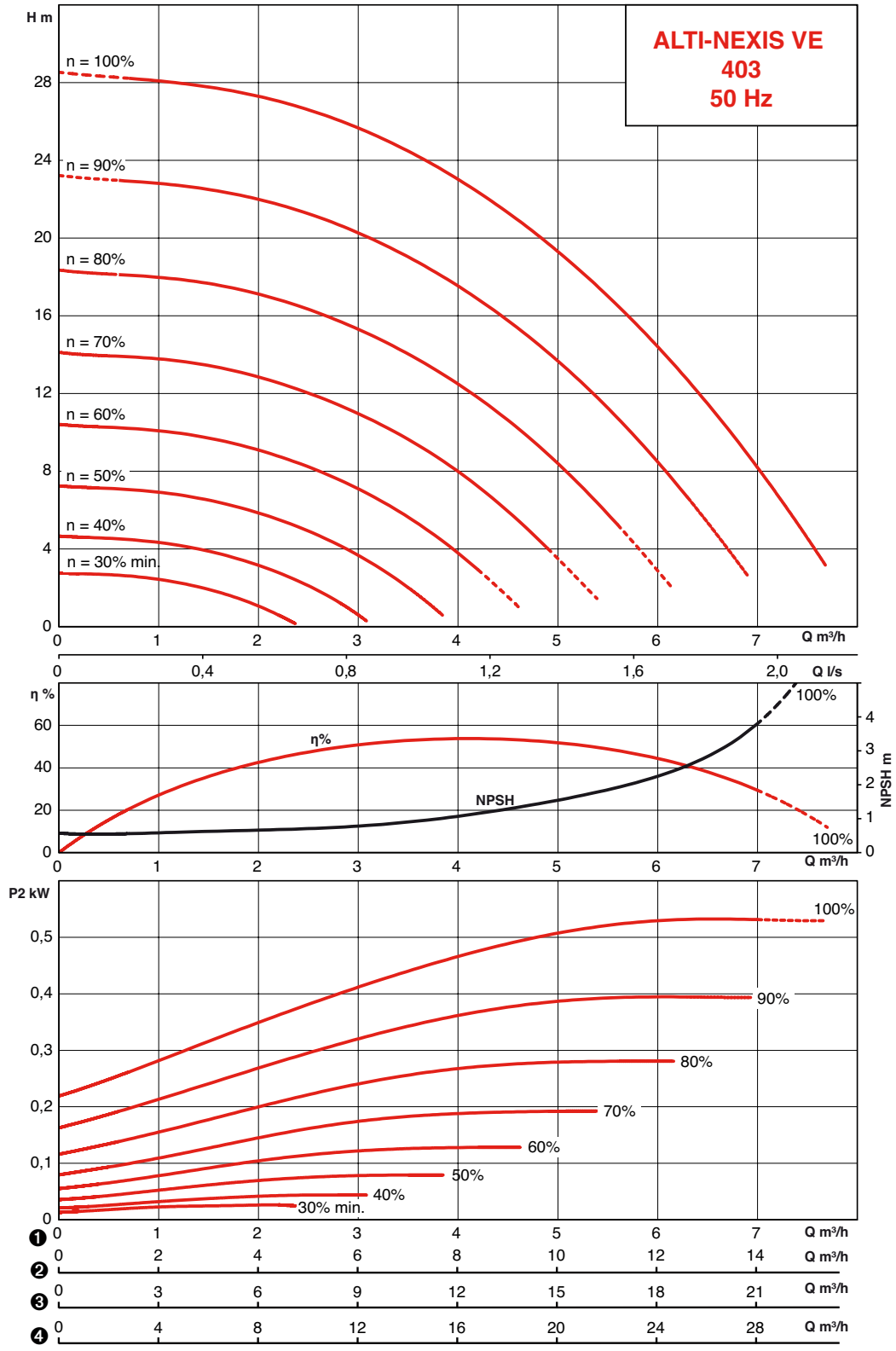

* data derived from the graphs for the pump

ALTI-NEXIS VE

HYDRAULIC PERFORMANCE - ALTI-NEXIS VE - 400 SERIES*

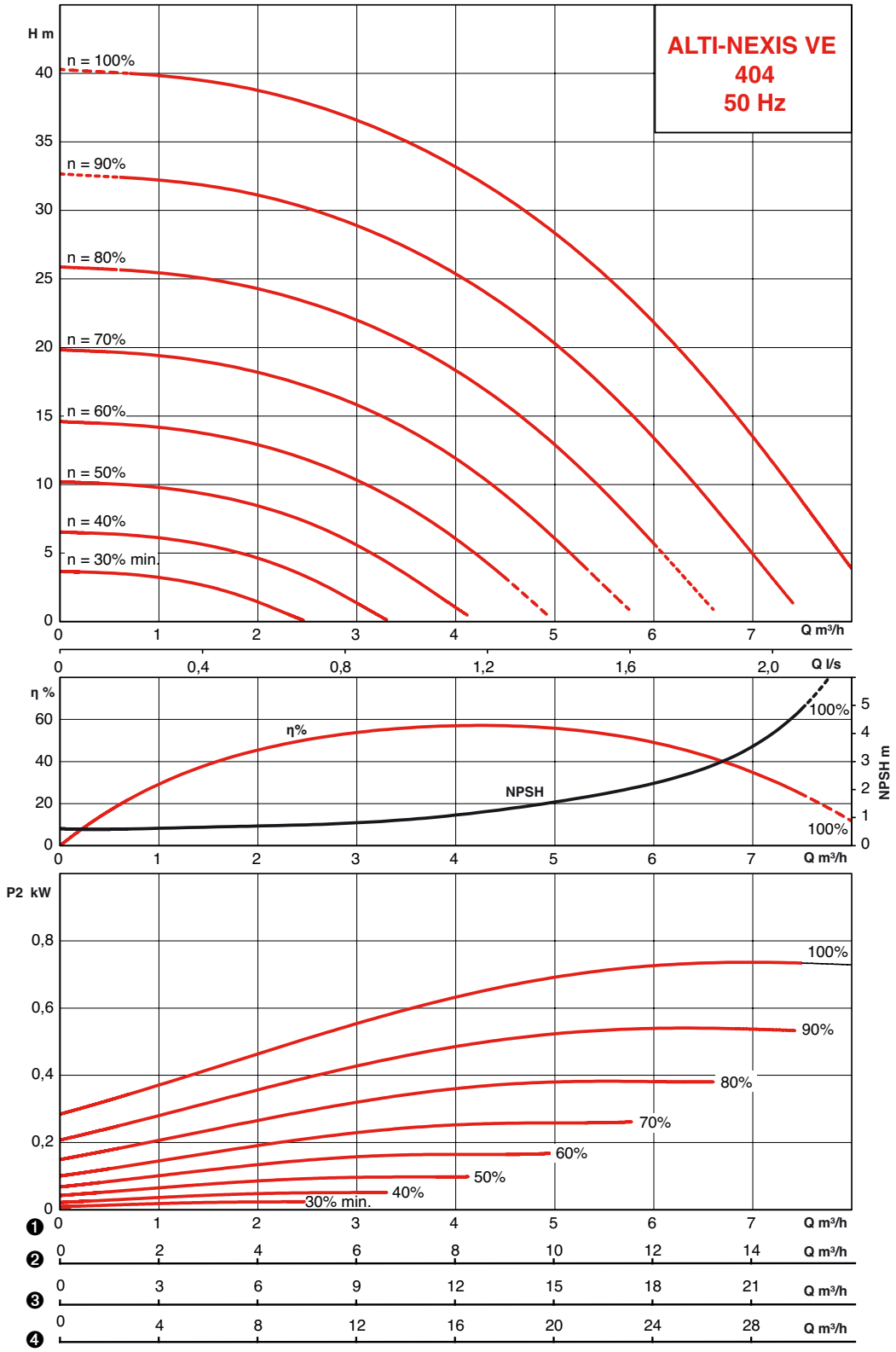

* data derived from the graphs for the pump

HYDRAULIC PERFORMANCE - ALTI-NEXIS VE - 400 SERIES*

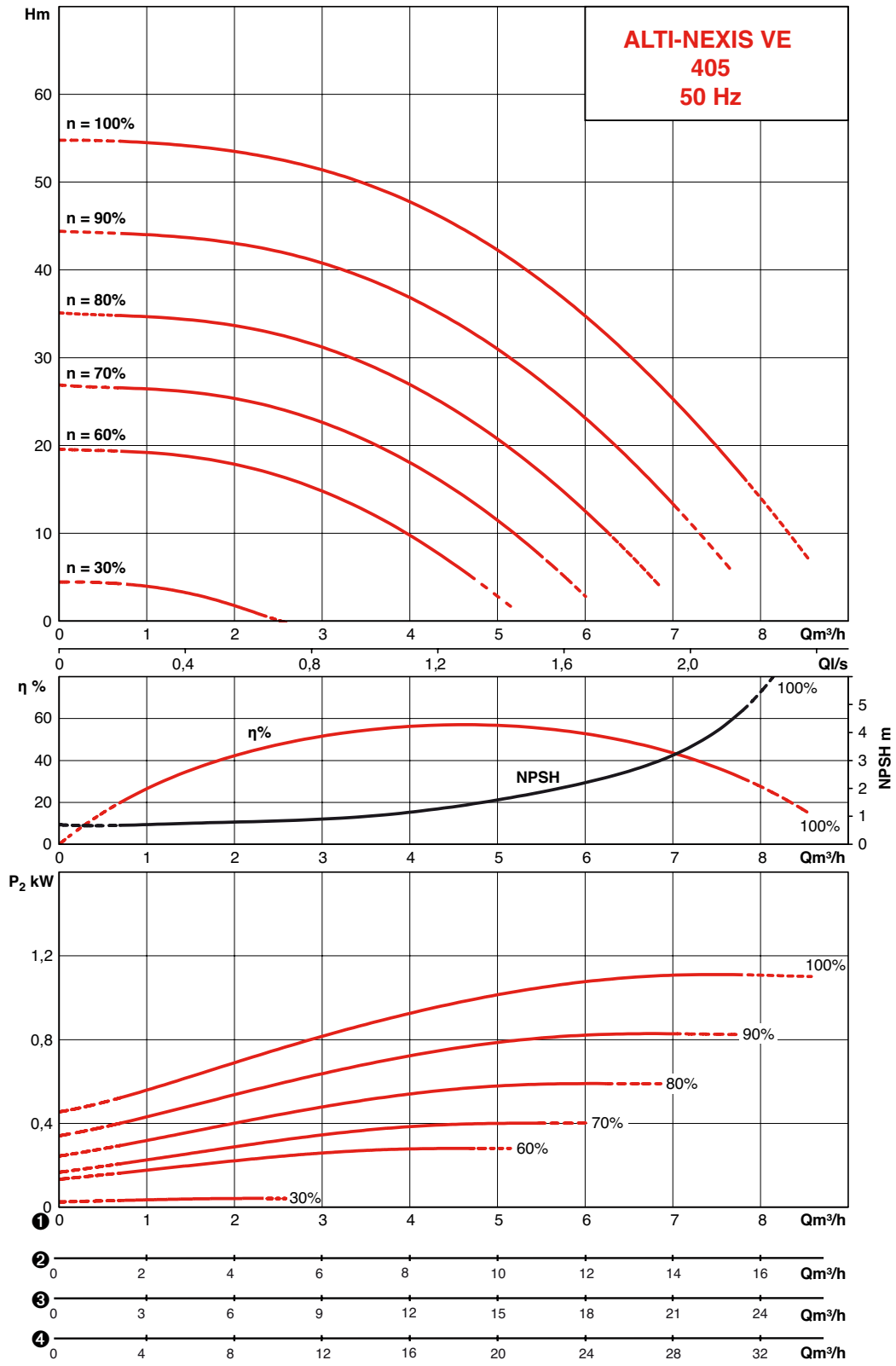

* data derived from the graphs for the pump

ALTI-NEXIS VE

HYDRAULIC PERFORMANCE - ALTI-NEXIS VE - 400 SERIES*

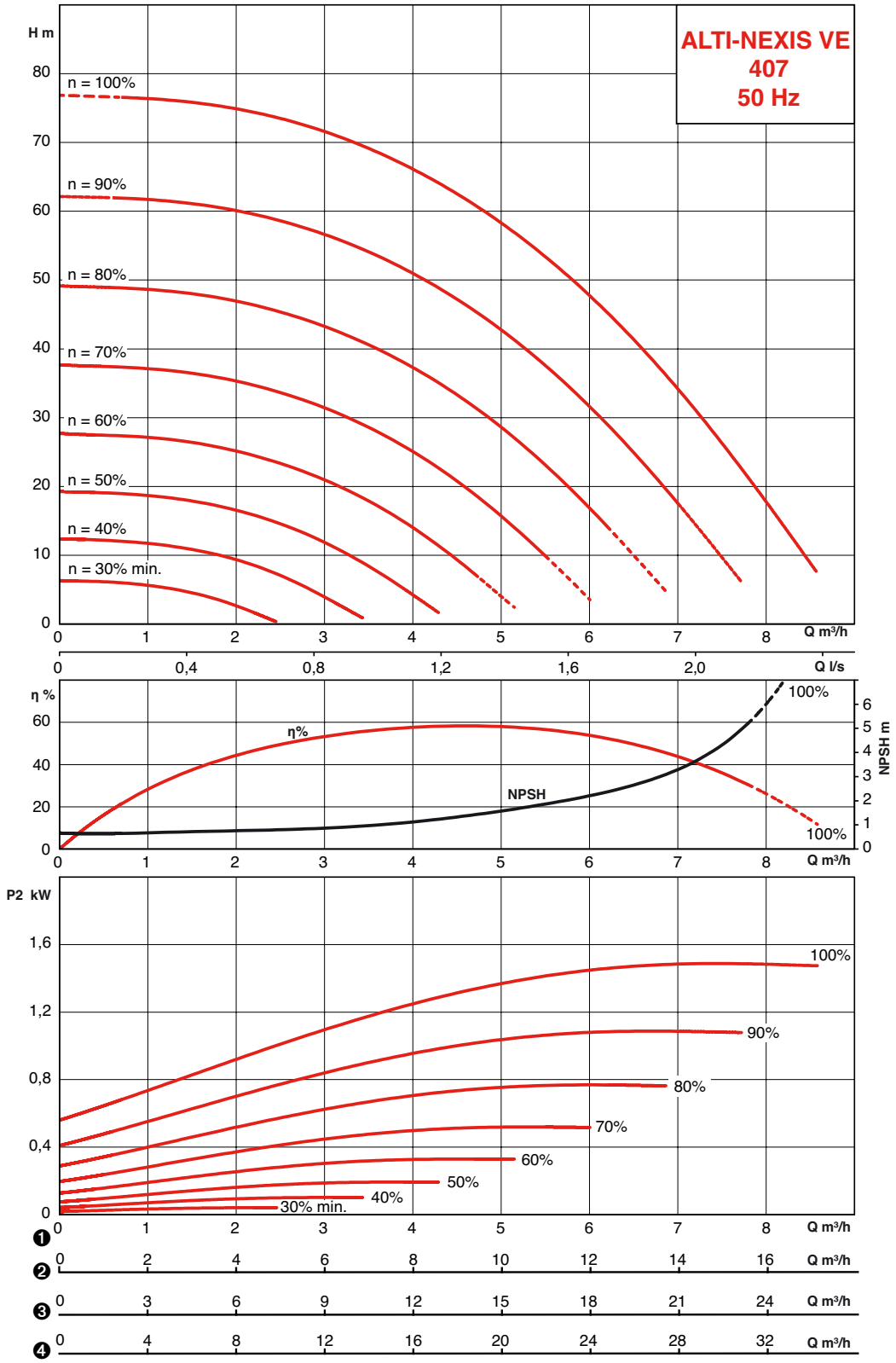

* data derived from the graphs for the pump

HYDRAULIC PERFORMANCE - ALTI-NEXIS VE - 400 SERIES*

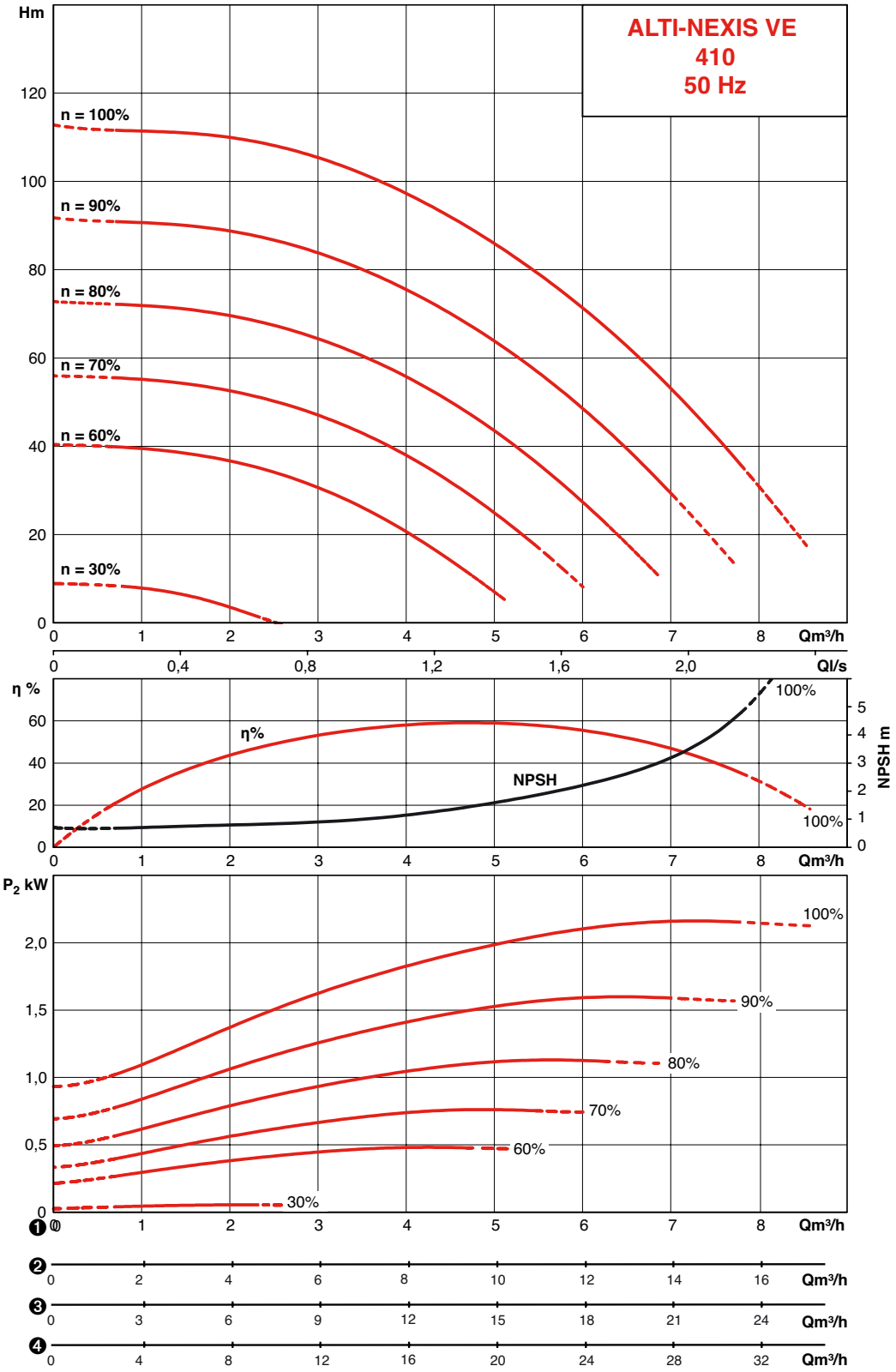

* data derived from the graphs for the pump

ALTI-NEXIS VE

HYDRAULIC PERFORMANCE - ALTI-NEXIS VE - 600 SERIES*

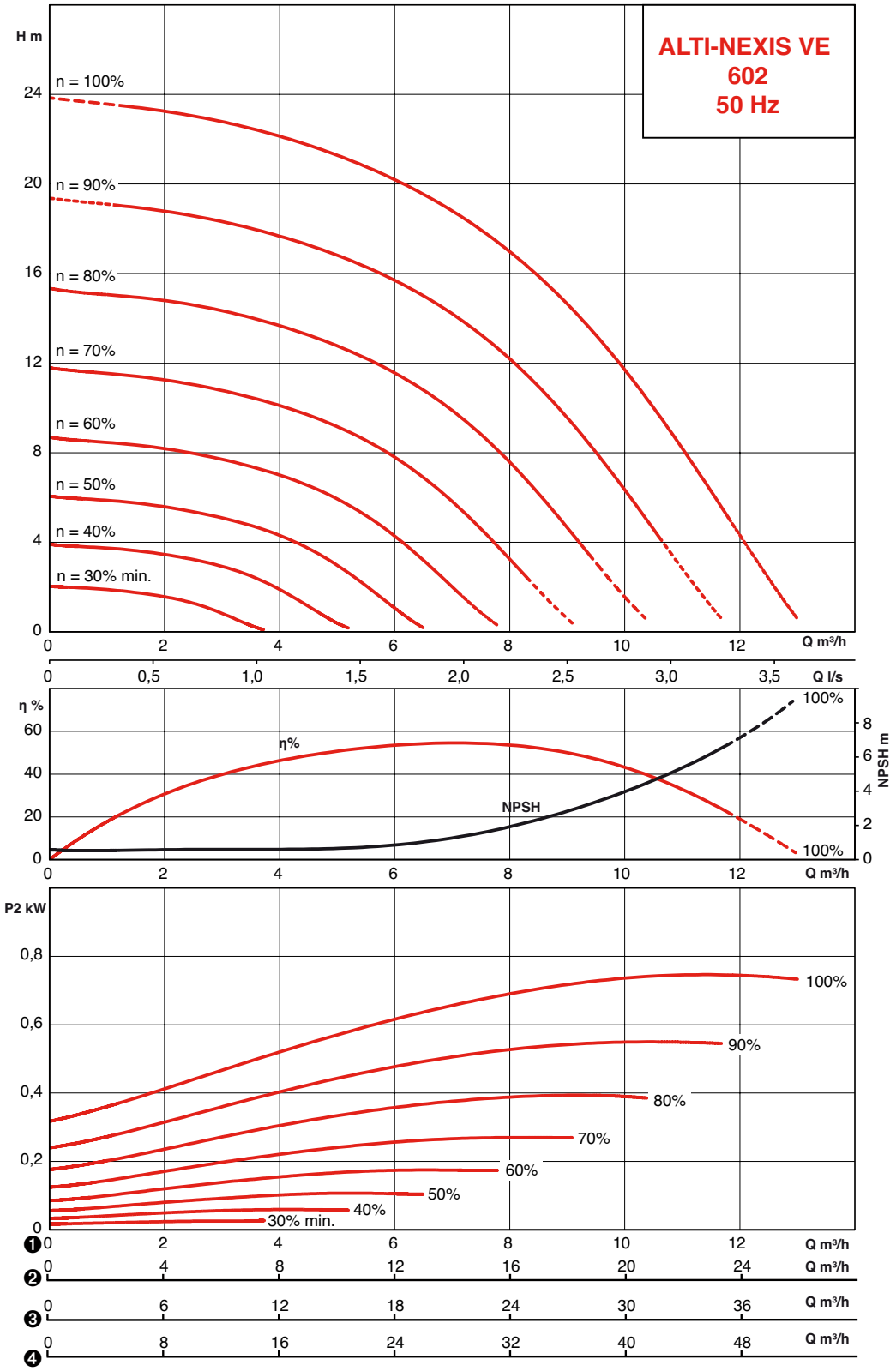

* data derived from the graphs for the pump

HYDRAULIC PERFORMANCE - ALTI-NEXIS VE - 600 SERIES*

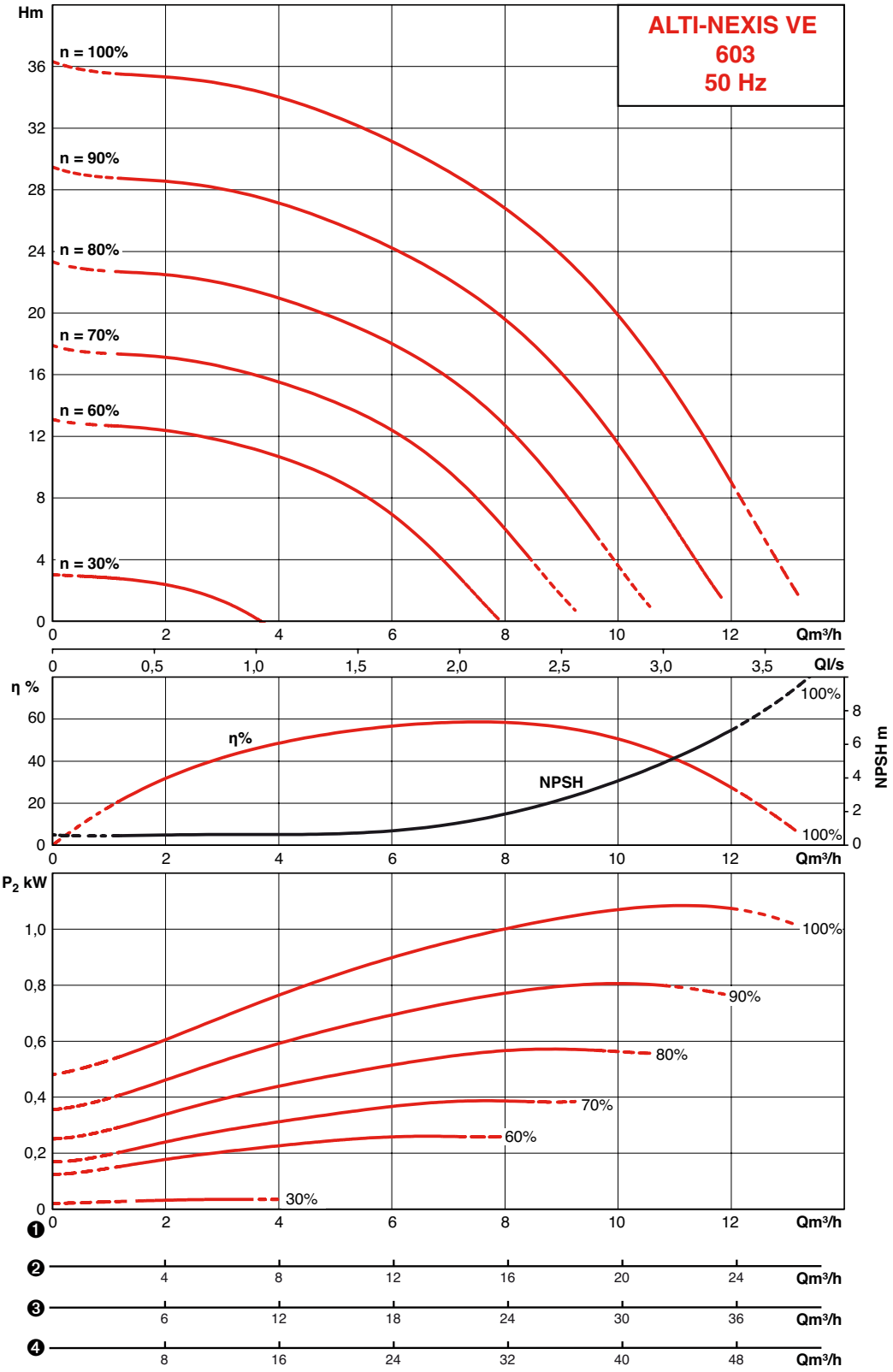

* data derived from the graphs for the pump

ALTI-NEXIS VE

HYDRAULIC PERFORMANCE - ALTI-NEXIS VE - 600 SERIES*

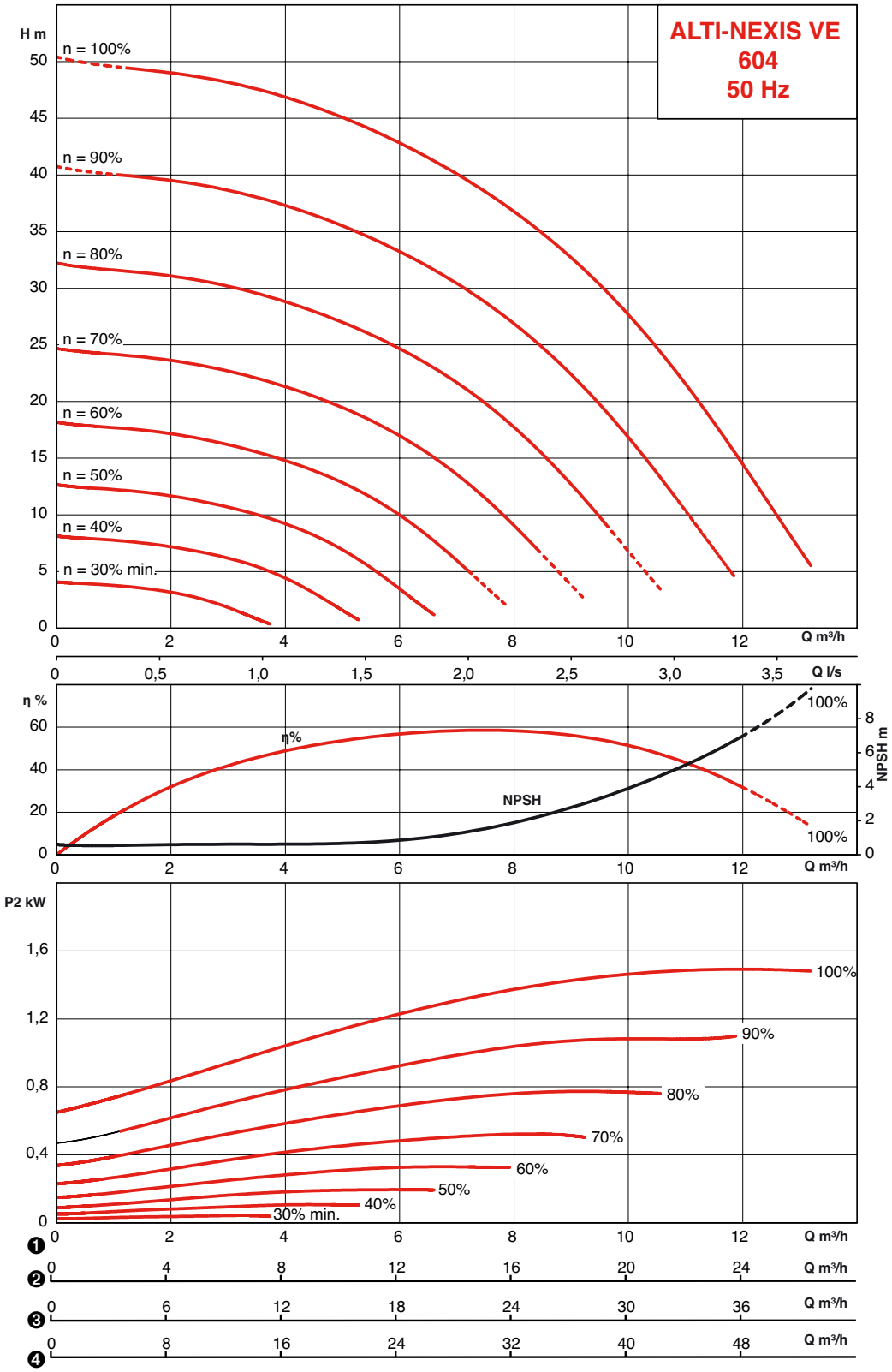

* data derived from the graphs for the pump

HYDRAULIC PERFORMANCE - ALTI-NEXIS VE - 600 SERIES*

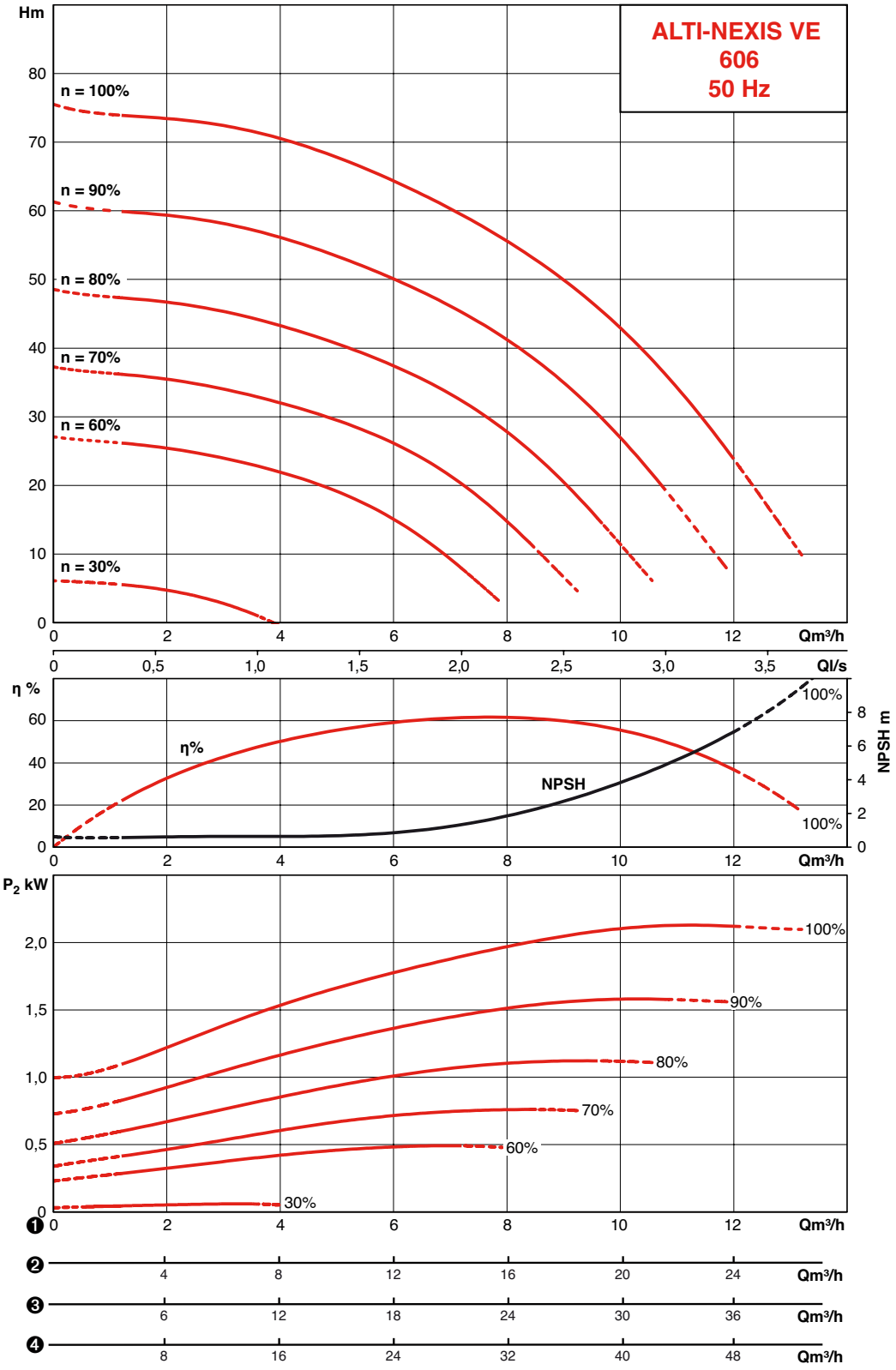

* data derived from the graphs for the pump

ALTI-NEXIS VE

HYDRAULIC PERFORMANCE - ALTI-NEXIS VE - 600 SERIES*

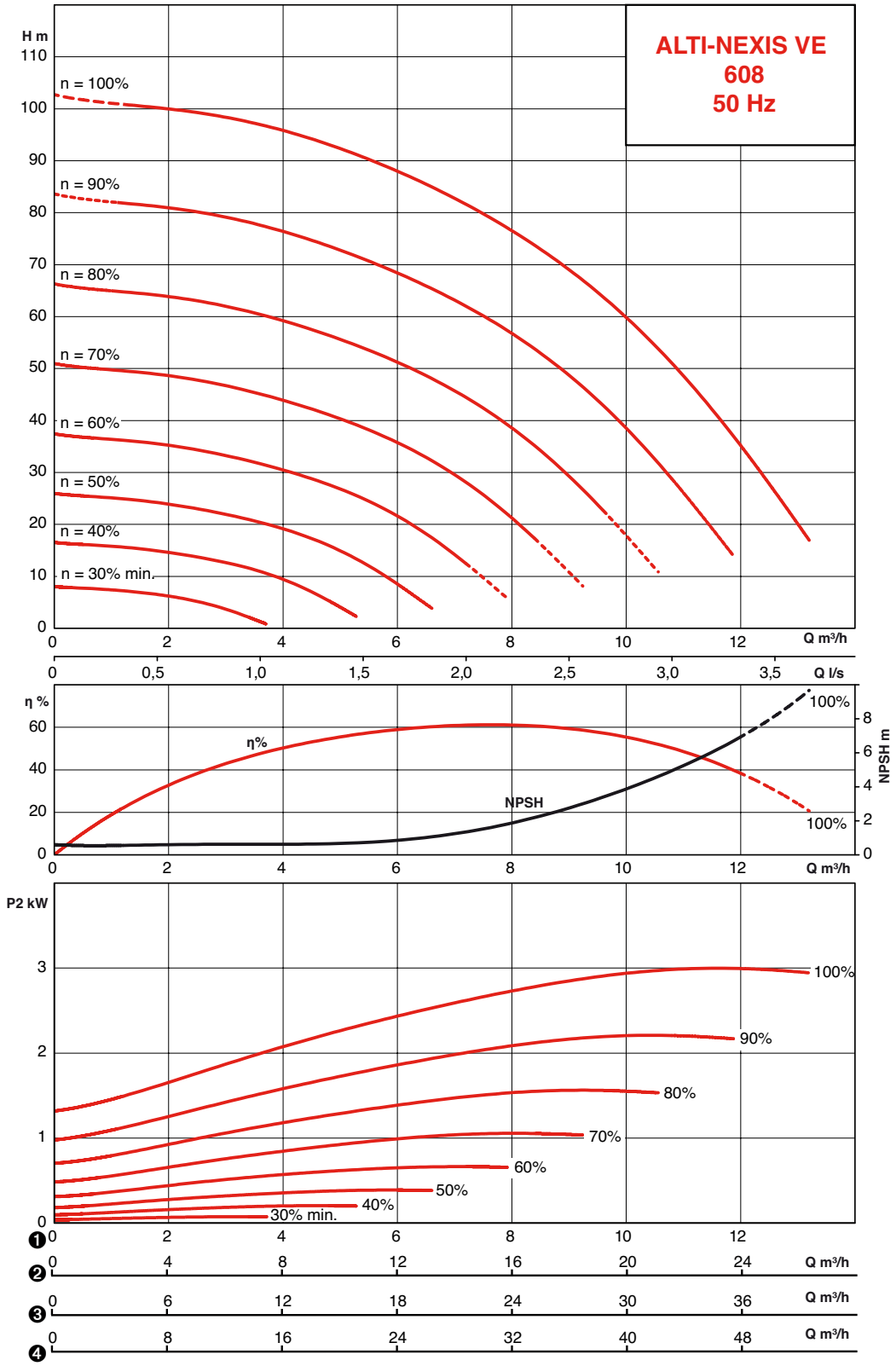

* data derived from the graphs for the pump

HYDRAULIC PERFORMANCE - ALTI-NEXIS VE - 600 SERIES*

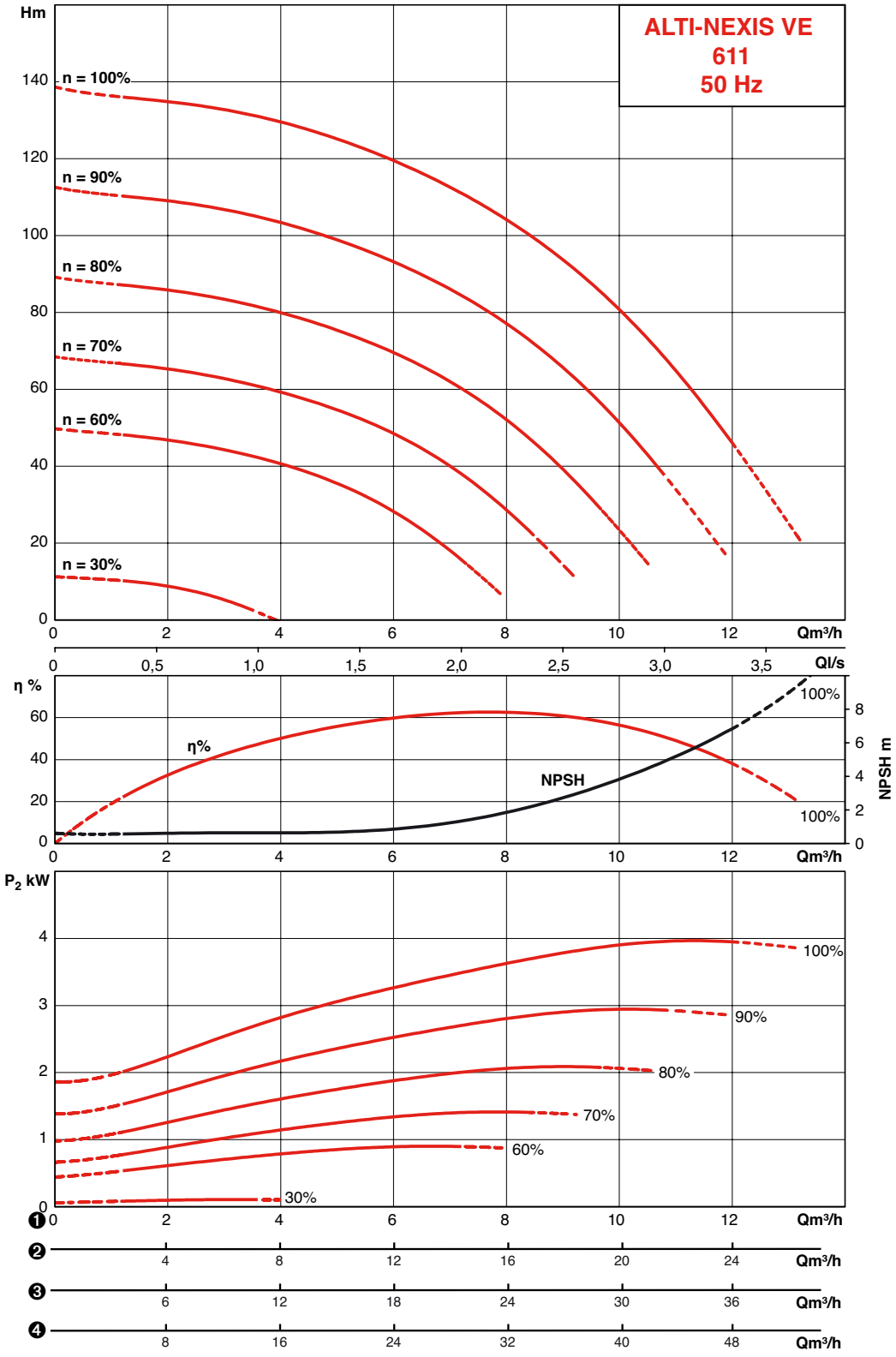

* data derived from the graphs for the pump

ALTI-NEXIS VE

HYDRAULIC PERFORMANCE - ALTI-NEXIS VE - 1000 SERIES*

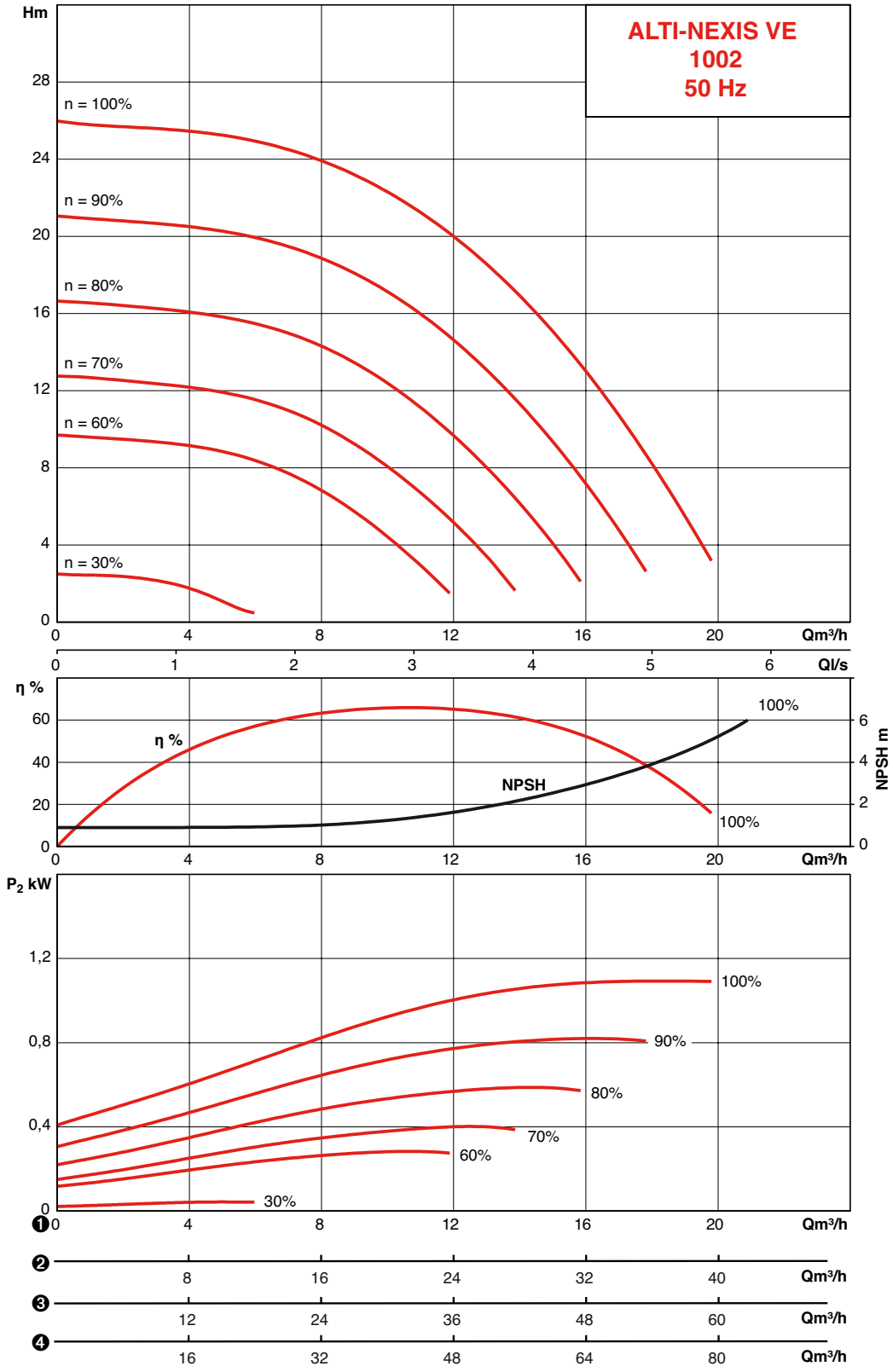

* data derived from the graphs for the pump

HYDRAULIC PERFORMANCE - ALTI-NEXIS VE - 1000 SERIES*

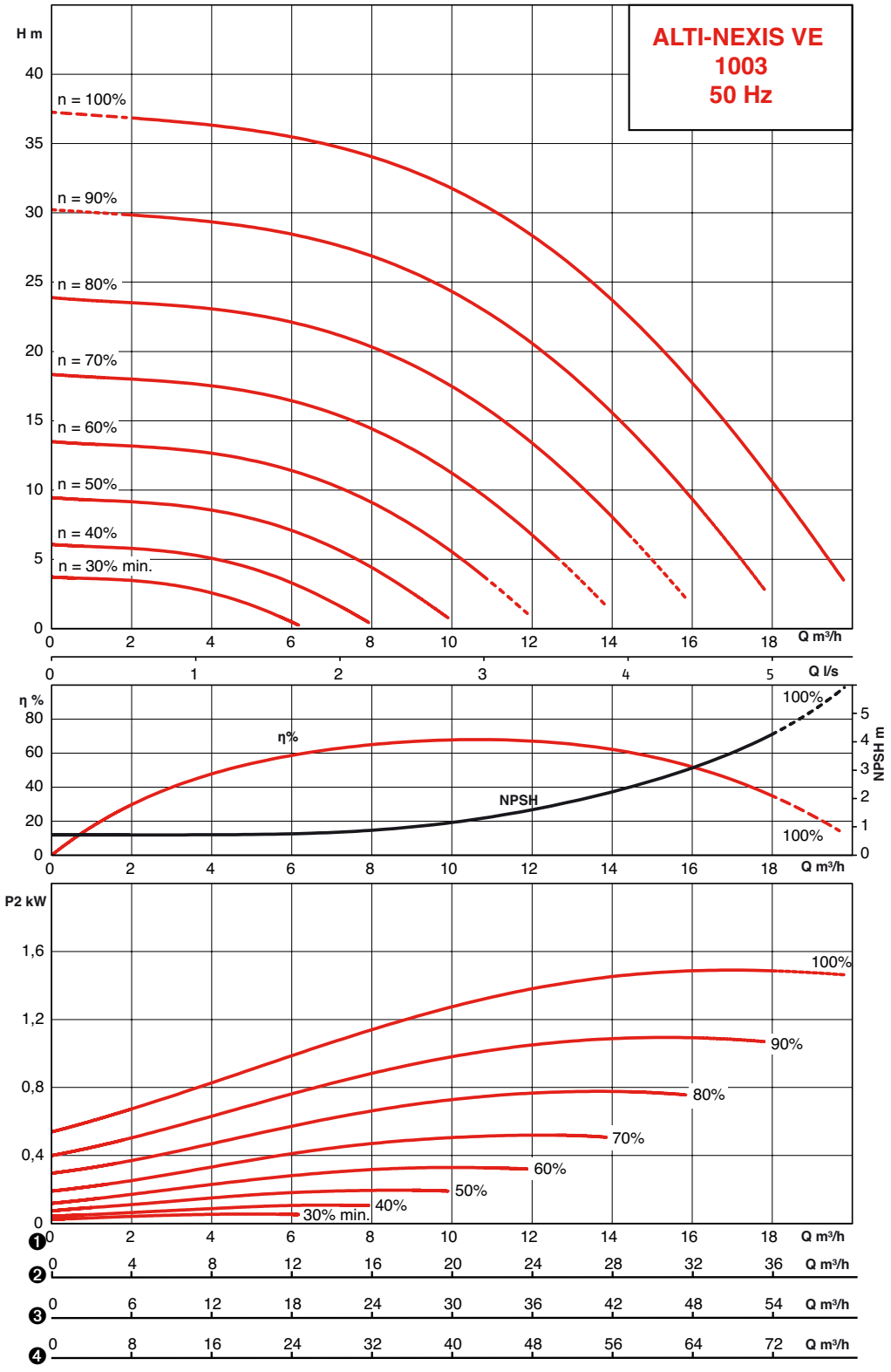

* data derived from the graphs for the pump

ALTI-NEXIS VE

HYDRAULIC PERFORMANCE - ALTI-NEXIS VE - 1000 SERIES*

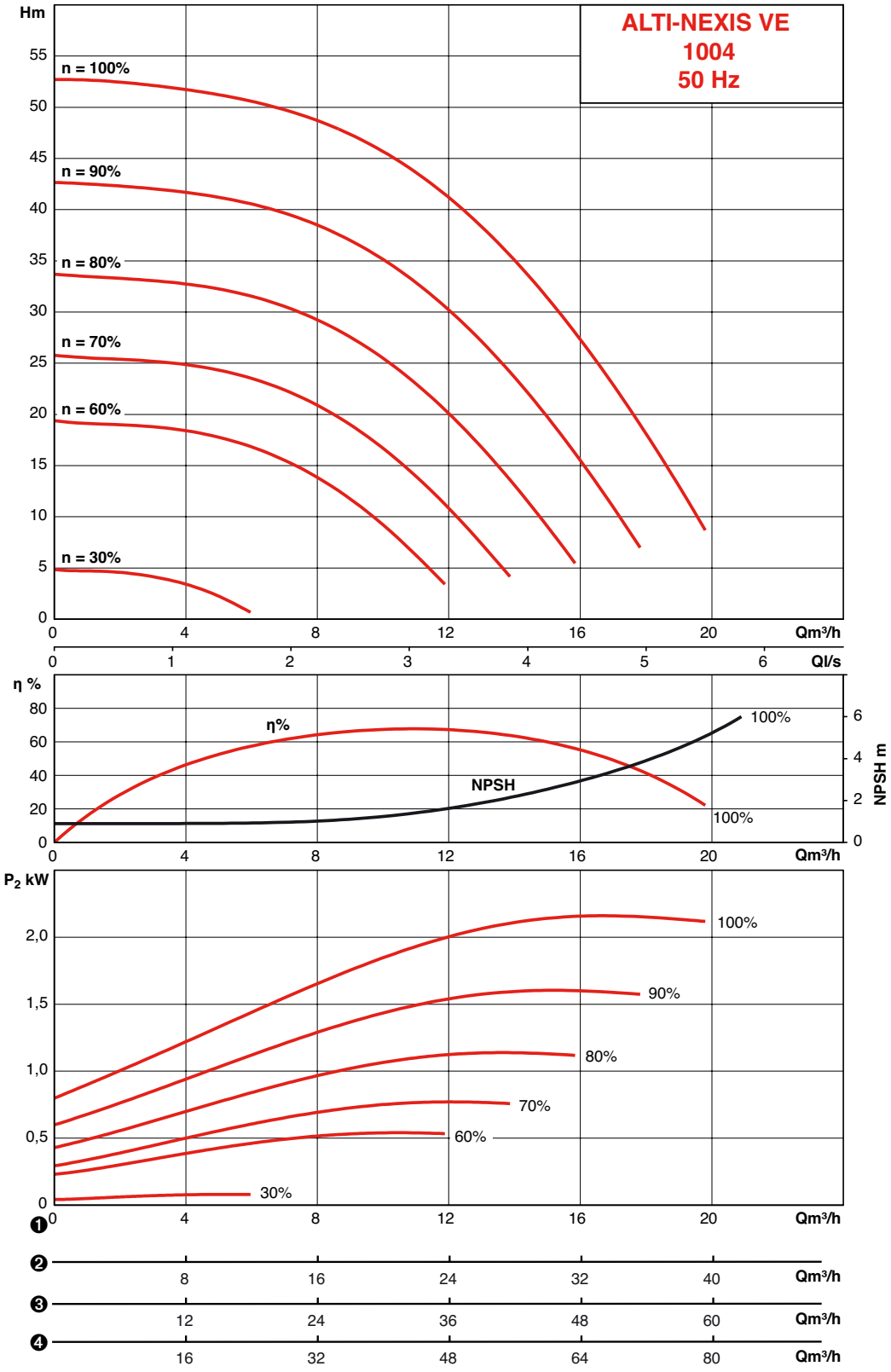

* data derived from the graphs for the pump

HYDRAULIC PERFORMANCE - ALTI-NEXIS VE - 1000 SERIES*

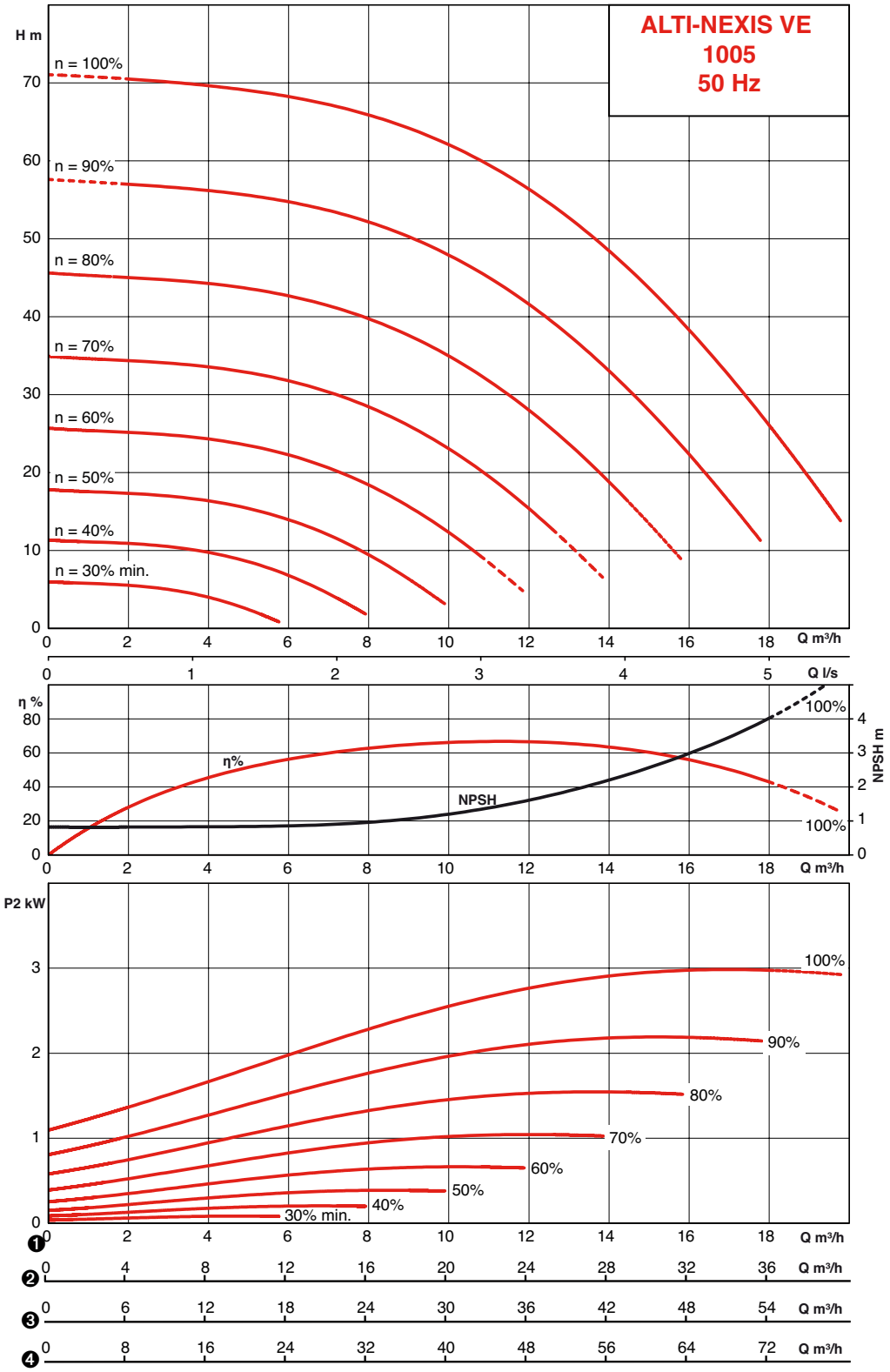

* data derived from the graphs for the pump

ALTI-NEXIS VE

HYDRAULIC PERFORMANCE - ALTI-NEXIS VE - 1000 SERIES*

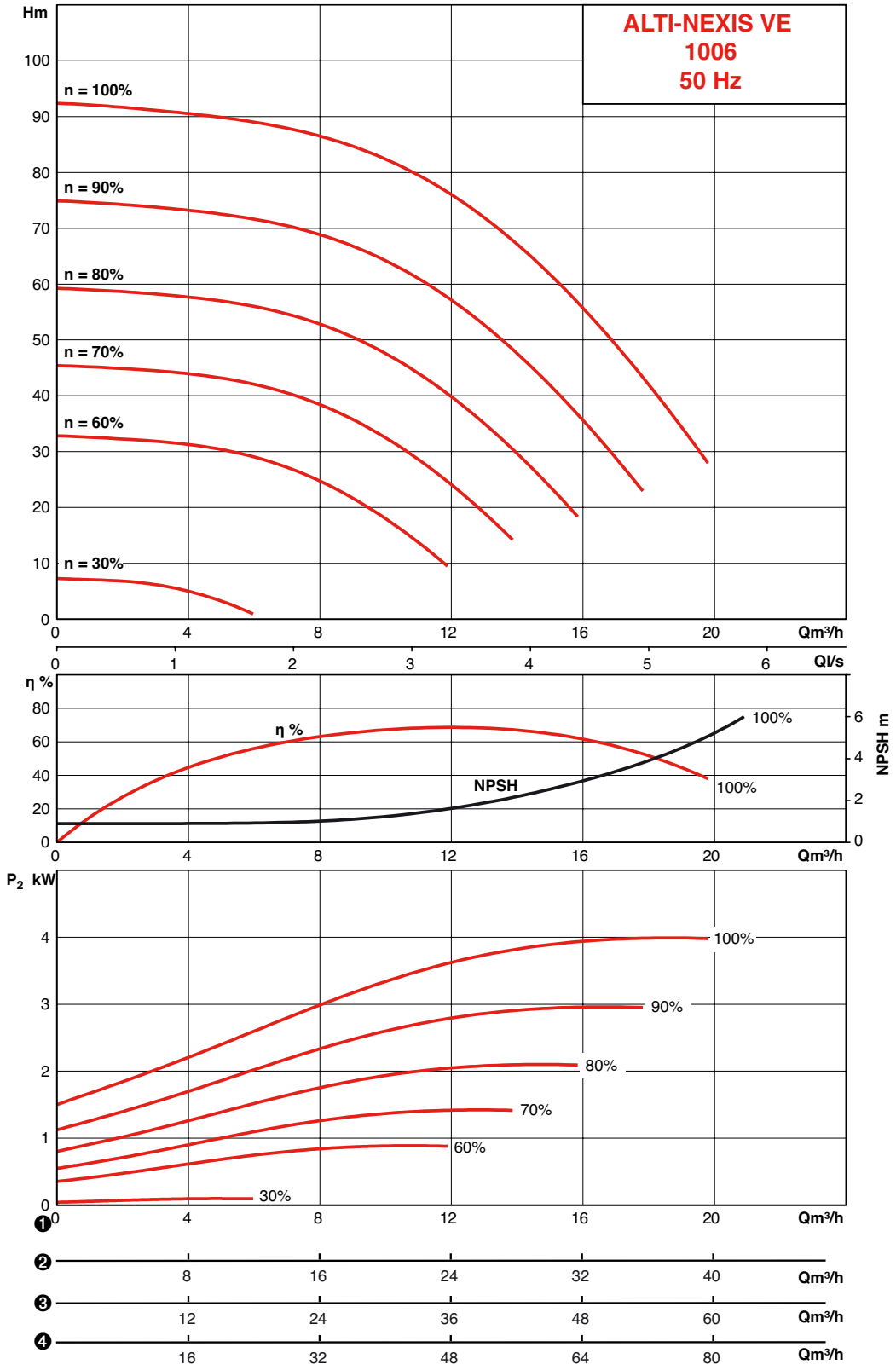

* data derived from the graphs for the pump

HYDRAULIC PERFORMANCE - ALTI-NEXIS VE - 1000 SERIES*

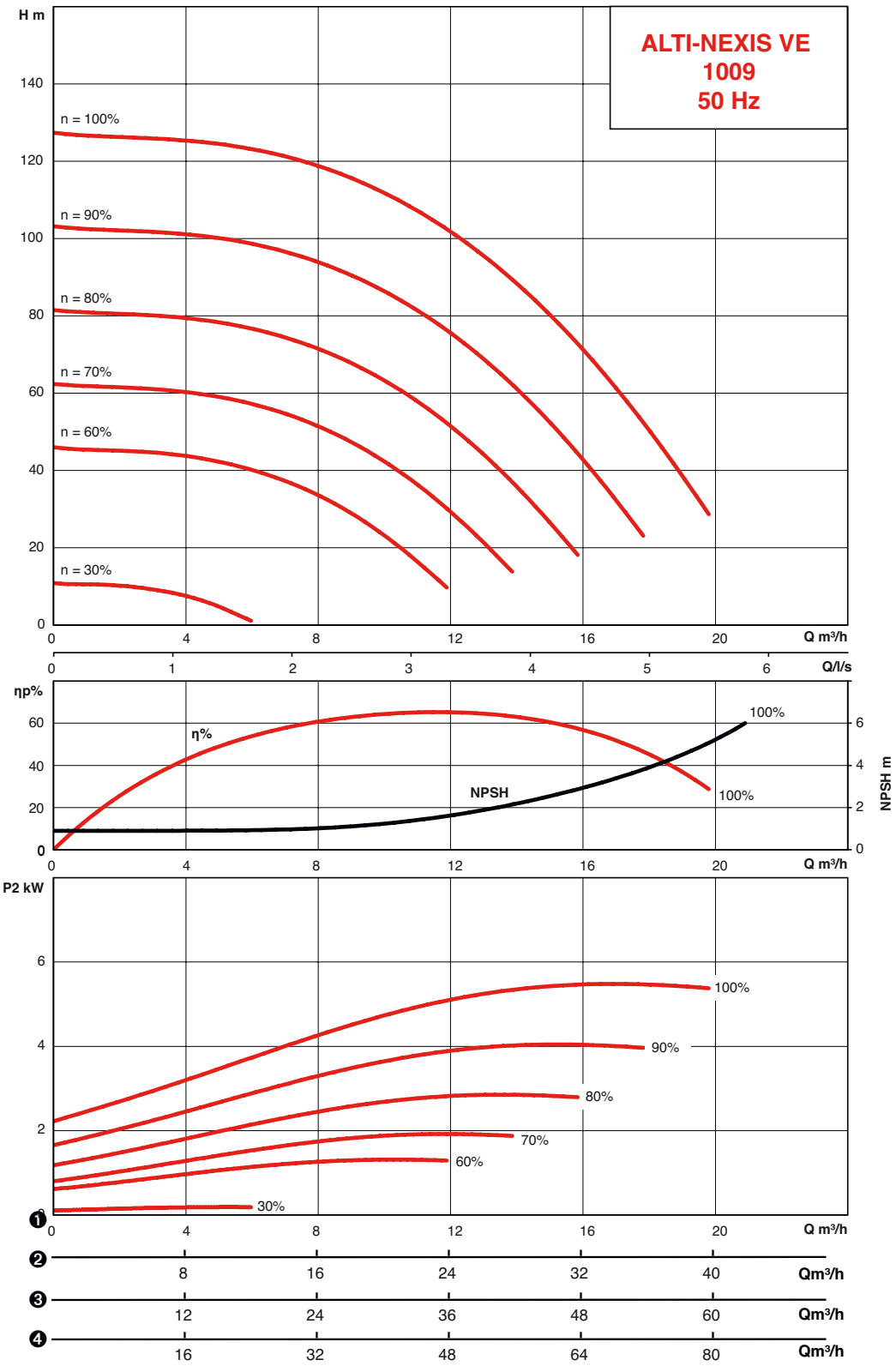

* data derived from the graphs for the pump

ALTI-NEXIS VE

HYDRAULIC PERFORMANCE - ALTI-NEXIS VE - 1600 SERIES*

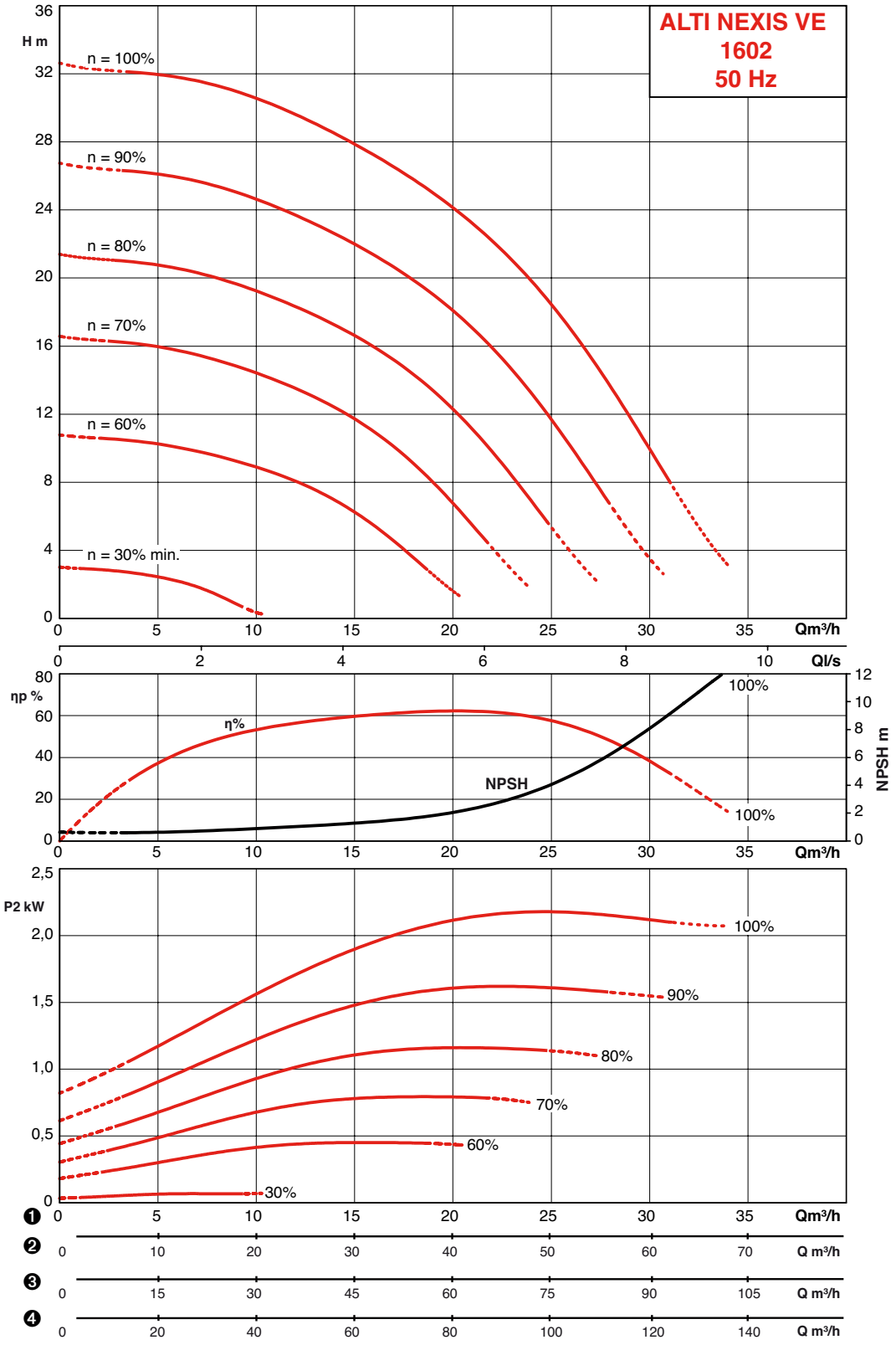

* data derived from the graphs for the pump

HYDRAULIC PERFORMANCE - ALTI-NEXIS VE - 1600 SERIES*

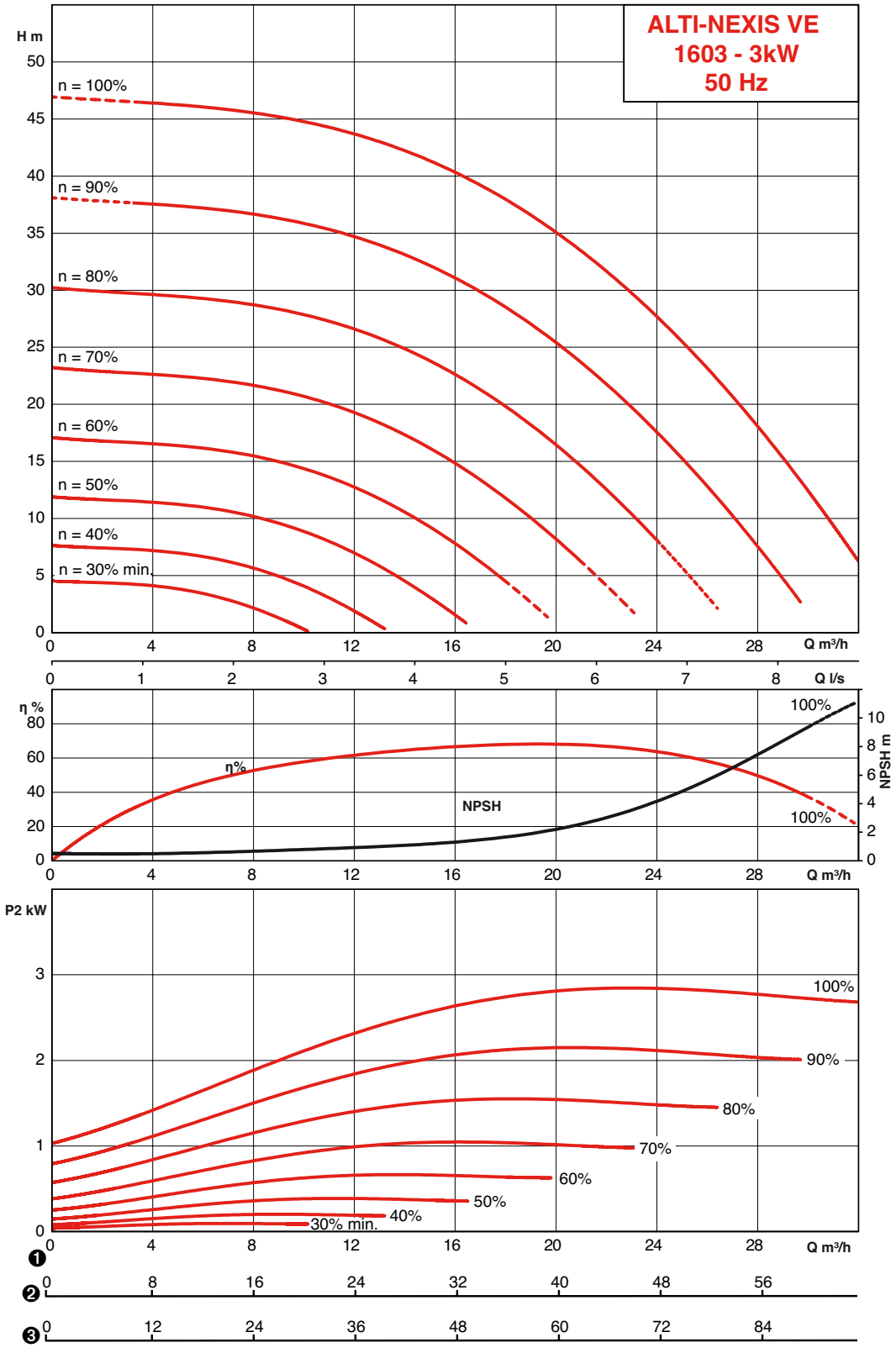

* data derived from the graphs for the pump

ALTI-NEXIS VE

HYDRAULIC PERFORMANCE - ALTI-NEXIS VE - 1600 SERIES*

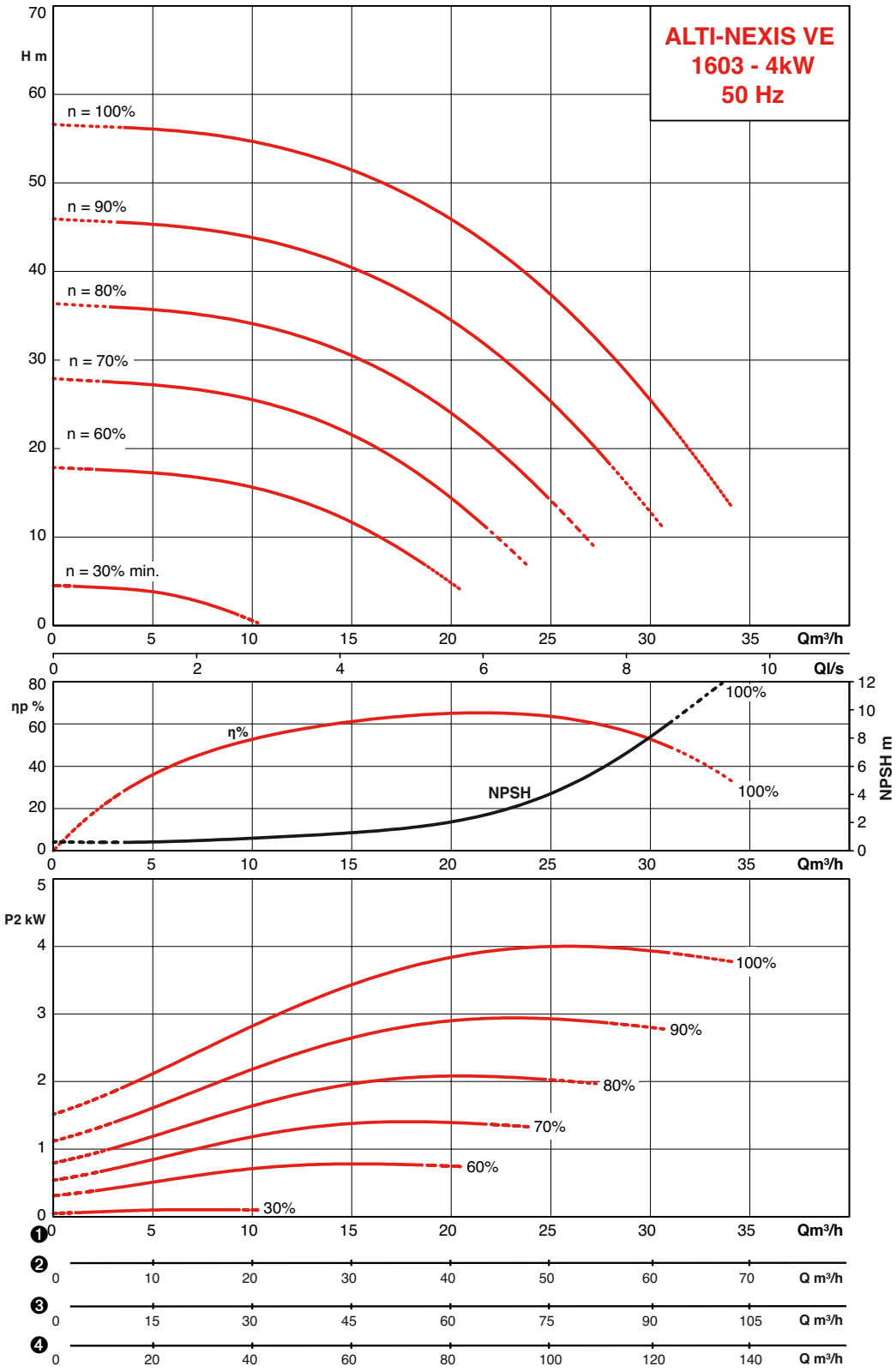

* data derived from the graphs for the pump

HYDRAULIC PERFORMANCE - ALTI-NEXIS VE - 1600 SERIES*

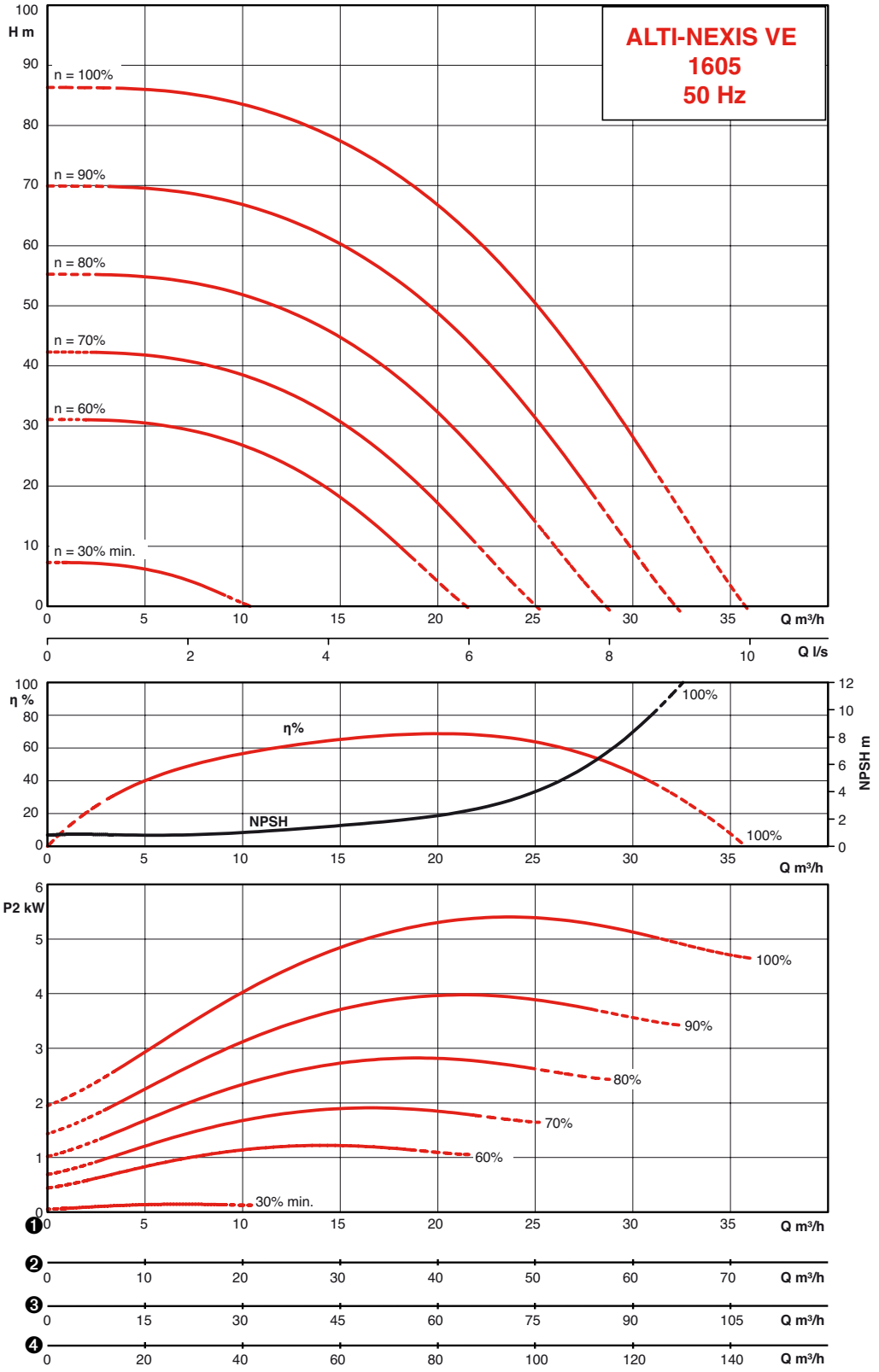

* data derived from the graphs for the pump

ALTI-NEXIS VE

HYDRAULIC PERFORMANCE - ALTI-NEXIS VE - 1600 SERIES*

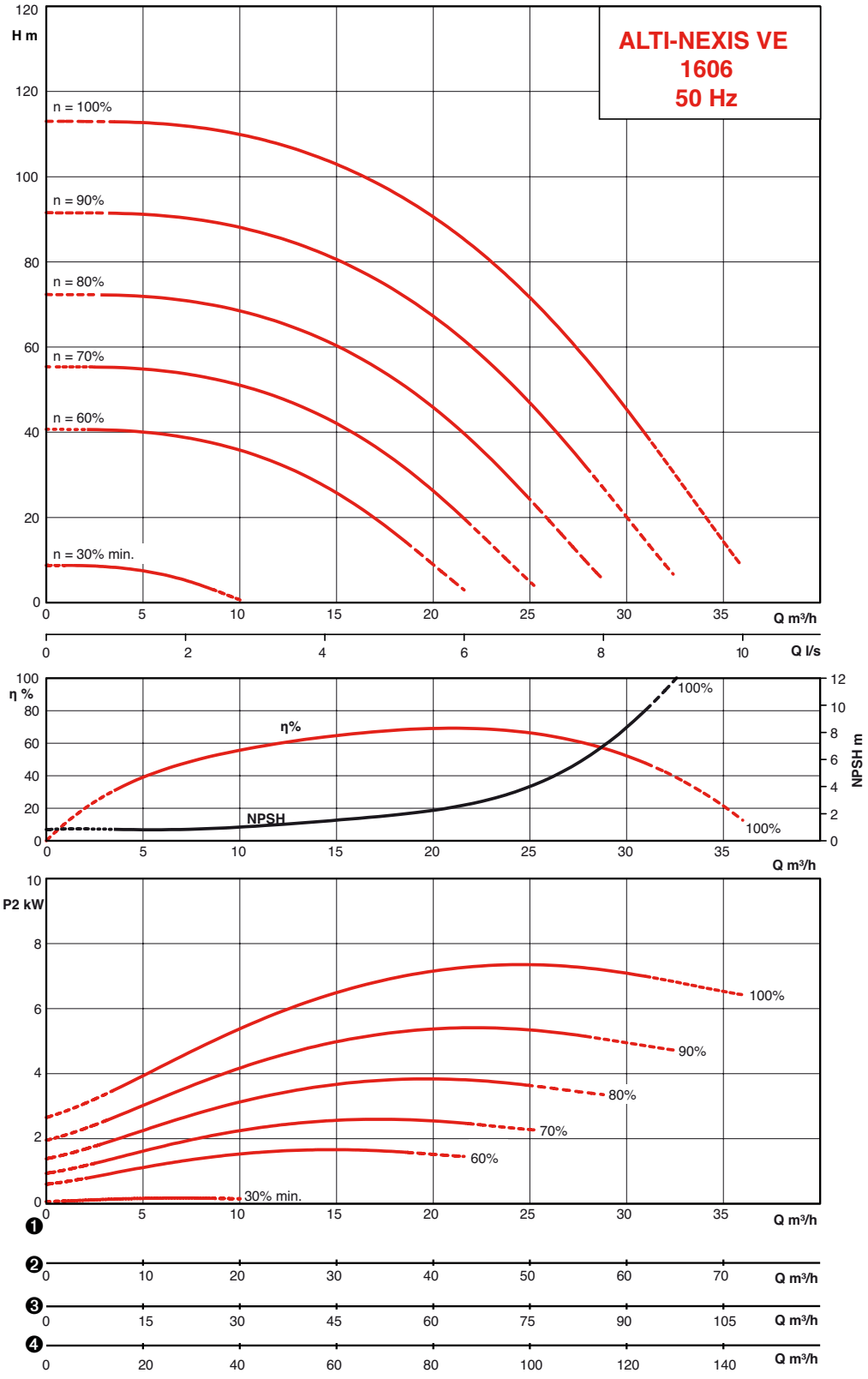

* data derived from the graphs for the pump

HYDRAULIC PERFORMANCE - ALTI-NEXIS VE - 2200 SERIES*

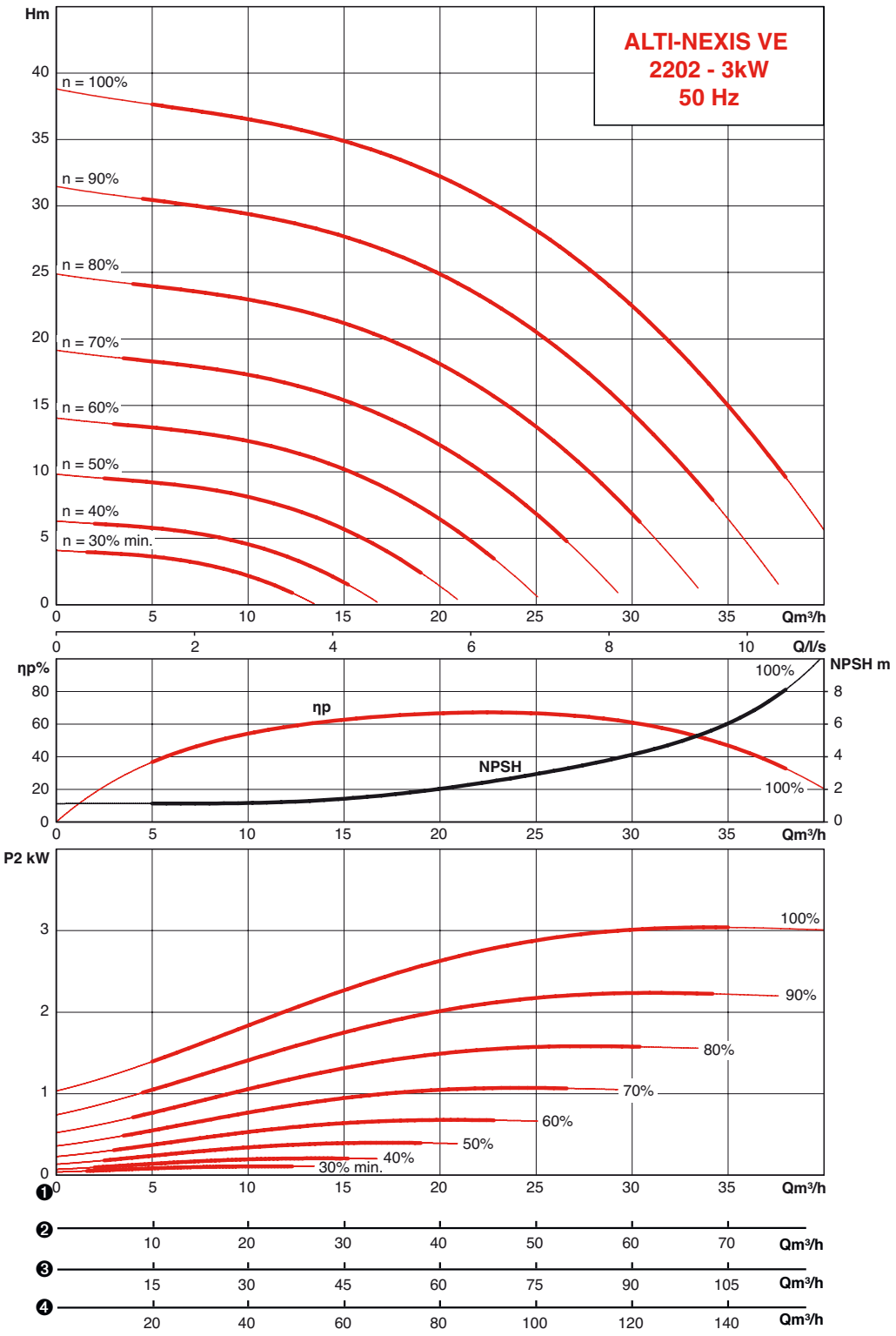

* data derived from the graphs for the pump

ALTI-NEXIS VE

HYDRAULIC PERFORMANCE - ALTI-NEXIS VE - 2200 SERIES*

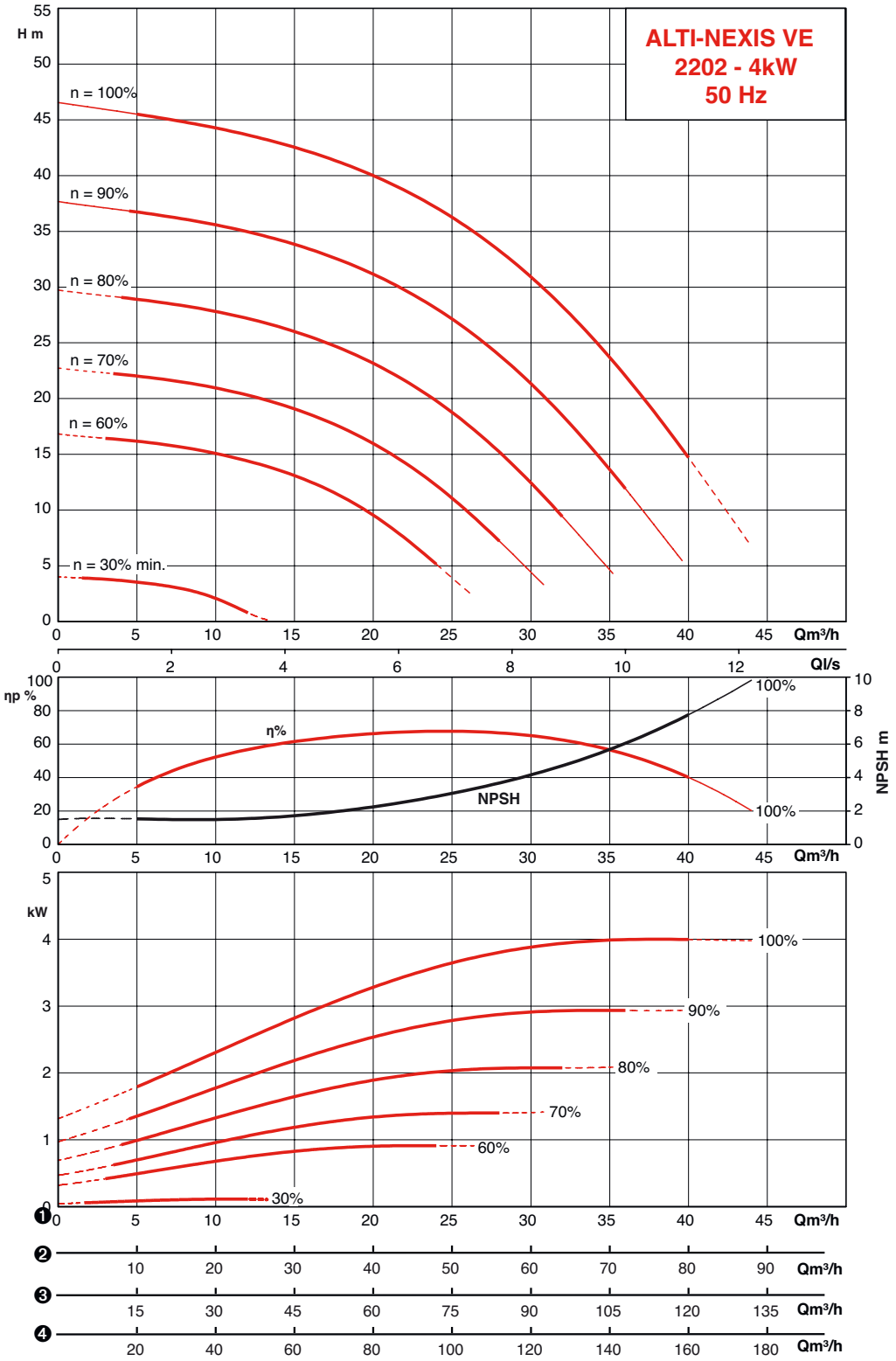

* data derived from the graphs for the pump

HYDRAULIC PERFORMANCE - ALTI-NEXIS VE - 2200 SERIES*

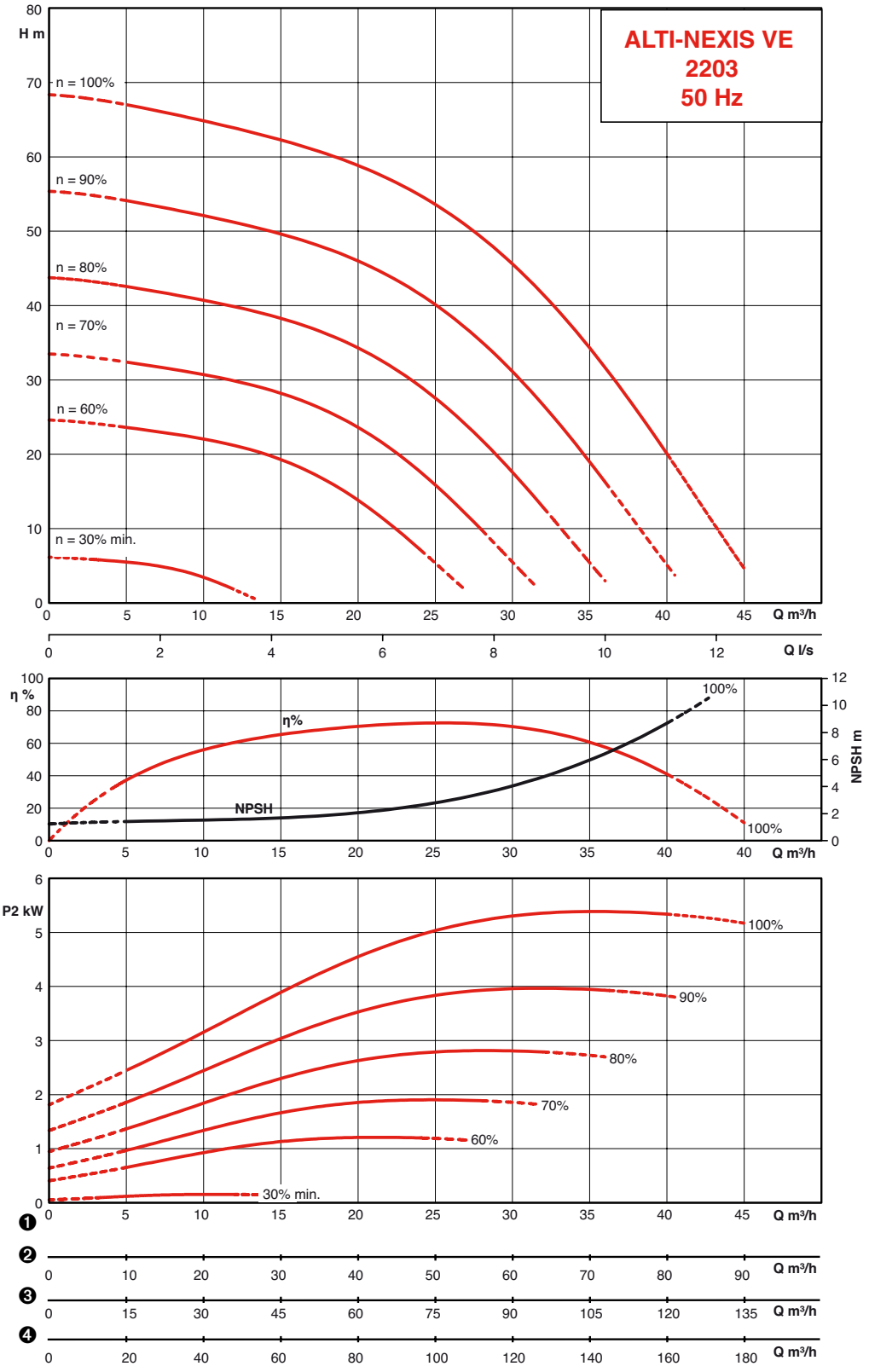

* data derived from the graphs for the pump

ALTI-NEXIS VE

HYDRAULIC PERFORMANCE - ALTI-NEXIS VE - 2200 SERIES*

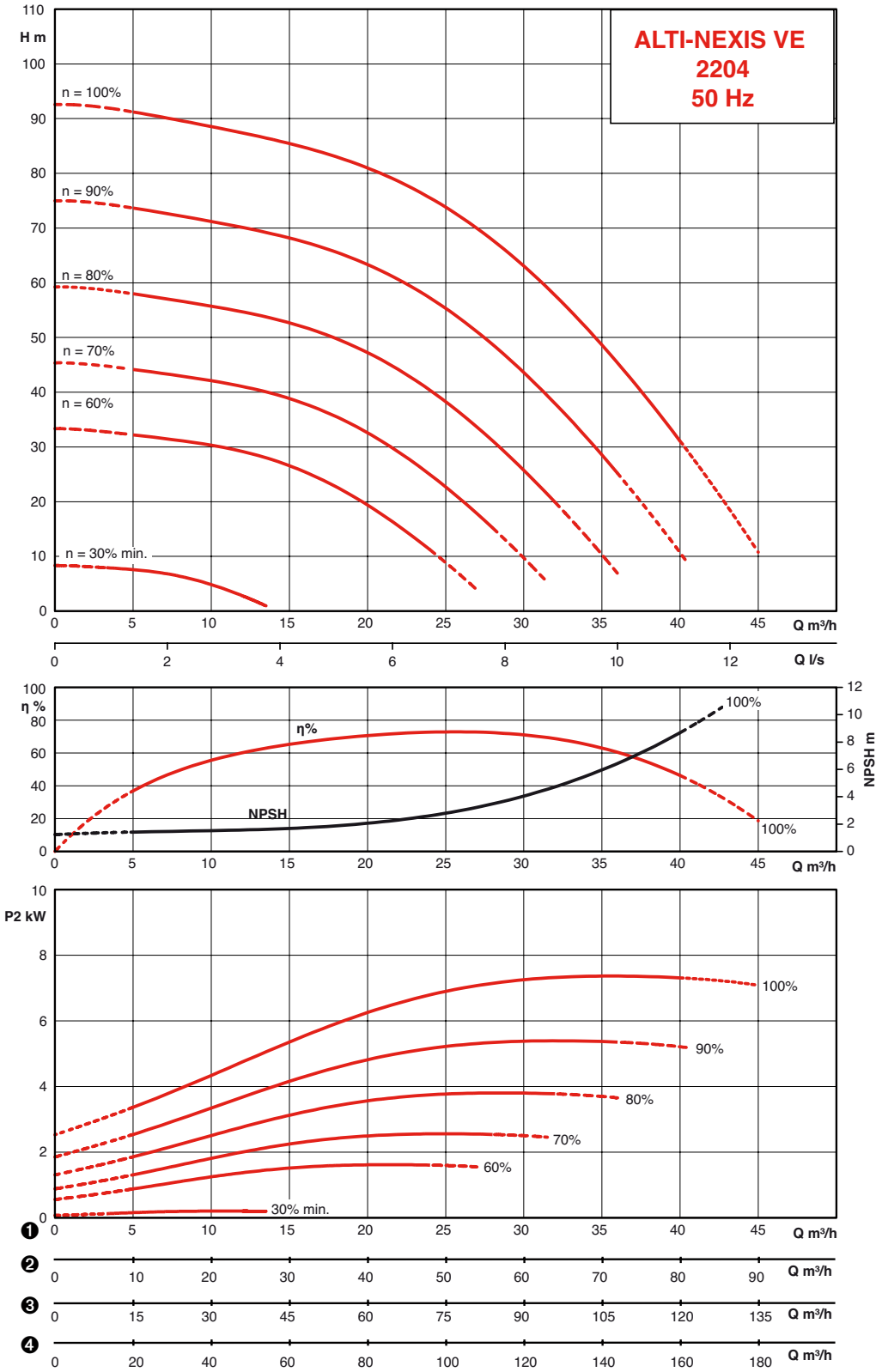

* data derived from the graphs for the pump

HYDRAULIC PERFORMANCE - ALTI-NEXIS VE - 2200 SERIES*

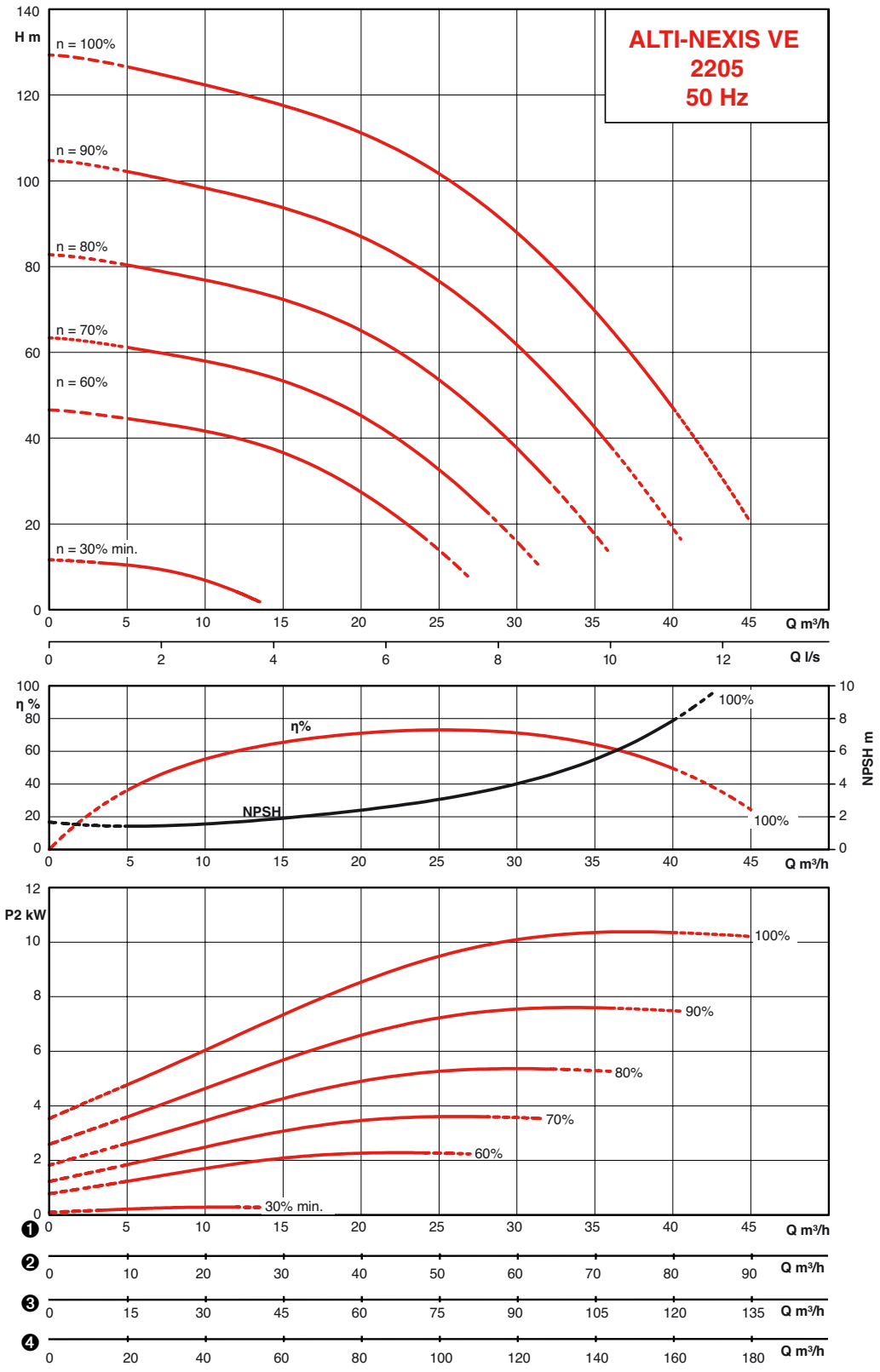

* data derived from the graphs for the pump

ALTI-NEXIS VE

HYDRAULIC PERFORMANCE - ALTI-NEXIS VE - 2200 SERIES*

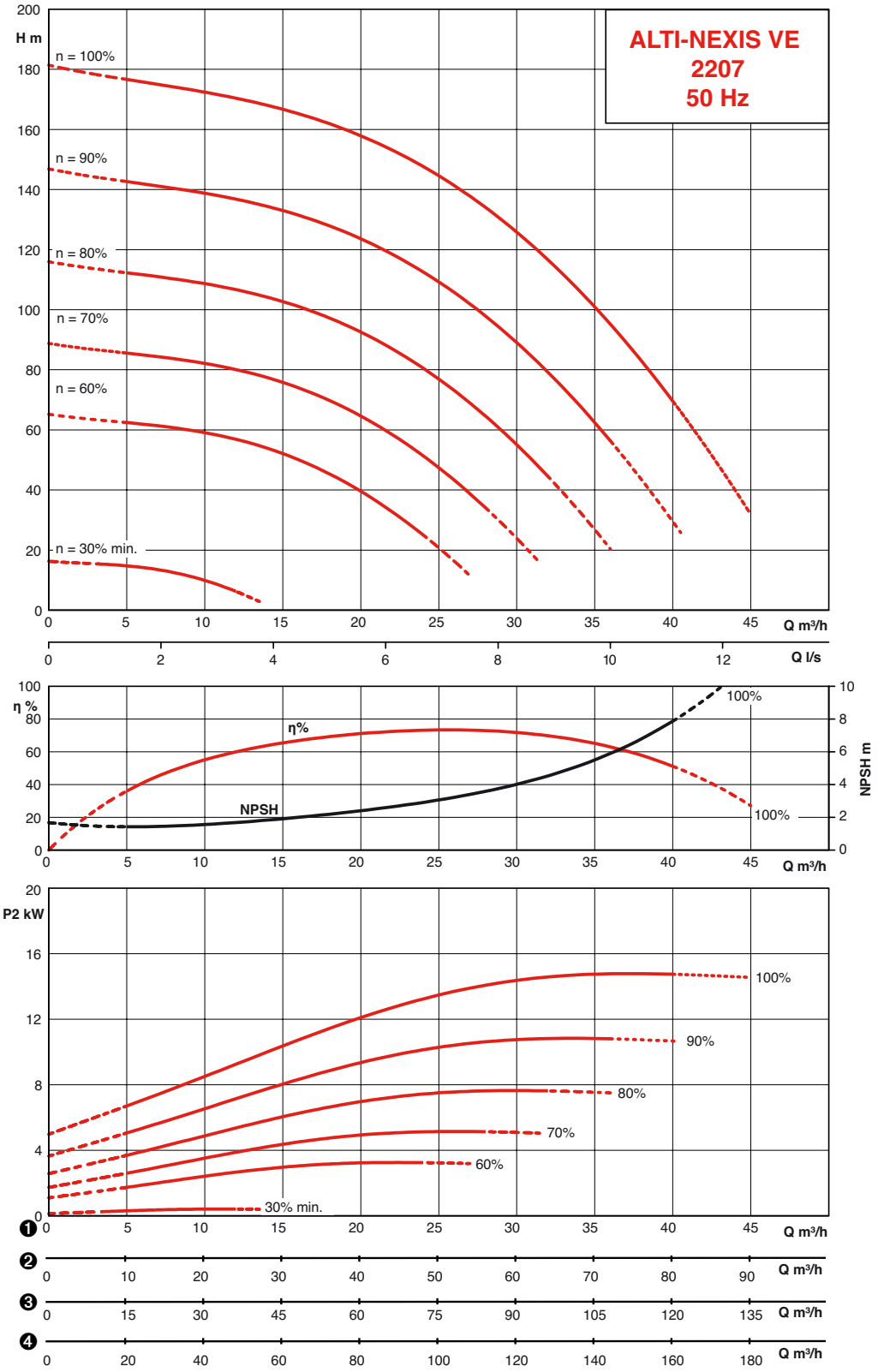

* data derived from the graphs for the pump

HYDRAULIC PERFORMANCE - ALTI-NEXIS VE - 2200 SERIES*

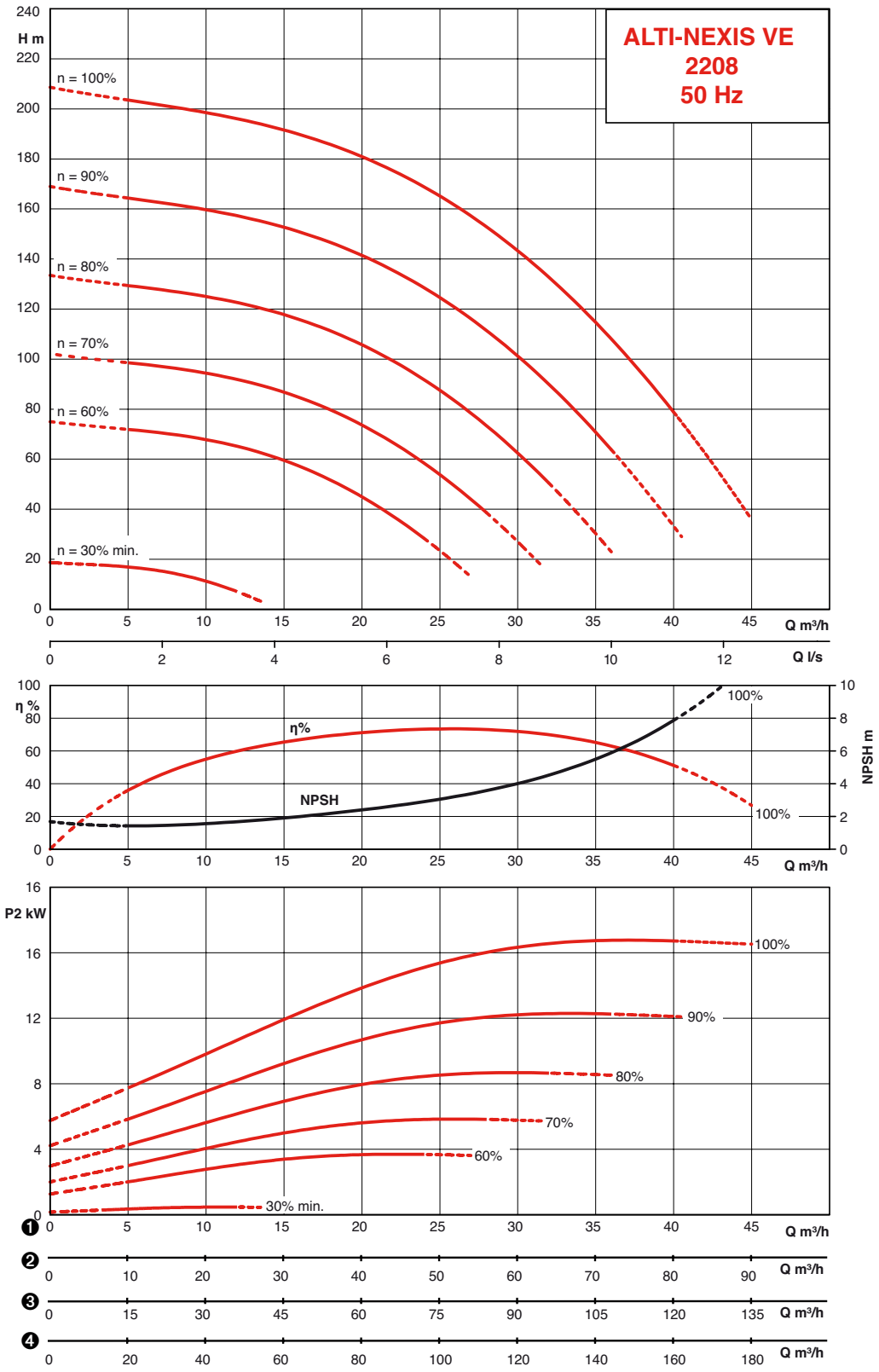

* data derived from the graphs for the pump

ALTI-NEXIS VE

HYDRAULIC PERFORMANCE - ALTI-NEXIS VE - 2200 SERIES*

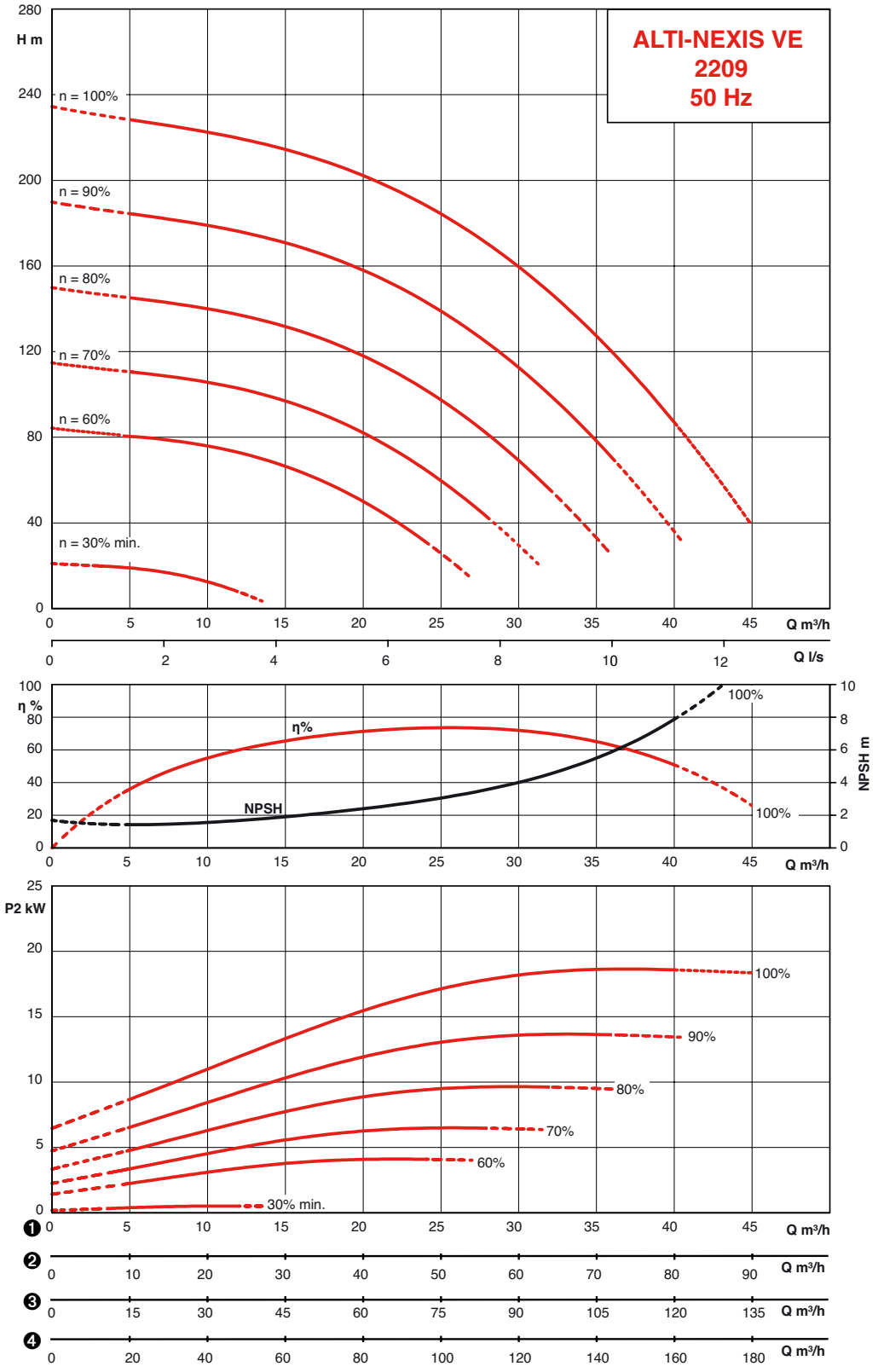

* data derived from the graphs for the pump

HYDRAULIC PERFORMANCE - ALTI-NEXIS VE - 3600 SERIES*

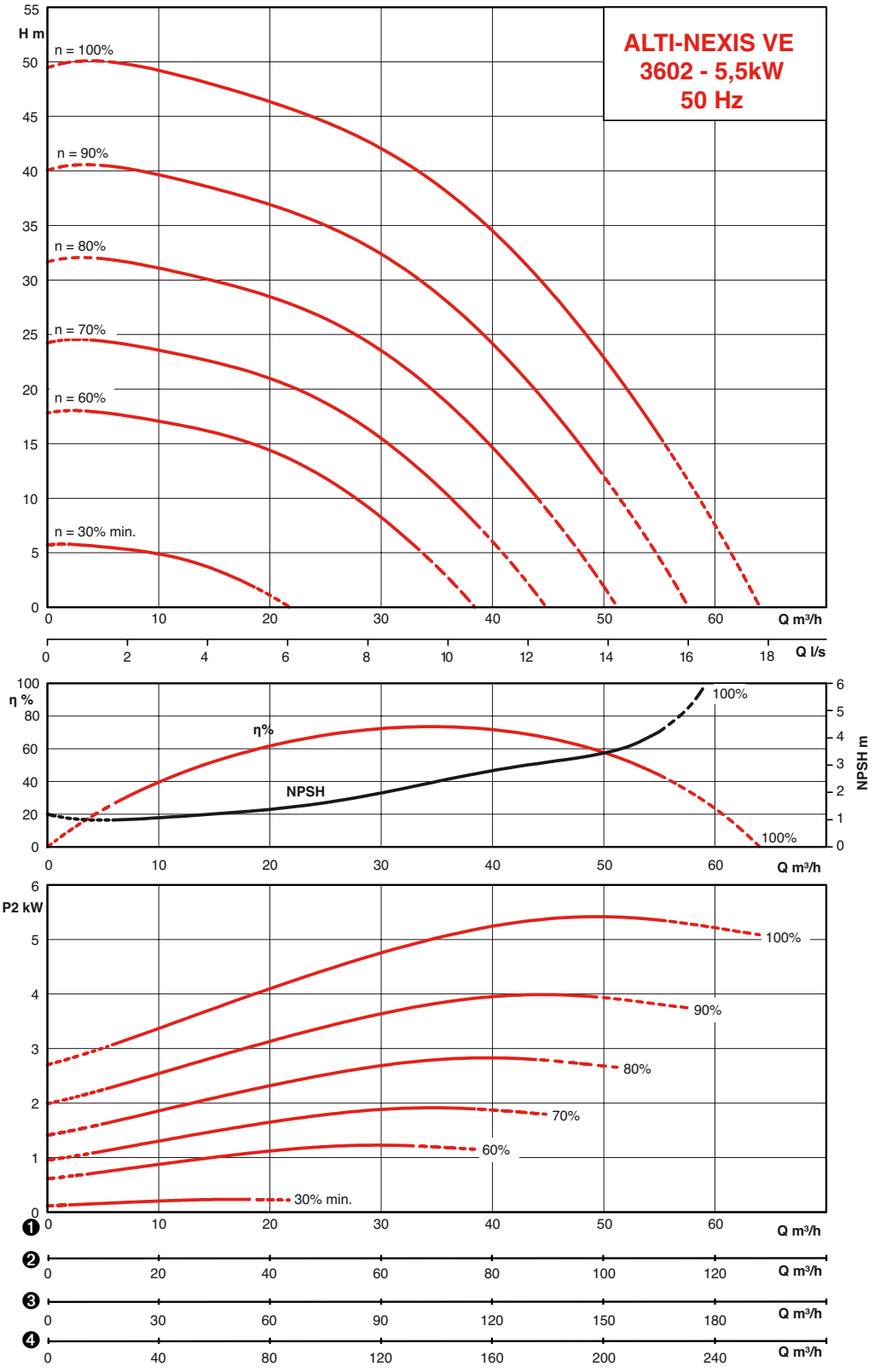

* data derived from the graphs for the pump

ALTI-NEXIS VE

HYDRAULIC PERFORMANCE - ALTI-NEXIS VE - 3600 SERIES*

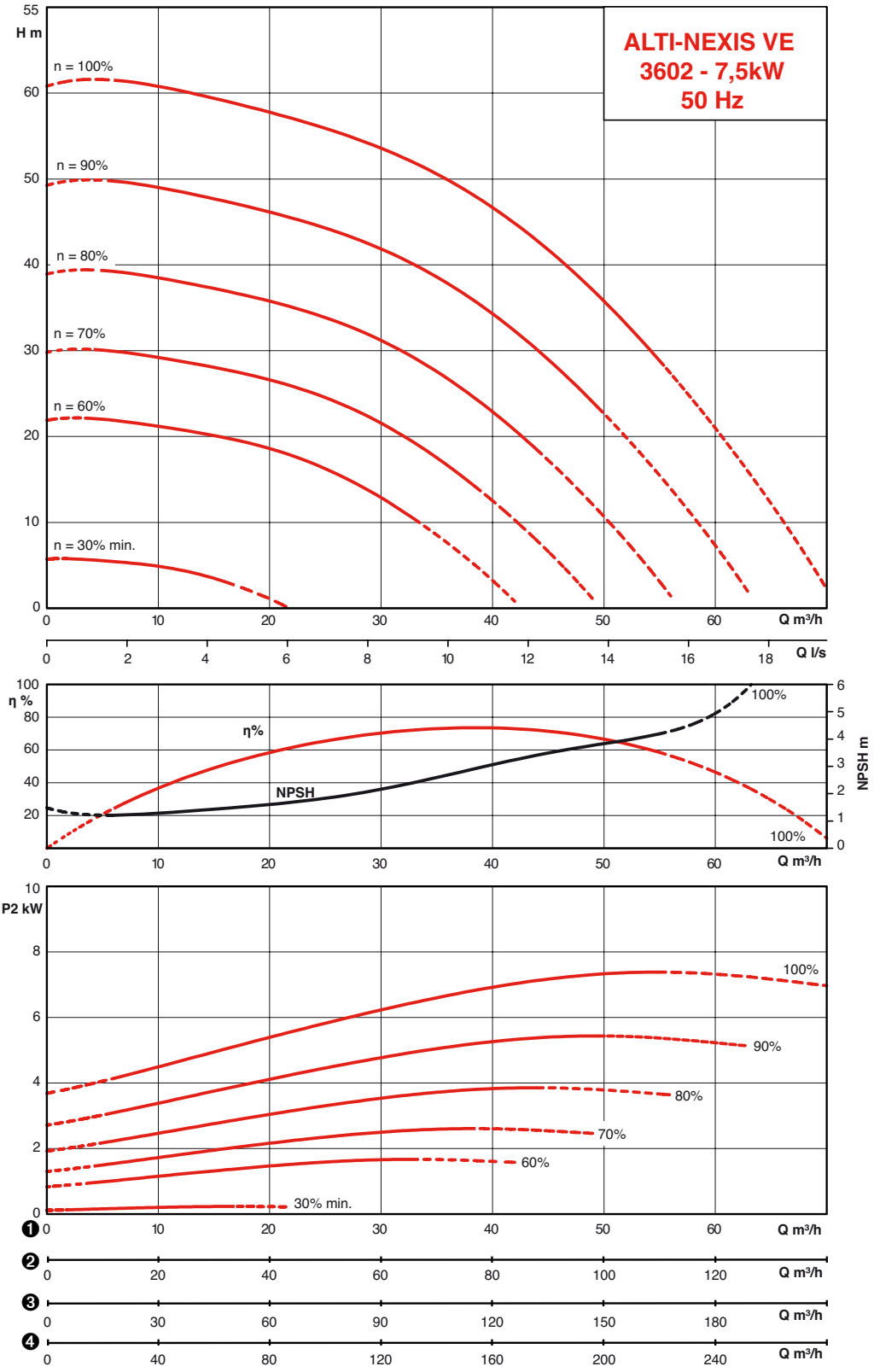

* data derived from the graphs for the pump

HYDRAULIC PERFORMANCE - ALTI-NEXIS VE - 3600 SERIES*

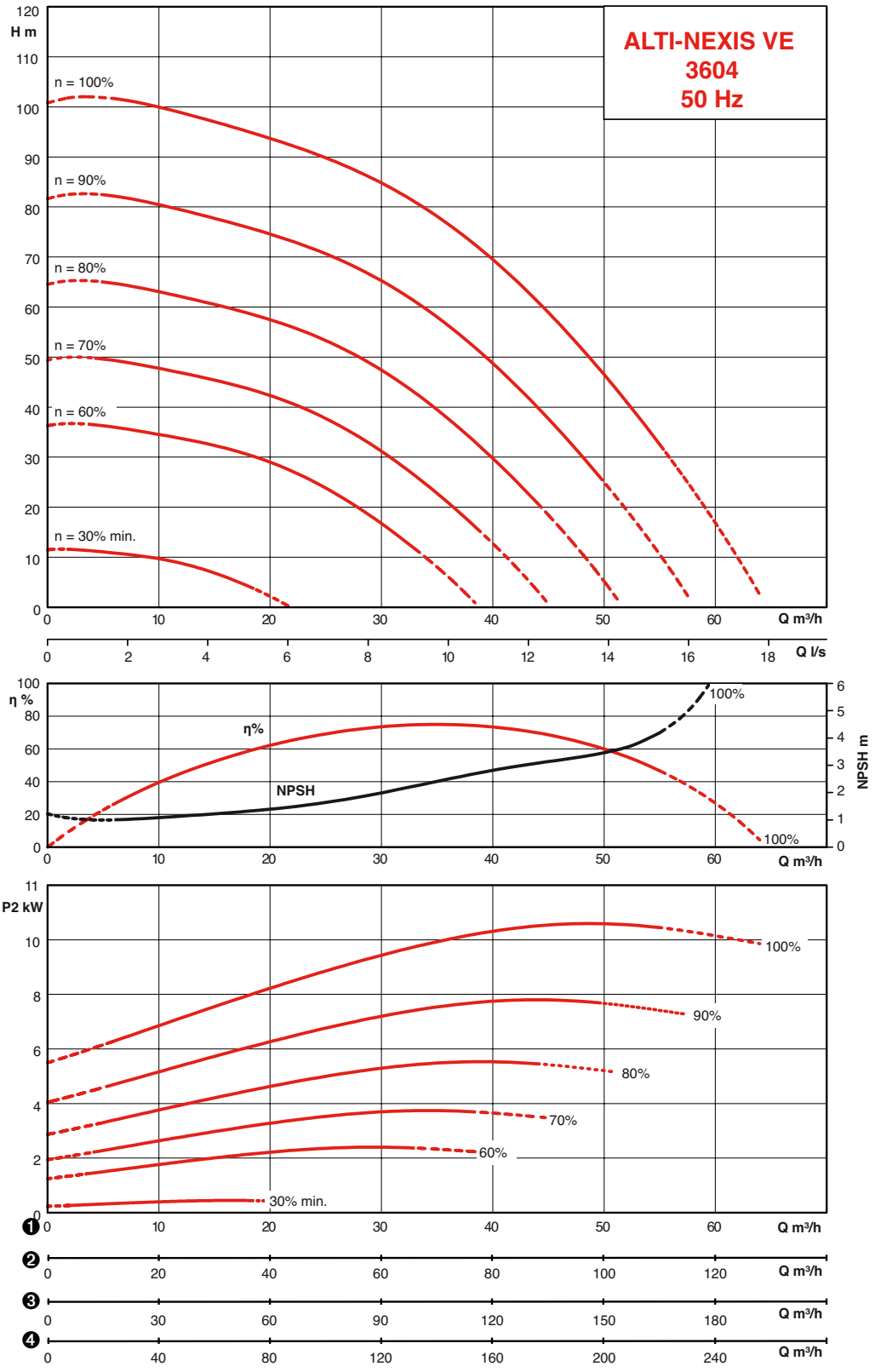

* data derived from the graphs for the pump

ALTI-NEXIS VE

HYDRAULIC PERFORMANCE - ALTI-NEXIS VE - 3600 SERIES*

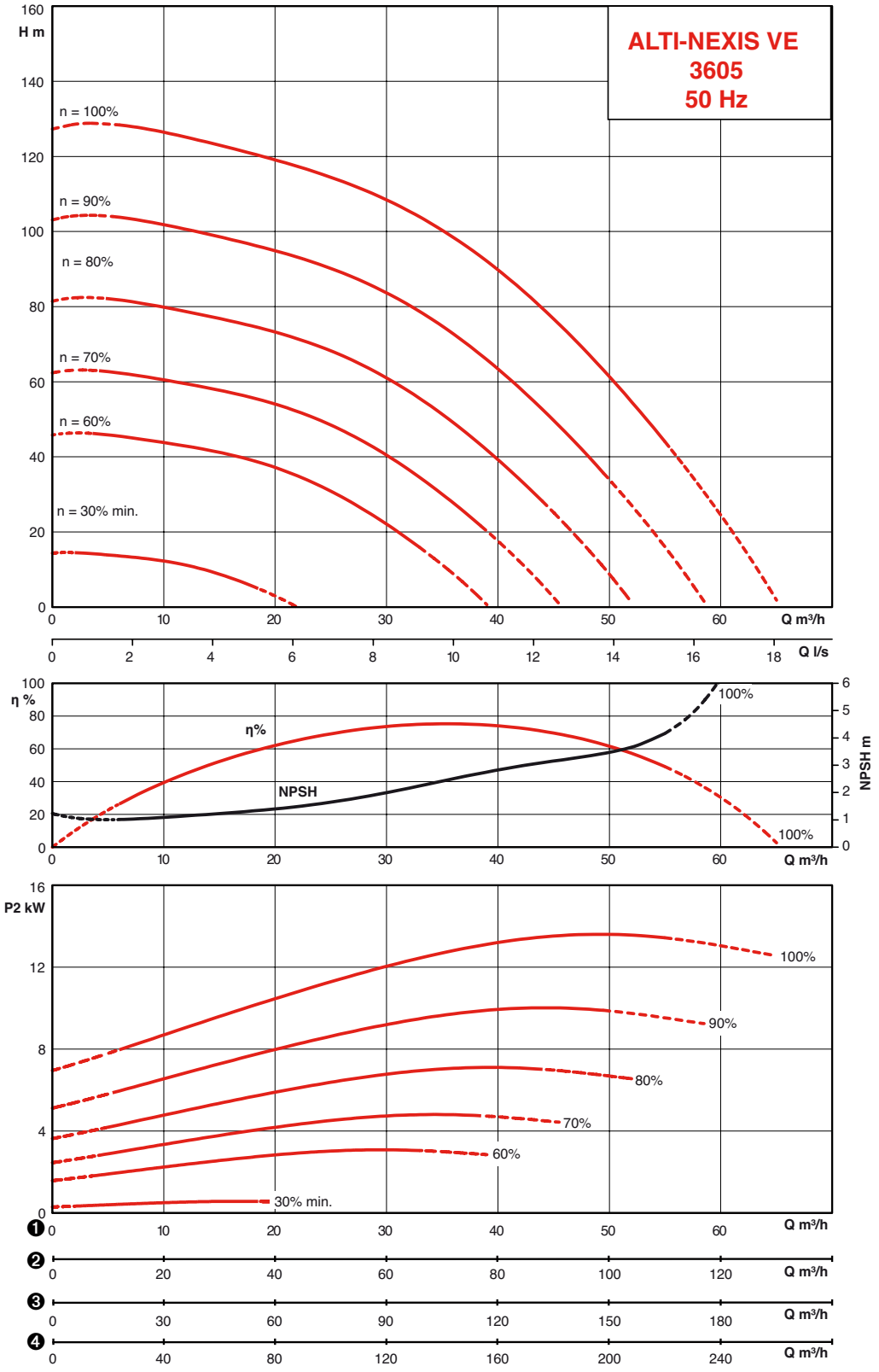

* data derived from the graphs for the pump

HYDRAULIC PERFORMANCE - ALTI-NEXIS VE - 3600 SERIES*

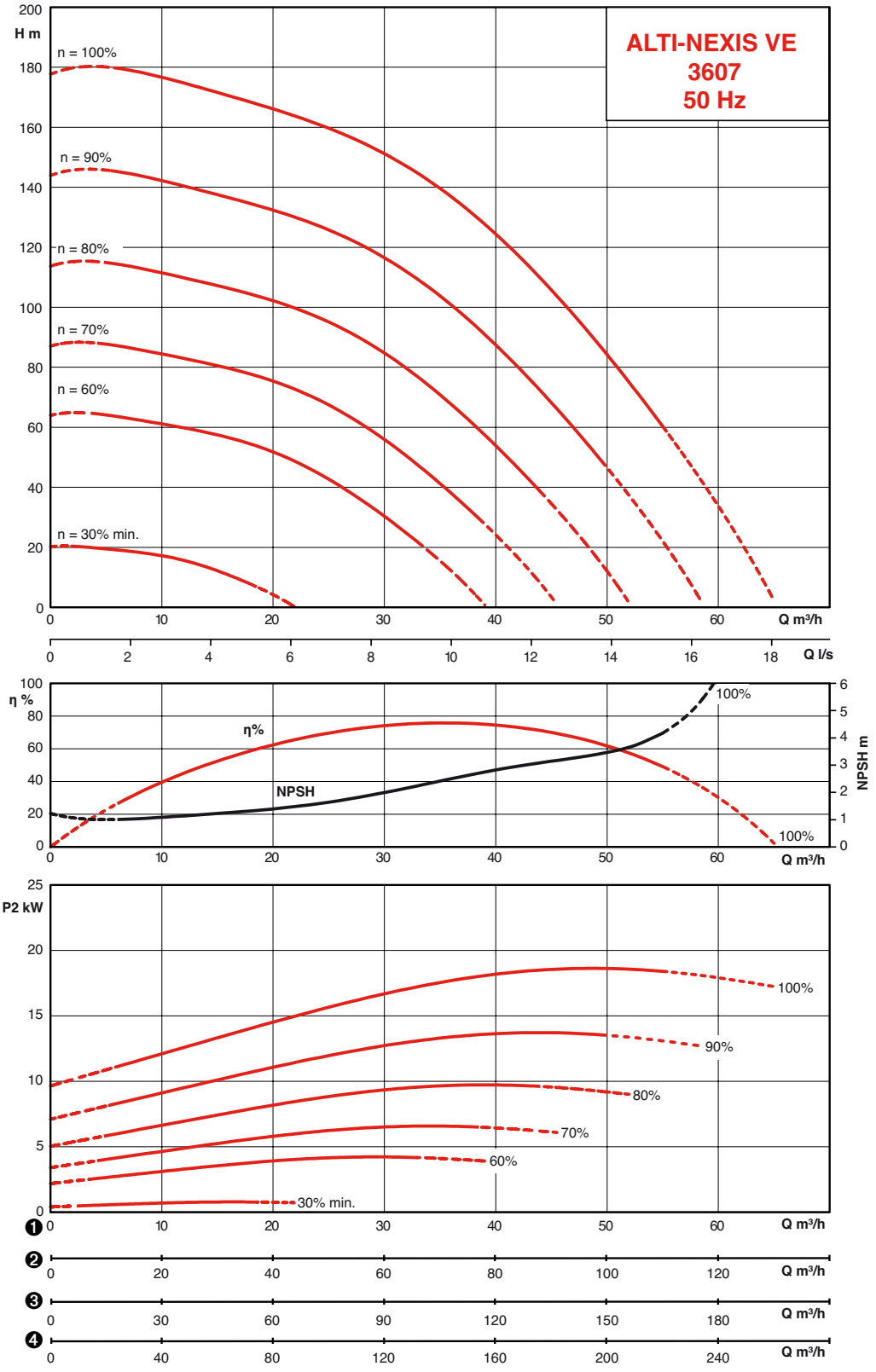

* data derived from the graphs for the pump

ALTI-NEXIS VE

HYDRAULIC PERFORMANCE - ALTI-NEXIS VE - 3600 SERIES*

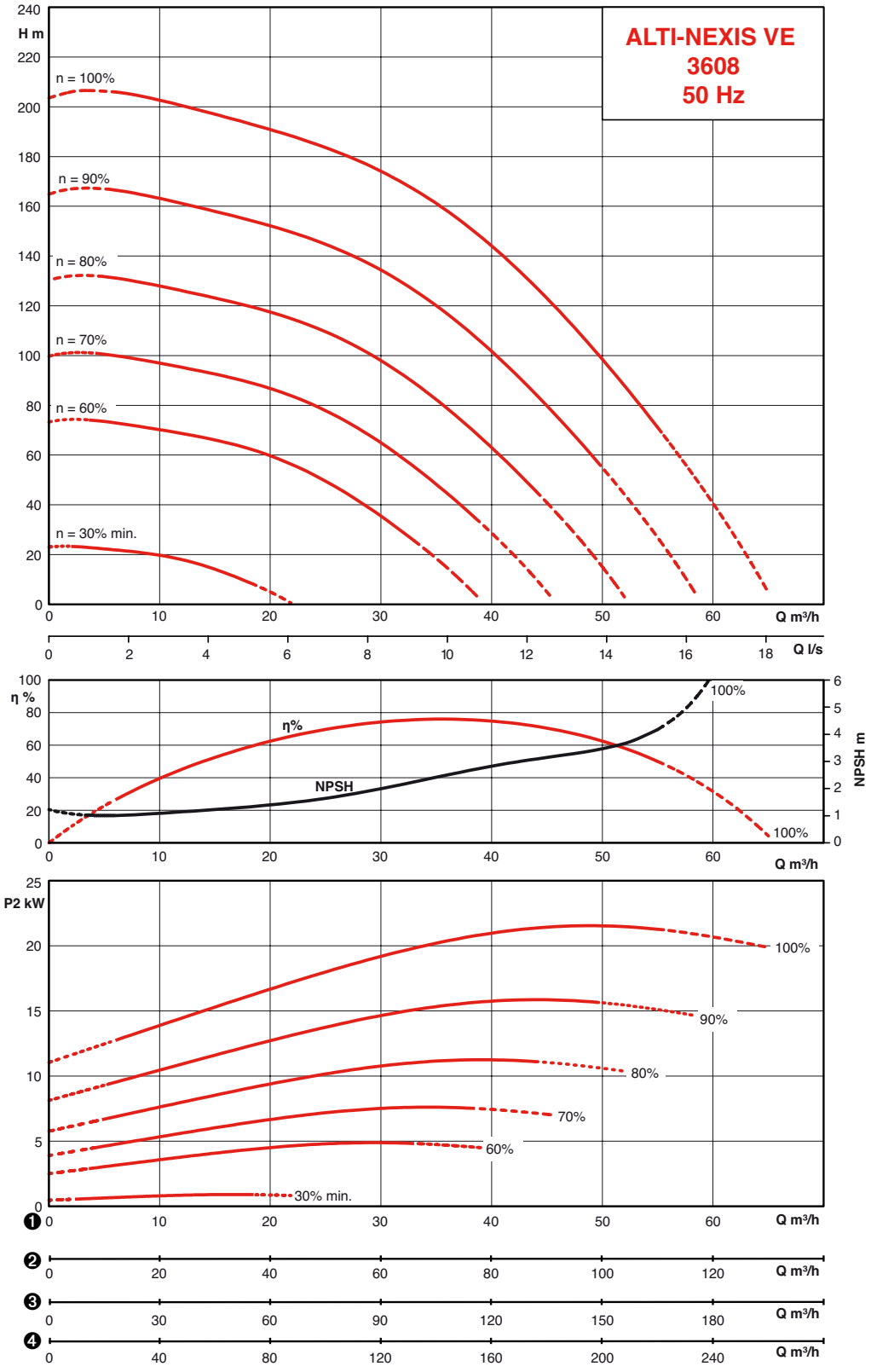

* data derived from the graphs for the pump

HYDRAULIC PERFORMANCE - ALTI-NEXIS VE - 5200 SERIES*

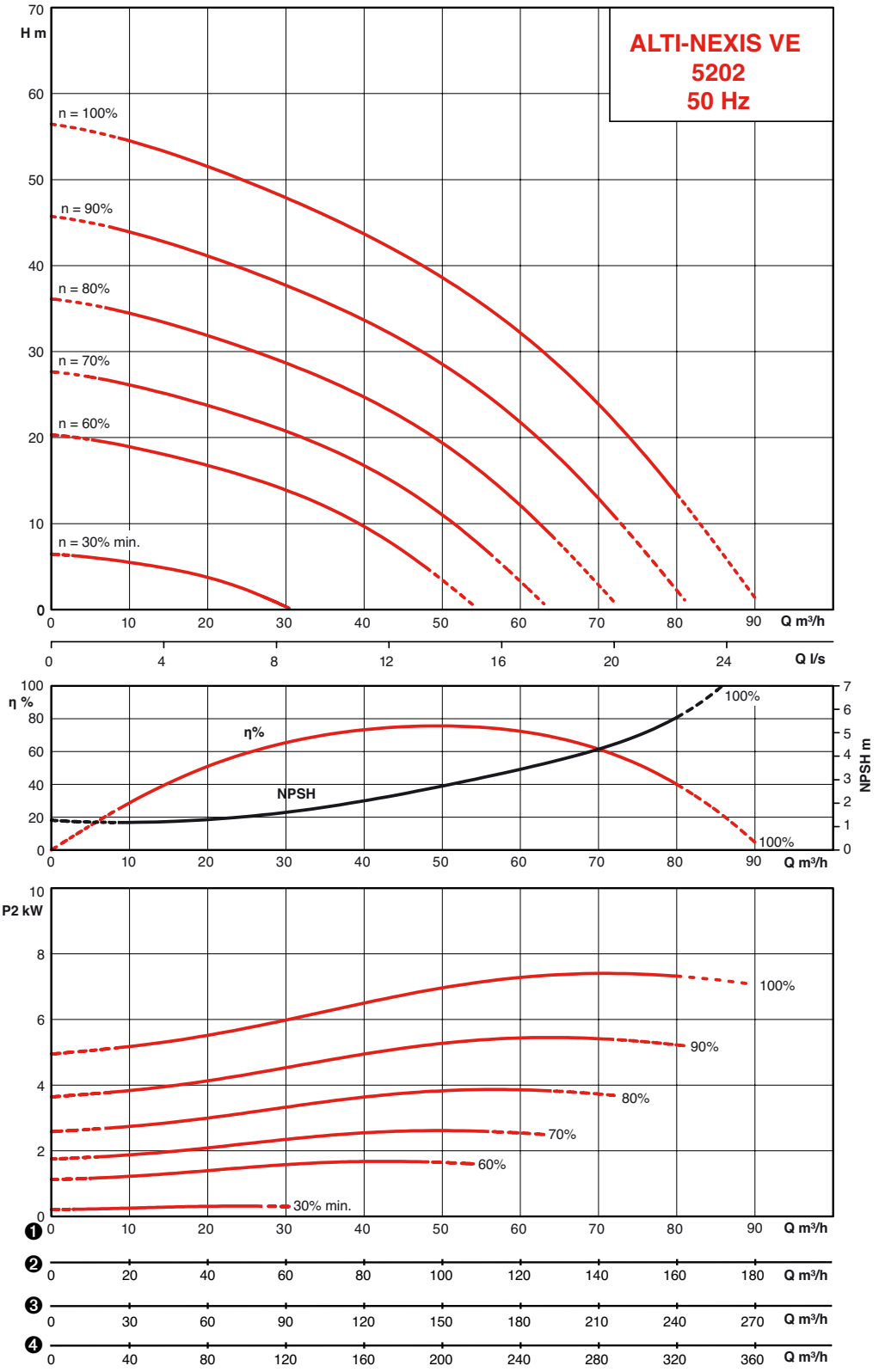

* data derived from the graphs for the pump

ALTI-NEXIS VE

HYDRAULIC PERFORMANCE - ALTI-NEXIS VE - 5200 SERIES*

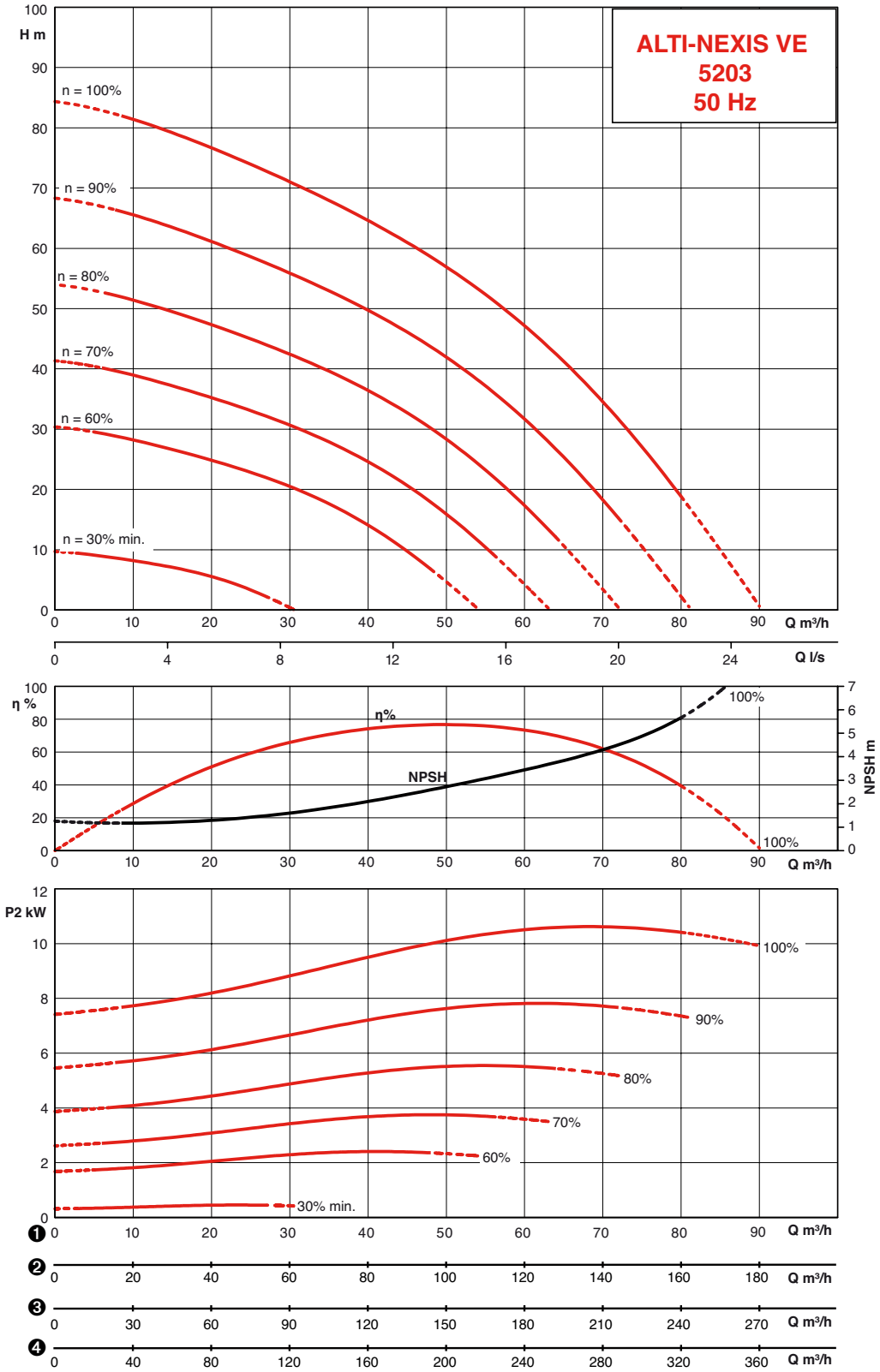

* data derived from the graphs for the pump

HYDRAULIC PERFORMANCE - ALTI-NEXIS VE - 5200 SERIES*

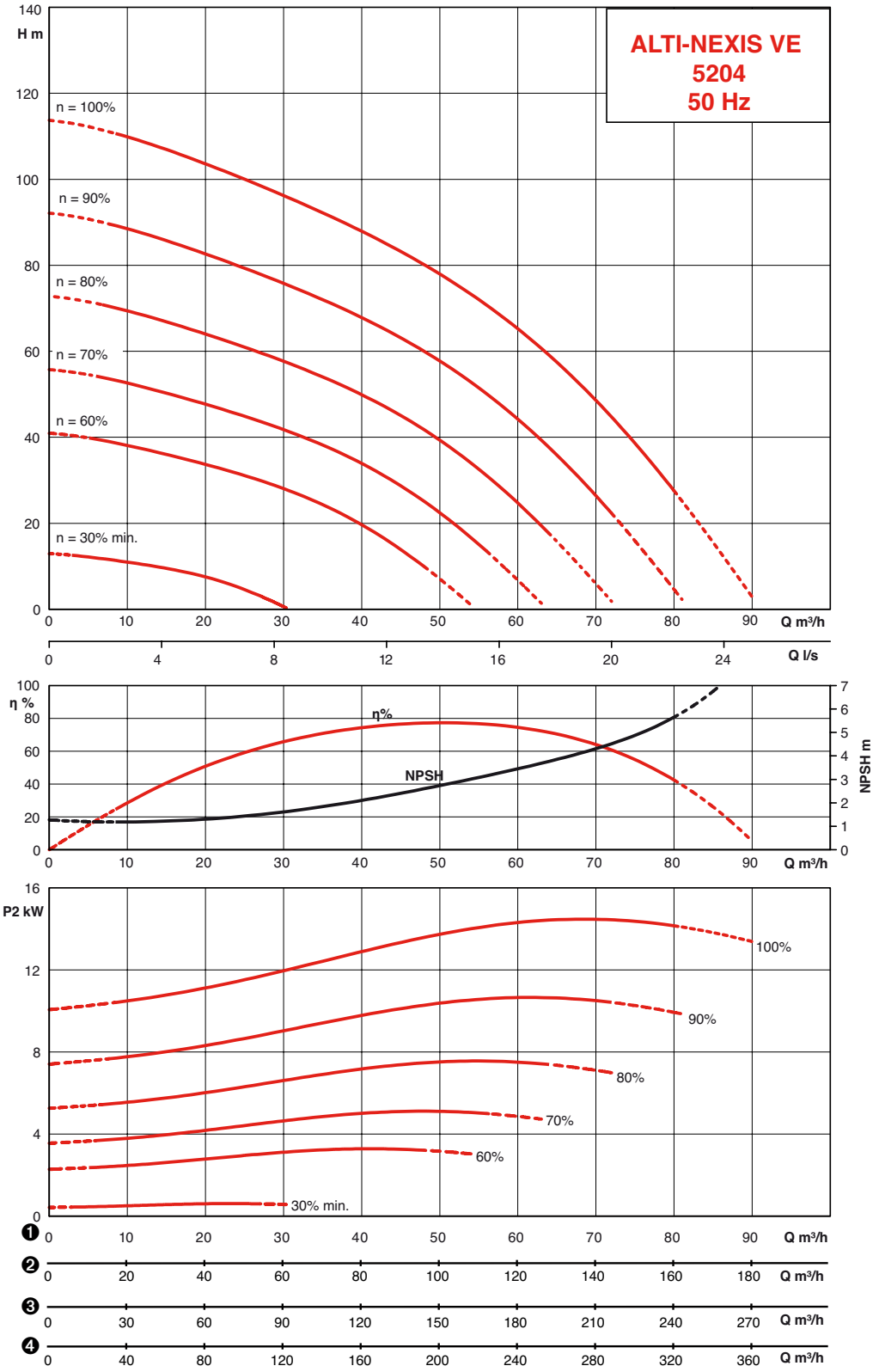

* data derived from the graphs for the pump

ALTI-NEXIS VE

HYDRAULIC PERFORMANCE - ALTI-NEXIS VE - 5200 SERIES*

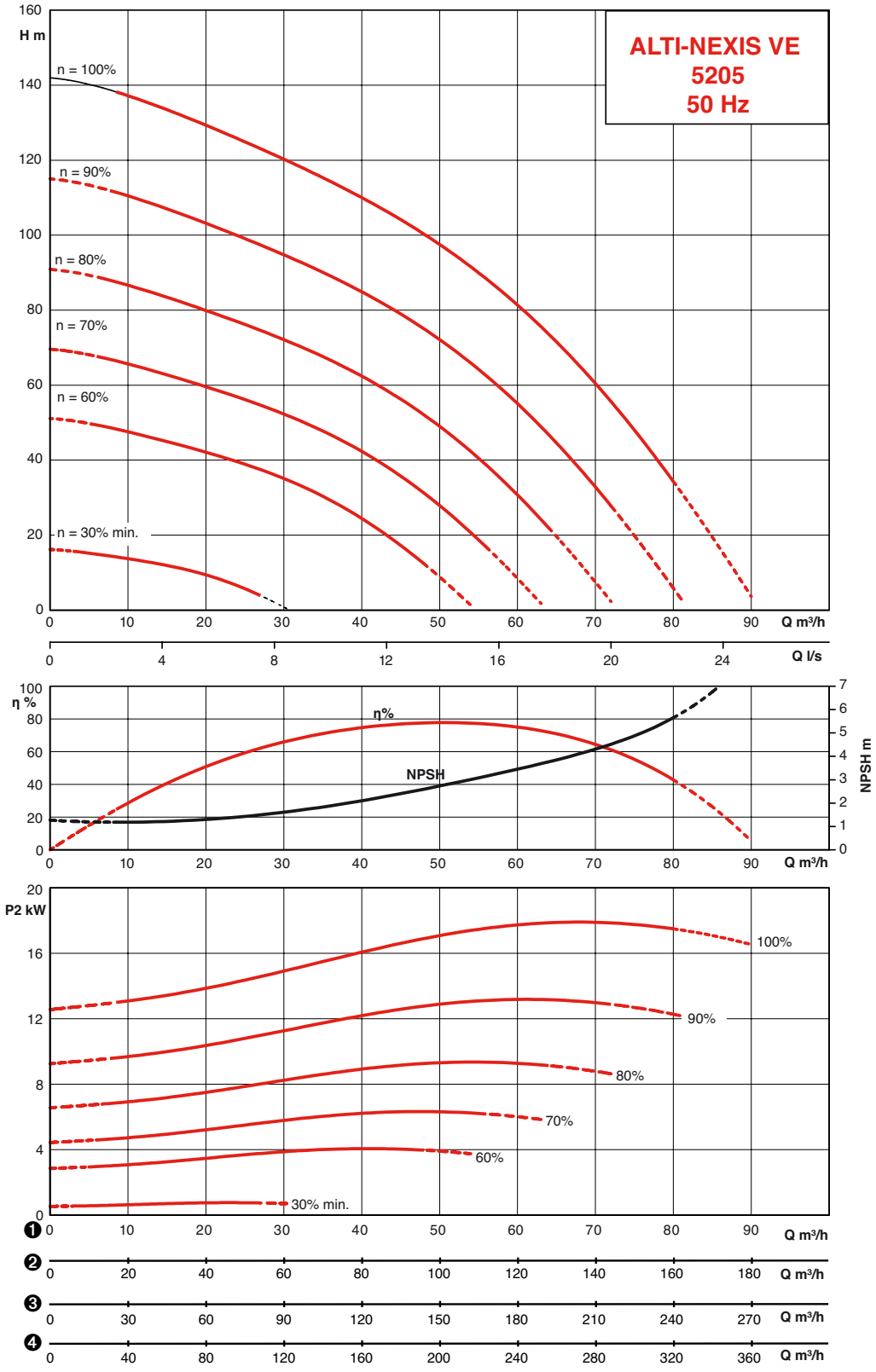

* data derived from the graphs for the pump

HYDRAULIC PERFORMANCE - ALTI-NEXIS VE - 5200 SERIES*

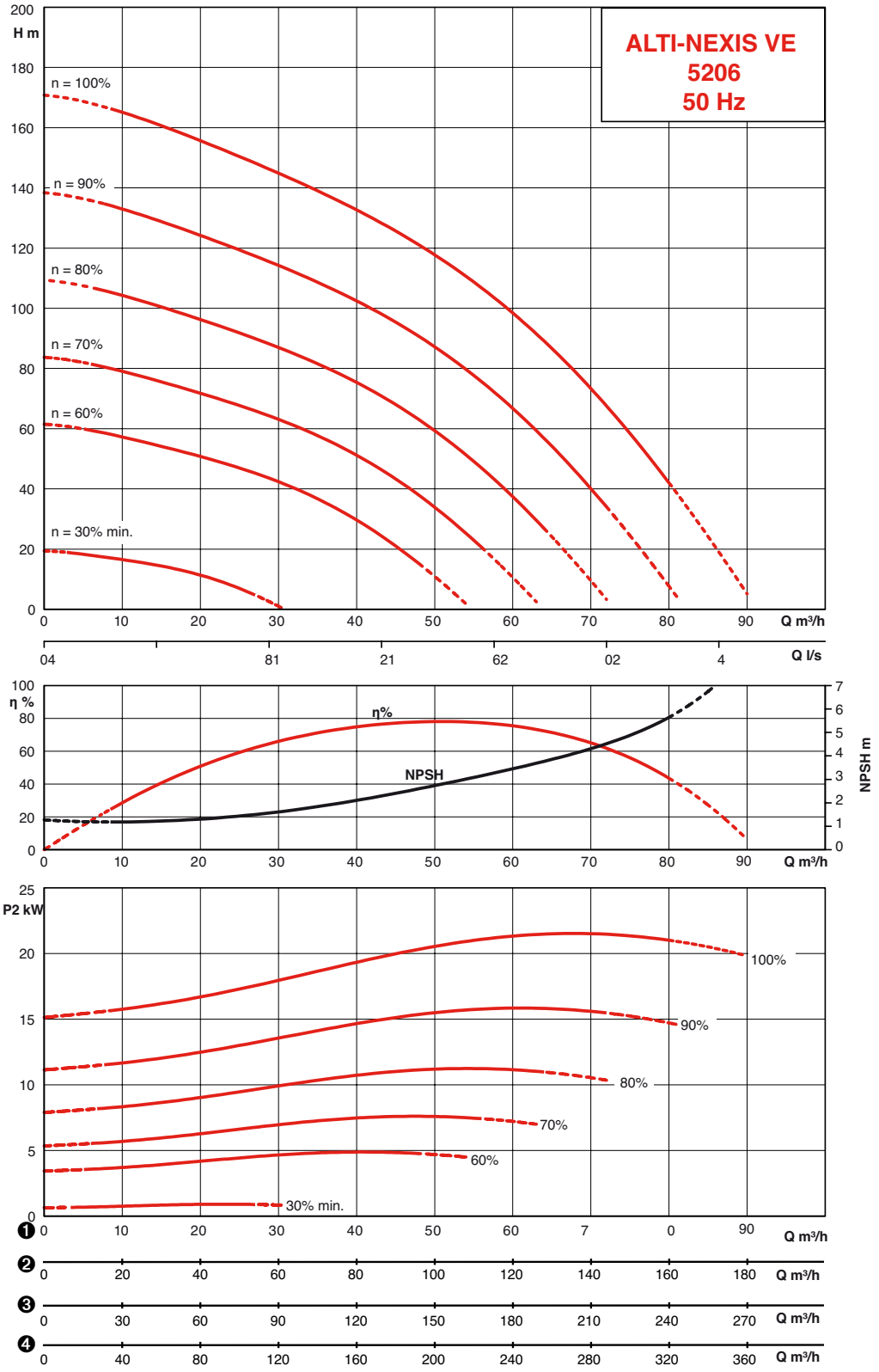

* data derived from the graphs for the pump

ALTI-NEXIS VE

DIMENSIONS - ALTI-NEXIS VE – SCE SERIES

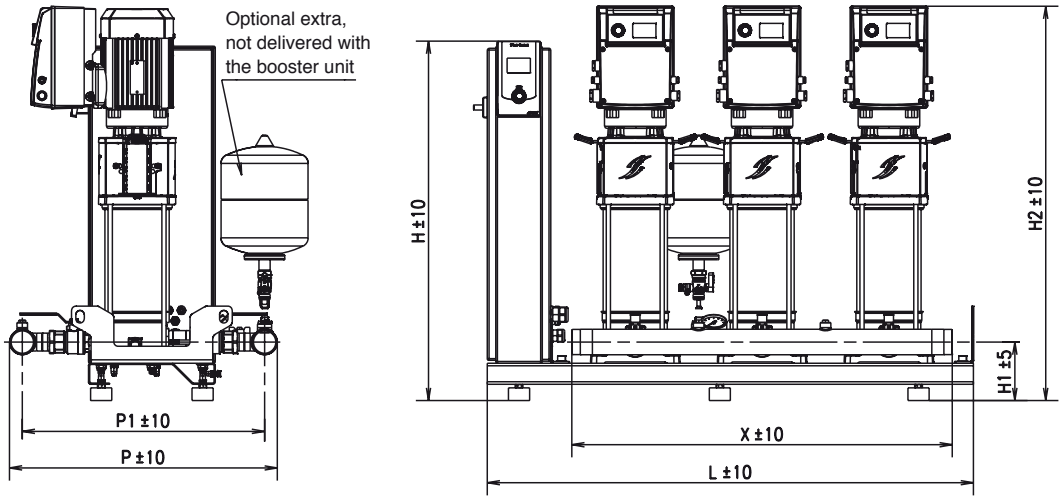

TYPE	Ø pipes	H mm	L mm	P mm	H1 mm	H2 mm	P1 mm	X mm	Net mass Kg
2 PUMPS									
ALTI-NEXIS-VE403-2-SC-16-T4	1"1/2	855	850	610	140	710	561	600	107
ALTI-NEXIS-VE404-2-SC-16-T4	1"1/2	855	850	610	140	755	561	600	111
ALTI-NEXIS-VE405-2-SC-16-T4	1"1/2	855	850	610	140	774	561	600	113
ALTI-NEXIS-VE407-2-SC-16-T4	1"1/2	855	850	610	140	875	561	600	131
ALTI-NEXIS-VE410-2-SC-16-T4	1"1/2	855	850	610	140	953	561	600	135
ALTI-NEXIS-VE602-2-SC-16-T4	2"	855	850	634	140	730	573	600	113
ALTI-NEXIS-VE603-2-SC-16-T4	2"	855	850	634	140	762	573	600	115
ALTI-NEXIS-VE604-2-SC-16-T4	2"	855	850	634	140	840	573	600	133
ALTI-NEXIS-VE606-2-SC-16-T4	2"	855	850	634	140	928	573	600	141
ALTI-NEXIS-VE608-2-SC-16-T4	2"	1055	850	634	140	1038	573	600	198
ALTI-NEXIS-VE611-2-SC-16-T4	2"	1038	850	634	140	1213	573	600	224
ALTI-NEXIS-VE1002-2-SC-16-T4	2"1/2	855	850	780	170	745	704	600	127
ALTI-NEXIS-VE1003-2-SC-16-T4	2"1/2	855	850	780	170	834	704	600	149
ALTI-NEXIS-VE1004-2-SC-16-T4	2"1/2	855	850	780	170	874	704	600	149
ALTI-NEXIS-VE1005-2-SC-16-T4	2"1/2	1055	850	780	170	957	704	600	208
ALTI-NEXIS-VE1006-2-SC-16-T4	2"1/2	1055	850	780	170	1009	704	600	228
ALTI-NEXIS-VE1009/K-2-SC-16-T4	2"1/2	1055	850	780	170	1296	704	600	288
ALTI-NEXIS-VE1602-2-SC-16-T4	3"	1055	850	824	180	844	735	600	175
ALTI-NEXIS-VE1603-3,0-2-SC-16-T4	3"	1055	850	824	180	929	735	600	210
ALTI-NEXIS-VE1603-4,0-2-SC-16-T4	3"	1055	850	824	180	944	735	600	177
ALTI-NEXIS-VE1605/K-2-SC-16-T4	3"	1055	850	824	180	1209	735	600	233
ALTI-NEXIS-VE1606/K-2-SC-16-T4	3"	1055	850	824	180	1259	735	600	243
ALTI-NEXIS-VE2202-3,0-2-SC-16-T4	3"	1055	850	1039	178	838	950	600	288
ALTI-NEXIS-VE2202-4,0-2-SC-16-T4	3"	1055	850	1039	178	855	950	600	308
ALTI-NEXIS-VE2203-2-SC-16-T4	3"	1055	850	1039	178	971	950	600	338
ALTI-NEXIS-VE2204-2-SC-16-T4	3"	1055	850	1039	178	1021	950	600	352
ALTI-NEXIS-VE2205/K-2-SC-16-T4	3"	1070	1250	1039	193	1351	950	1000	511
ALTI-NEXIS-VE3602-5,5-2-SC-16-T4	DN100	1055	900	1249	193	974	1029	800	390
ALTI-NEXIS-VE3602-7,5-2-SC-16-T4	DN100	1055	900	1249	193	974	1029	800	398
ALTI-NEXIS-VE3604/K-2-SC-16-T4	DN100	1070	1250	1249	208	1387	1029	1000	579
ALTI-NEXIS-VE3605/K-2-SC-16-T4	DN100	1070	1250	1249	208	1454	1029	1000	597
ALTI-NEXIS-VE5202-2-SC-16-T4	DN125	1070	1250	1287	243	1086	1037	1000	485
ALTI-NEXIS-VE5203/K-2-SC-16-T4	DN125	1070	1250	1287	243	1451	1037	1000	641
ALTI-NEXIS-VE5204/K-2-SC-16-T4	DN125	1070	1250	1287	243	1551	1037	1000	662
ALTI-NEXIS-VE5205/K-2-SC-16-T4	DN125	1070	1250	1287	243	1651	1037	1000	693
3 PUMPS									
ALTI-NEXIS-VE403-3-SC-16-T4	2"	855	1150	634	140	710	573	900	148
ALTI-NEXIS-VE404-3-SC-16-T4	2"	855	1150	634	140	755	573	900	154
ALTI-NEXIS-VE405-3-SC-16-T4	2"	855	1150	634	140	774	573	900	157
ALTI-NEXIS-VE407-3-SC-16-T4	2"	855	1150	634	140	875	573	900	184
ALTI-NEXIS-VE410-3-SC-16-T4	2"	855	1150	634	140	953	573	900	190
ALTI-NEXIS-VE602-3-SC-16-T4	2"1/2	855	1150	665	140	730	589	900	157
ALTI-NEXIS-VE603-3-SC-16-T4	2"1/2	855	1150	665	140	762	589	900	160
ALTI-NEXIS-VE604-3-SC-16-T4	2"1/2	855	1150	665	140	840	589	900	187
ALTI-NEXIS-VE606-3-SC-16-T4	2"1/2	855	1150	665	140	928	589	900	199
ALTI-NEXIS-VE608-3-SC-16-T4	2"1/2	1055	1150	665	140	1038	589	900	282
ALTI-NEXIS-VE611-3-SC-16-T4	2"1/2	1038	1150	665	140	1213	589	900	317
ALTI-NEXIS-VE1002-3-SC-16-T4	2"1/2	855	1150	780	170	745	704	900	179
ALTI-NEXIS-VE1003-3-SC-16-T4	2"1/2	855	1150	780	170	834	704	900	209
ALTI-NEXIS-VE1004-3-SC-16-T4	2"1/2	855	1150	780	170	874	704	900	212
ALTI-NEXIS-VE1005-3-SC-16-T4	2"1/2	1055	1150	780	170	957	704	900	295
ALTI-NEXIS-VE1006-3-SC-16-T4	2"1/2	1055	1150	780	170	1009	704	900	319
ALTI-NEXIS-VE1009/K-3-SC-16-T4	2"1/2	1055	1150	780	170	1296	704	900	409
ALTI-NEXIS-VE1602-3-SC-16-T4	DN100	1055	1150	986	180	844	766	900	271
ALTI-NEXIS-VE1603-3,0-3-SC-16-T4	DN100	1055	1150	986	180	929	766	900	332
ALTI-NEXIS-VE1603-4,0-3-SC-16-T4	DN100	1055	1150	986	180	944	766	900	274
ALTI-NEXIS-VE1605/K-3-SC-16-T4	DN100	1055	1150	986	180	1209	766	900	358
ALTI-NEXIS-VE1606/K-3-SC-16-T4	DN100	1055	1150	986	180	1259	766	900	373
ALTI-NEXIS-VE2202-3,0-3-SC-16-T4	DN100	1055	1150	1195	178	838	975	900	424
ALTI-NEXIS-VE2202-4,0-3-SC-16-T4	DN100	1055	1150	1195	178	855	975	900	454
ALTI-NEXIS-VE2203-3-SC-16-T4	DN100	1055	1150	1195	178	971	975	900	499
ALTI-NEXIS-VE2204-3-SC-16-T4	DN100	1055	1150	1195	178	1021	975	900	521
ALTI-NEXIS-VE2205/K-3-SC-16-T4	DN100	1070	1750	1195	193	1351	975	1500	768
ALTI-NEXIS-VE3602-5,5-3-SC-16-T4	DN125	1055	1200	1306	193	974	1056	1100	573

DIMENSIONS - ALTI-NEXIS VE – SCE SERIES

TYPE	Ø	H	L	P	H1	H2	P1	X	Net mass
	pipes	mm	mm	mm	mm	mm	mm	mm	Kg
ALTI-NEXIS-VE3602-7,5-3-SC-16-T4	DN125	1055	1200	1306	193	974	1056	1100	583
ALTI-NEXIS-VE3604/K-3-SC-16-T4	DN125	1070	1750	1306	208	1387	1056	1500	861
ALTI-NEXIS-VE3605/K-3-SC-16-T4	DN125	1070	1750	1306	208	1454	1056	1500	889
ALTI-NEXIS-VE5202-3-SC-16-T4	DN150	1070	1750	1349	243	1086	1064	1500	704
ALTI-NEXIS-VE5203/K-3-SC-16-T4	DN150	1070	1750	1349	243	1451	1064	1500	945
ALTI-NEXIS-VE5204/K-3-SC-16-T4	DN150	1070	1750	1349	243	1551	1064	1500	976
ALTI-NEXIS-VE5205/K-3-SC-16-T4	DN150	1070	1750	1349	243	1651	1064	1500	1022
4 PUMPS									
ALTI-NEXIS-VE403-4-SC-16-T4	2"1/2	855	1450	665	140	710	589	1200	192
ALTI-NEXIS-VE404-4-SC-16-T4	2"1/2	855	1450	665	140	755	589	1200	200
ALTI-NEXIS-VE405-4-SC-16-T4	2"1/2	855	1450	665	140	774	589	1200	205
ALTI-NEXIS-VE407-4-SC-16-T4	2"1/2	855	1450	665	140	875	589	1200	240
ALTI-NEXIS-VE410-4-SC-16-T4	2"1/2	855	1450	665	140	953	589	1200	248
ALTI-NEXIS-VE602-4-SC-16-T4	2"1/2	855	1450	665	140	730	589	1200	200
ALTI-NEXIS-VE603-4-SC-16-T4	2"1/2	855	1450	665	140	762	589	1200	204
ALTI-NEXIS-VE604-4-SC-16-T4	2"1/2	855	1450	665	140	840	589	1200	240
ALTI-NEXIS-VE606-4-SC-16-T4	2"1/2	855	1450	665	140	928	589	1200	256
ALTI-NEXIS-VE608-4-SC-16-T4	2"1/2	1055	1450	665	140	1038	589	1200	363
ALTI-NEXIS-VE611-4-SC-16-T4	2"1/2	1038	1450	665	140	1213	589	1200	396
ALTI-NEXIS-VE1002-4-SC-16-T4	3"	855	1450	806	170	745	717	1200	230
ALTI-NEXIS-VE1003-4-SC-16-T4	3"	855	1450	806	170	834	717	1200	274
ALTI-NEXIS-VE1004-4-SC-16-T4	3"	855	1450	806	170	874	717	1200	274
ALTI-NEXIS-VE1005-4-SC-16-T4	3"	1055	1450	806	170	957	717	1200	385
ALTI-NEXIS-VE1006-4-SC-16-T4	3"	1055	1450	806	170	1009	717	1200	408
ALTI-NEXIS-VE1009/K-4-SC-16-T4	3"	1055	1450	806	170	1296	717	1200	498
ALTI-NEXIS-VE1602-4-SC-16-T4	DN100	1055	1450	986	180	844	766	1200	332
ALTI-NEXIS-VE1603-3,0-4-SC-16-T4	DN100	1055	1450	986	180	929	766	1200	418
ALTI-NEXIS-VE1603-4,0-4-SC-16-T4	DN100	1055	1450	986	180	944	766	1200	336
ALTI-NEXIS-VE1605/K-4-SC-16-T4	DN100	1055	1450	986	180	1209	766	1200	448
ALTI-NEXIS-VE1606/K-4-SC-16-T4	DN100	1055	1450	986	180	1259	766	1200	468
ALTI-NEXIS-VE2202-3,0-4-SC-16-T4	DN125	1055	1450	1257	178	838	1007	1200	563
ALTI-NEXIS-VE2202-4,0-4-SC-16-T4	DN125	1055	1450	1257	178	855	1007	1200	603
ALTI-NEXIS-VE2203-4-SC-16-T4	DN125	1055	1450	1257	178	971	1007	1200	663
ALTI-NEXIS-VE2204-4-SC-16-T4	DN125	1055	1450	1257	178	1021	1007	1200	692
ALTI-NEXIS-VE2205/K-4-SC-16-T4	DN125	1070	2250	1257	193	1351	1007	2000	1031
ALTI-NEXIS-VE3602-5,5-4-SC-16-T4	DN150	1055	1500	1372	193	974	1087	1400	748
ALTI-NEXIS-VE3602-7,5-4-SC-16-T4	DN150	1055	1500	1372	193	974	1087	1400	764
ALTI-NEXIS-VE3604/K-4-SC-16-T4	DN150	1070	2250	1372	208	1387	1087	2000	1141
ALTI-NEXIS-VE3605/K-4-SC-16-T4	DN150	1070	2250	1372	208	1454	1087	2000	1178
ALTI-NEXIS-VE5202-4-SC-16-T4	DN200	1070	2250	1455	243	1086	1115	2000	929
ALTI-NEXIS-VE5203/K-4-SC-16-T4	DN200	1070	2250	1455	243	1451	1115	2000	1249
ALTI-NEXIS-VE5204/K-4-SC-16-T4	DN200	1070	2250	1455	243	1551	1115	2000	1290
ALTI-NEXIS-VE5205/K-4-SC-16-T4	DN200	1070	2250	1455	243	1651	1115	2000	1352

DIMENSIONS - ALTI-NEXIS VE – CCE SERIES

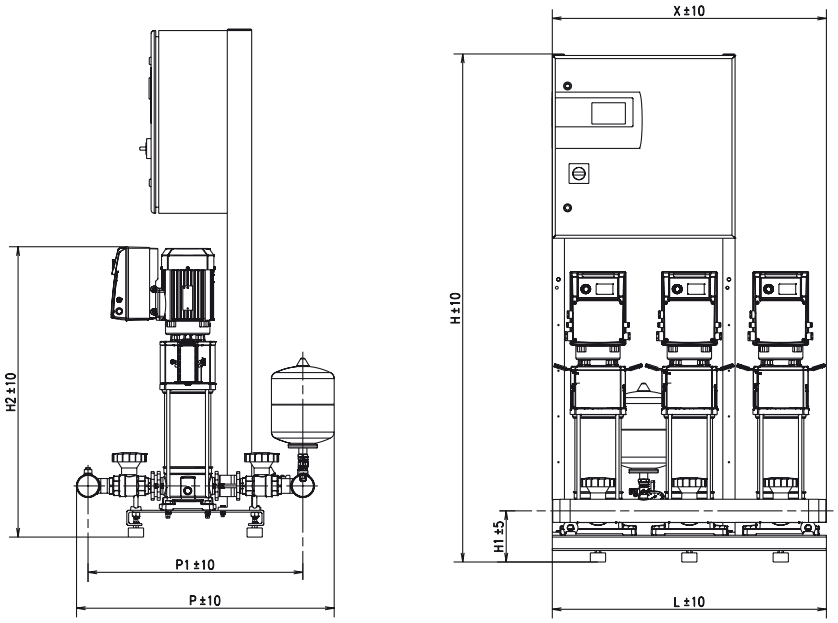

TYPE	Ø	H	L	P	H1	H2	P1	X
	pipes	mm	mm	mm	mm	mm	mm	mm
From 2 to 6 pumps				**Details on request**				

ALTI-NEXIS VE

ACCESSORIES

- Water supply by-pass, for direct connection to the mains water supply, contact us for further details.
- Vibration damping rubber sleeves
- Pressure regulators
- Isolating valves
- Kit to protect against low water levels (mains supply)
- Kit to protect against low water levels (on tank)
- Stainless steel back flange kit (sold in pairs)
- Plug kit for stainless steel pipes
- Plug kit for pipes electro-galvanised steel
- 8-litre to 500-litre bladder tank



• Vibration-damping sleeves

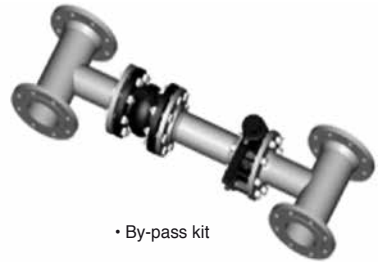

• By-pass kit



• Kit Protection against low water levels (mains supply)



• Back flange kit



• Isolating valve



• Plug for stainless steel pipes



• Pressure regulators

SPECIAL FEATURES

a) Assembly

– Booster pump must be placed on a flat surface on vibration absorbing feet.
– Intake and outlet pipes can be connected either on the right or the left.
– Switch board installed separately depending on the installed rating.
– A one-metre gap must be left around the booster pump to ensure safe maintenance.

b) Packaging

On pallet.

RANGE OF USE

Flow rates up to:	**78 m³/h**
Manometric head up to:	**160 m CE**
Max. operating pressure:	**16 bars**
Max. water temperature:	**50°C**
Ambient temperature :	**40°C**

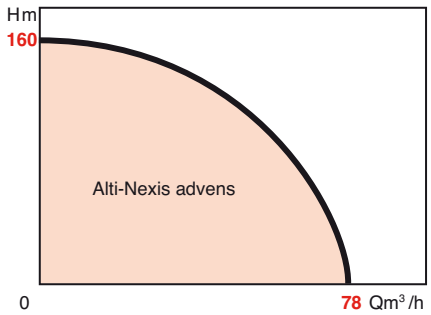

ALTI-NEXIS ADVENS

HIGH PERFORMANCE BOOSTER PUMPS

range of booster pumps fitted with multi-stage stainless steel Nexis Advens pumps with built-in electronic speed controllers: Collective and industrial uses 2 poles - 50/60 Hz

APPLICATIONS

Providing and maintaining pressure to water distribution systems where pressure is inadequate or non-existent :

- Distributing and boosting water entirely automatically in blocks of flats and offices, hotels, hospitals, shopping centres and also industrial systems.
- Pumping drinking water and hot water, water for cooling, firefighting or other uses, which does not chemically or mechanically attack the materials used and does not contain abrasive or fibrous substances.

AVANTAGES

New integrated design for increased safety of the whole hydraulic installation.

- **Cable conduit (cables protected).**
- **Built-in lifting point.**
- **Removable plastic covers to protect sensitive components.**
- **A robust high-performance Installation with multi-stage pumps in stainless steel from the Nexis Advens range and a built-in air-cooled frequency converter.**
- **CE high-performance motor (yield greater than the limited IE4 values in CEI TS 60034-31 Ed.1).**
- **High-performance hydraulic pumps with variable speed.**
- **Hydraulics of the booster pump with little loss of head.**
- **Large rang of variation of the frequency converter from 25 Hz to 60 Hz max.**
- **Maximum pressure regulation quality provided by a pump control program in the automatic system Sce system.**
- **Intuitive interface with LCD screen and single button on SCe box.**

• Alti-Nexis advens 3 pumps



GLOBAL EFFICIENCY BY SALMSON®

EVS

Certified **ACS**

ALTI-NEXIS ADVENS

DESIGN

A high-performance water distribution installation, ready to connect (not self-priming) with two to four Nexis Advens multi-stage stainless steel pumps mounted vertically and in parallel. Each pump is fitted with a synchronous motor with permanent magnets with performance greater than IE4, and built-in frequency converter.

This booster pump fitted with the new SCe box has protective covers on sensitive components to safeguard the operation of the device.

- Height-adjustable frame in galvanised steel, fitted with shock absorbers to protect against vibration and premature wear of the appliance, built-in lifting points, and a built-in cable conduit.
- Removable plastic protective covers.
- Pipework: all pipes in stainless steel, suitable for connection to all types of commonly used pipework. The sizes of the pipework should be chosen to suit the complete hydraulic performance of the booster unit.
- Pumps: two to four pumps from the Nexis Advens ranges 4.., 6.., 10.., 16... mounted in parallel. Frequency converters mounted on the pump motor allow all the pumps in these ranges to be adjusted continuously between 25 Hz and 60 Hz max.
- All the components of the pumps in contact with the fluid are in stainless steel; others materials are available on demand.
- All parts in contact with the fluid are ACS approved.
- Hydraulic components: each pump is fitted with an gate valve on the outlet and inlet, and with an non-return valve on the outlet.
- Pressurised membrane tank (accessories): 8 L/PN16 mounted on the output pipe, with a butyl rubber membrane, suitable for food use. For control and inspection purposes, this tank is fitted with a shut-off tap with drain and an recirculation valve.
- Pressure Sensor: 4 to 20 mA, mounted on the output pipe for adjustment with the Smart Controller SC box.
- Pressure display: manometer (ø 63 mm) mounted on the output pipe; the digital display of the output pressure is also available on the LCD alphanumeric screen of the Smart Controller SC.
- Control box/controller:

The booster pump is fitted with a Smart Controller SC in series

- Removable ball valves on inlet and outlet.
- The design of the installation ensures optimum protection of the adjustment components and the sensors against the cable breaking and avoids premature wear.

MATERIALS

- Impellers, diffusers and staged housing in 1.4307 stainless steel
- Housing of pump in 1.4301 stainless steel
- Shaft in 1.4057 stainless steel
- 1.4404 sleeve with seal
- O-rings in EPDM (FKM rings on demand).
- Pipework in stainless steel 1.4301
- Removable covers in plastic.

EQUIPMENT

- Boosting unit ready to connect, factory-assembled, checked for operation and watertightness.
- Packaging.
- Installing and operating instructions.

IDENTIFICATION

ALTI-NEXIS - ADVENS 1003 - 2 - SC - 16 - T4

Version
Booster unit fitted with Nexis Advens pumps

Type of pump :
Electronic vertical pump fitted with synchronous motor.

Nominal flow rate and number of adjustable speeds of each pump

Motor power of pumps only when there are two motor powers for the same number of adjustable pump speeds

Operating mode of the module
2 : 2 pumps in cascade
3 : 3 pumps in cascade
4 : 4 pumps in cascade

Automatic system :
SC : Advanced electronic controls

Maximum operating pressure: 16 - 25 bars

Three-phase supply voltage: T4 : 3~ 400 V

ALTI-NEXIS ADVENS

EQUIPMENT / OPERATION

- Two to four pumps on the booster unit fitted with Nexis Advens 4.., 6.., 10.. and two pumps on the booster unit fitted with Nexis Advens 16, with CE high-performance motor and continuous speed adjustment by a frequency converter built into each pump.
- Optional protection against running dry with manometer on the inlet.

FEATURES

- Mains supply 3~400 V ±10 %, 50 Hz; 3~380 V ±10 %, 60 Hzz
- Max. temperature of the fluid +50 °C (+70 °C optional)
- Max. ambient temperature 40 °C
- Operating pressure 16 bars (25 bars optional)
- Mains pressure 10 bars
- Threaded nominal diameters of connection G1”1/2-G2”-G2”1/2
- Nominal diameters of connection with flanges DN100
- Range of speeds of rotation from 1 500 à 3 770 tr/min
- Protection class: IP 54 (SCe regulation appliance)
- Protected by mains fuse A, AC 3 depending on the power of the motor and the EVU directives.

Permissible fluids transported (other fluids on demand):

- Drinking water and domestic hot water
- Cooling water
- Firefighting water

ALTI-NEXIS ADVENS

DESCRIPTION OF THE BOOSTER UNIT

• ALTi-NEXIS ADVENS

1 - SC control box
2 - Pumps (Nexis Advens type)
3 - Intake pipe
4 - Output pipe
5 - Non-return valve
6 - Shut-off valves
7 - Adjustable anti-vibration buffers
8 - Cover (non available for the 52)

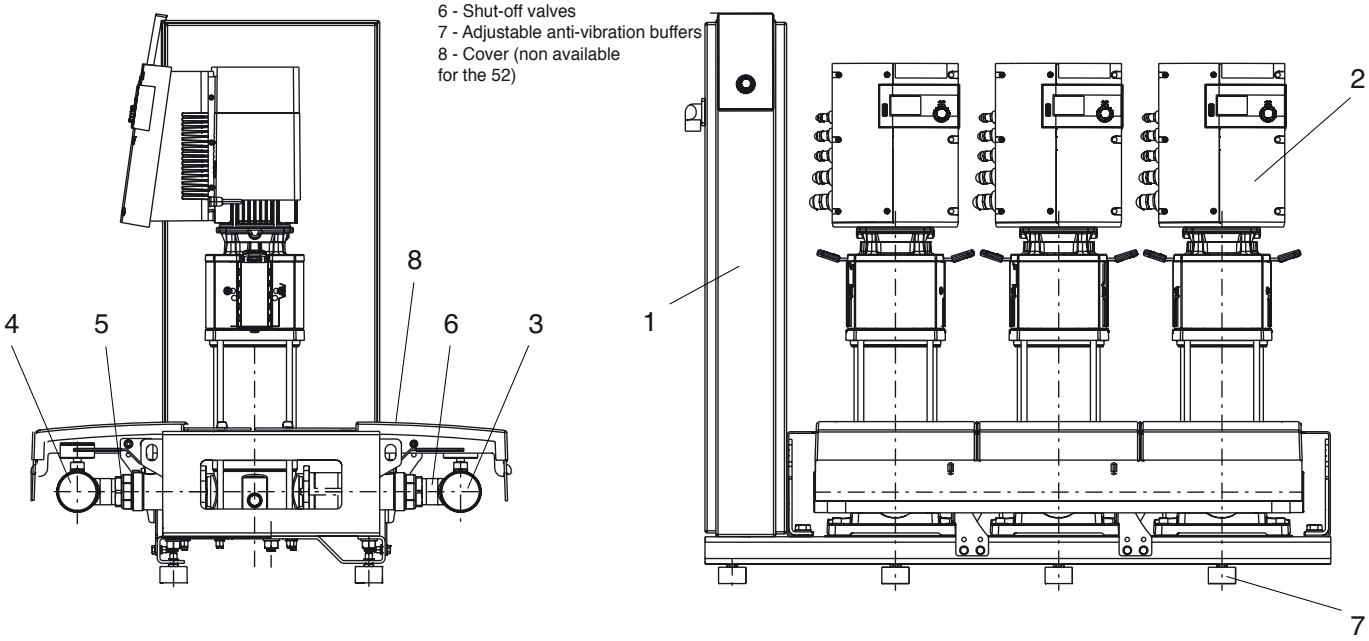

BASIC CONSTRUCTION 0

	Alti-Nexis Advens with SCe box			
Nexis Advens Pump	4	6	10	16
	Fitted with mechanical seal with cartridge			
Non-return valves	Valve between flanges (little loss of head)			
	Interchangeable cartridge			
Shut-off valves	Full bore ball valve			
	Quarter-turn			
Pipes	Stainless steel 304			
Valve/pipe assembly	Screwed + O-ring			
8L bladder tank on the output pipe	Optional extra *			

* a tank must be installed near the booster pump for optimum operation. Its volume should be appropriate to the installation

ESSENTIAL ACCESSORIES DEPENDING ON THE SOURCE OF THE WATER SUP

		Alti-Nexis advens		
Components		2 pumps	3 pumps	4 pumps
Protection against running dry	Pressure switch (if connected to the mains water system)	1	1	1
	Float switch (if connected to a reservoir)	1	1	1

EQUIPMENT

- **Example with 3-pump Alti-Nexis Advens. Same representation with a 2- or 4-pump Alti-Nexis Advens.**

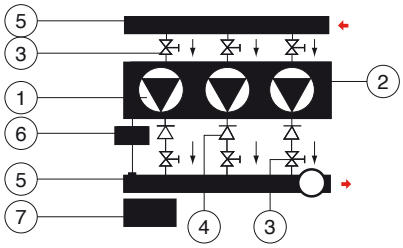

- **From the mains supply**

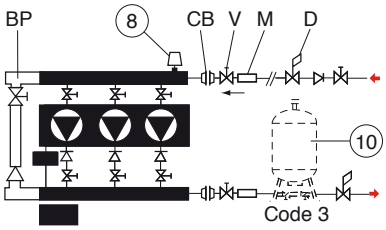

- **From a storage reservoir (under pressure)**

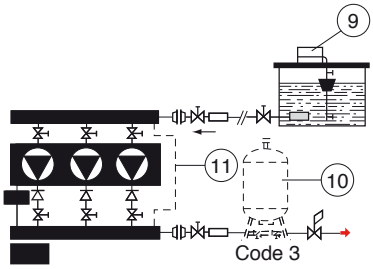

STANDARD KIT (1 to 8):

1 - Two, three or four multi-stage pumps.
2 - Support frame.
3 - Shut-off valves on intake and output of the pumps.
4 - Non-return valves on output of the pumps.
5 - Intake and output pipes.
6 - Pressure transmitter to control pumps.
7 - Control cabinet and fuse box.

ESSENTIAL COMPONENTS:

(depending on the source of water to the booster pump)

8 - Pressure switch to protect against running dry, if booster pump supplied from mains. Or
9 - Float switch, delivered not mounted, if booster pump supplied from reservoir under pressure.
10 - Eight to 2,000-litre bladder tank: specify operating pressure and capacity (optional at extra cost).
11 - Pipework to balance intake from reservoir.

Note: if a by-pass and an intake pressure reducing valve are installed on the booster pump, you are advised to fit the pressure reducing valve between the by-pass and the booster pump.

OPTIONAL COMPONENTS:

(optional at extra cost)

- Direct water supply by-pass, when the pressure of the mains supply is sufficient.
- Rubber anti-vibration sleeves (supplied in pairs).
- Back flanges to be screwed or soldered to pipes (supplied in pairs) depending on the size of the pipes.
- Pressure reducing valve-pressure stabiliser on intake and/or output.
- Shut-off valves.

ALTI-NEXIS ADVENS

SCE CONTROL CABINET (VARIABLE SPEED)

Box with built-in automatic system

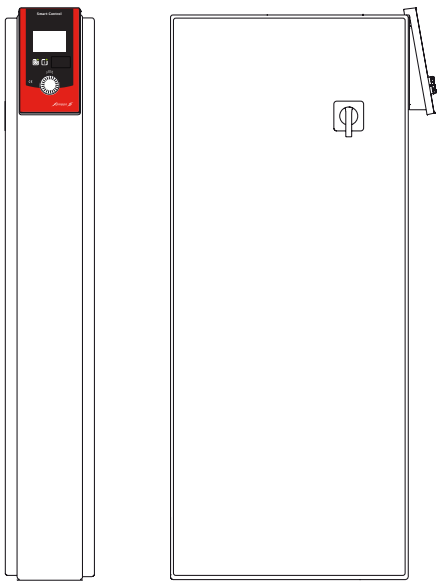

3~ supply: 230/400V (50 Hz)
220 /380 V (60 Hz-option)

DESCRIPTION

On front panel :

- Backlit LCD control and display screen.
- Booster pump power and general fault LED.
- Switch to select and adjust parameters during installation.
- Rotating safety and on/off switch

Inside :

- Magneto-thermal circuit-breaker with cursor to adjust motor current (and Reset button).
- Safety and shut-off transformer.
- General isolating switch, externally controlled by a lockable handle.
- An automatic system board fitted with a microprocessor for total management of the booster pump (start-ups, stops, protections...).
- A power connection terminal board (mains power, motors).
- A terminal board to connect external control devices (pressure transmitter, safety float switch or pressure switch, etc.).
- A document holder built into the door.

OPERATION

The pressure transmitter records the pressure in the output pipe and sends signals to the control box handling the starting and stopping of the pumps in cascade, and their speed of rotation.

Functions of the box:

- to define a backup pump .
- to test pump operation.
- to set dry running alarm.
- to set times for the start and end of pumping.
- to switch off remotely (communication BUS option required).
- 2 sets of adjustments with remote switchover from one to the other (communication BUS option required).
- to adjust on and off thresholds for each pump.
- set-point adjustable remotely.
- 2 filling speeds of pipework for greater safety.
- communication by Bus with a supervision system (Bacnet, Modbus) (optional extra).
- to adjust the behaviour of the booster after an alarm.
- operation statistics.
- to alternate between priority pumps and backup pumps in different ways (timetable, number of start-ups).
- 2 menus: Easy menu for simple and speedy implementation and Expert menu for access to all parameters.
- selection of the mode Auto, Manual or Stop, for each pump.

Control panel

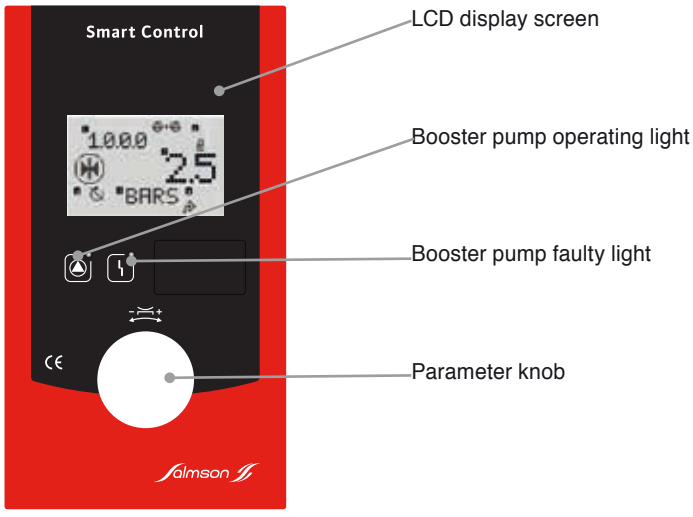

ELECTRICAL CONNECTION PLAN

- X0 = Mains supply

- X1 = Electrical supply to pumps
  - 1-3, pump 1
  - 4-6, pump 2

- X2 = Pump control
  - 1-3, pump 1
  - 4-6, pump 2
  - etc.

- X3 = Dry contacts (messages)
  - 1-3, SSM (centralised fault message)
  - 4-6, SBM (centralised running message)
  - etc.

- X4 = Connections for sensor
  - 1, sensor (In) 2, sensor (+)
  - 3-4, external On/Off
  - 5-6, TLS (protection against running dry)

- X5 = Electrical supply to pumps
  - 1-2, actual pressure (0...10 V)

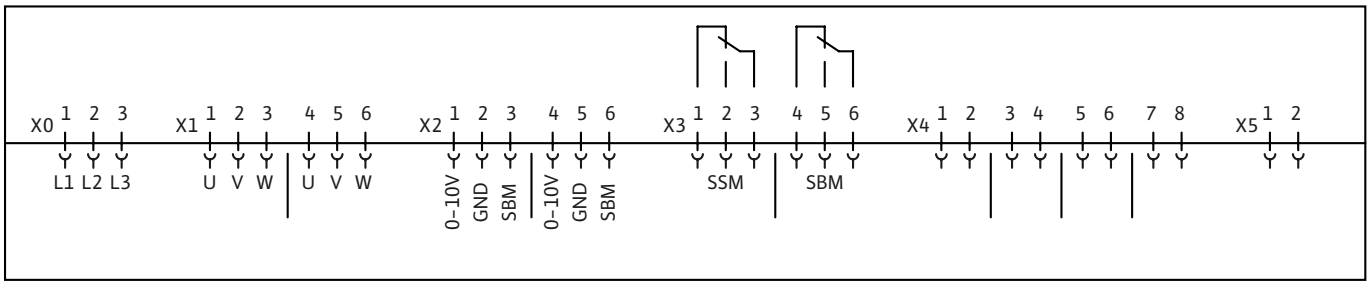

ALTI-NEXIS ADVENS

NEXIS ADVENS - GENERAL PRESET CHART

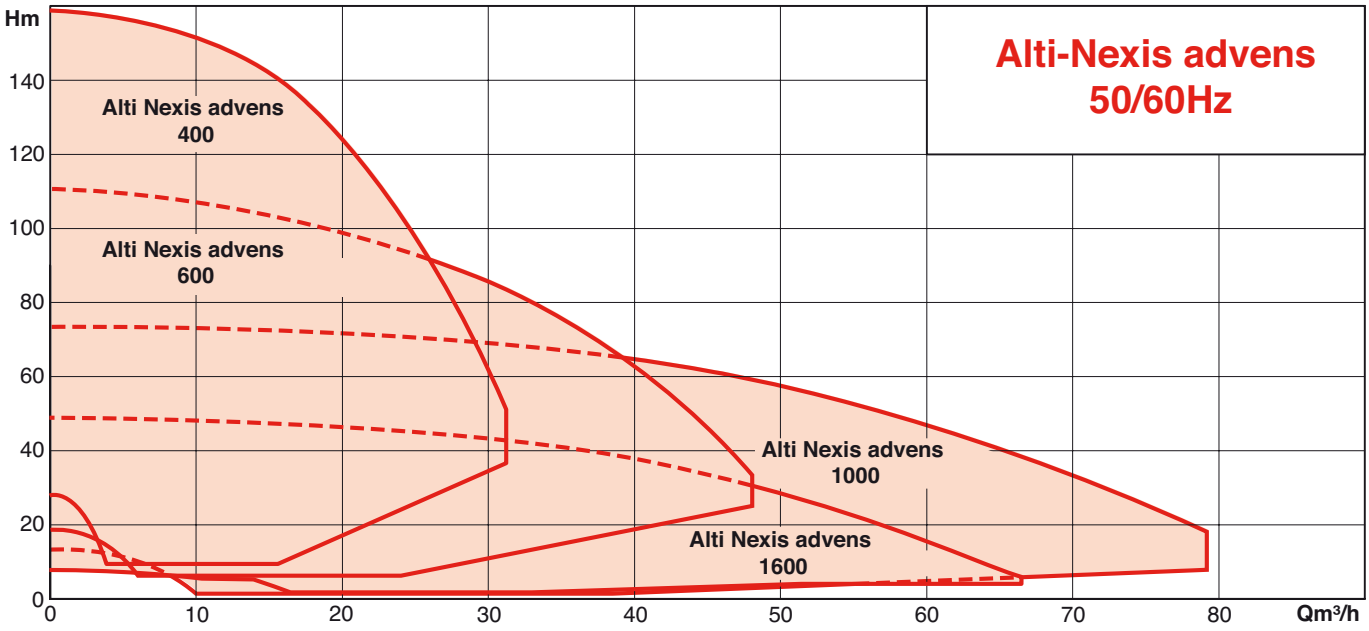

HYDRAULIC PERFORMANCE - ALTI -NEXIS ADVENS - 400 SERIES

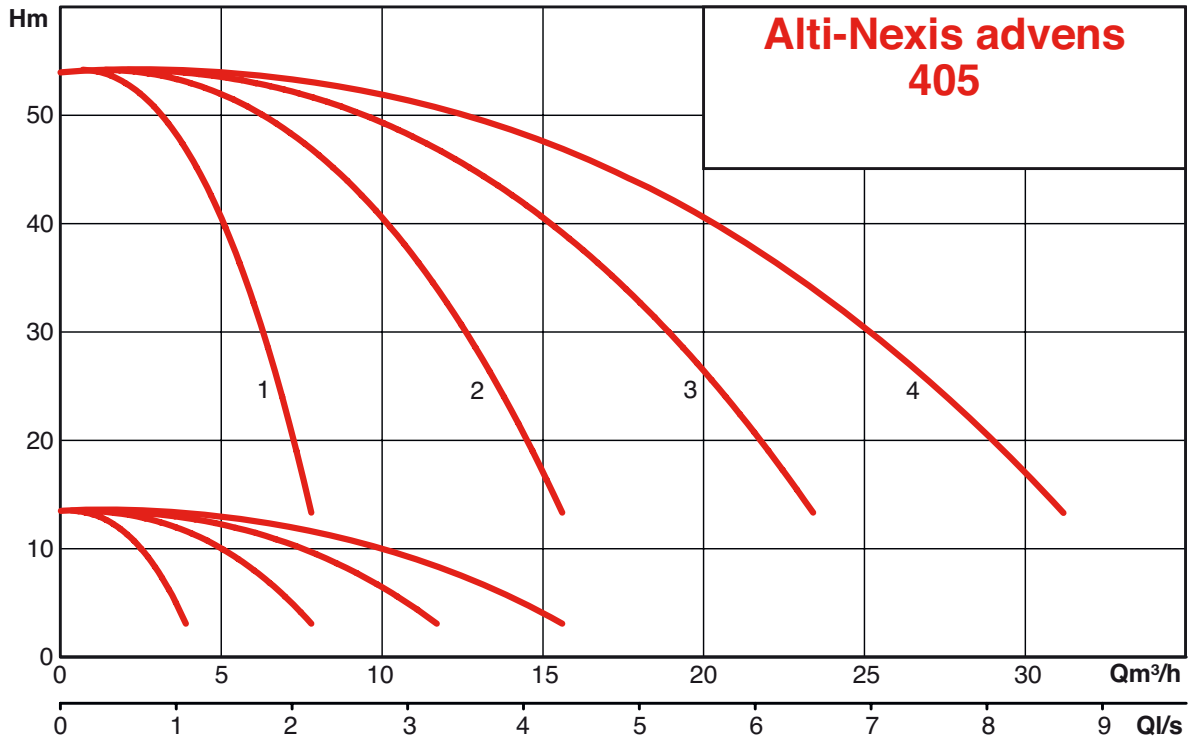

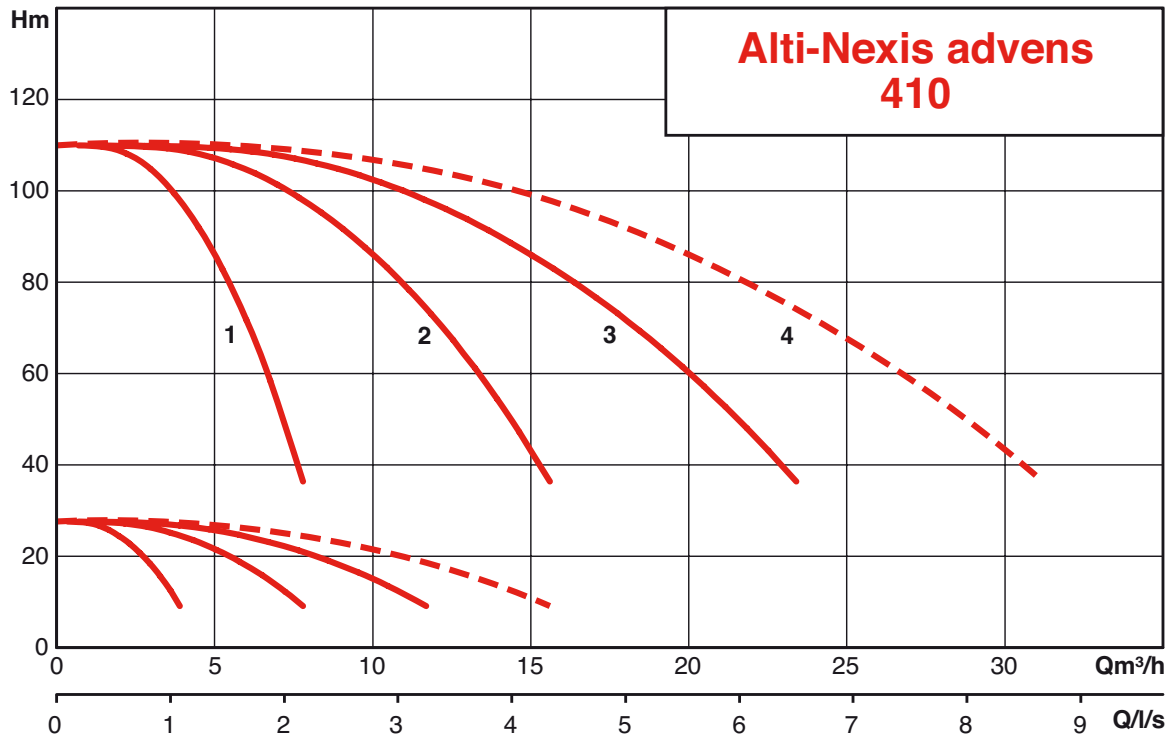

ALTI-NEXIS ADVENS

HYDRAULIC PERFORMANCE - ALTI -NEXIS ADVENS - 400 SERIES

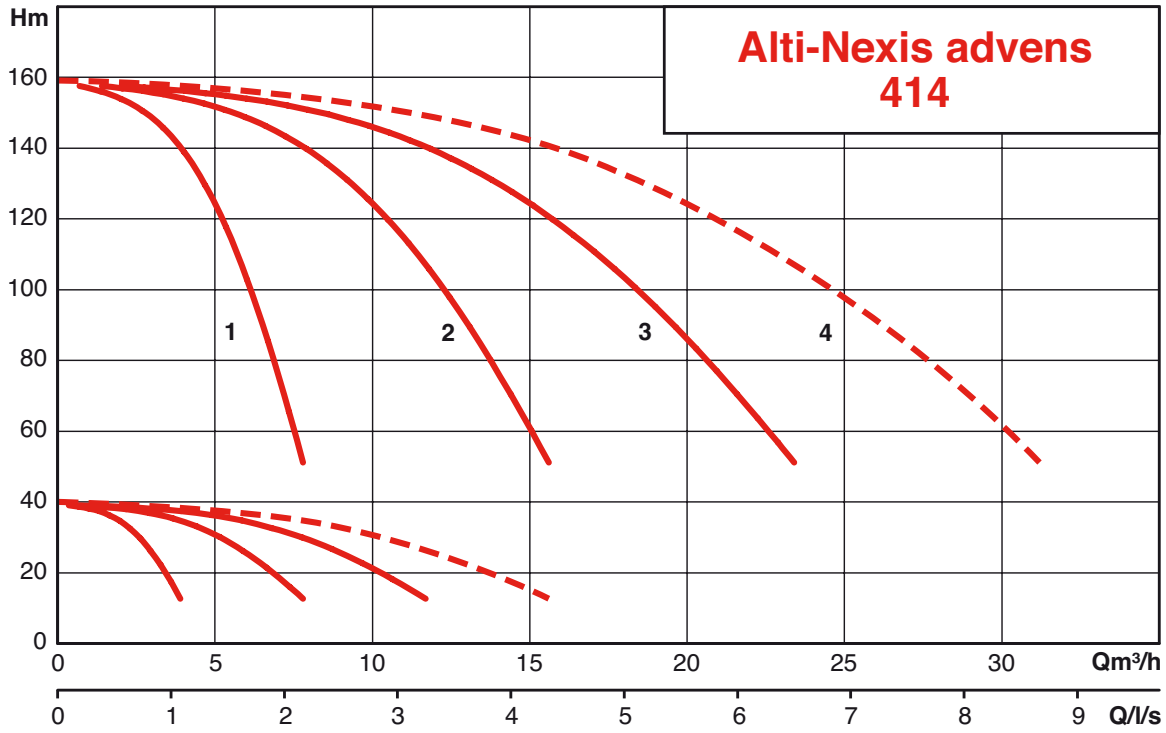

PERFORMANCES HYDRAULIQUES - ALTI-NEXIS ADVENS - SÉRIE 600

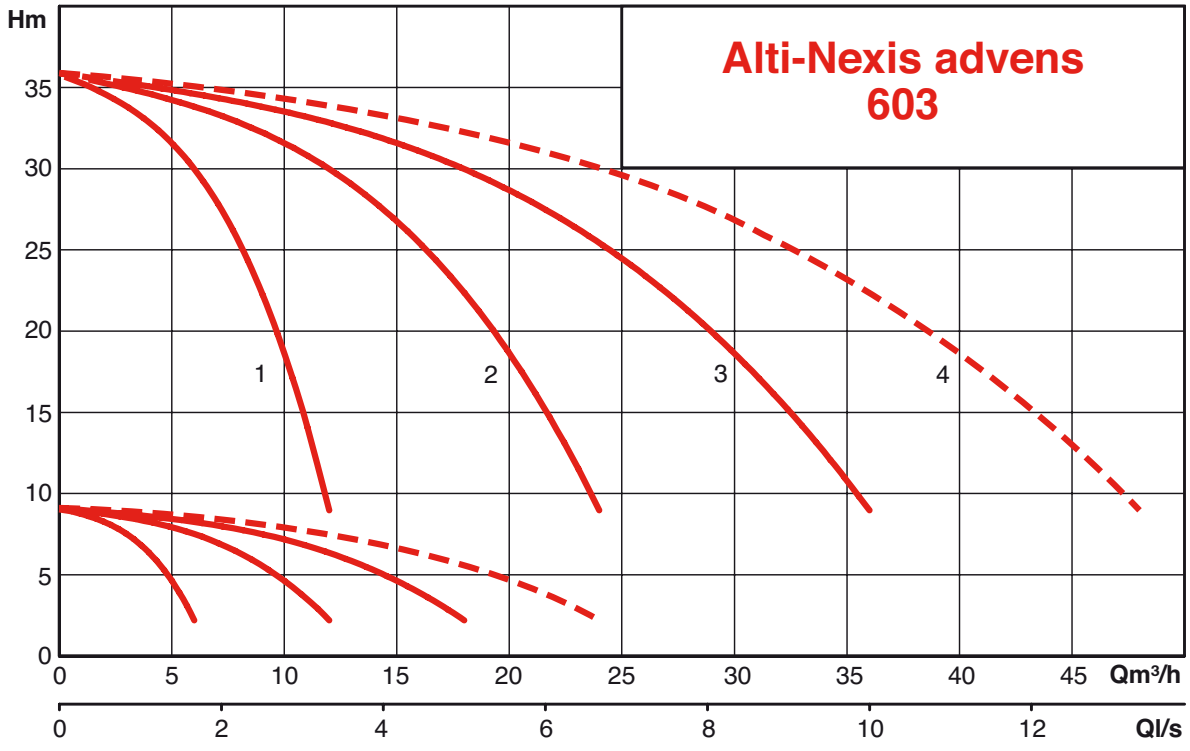

HYDRAULIC PERFORMANCE - ALTI -NEXIS ADVENS - 600 SERIES

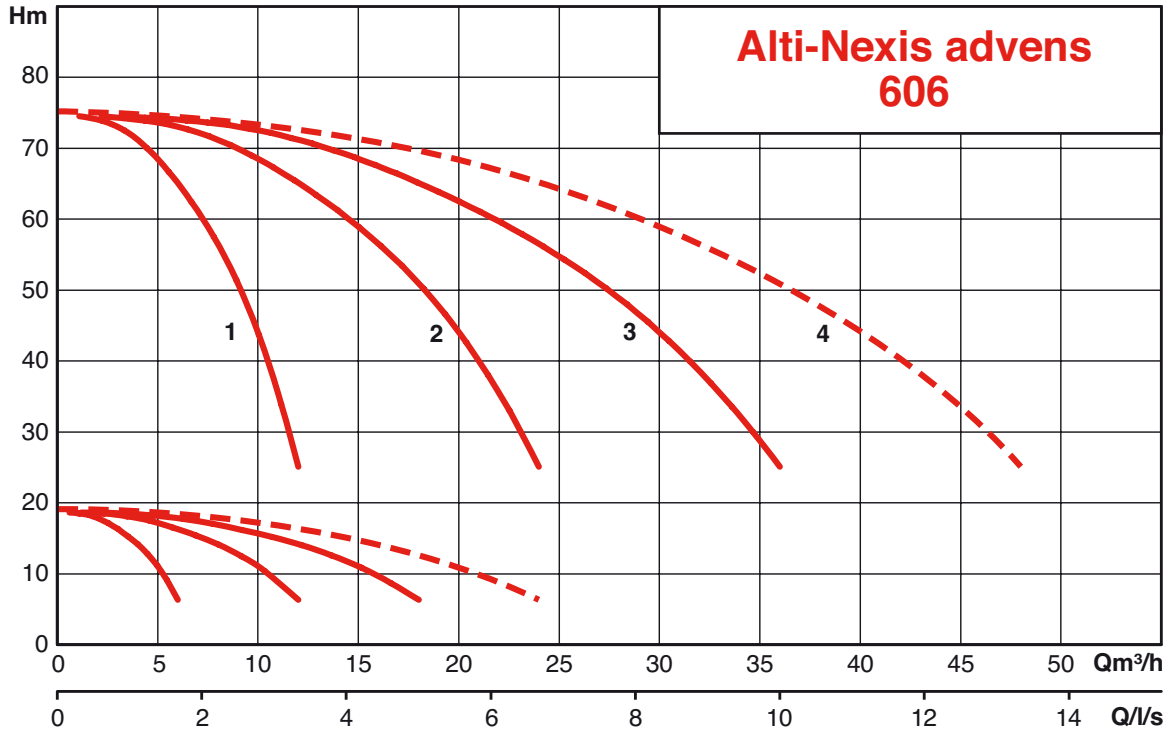

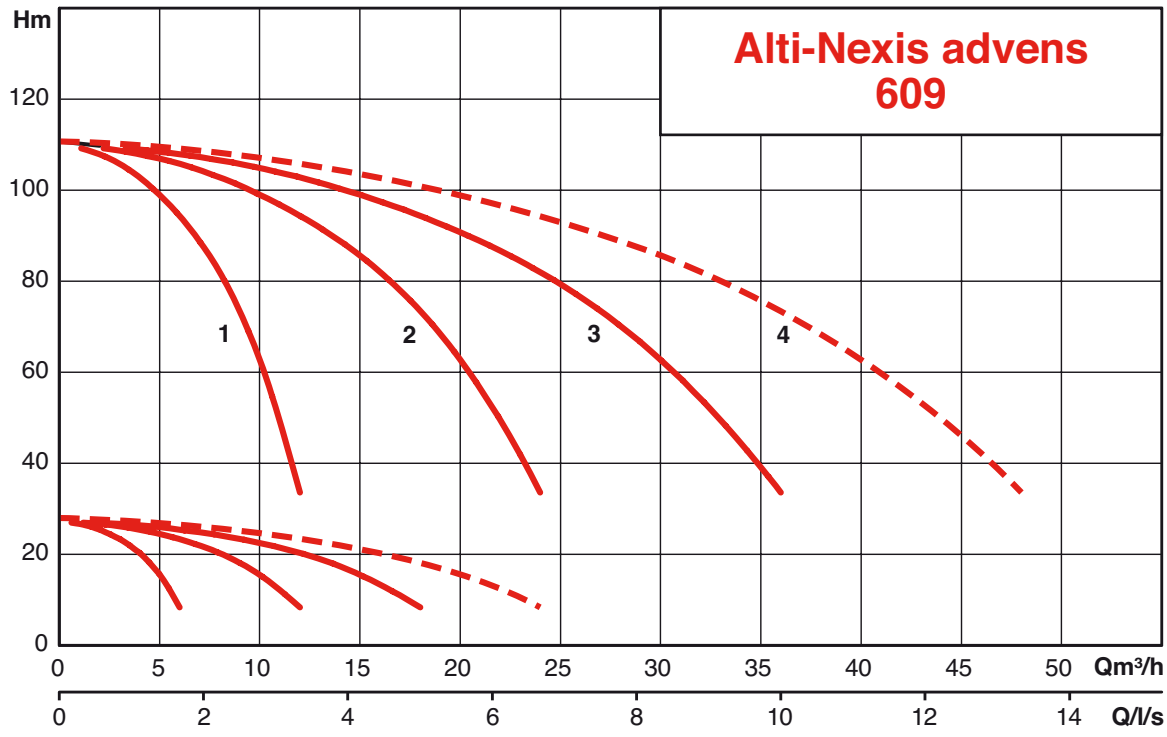

ALTI-NEXIS ADVENS

HYDRAULIC PERFORMANCE - ALTI -NEXIS ADVENS - 600 SERIES

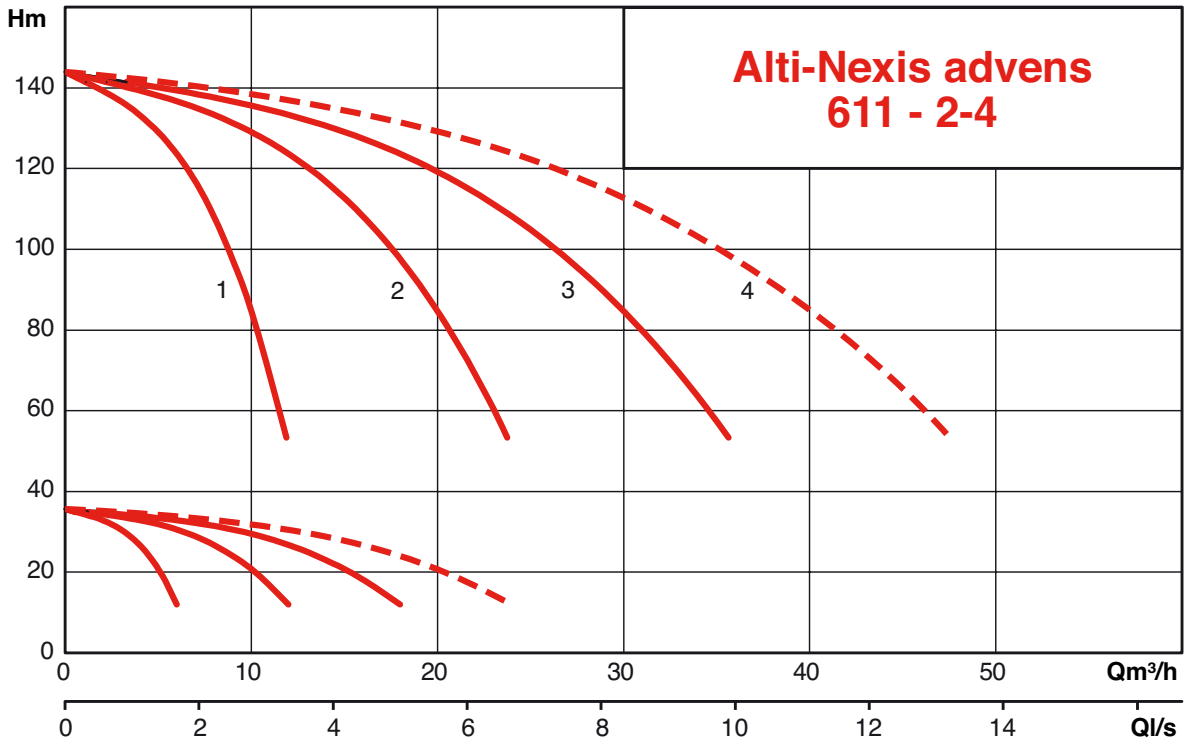

PERFORMANCES HYDRAULIQUES - ALTI-NEXIS ADVENS - SÉRIE 1000

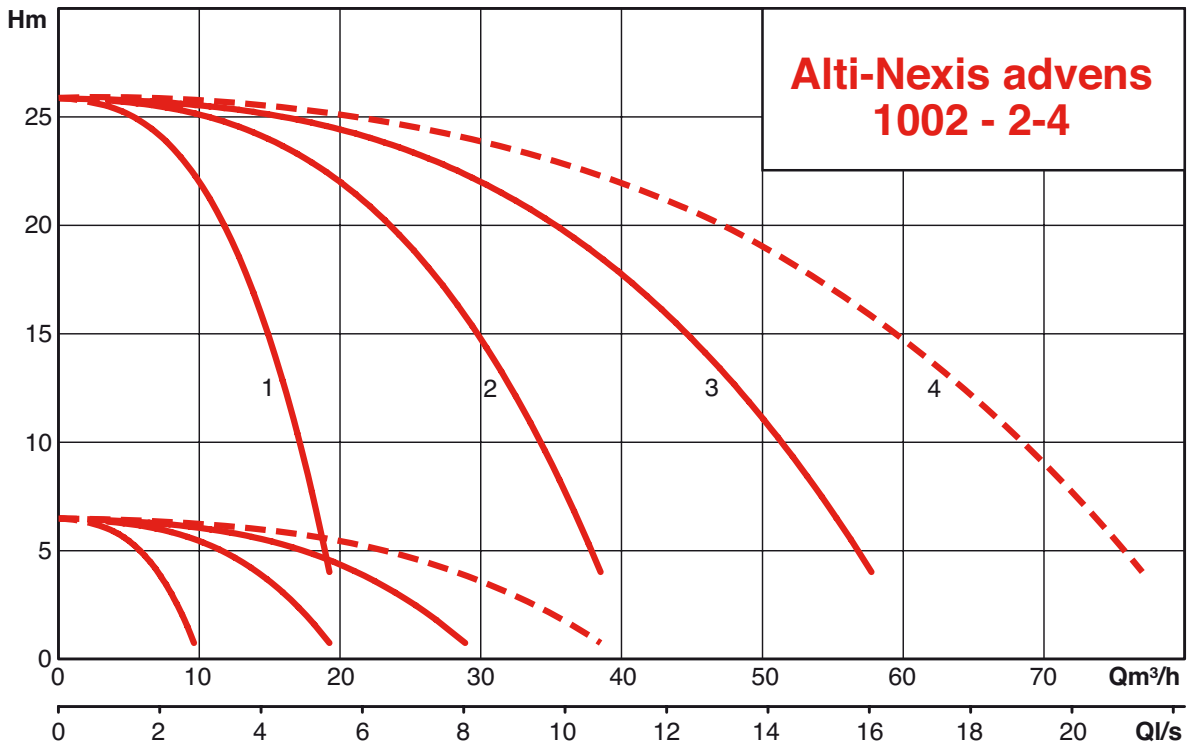

HYDRAULIC PERFORMANCE - ALTI -NEXIS ADVENS - 1000 SERIES

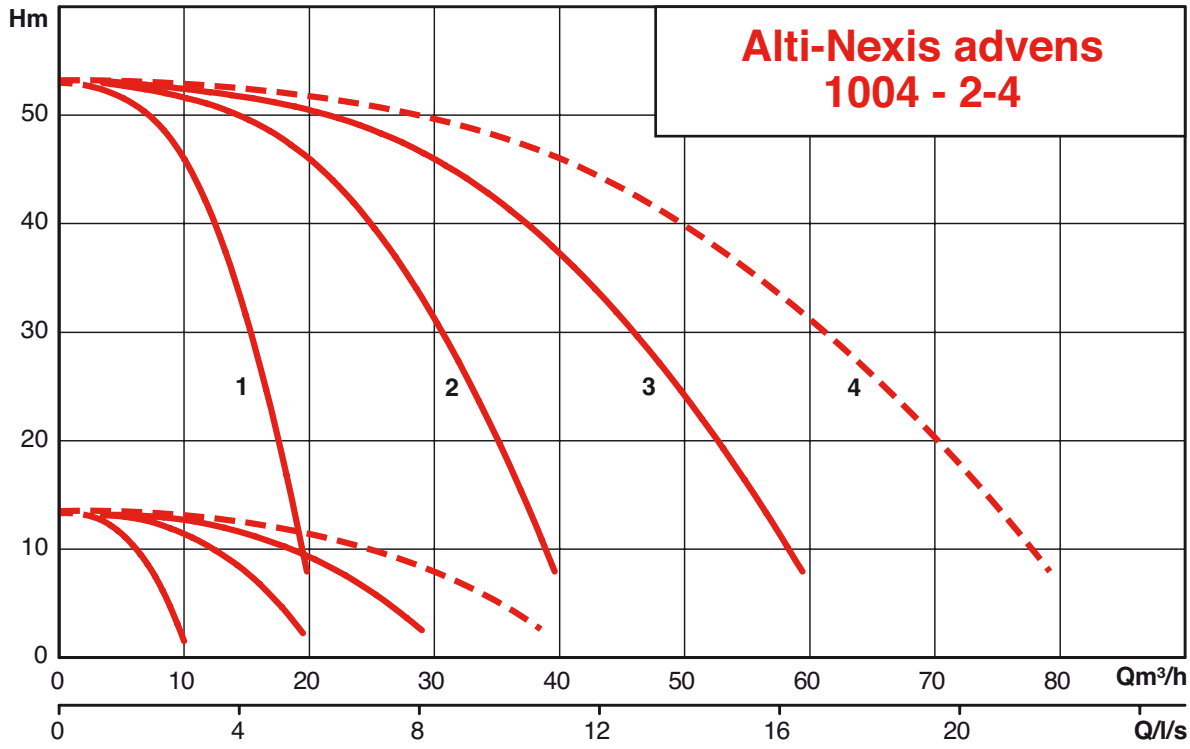

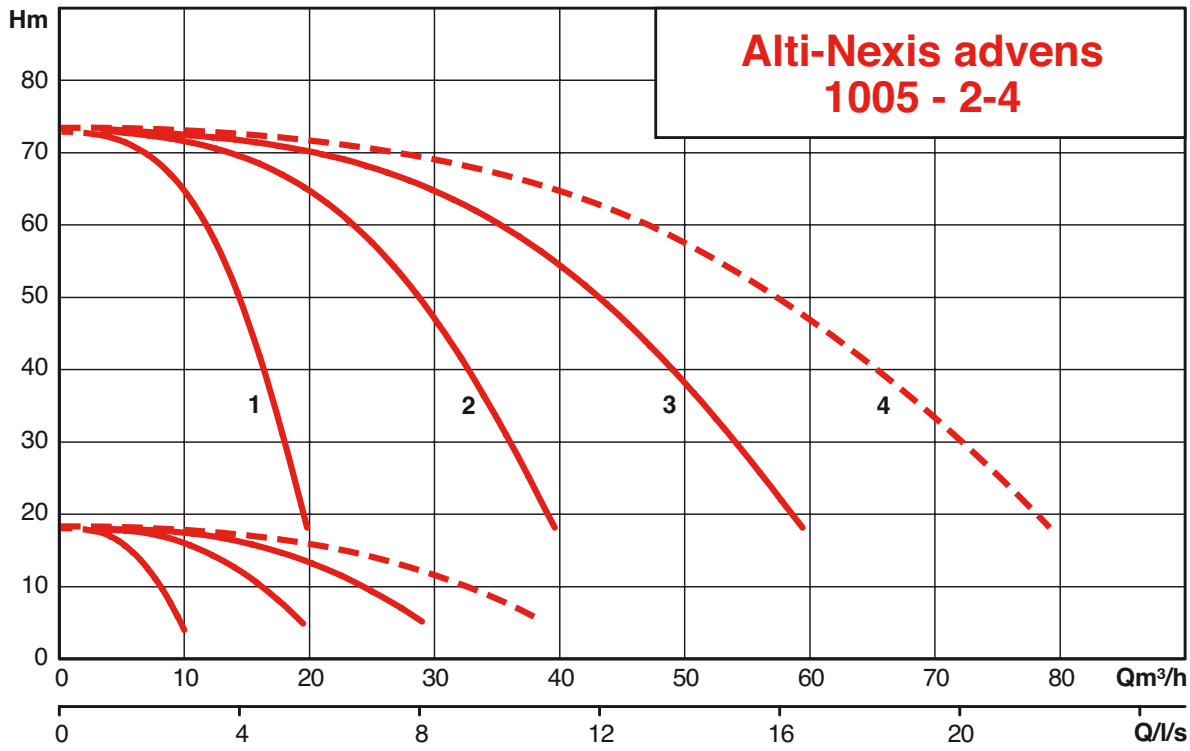

ALTI-NEXIS ADVENS

HYDRAULIC PERFORMANCE - ALTI -NEXIS ADVENS - 1000 SERIES

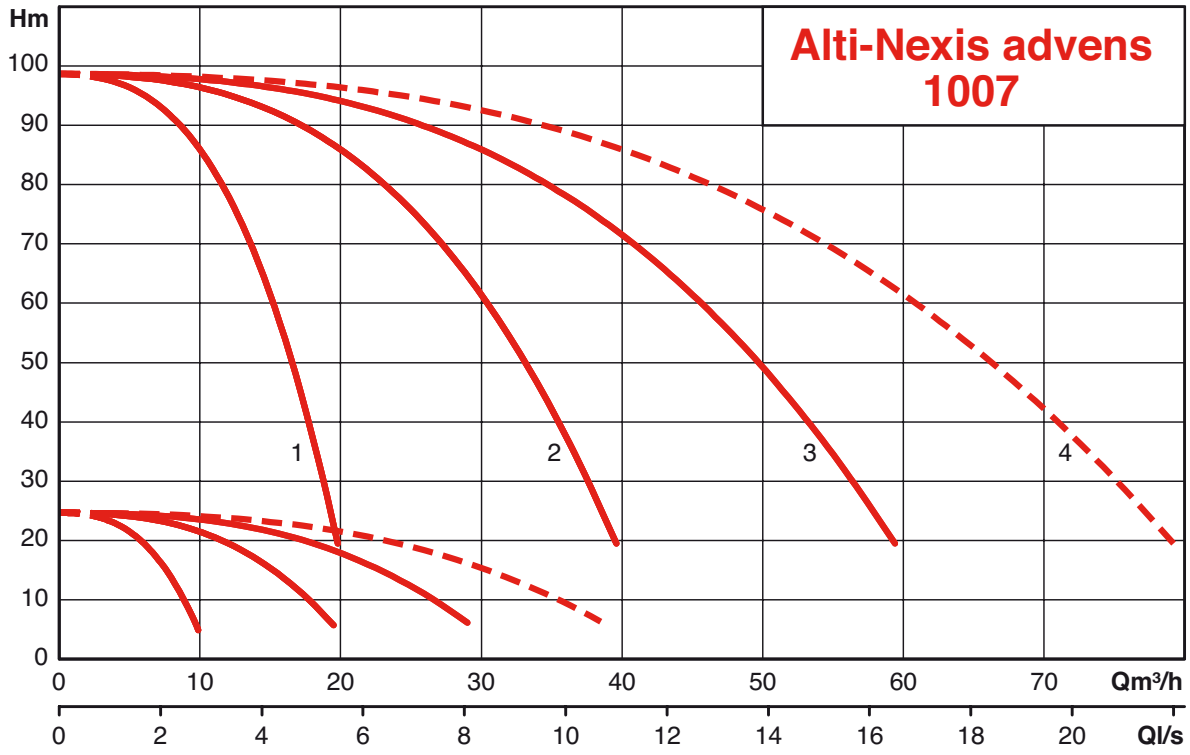

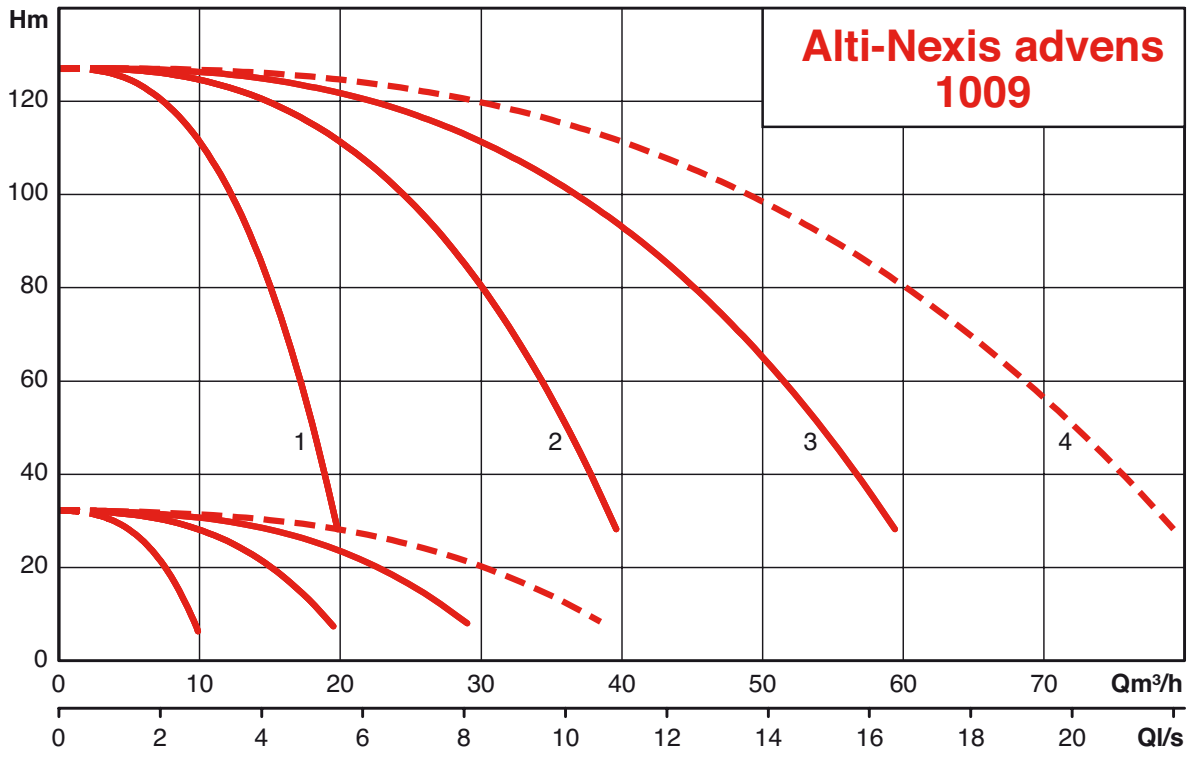

HYDRAULIC PERFORMANCE - ALTI -NEXIS ADVENS - 1000 SERIES

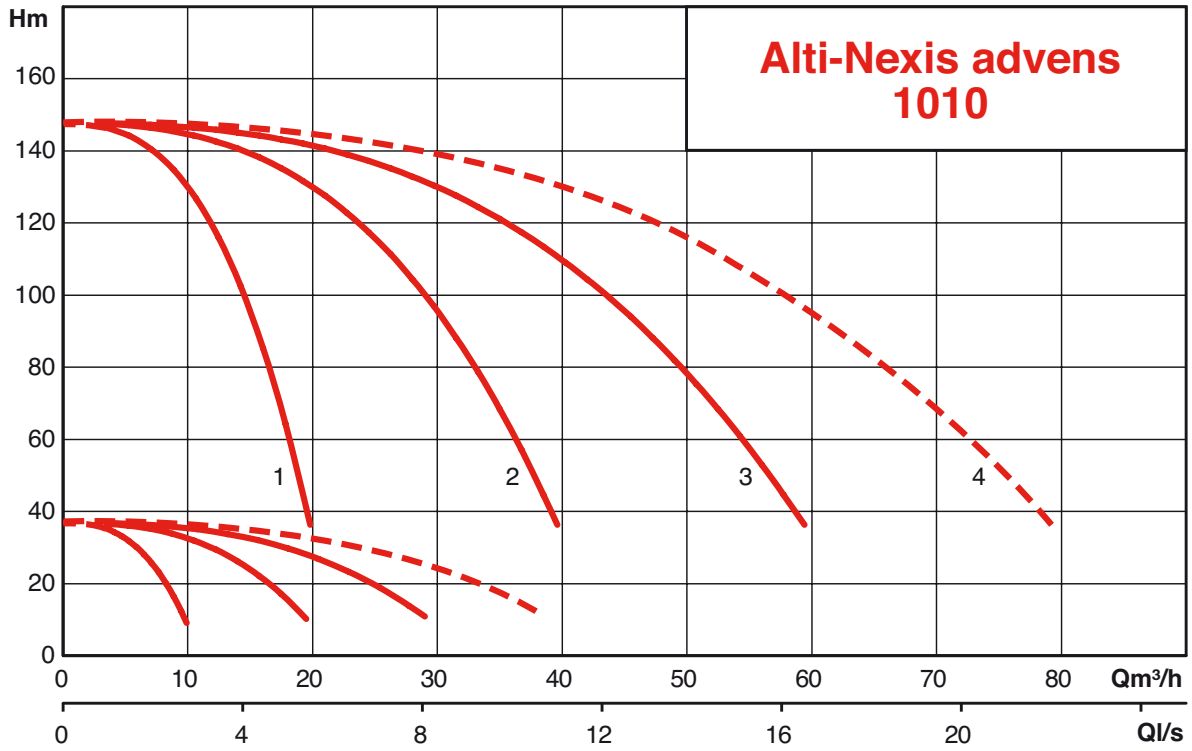

PERFORMANCES HYDRAULIQUES - ALTI-NEXIS ADVENS - SÉRIE 1600

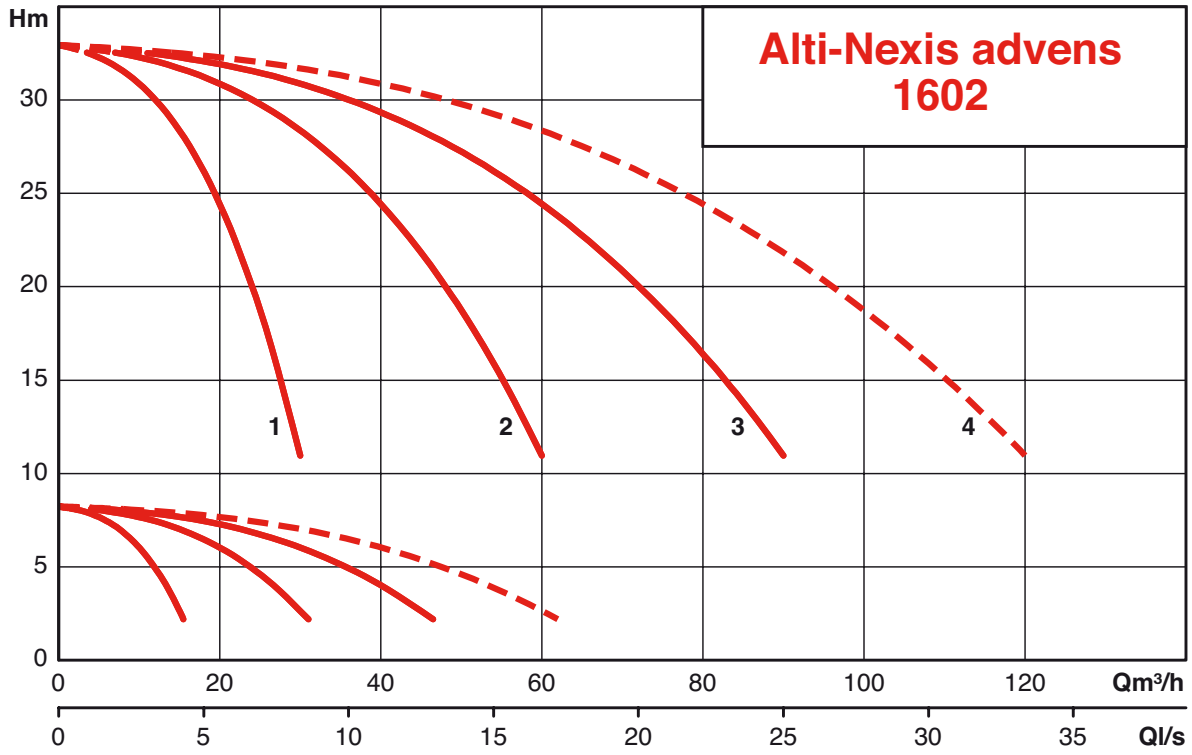

ALTI-NEXIS ADVENS

HYDRAULIC PERFORMANCE - ALTI -NEXIS ADVENS - 1600 SERIES

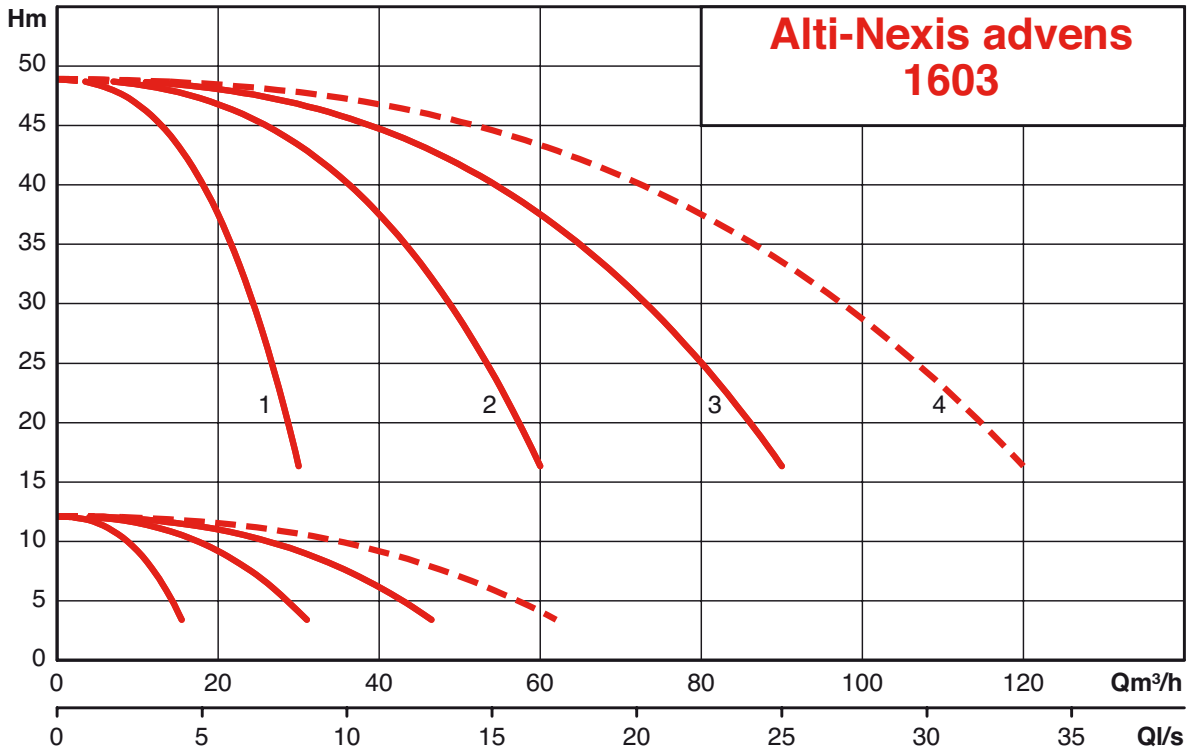

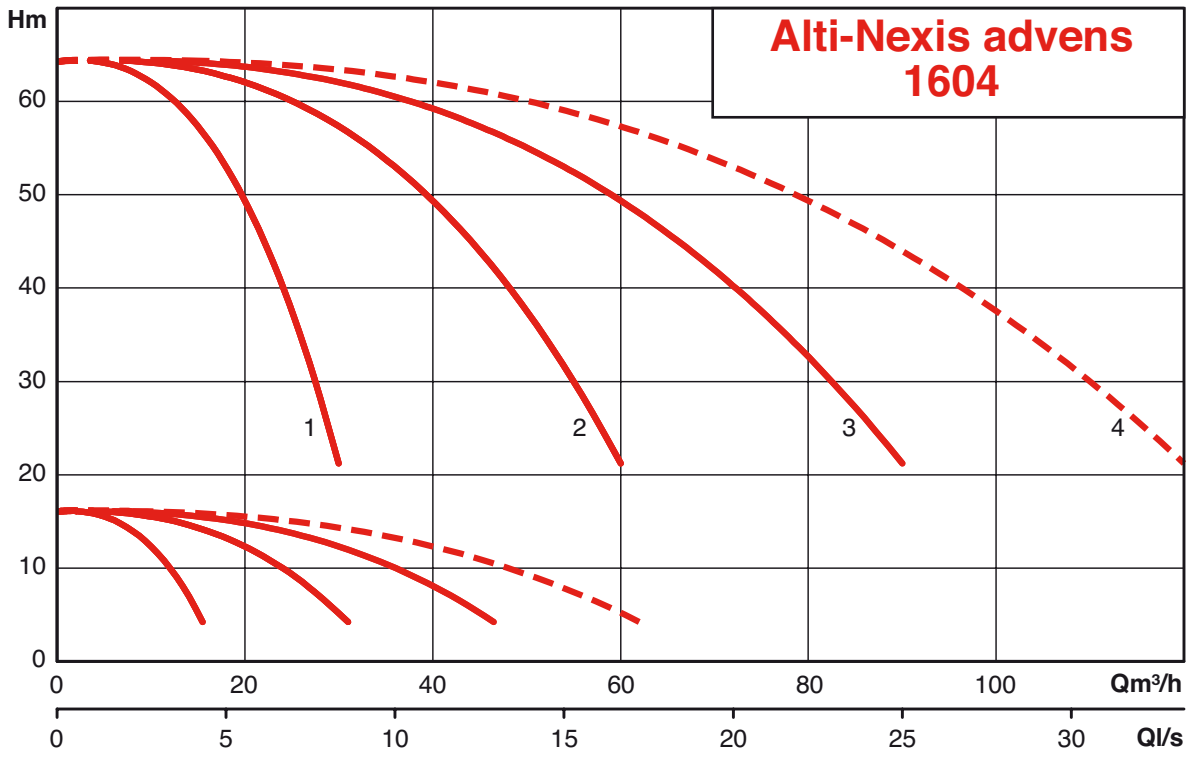

HYDRAULIC PERFORMANCE - ALTI -NEXIS ADVENS - 1600 SERIES

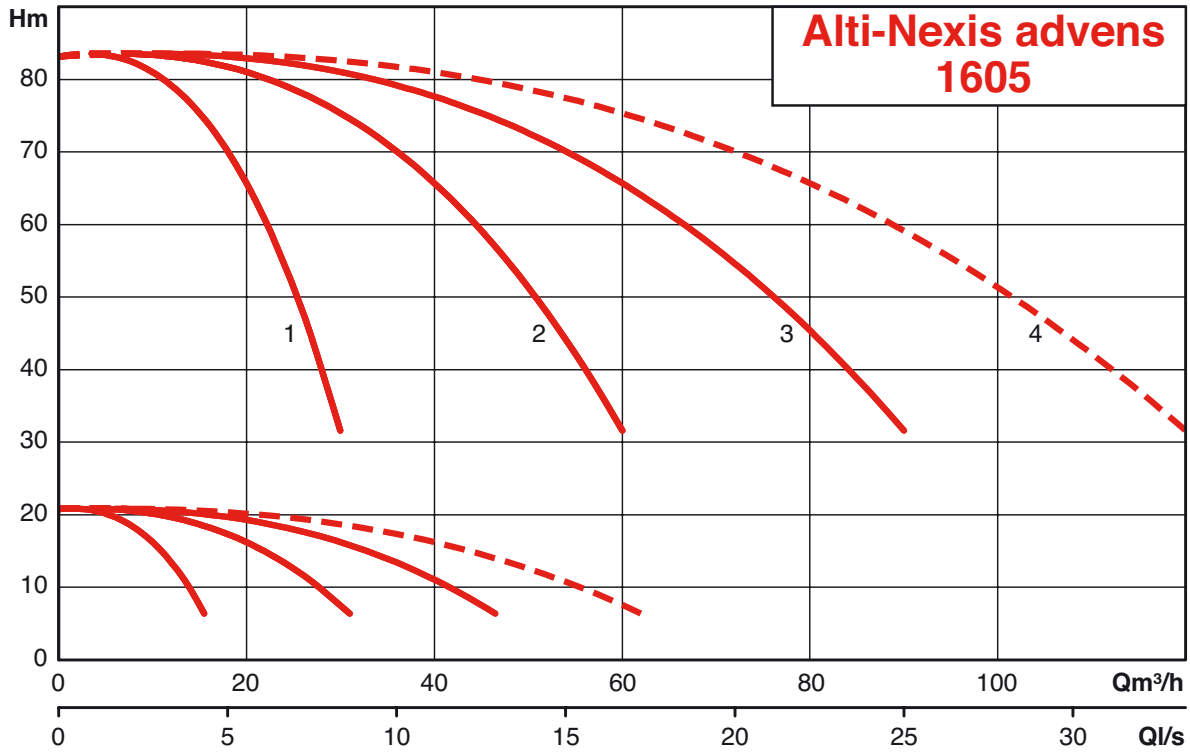

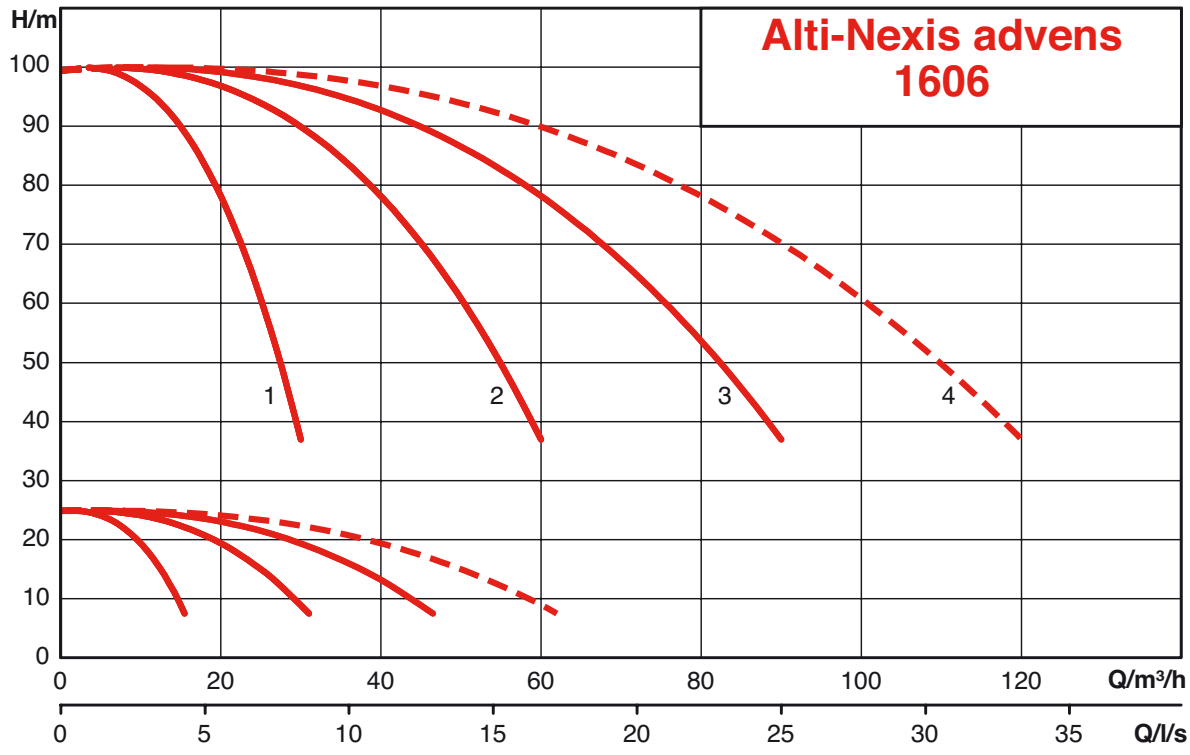

ALTI-NEXIS ADVENS

HYDRAULIC PERFORMANCE - ALTI -NEXIS ADVENS - 1600 SERIES

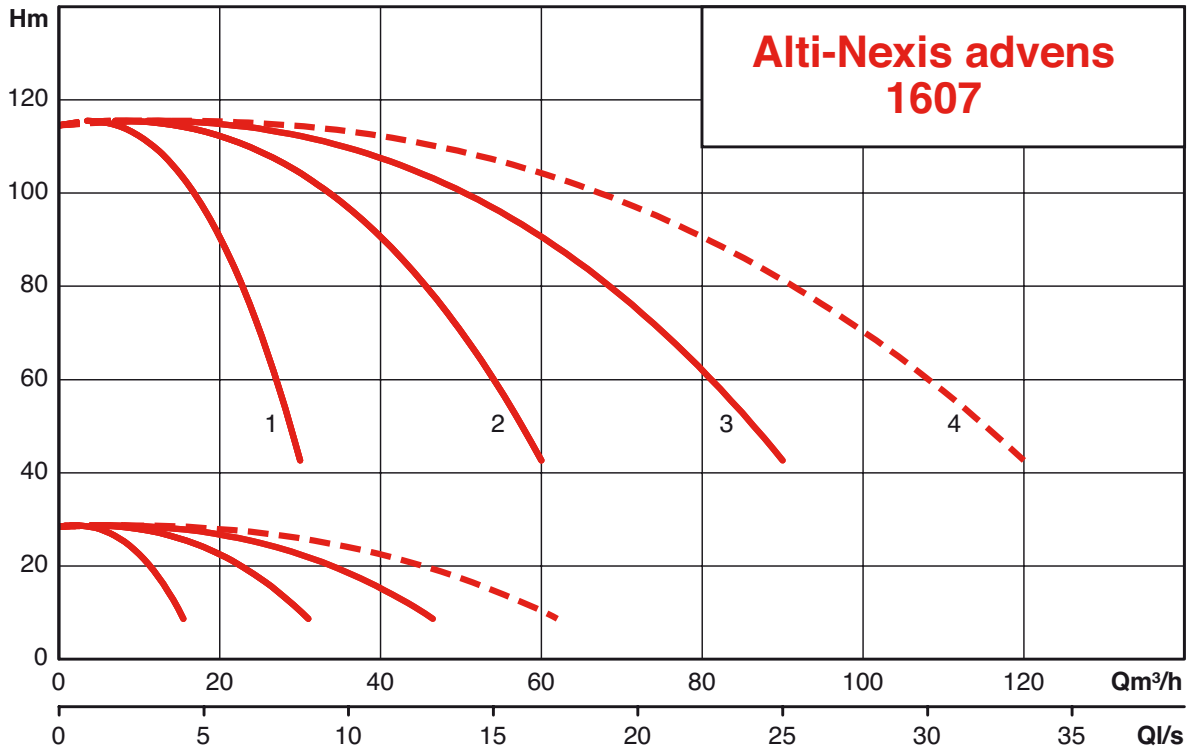

CHARACTERISTICS - ALTI-NEXIS ADVENS - SCE - 2 PUMPS

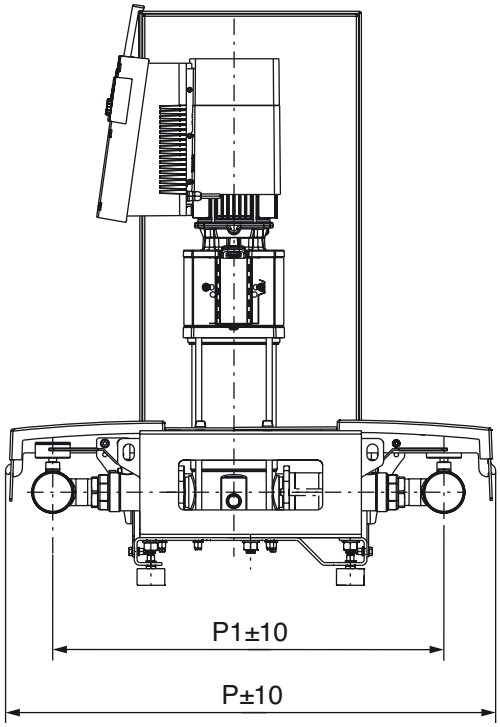

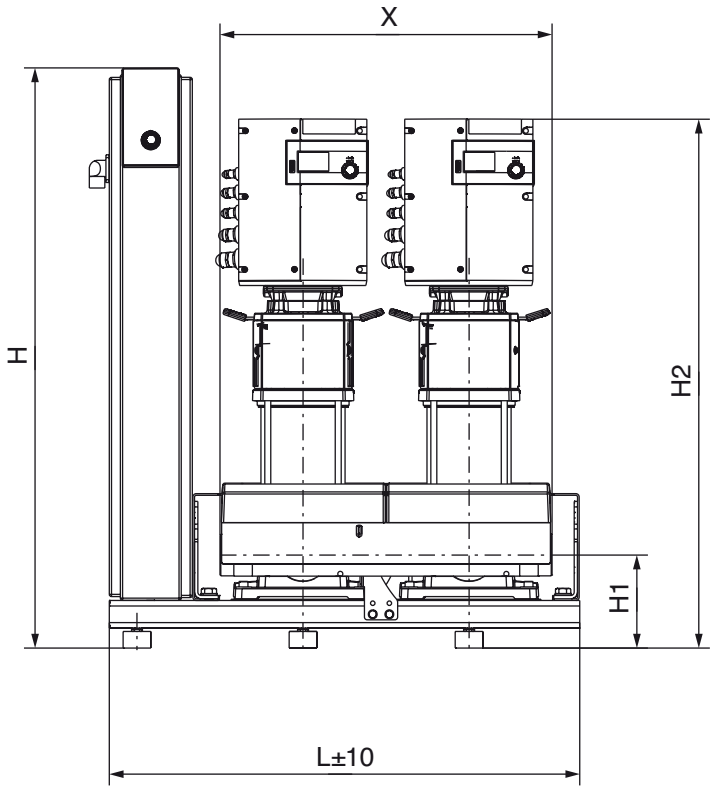

MODEL	DIMENSIONS								MOTOR			MASS	
	H	H1	H2	L	P	P1	X	Pipe	P2	I Max 400V 50Hz - 3 ~	PN	Nett weight (without packaging	Gross weight (with packaging
	± 10	± 5	± 10	± 10	± 10	± 10	± 10	mm		(A)	mm	Kg	Kg
ALTI-NEXIS-ADVENS405-2-SC-16-T4	1055	140	864	850	885	611	600	1"1/2	1,1	3,8	16	170	194
ALTI-NEXIS-ADVENS410-2-SC-16-T4	1055	140	999	850	885	611	600	1"1/2	2,2	9,6	16	179	204
ALTI-NEXIS-ADVENS414-2-SC-16-T4	1055	140	1099	850	885	611	600	1"1/2	3,2	12,8	16	189	214
ALTI-NEXIS-ADVENS603-2-SC-16-T4	1055	140	852	850	885	623	600	2"	1,1	3,8	16	151	176
ALTI-NEXIS-ADVENS606-2-SC-16-T4	1055	140	964	850	885	623	600	2"	2,2	9,6	16	180	205
ALTI-NEXIS-ADVENS609-2-SC-16-T4	1055	140	1087	850	885	623	600	2"	3,2	12,8	16	192	217
ALTI-NEXIS-ADVENS611-2-SC-16-T4	1055	140	1401	850	885	623	600	2"	4,2	14,4	16	212	271
ALTI-NEXIS-ADVENS1002-2-SC-16-T4	1055	170	835	850	885	704	600	2"1/2	1,1	3,8	16	181	256
ALTI-NEXIS-ADVENS1004-2-SC-16-T4	1055	170	920	850	885	704	600	2"1/2	2,2	9,6	16	182	257
ALTI-NEXIS-ADVENS1005-2-SC-16-T4	1055	170	958	850	885	704	600	2"1/2	3,2	12,8	16	186	261
ALTI-NEXIS-ADVENS1007-2-SC-16-T4	1055	170	1245	850	885	704	600	2"1/2	4,2	14,4	16	220	279
ALTI-NEXIS-ADVENS1009-2-SC-16-T4	1055	170	1320	850	885	704	600	2"1/2	5,5	18,6	16	236	295
ALTI-NEXIS-ADVENS1010-2-SC-16-T4	1055	170	1380	850	885	704	600	2"1/2	6,5	21,8	16	265	324
ALTI-NEXIS-ADVENS1602-2-SC-16-T4	1055	180	880	850	885	735	600	3"	2,2	9,6	16	186	261
ALTI-NEXIS-ADVENS1603-2-SC-16-T4	1055	180	930	850	885	735	600	3"	3,2	12,8	16	192	269
ALTI-NEXIS-ADVENS1604-2-SC-16-T4	1055	180	1192	850	885	735	600	3"	4,2	14,4	16	221	280
ALTI-NEXIS-ADVENS1605-2-SC-16-T4	1055	180	1242	850	885	735	600	3"	5,5	18,6	16	237	296
ALTI-NEXIS-ADVENS1606-2-SC-16-T4	1055	180	1315	850	885	735	600	3"	6,5	21,8	16	267	326
ALTI-NEXIS-ADVENS1607-2-SC-16-T4	1055	180	1365	850	885	735	600	3"	7,5	25	16	269	328

ALTI-NEXIS ADVENS

CHARACTERISTICS - ALTI-NEXIS ADVENS - SCE - 4 PUMPS

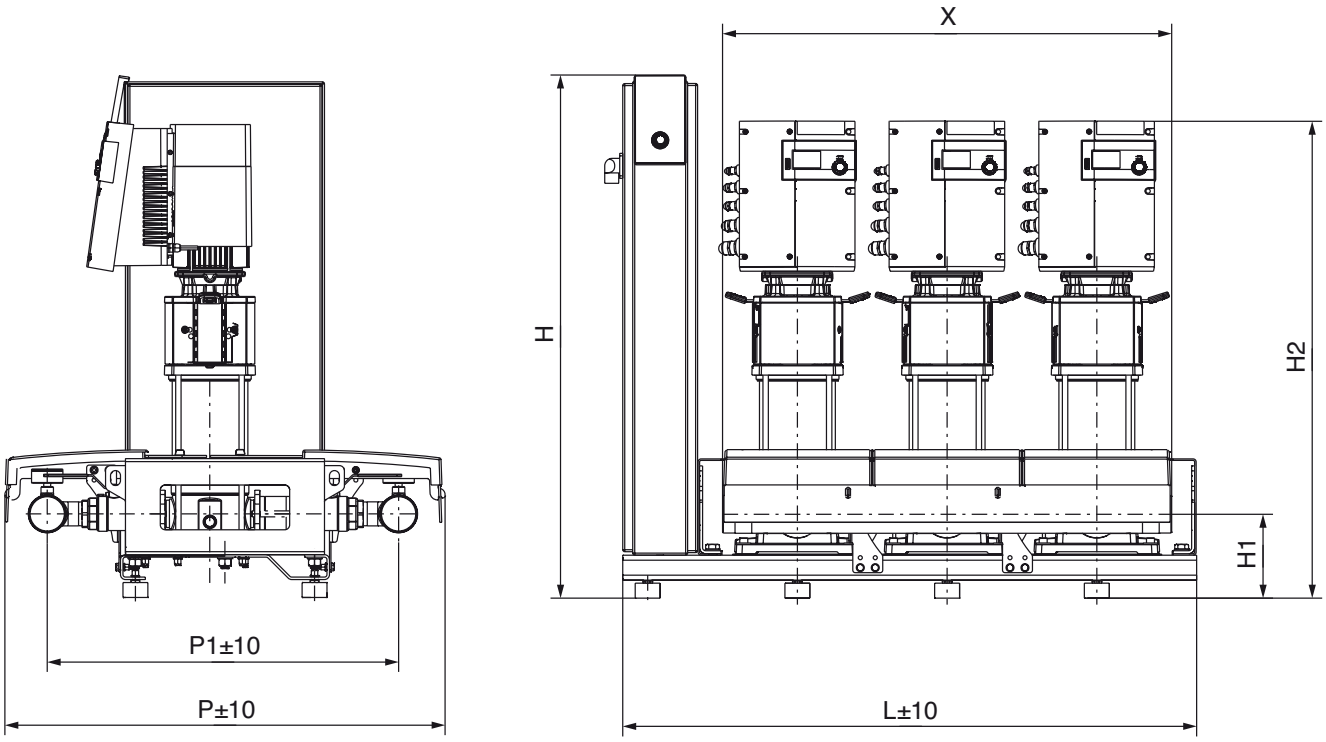

MODEL	DIMENSIONS								MOTOR			MASS	
	H	H1	H2	L	P	P1	X	Pipe	P2	I Max 400V 50Hz - 3 ~	PN	Nett weight (without packaging)	Gross weight (with packaging)
	± 10	± 5	± 10	± 10	± 10	± 10	± 10	mm		(A)	mm	Kg	Kg
ALTI-NEXIS-ADVENS405-3-SC-16-T4	1055	140	864	1150	885	623	900	2"	1,1	5,7	16	231	256
ALTI-NEXIS-ADVENS410-3-SC-16-T4	1055	140	999	1150	885	623	900	2"	2,2	14,4	16	245	270
ALTI-NEXIS-ADVENS414-3-SC-16-T4	1055	140	1099	1150	885	623	900	2"	3,2	19,1	16	260	285
ALTI-NEXIS-ADVENS603-3-SC-16-T4	1055	140	852	1150	885	637	900	2"1/2	1,1	5,7	16	203	228
ALTI-NEXIS-ADVENS606-3-SC-16-T4	1055	140	964	1150	885	637	900	2"1/2	2,2	14,4	16	246	271
ALTI-NEXIS-ADVENS609-3-SC-16-T4	1055	140	1087	1150	885	637	900	2"1/2	3,2	19,1	16	264	289
ALTI-NEXIS-ADVENS611-3-SC-16-T4	1055	140	1401	1150	885	637	900	2"1/2	4,2	21,6	16	295	369
ALTI-NEXIS-ADVENS1002-3-SC-16-T4	1055	170	835	1150	885	704	900	2"1/2	1,1	5,7	16	280	363
ALTI-NEXIS-ADVENS1004-3-SC-16-T4	1055	170	920	1150	885	704	900	2"1/2	2,2	14,4	16	282	365
ALTI-NEXIS-ADVENS1005-3-SC-16-T4	1055	170	958	1150	885	704	900	2"1/2	3,2	19,1	16	285	368
ALTI-NEXIS-ADVENS1007-3-SC-16-T4	1055	170	1245	1150	885	704	900	2"1/2	4,2	21,6	16	305	379
ALTI-NEXIS-ADVENS1009-3-SC-16-T4	1055	170	1320	1150	885	704	900	2"1/2	5,5	27,9	16	329	403
ALTI-NEXIS-ADVENS1010-3-SC-16-T4	1055	170	1380	1150	885	704	900	2"1/2	6,5	32,7	16	372	446
ALTI-NEXIS-ADVENS1602-3-SC-16-T4	1055	180	880	1150	986	766	1000	DN100	2,2	14,4	16	280	354
ALTI-NEXIS-ADVENS1603-3-SC-16-T4	1055	180	930	1150	986	766	1000	DN100	3,2	19,1	16	284	358
ALTI-NEXIS-ADVENS1604-3-SC-16-T4	1055	180	1192	1150	986	766	1000	DN100	4,2	21,6	16	322	396
ALTI-NEXIS-ADVENS1605-3-SC-16-T4	1055	180	1242	1150	986	766	1000	DN100	5,5	27,9	16	346	420
ALTI-NEXIS-ADVENS1606-3-SC-16-T4	1055	180	1315	1150	986	766	1000	DN100	6,5	32,7	16	391	465
ALTI-NEXIS-ADVENS1607-3-SC-16-T4	1055	180	1365	1150	986	766	1000	DN100	7,5	37,5	16	394	468

CHARACTERISTICS - ALTI-NEXIS ADVENS - SCE - 4 PUMPS

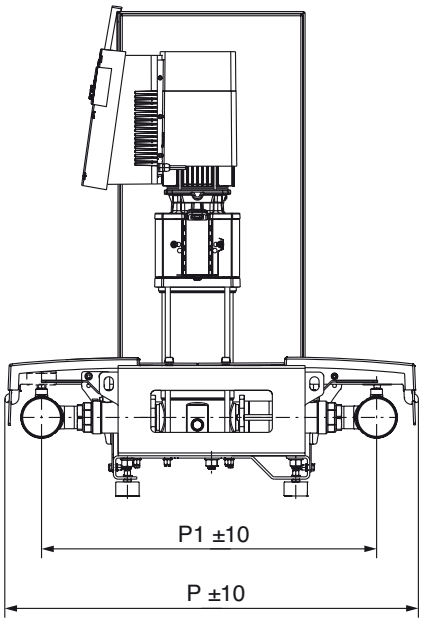

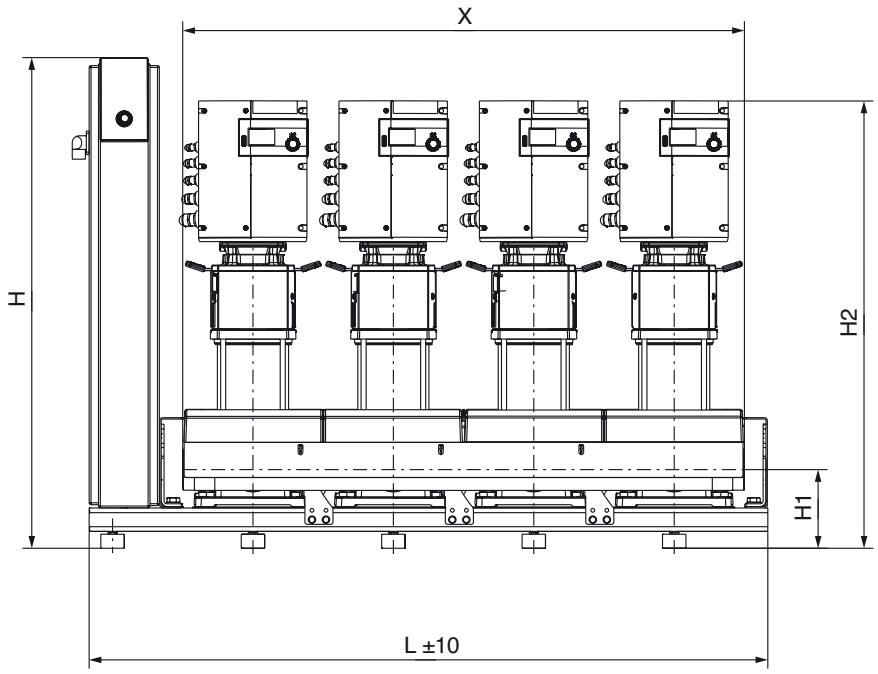

MODEL	DIMENSIONS								MOTOR			MASS	
	H	H1	H2	L	P	P1	X	Pipe	P2	I Max 400V 50Hz - 3 ~	PN	Nett weight (without packaging)	Gross weight (with packaging)
	± 10	± 5	± 10	± 10	± 10	± 10	± 10	mm		(A)	mm	Kg	Kg
ALTI-NEXIS-ADVENS405-4-SC-16-T4	1055	140	864	1450	885	637	1200	2"1/2	1,1	7,6	16	292	317
ALTI-NEXIS-ADVENS410-4-SC-16-T4	1055	140	999	1450	885	637	1200	2"1/2	2,2	19,2	16	311	336
ALTI-NEXIS-ADVENS414-4-SC-16-T4	1055	140	1099	1450	885	637	1200	2"1/2	3,2	25,6	16	331	356
ALTI-NEXIS-ADVENS603-4-SC-16-T4	1055	140	852	1450	885	637	1200	2"1/2	1,1	7,6	16	253	278
ALTI-NEXIS-ADVENS606-4-SC-16-T4	1055	140	964	1450	885	637	1200	2"1/2	2,2	19,2	16	311	336
ALTI-NEXIS-ADVENS609-4-SC-16-T4	1055	140	1087	1450	885	637	1200	2"1/2	3,2	25,6	16	335	360
ALTI-NEXIS-ADVENS611-4-SC-16-T4	1055	140	1401	1450	885	637	1200	2"1/2	4,2	28,8	16	376	471
ALTI-NEXIS-ADVENS1002-4-SC-16-T4	1055	170	835	1450	885	717	1200	3"	1,1	7,6	16	342	485
ALTI-NEXIS-ADVENS1004-4-SC-16-T4	1055	170	920	1450	885	717	1200	3"	2,2	19,2	16	345	487
ALTI-NEXIS-ADVENS1005-4-SC-16-T4	1055	170	958	1450	885	717	1200	3"	3,2	25,6	16	357	500
ALTI-NEXIS-ADVENS1007-4-SC-16-T4	1055	170	1245	1450	885	717	1200	3"	4,2	28,8	16	392	487
ALTI-NEXIS-ADVENS1009-4-SC-16-T4	1055	170	1320	1450	885	717	1200	3"	5,5	37,2	16	424	519
ALTI-NEXIS-ADVENS1010-4-SC-16-T4	1055	170	1380	1450	885	717	1200	3"	6,5	43,6	16	481	576
ALTI-NEXIS-ADVENS1602-4-SC-16-T4	1055	180	880	1450	986	766	1300	DN100	2,2	19,2	16	351	446
ALTI-NEXIS-ADVENS1603-4-SC-16-T4	1055	180	930	1450	986	766	1300	DN100	3,2	25,6	16	356	451
ALTI-NEXIS-ADVENS1604-4-SC-16-T4	1055	180	1192	1450	986	766	1300	DN100	4,2	28,8	16	407	502
ALTI-NEXIS-ADVENS1605-4-SC-16-T4	1055	180	1242	1450	986	766	1300	DN100	5,5	37,2	16	439	534
ALTI-NEXIS-ADVENS1606-4-SC-16-T4	1055	180	1315	1450	986	766	1300	DN100	6,5	43,6	16	500	595
ALTI-NEXIS-ADVENS1607-4-SC-16-T4	1055	180	1365	1450	986	766	1300	DN100	7,5	50	16	504	599

ALTI-NEXIS ADVENS

ACCESSORIES

- Water supply by-pass, for direct connection to the mains, please consult us.
- Anti-vibration sleeves
- Pressure regulators
- Shut-off valves
- Running dry protection kit (mains supply)
- Running dry protection kit (on reservoir)
- stainless steel back flange Kit (sold in pairs)
- Pipe plug kit stainless steel
- Pipe plug kit electro-galvanised steel
- Bladder tank from 8L to 500L



• Anti-vibration sleeves

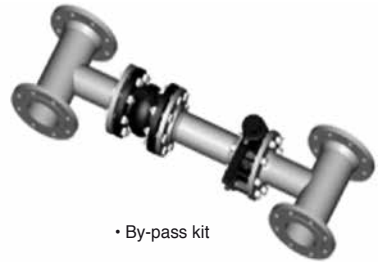

• By-pass kit



• Running dry protection kit (mains)



• Kit contre-brides



• Shut-off valve



• Pipe plug stainless steel



• Pressure regulators

PARTICULAR FEATURES

a) Installing

– On smooth ground, booster pump on anti-vibration buffers.
– Intake and output pipes can be connected either to left or right.
– Remote cabinet according to the power installed.
– One metre open space must be left around of the booster pump to carry out maintenance safely.

b) Delivery

On pallet.

RANGE OF APPLICATION

Flows up to:	80 m³/h
Manometric head up to:	230 m CE
Pression de service maxi :	10 - 16 bar optional 25 bar*
Maximum working pressure:	H/V 70°C VS 50°C
Ambient temperature:	40°C
Nominal diameter threaded pipes:	2" - 2"1/2 - 3"
Nominal diameter flanged pipes:	DN 100 to 150

* contact us

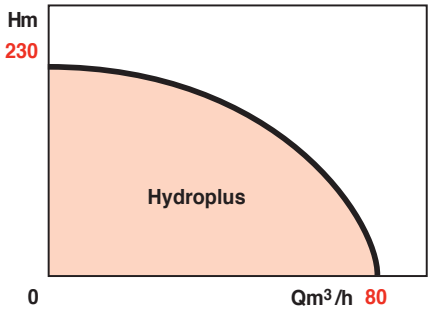

HYDROPLUS

BOOSTER PUMPS

Range of booster pumps fitted MULTi-V, MULTi-VS or MULTi-H pumps: Small institutions and industrial use 2 pole - 50 Hz

APPLICATIONS

Creating and maintaining the pressure level in water supply systems with low or nonexistent pressure for:
- housing complexes, offices,
- private homes,
- hotels, hospitals, clinics,
- shopping centres, shops,
- primary schools, secondary schools, universities, army barracks,
- industrial and agricultural buildings,
- irrigation, watering…

ADVANTAGES

- **Compact modules, preset at the factory and ready to install.**
- **Less floor space needed.**
- **Easy installation: 2 hydraulic connections and one electrical connection.**
- **Controls and protection brought together in the switch board with integral logic controller system.**
- **Non-return valve for the N-ALTi 2, 4, 8, 16 range fitted with interchangeable cartridges. Easy to maintain.**
- **Stainless steel hydraulics section with stainless steel pipes: protects against corrosion and gives longer life.**

• N-Alti H803-2-CE-16-T4



• N-Alti VS405-2-CE-16-T4



• **N-Alti VS... -** Wet running pump technology - Quiet-running booster pump at 38 to 58 dB(A)



• N-ALTi-V806-3-CCFC-16-T4



• N-ALTi-V806-3-CA-16-T4



HYDROPLUS

DESIGN

• Range Alti H, Alti V, Alti VS

Compact booster pumps, designed for direct or standard boosting systems fitted with:

- 2 or 3 MULTi-H or MULTi-V pumps, with pre-set hydraulic features.
- 2 intake-outlet pipes in 2, 4, 8, 16m3 stainless steel 316TI: choice of right-hand or left-hand connections.
- Valves at the outlet and intake of each pump.
- quiet-running non-return valve at the outlet of each pump fitted with interchangeable cartridges on the N–ALTi 2,4,8,16 range.
- Automatic control pressure switch for the pumps (CA-CE).
- Pressure transmitter (CCFC).
- Low water level pressure switch (mains water supply version).
- Low water level float switch (for storage tank version).
- Pressure gauge.
- Supporting and fixing (Silent blocs on ALTi-H version).
- Lifting rings or holes for lifting rods.
- Switch box with three settings:
  - CA : electromechanical with API (Programmable logic controller)
  - CE : electronic
  - CCFC : speed variation.

OPTION

- ELiNOX version-V/H: 316 grade stainless steel version.
- Booster pumps for 4 or more pumps, jockey pumps, ...

IDENTIFICATION

N-ALTi - V 405 N - 2 CC - V - 16 - T4 - FC

Version
N-ALTi: standard version
ELiNOX: all stainless steel version

Type of pump:
H: horizontal
V: vertical
VS: vertical wet runner pump

Nominal flow and number of adjustable speeds

IE2 Motor

Module's mode of operation:
2: 2 pumps in cascade
3: 3 pumps in cascade

Controls:
CE: Electronic controls
CA: Electromechanical switch box with API
CCFC: Electromechanical switch box with speed variation

Type of water supply:
V: Mains supply
B: System tank.

Maximum working pressure: 10 bar - 16 bar

Three-phase current:
T2: Three-phase 230 V
T4: Three-phase 400 V

Frequency converter



DESCRIPTION OF THE BOOSTER PUMP

• N-Alti H

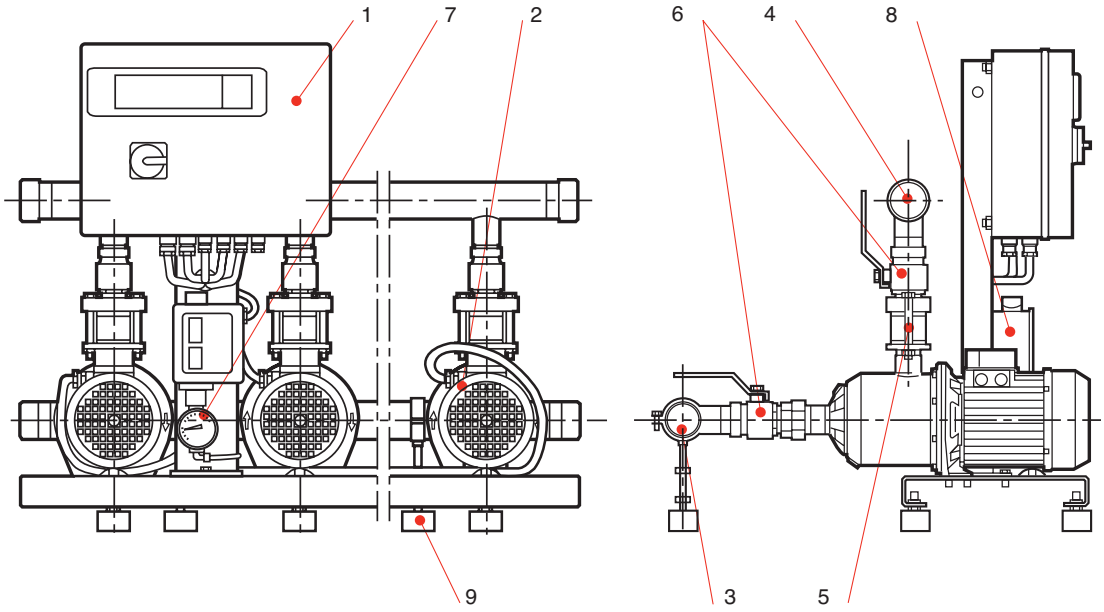

1 - Switch box
2 - Pumps (Multi H Type)
3 - Intake pipe
4 - Outlet pipe
5 - Non-return valve
6 - Isolating valves
7 - Pressure gauge
8 - Pressure control switch
9 - Vibration absorbing feet (for N-Alti H)

• N-Alti V / N-Alti-VS

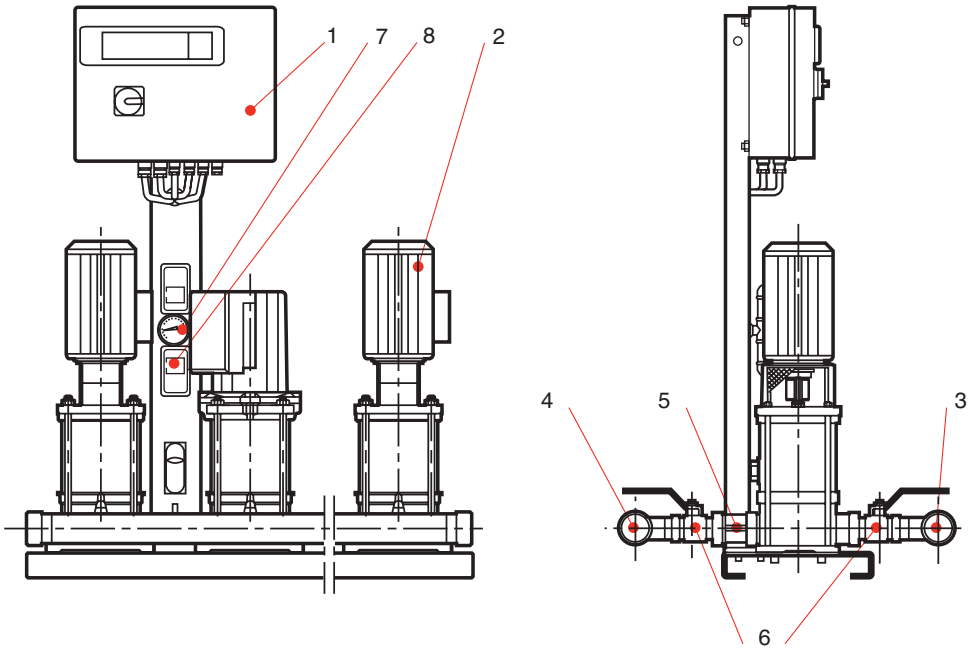

1 - Switch box
2 - Pumps (Type Multi V or Multi VS)
3 - Intake pipe
4 - Outlet pipe
5 - Non-return valve
6 - Isolating valves
7 - Pressure gauge
8 - Pressure control switch

HYDROPLUS

BASIC CONSTRUCTION

		N-Alti H		N-ALTi-V		N-Alti VS	
Components		2 pumps	3 pumps	2 pumps	3 pumps	2 pumps	3 pumps
Multi H Pumps		2	3	—	—	—	—
Multi V Pumps		—	—	2	3	—	—
Multi VS Pumps		—	—	—	—	2	3
Valves		4	6	4	6	4	6
Non-return valves		2	3	2	3	2	3
Stainless steel pipes		2	2	2	2	2	2
Pressure switch (CA,CE) - Transmitter (CCFC)		1	1	1	1	1	1
Protection	Pressure switch (for version V)	1	1	1	1	1	1
Low water level	Float (for version B)	1	1	1	1	1	1
Pressure gauge		1	1	1	1	1	1
Switch box		1	1	1	1	1	1
Vibration damping feet		4	4	—	—	—	—
Frame		1	1	1	1	1	1

STANDARDS AND SPECIFICATIONS

- Directive on Machinery 2006/42/CE.
- Electromagnetic Compatibility Directive 2004/108/CE.
- Low Voltage Directive 2006/95/CE
- IEC/CEI 60364 (NFC 15-100) (Electrical Installations).
- Certificate of Sanitary Conformity ACS.
- EN 809-Pumps and pump units for liquids.
- EN 61000-6-1 and EN 61000-6-3 or EN 61000-6-2 and EN 61000-6-4 (Immunity / Emissions).
- EN 60204-1 (Electrical Safety of Machinery), EN 12100 (Mechanical Safety of Machinery), EN 60439-1 (Electrical and electronic switch boxes).

SUPPLIES

• **Example with 3-pump Hydroplus. Same representation with a 2-pump Hydroplus.**

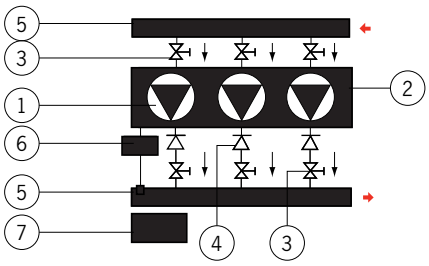

STANDARD SUPPLIES (1 to 9) :

1 - Two or three multistage pumps.
2 - Frame support.
3 - Isolating valves at the pump intake and outlet.
4 - Non-return valves at the pump outlet.
5 - Intake-outlet pipes.
6 - Pump control pressure switch.
7 - Control and protection switch board.

• **VERSION "V" From the public water system**

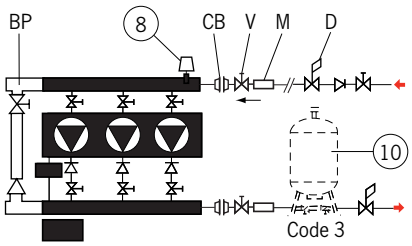

COMPULSORY SUPPLIES:

(according to the booster's water supply).

8 - Protective pressure switch against low water levels, delivered mounted, booster pump fed from the mains water supply (included in the price). or
9 - Float switch, delivered un mounted, booster pump fed from tank under pressure (included in the price).
10 - 100 to 2000 litre bladder tank, state max. operating pressure and capacity (optional for an extra charge).
11 - Balance pipe for intake tank

Note: If a by-pass and a pressure reducing valve at the intake are installed on the booster pump, you are recommended to install the pressure reducing valve between the by-pass and the booster pump.

• **VERSION "B" From a storage tank (in charge)**

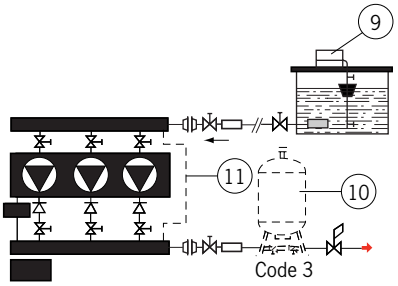

OPTIONAL SUPPLIES:

(options priced separately).

BP - Direct water supply by-pass, when the mains supply pressure is adequate (delivered installed on request).
M - Vibration damping rubber sleeves (supplied in pairs).
CB - Back flanges to be screwed or to be soldered on pipes (supplied in pairs).
D - Pressure reducing valve-pressure regulator on intake and/or outlet.
V - Isolating valves.

OPERATING LIMITS

• **N-Alti H 2,4,8,16**

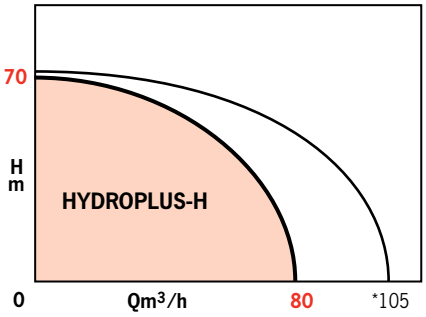

Flows up to: 3 pumps version	**80 m³/h**
4 pumps version	***105 m³/h**
Max height:	**70m (PN10)**
Maximum working pressure:	**10 bar**
Max entry pressure :	**4 bar**
Maximum water temperature:	**ALTi-H 70°C**
Ambient temperature:	**40°C**
Nominal diameter threaded pipes:	**G3, G2, G2$^{1/2}$**
Nominal diameter flanged pipes:	**DN 100**

• **N-Alti VS 2,4,8**

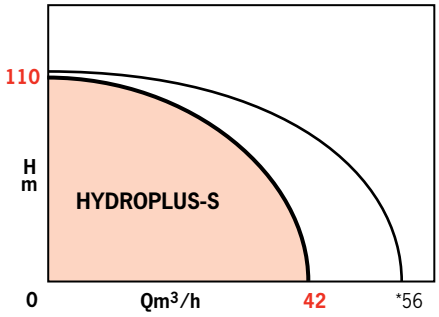

Flows up to: 3 pumps version	**42 m³/h**
4 pumps version	***56 m³/h**
Max height:	**110m (PN16)**
Maximum working pressure:	**16 bar**
Max entry pressure:	**6 bar**
Maximum water temperature:	**ALTi-VS 50°C**
Ambient temperature:	**40°C**
Nominal diameter threaded pipes:	**G3, G2, G2$^{1/2}$**

Note: A ALTI-VS must be installed on the mains supply or under pressure on a tank with a water height >0.5m above the pump.

• **N-ALTi-V 2,4,8**

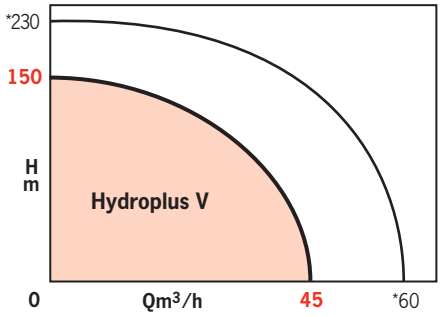

Flows up to: 3 pumps version	**45 m³/h**
4 pumps version	***60 m³/h**
Max height:	**150m (PN16)**
	****230m (PN25)**
Maximum working pressure:	**25 bar**
Max entry pressure:	**10 bar**
Maximum water temperature:	**ALTi-V 70°C**
Ambient temperature:	**40°C**
Nominal diameter threaded pipes:	**G2, G2$^{1/2}$, G3**
Nominal diameter flanged pipes:	**DN100 à 150**

HYDROPLUS

CONTROLS AND SETTINGS

Control panel



1 - Knob for each pump:
automatic I stop I momentary) over-ride operation.
2 - Indicator: pump-on indicator.
3 - Indicator: pump fault indicator.
4 - Indicator: low water level.
5 - Indicator: module on.
6 - Type of booster pump.

Details of speed variation



Viewing and settings touch screen

SWITCH BOXES

ELECTROMECHANICAL SWITCH BOX with api (ca) :

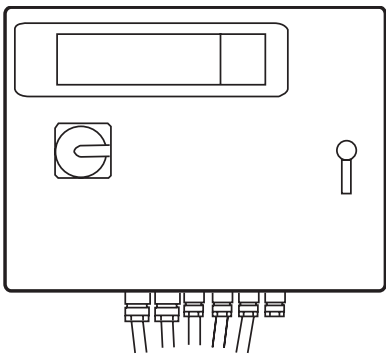

Water-tightness: IP 54
Three-phase supply: 230/400V (50 Hz)
220 /380 V (60 Hz option)
Single phase (option): 230 V (50 Hz)
220/240 V (60 Hz)

DESCRIPTION: (2 or 3 pumps).

On the front :

- Control and viewing panel.
- Isolating knob for safety and to turn on power.

Inside :

- Magneto-thermal circuit breakers with slider for adjusting current strength to the motor (and reset button) for pump(s).
- Pump contacts with connection terminals to the motor.
- Safety isolating switch for external controls with lockable handle.
- 24-230 V safety transformer.
- Protective fuses on the power supply to the controls.
- Terminal block for external controls (pressure switch, float switch, remote controls...)..
- Programmable logic controller.

OPERATION

The booster pump is operated by a deadband pressure switch (low and high pressure).
When low pressure is detected, a preliminary delay time “T1M” is cut-in. If “T1M” is exceeded and the pressure remains low, pump ”P1” with a new delay time “T2M”. If “T2M” is exceeded, pump ”P2” is cut-in with a new delay time “T3M” in version 3 pumps. If “T3M” is exceeded, pump “P3” is cut-in.

If the flow is adequate (between low and high pressure), the pump or the following pumps are not started.
When high pressure is reached, delay times “T1A”, “T2A”,,T3A” are cut-in to stop the pumps in the same way as they were started.

If the flow is adequate, the pumps in service are not stopped.
When the last pump is stopped, a cyclical changeover takes place when the pumps start again.
If a low water level is detected, a delay time “TME-ON” is cut-in and will stop the pumps after this time has elapsed. The pumps will only restart when the water flows in and a second delay time “TME-OFF” has elapsed.

If there is a fault on one of the pumps, the remaining working pumps are started pumps.

Note:
On all booster pump models (2 and 3 pump) the starting order of the pumps after each stop is changed.

SWITCH BOXES

ELECTRONIC SWITCH BOX

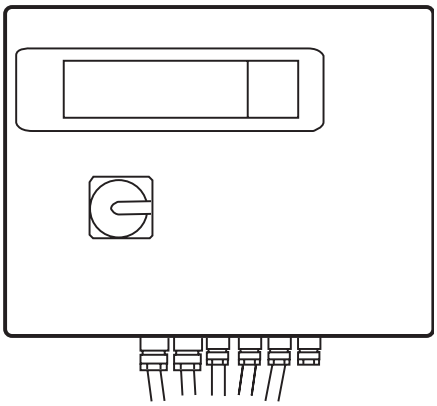

Water-tightness: IP 54.
Three-phase supply: 230/400V (50 Hz)
220 /380 V (60 Hz-option)
Mono (option): 230 V (50 Hz)
220/240 V (60 Hz)

DESCRIPTION: (2 or 3 pumps).
On the front:
- Control and viewing panel.
- Isolating knob for safety and to turn on power.

Inside:
- Pump protection by thermal relays with connection terminals to motors.
- Pump contacts.
- Safety isolating switch with connection terminals to the power supply.
- Protective fuse and selection of either 230 or 400 V.
- Transformer from 12 V mains to low-voltage controls.
- Thermal protection potentiometers for motors (max. 32 A per pump).
- Connectors for the power-supply pin to the indicator lights and the delay timers.
- Terminal block for external controls (pressure switch, float switch, remote controls).

OPERATION
The booster pump is operated by two simple pressure switches in version 2 pumps, and by a dead band pressure switch in version 3 pumps.
Otherwise, the operation is the same as with an electromechanical switch box.
A remote control can be installed in logic controller system and the terminal block.

SPEED VARIATION SWITCH BOX

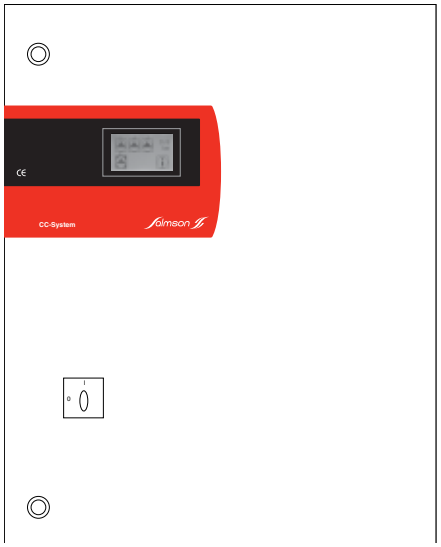

Three-phase supply: 230/400V (50 Hz)
220/380 V (60 Hz-option)
Single-phase (option): 230 V (50 Hz)
220/240 V (60 Hz)

DESCRIPTION: (one controlled pump and one or two pre-set pumps)
On the front:
- Back-lit control and viewing touch screen.
- Locks
- Isolating power knob

inside:
- Thermal magnetic circuit breaker with slider for adjusting current strength to the motor (and reset button) for pre-set pump(s)..
- Two contacts for each pump (one for fixed speed and one for variable speed).
- Safety and insulating transformer.
- General isolating switch with lockable handle for external controls.
- 3-position Auto/Stop/Manual switch for each pump.
- Programmable logic controller (API)
- Speed controller
- Motor filter
- Inlet filter card
- Terminal block for the power (General supply, motors).
- A terminal block for external controls (pressure transmitter, float switch or pressure safety switch, remote controls...).

OPERATION:
The pressure transmitter records the existing pressure in the outlet pipe and sends signals to the programmable logic controller. If the pressure becomes lower than the value set, the regulator sends a message to the pressure controller to increase the speed of the pump being used, referred to as the “controlled pump”. If the controlled pump reaches its maximum rotation speed and the pressure is still too low, the logic controller cuts-in pump P2 at fixed speed; the speed of P1 adjusts to maintain the selected setting. If the combined flow of P1 and P2 is still not adequate, P3 (HYDROPLUS 3 pumps) is cut-in in the same way.
If the pressure becomes too high, the logic controller adjusts P1 to the minimum selected speed, and if the pressure is still too high, it stops the last fixed-speed pump to be cut-in.
Then, it returns P1 to its maximum speed before of reducing it to the minimum speed, then it stops the last but one fixed speed pump (where necessary), and so on until the set value is reached.
At the end of the cycle, if there is no more demand, the logic controller will detect that there is no the flow and will stop pump P1.
Note:
On all booster pump (2 and 3 pump) models, the starting order of the pumps is changed after each stop.

HYDROPLUS

ELECTRICAL SPECIFICATIONS AT 2900 RPM

TYPE	Total motor power (P1) installed in kW		Max. operating pressure	Voltage	Total capacity under 3 ~ 230V	Total capacity under 3 ~ 400V
			bar		A	A
2 PUMPS - Switch box CA, CE or CCFC - Mains supply or tank						
N-Alti VS202-2 or 3 pumps...T4	2 or 3x	0,51	16 bar	400V-3~50 Hz	2 or 3x 2,1A	2 or 3x 1,2A
N-Alti VS203-2 or 3 pumps...T4	2 or 3x	0,72	16 bar	400V-3~50 Hz	2 or 3x 2,6A	2 or 3x 1,5A
N-Alti VS204-2 or 3 pumps...T4	2 or 3x	0,88	16 bar	400V-3~50 Hz	2 or 3x 3A	2 or 3x 1,7A
N-Alti VS205-2 or 3 pumps...T4	2 or 3x	1,2	16 bar	400V-3~50 Hz	2 or 3x 4,51A	2 or 3x 2,6A
N-Alti VS206-2 or 3 pumps...T4	2 or 3x	1,38	16 bar	400V-3~50 Hz	2 or 3x 4,9A	2 or 3x 2,8A
N-Alti VS207-2 or 3 pumps...T4	2 or 3x	1,53	16 bar	400V-3~50 Hz	2 or 3x 5,2A	2 or 3x 3A
N-Alti VS208-2 or 3 pumps...T4	2 or 3x	1,69	16 bar	400V-3~50 Hz	2 or 3x 5,6A	2 or 3x 3,2A
N-Alti VS209-2 or 3 pumps...T4	2 or 3x	2,14	16 bar	400V-3~50 Hz	2 or 3x 8A	2 or 3x 4,6A
N-Alti VS210-2 or 3 pumps...T4	2 or 3x	2,33	16 bar	400V-3~50 Hz	2 or 3x 8,5A	2 or 3x 4,9A
N-Alti VS402-2 or 3 pumps...T4	2 or 3x	0,69	16 bar	400V-3~50 Hz	2 or 3x 2,6A	2 or 3x 1,5A
N-Alti VS403-2 or 3 pumps...T4	2 or 3x	1,02	16 bar	400V-3~50 Hz	2 or 3x 4,2A	2 or 3x 2,4A
N-Alti VS404-2 or 3 pumps...T4	2 or 3x	1,26	16 bar	400V-3~50 Hz	2 or 3x 4,5A	2 or 3x 2,6A
N-Alti VS405-2 or 3 pumps...T4	2 or 3x	1,48	16 bar	400V-3~50 Hz	2 or 3x 5,2A	2 or 3x 3A
N-Alti VS406-2 or 3 pumps...T4	2 or 3x	1,7	16 bar	400V-3~50 Hz	2 or 3x 5,6A	2 or 3x 3,2A
N-Alti VS407-2 or 3 pumps...T4	2 or 3x	2,2	16 bar	400V-3~50 Hz	2 or 3x 8A	2 or 3x 4,6A
N-Alti VS408-2 or 3 pumps...T4	2 or 3x	2,4	16 bar	400V-3~50 Hz	2 or 3x 8,5A	2 or 3x 4,9A
N-Alti VS409-2 or 3 pumps...T4	2 or 3x	2,69	16 bar	400V-3~50 Hz	2 or 3x 9,2A	2 or 3x 5,3A
N-Alti VS410-2 or 3 pumps...T4	2 or 3x	2,94	16 bar	400V-3~50 Hz	2 or 3x 9,7A	2 or 3x 5,6A
N-Alti VS802-2 or 3 pumps...T4	2 or 3x	1,25	16 bar	400V-3~50 Hz	2 or 3x 4,5A	2 or 3x 2,6A
N-Alti VS803-2 or 3 pumps...T4	2 or 3x	1,6	16 bar	400V-3~50 Hz	2 or 3x 5,4A	2 or 3x 3,1A
N-Alti VS804-2 or 3 pumps...T4	2 or 3x	1,95	16 bar	400V-3~50 Hz	2 or 3x 6,3A	2 or 3x 3,6A
N-Alti VS805-2 or 3 pumps...T4	2 or 3x	2,67	16 bar	400V-3~50 Hz	2 or 3x 9,2A	2 or 3x 5,3A
N-Alti VS806-2 or 3 pumps...T4	2 or 3x	2,98	16 bar	400V-3~50 Hz	2 or 3x 9,7A	2 or 3x 5,6A

TYPE	P2 Total installed		Max. operating pressure	Voltage	Total I
	kW		bar		A
2 PUMPS - Switch box CA, CE - Mains supply or tank					
N-ALTI-H203-2...T4	2x	0,55	10	400V-3~50 Hz	3,1
N-ALTI-H204-2...T4	2x	0,55	10	400V-3~50 Hz	3,1
N-ALTI-H205-2...T4	2x	0,75	10	400V-3~50 Hz	3,7
N-ALTI-H206-2...T4	2x	1,1	10	400V-3~50 Hz	5,4
N-ALTI-H403-2...T4	2x	0,55	10	400V-3~50 Hz	3,1
N-ALTI-H404-2...T4	2x	0,75	10	400V-3~50 Hz	3,7
N-ALTI-H405-2...T4	2x	1,1	10	400V-3~50 Hz	5,4
N-ALTI-H406-2...T4	2x	1,5	10	400V-3~50 Hz	5,4
N-ALTI-H803-2...T4	2x	1,1	10	400V-3~50 Hz	5,4
N-ALTI-H804-2...T4	2x	1,5	10	400V-3~50 Hz	7
N-ALTI-H805-2...T4	2x	1,85	10	400V-3~50 Hz	10,2
N-ALTI-H1602-2...T4	2x	1,5	10	400V-3~50 Hz	7
N-ALTI-H1603-2...T4	2x	1,85	10	400V-3~50 Hz	10,2
N-ALTI-H1604N-2...T4	2x	2,5	10	400V-3~50 Hz	10,2

TYPE	P2 Total installed		Max. operating pressure	Voltage	Total I
	kW		bar		A
3 PUMPS - Switch box CA or CE - Mains supply or tank					
N-ALTI-H203-3...T4	3x	0,55	10	400V-3~50 Hz	4,65
N-ALTI-H204-3...T4	3x	0,55	10	400V-3~50 Hz	4,65
N-ALTI-H205-3...T4	3x	0,75	10	400V-3~50 Hz	5,55
N-ALTI-H206-3...T4	3x	1,1	10	400V-3~50 Hz	8,1
N-ALTI-H403-3...T4	3x	0,55	10	400V-3~50 Hz	4,65
N-ALTI-H404-3...T4	3x	0,75	10	400V-3~50 Hz	5,55
N-ALTI-H405-3...T4	3x	1,1	10	400V-3~50 Hz	8,1
N-ALTI-H406-3...T4	3x	1,5	10	400V-3~50 Hz	8,1
N-ALTI-H803-3...T4	3x	1,1	10	400V-3~50 Hz	8,1
N-ALTI-H804-3...T4	3x	1,5	10	400V-3~50 Hz	10,5
N-ALTI-H805-3...T4	2x	1,85	10	400V-3~50 Hz	15,3
N-ALTI-H1602-3...T4	3x	1,5	10	400V-3~50 Hz	10,5
N-ALTI-H1603-3...T4	3x	1,85	10	400V-3~50 Hz	15,3
N-ALTI-H1604N-3...T4	3x	2,5	10	400V-3~50 Hz	15,3

ELECTRICAL SPECIFICATIONS AT 2900 RPM

TYPE	Total motor power P2 installed in kW		Max. operating pressure	Voltage	Total i 2 pumps	Total i 3 pumps
			bar		A	A
N-ALTi-V203-2 or 3 pumps...T4	2 or 3x	0,55	16	400V-3~50 Hz	2,66	3,99
N-ALTi-V204-2 or 3 pumps...T4	2 or 3x	0,75	16	400V-3~50 Hz	3,24	4,86
N-ALTi-V205-2 or 3 pumps...T4	2 or 3x	0,75	16	400V-3~50 Hz	3,24	4,86
N-ALTi-V206-2 or 3 pumps...T4	2 or 3x	1,1	16	400V-3~50 Hz	4,8	7,2
N-ALTi-V207-2 or 3 pumps...T4	2 or 3x	1,1	16	400V-3~50 Hz	4,8	7,2
N-ALTi-V208-2 or 3 pumps...T4	2 or 3x	1,5	16	400V-3~50 Hz	6,2	9,3
N-ALTi-V210-2 or 3 pumps...T4	2 or 3x	1,5	16	400V-3~50 Hz	6,2	9,3
N-ALTi-V212-2 or 3 pumps...T4	2 or 3x	1,85	16	400V-3~50 Hz	8,8	13,2
N-ALTi-V403-2 or 3 pumps...T4	2 or 3x	0,75	16	400V-3~50 Hz	3,24	4,86
N-ALTi-V404-2 or 3 pumps...T4	2 or 3x	1,1	16	400V-3~50 Hz	4,8	7,2
N-ALTi-V405-2 or 3 pumps...T4	2 or 3x	1,1	16	400V-3~50 Hz	4,8	7,2
N-ALTi-V406-2 or 3 pumps...T4	2 or 3x	1,5	16	400V-3~50 Hz	6,2	9,3
N-ALTi-V407-2 or 3 pumps...T4	2 or 3x	1,5	16	400V-3~50 Hz	6,2	9,3
N-ALTi-V408-2 or 3 pumps...T4	2 or 3x	1,85	16	400V-3~50 Hz	8,8	13,2
N-ALTi-V410-2 or 3 pumps...T4	2 or 3x	2,2	16	400V-3~50 Hz	8,8	13,2
N-ALTi-V412-2 or 3 pumps...T4	2 or 3x	3	16	400V-3~50 Hz	11,56	17,34
N-ALTi-V803-2 or 3 pumps...T4	2 or 3x	1,1	16	400V-3~50 Hz	4,8	7,2
N-ALTi-V804-2 or 3 pumps...T4	2 or 3x	1,5	16	400V-3~50 Hz	6,2	9,3
N-ALTi-V805-2 or 3 pumps...T4	2 or 3x	1,85	16	400V-3~50 Hz	8,8	13,2
N-ALTi-V806-2 or 3 pumps...T4	2 or 3x	2,2	16	400V-3~50 Hz	8,8	13,2
N-ALTi-V807-2 or 3 pumps...T4	2 or 3x	3	16	400V-3~50 Hz	11,56	17,34
N-ALTi-V808-2 or 3 pumps...T4	2 or 3x	3	16	400V-3~50 Hz	11,56	17,34
N-ALTi-V810-2 or 3 pumps...T4	2 or 3x	3,7	16	400V-3~50 Hz	15,4	23,1
N-ALTi-V811-2 or 3 pumps...T4	2 or 3x	4	16	400V-3~50 Hz	15,4	23,1
N-ALTi-V812-2 or 3 pumps...T4	2 or 3x	5,5	16	400V-3~50 Hz	21,2	31,8

HYDROPLUS

HYDRAULICS PERFORMANCES - N-ALTI H

• N-Alti H - 2900 RPM - 200 SERIE

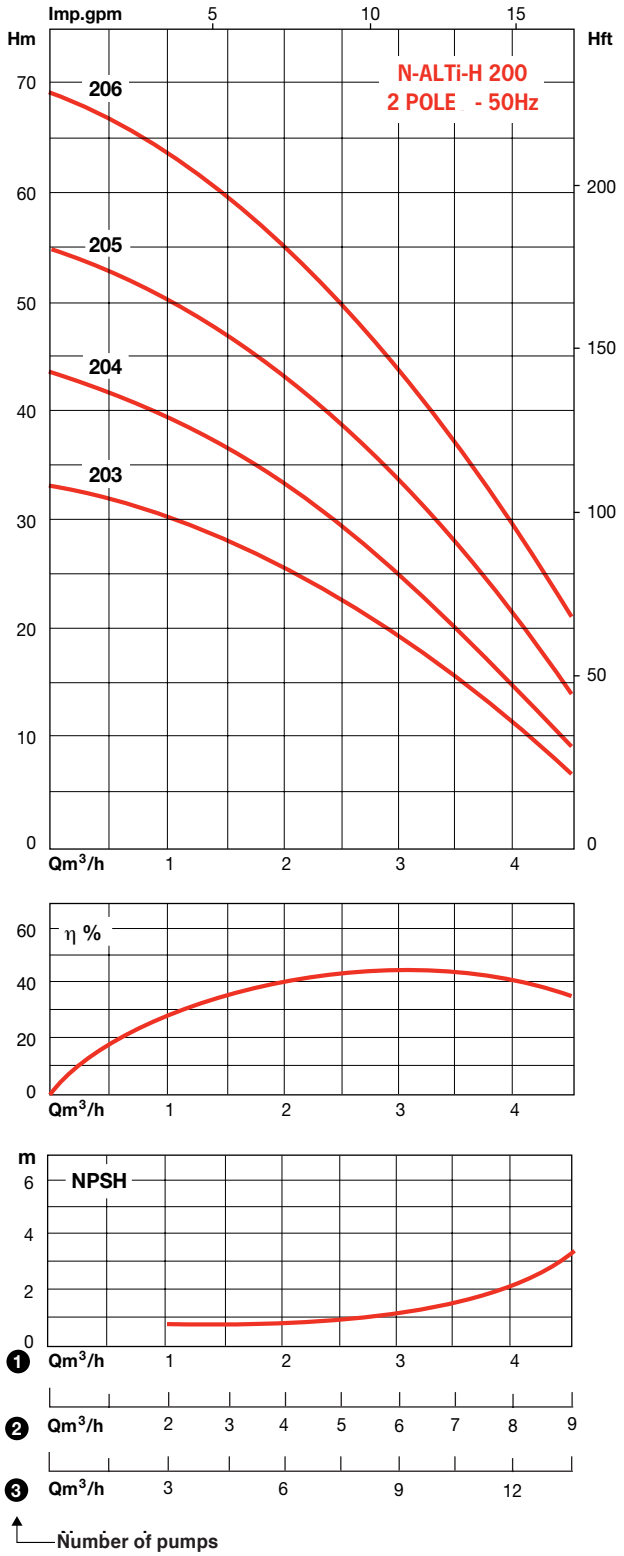

• N-Alti H - 2900 RPM - 400 SERIE

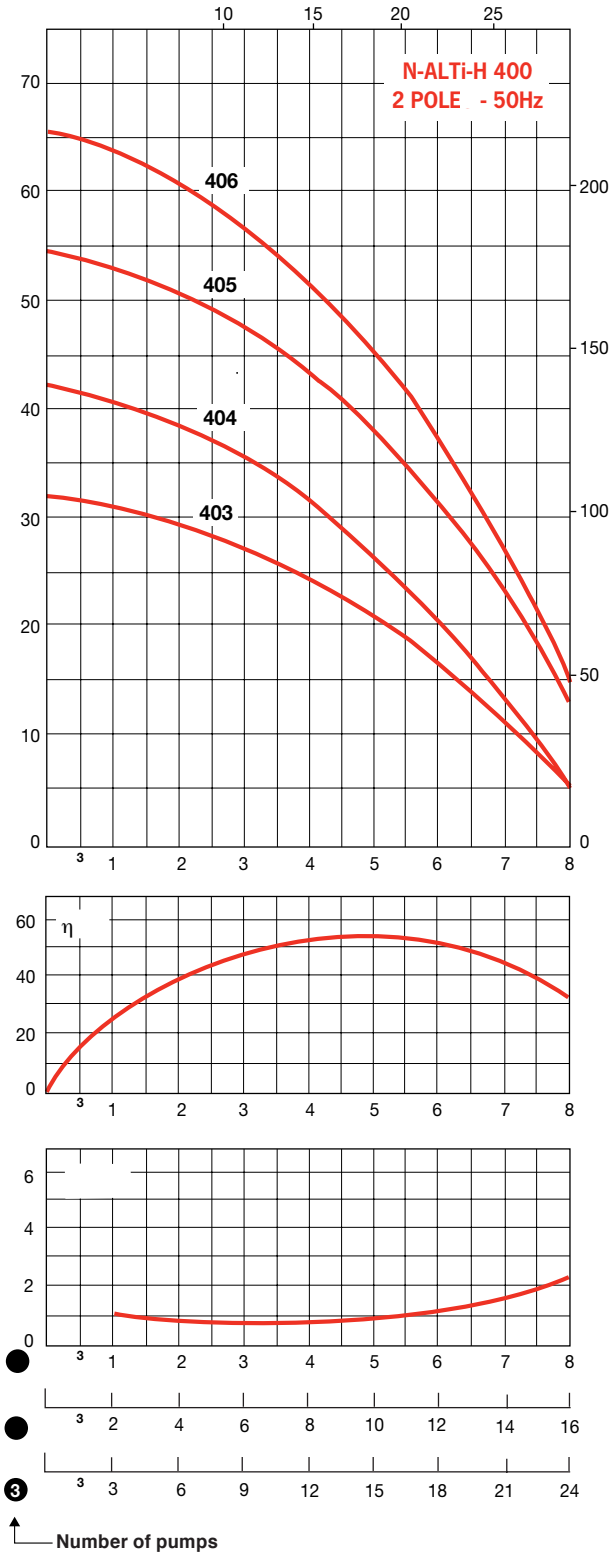

HYDRAULICS PERFORMANCES - N-ALTI H

• N-Alti H - 2900 RPM - 800 SERIE

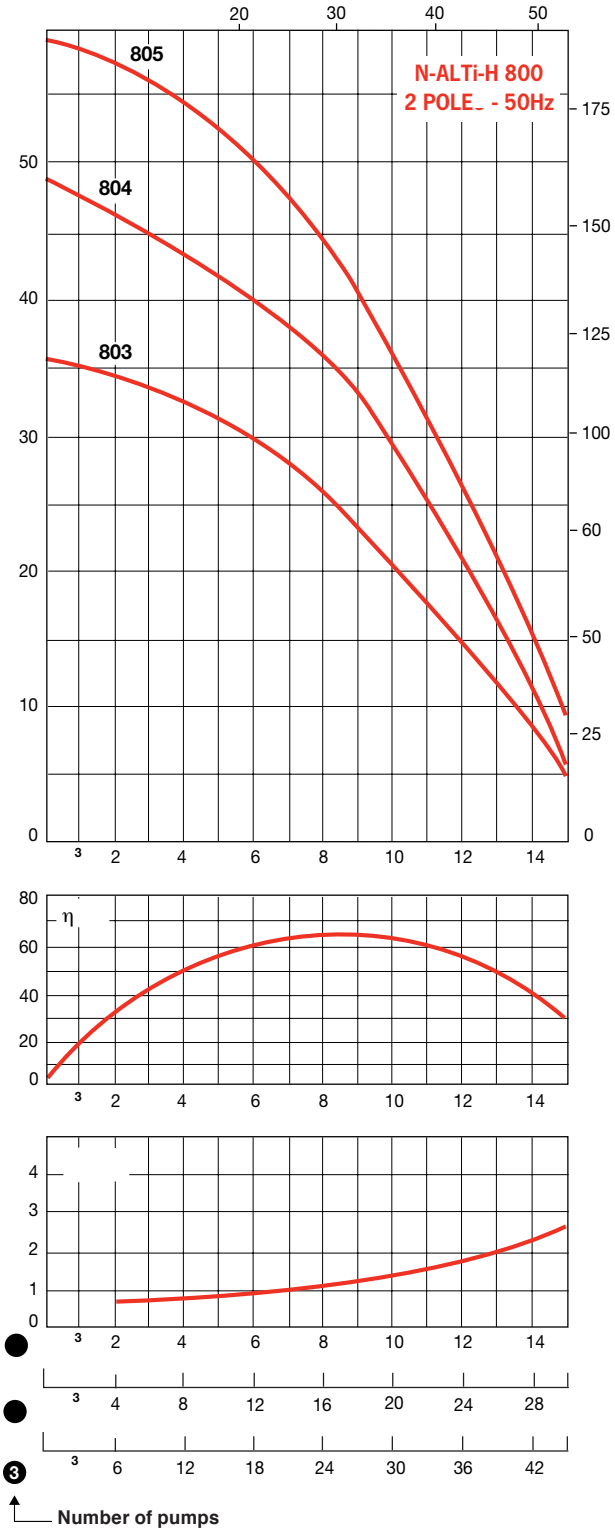

• N-Alti H - 2900 RPM - 1600 SERIE

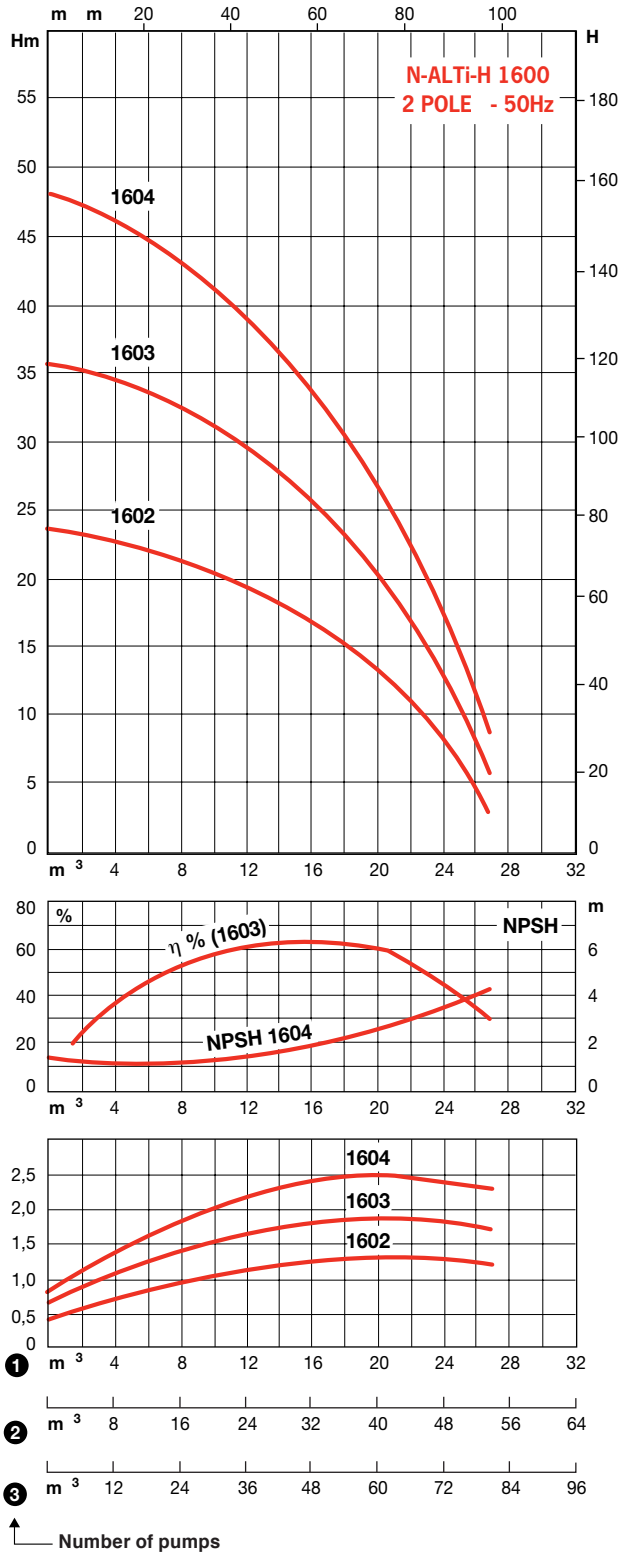

HYDROPLUS

HYDRAULICS PERFORMANCES - N-ALTI H

• N-ALTi-V - 2900 RPM - 200 SERIE

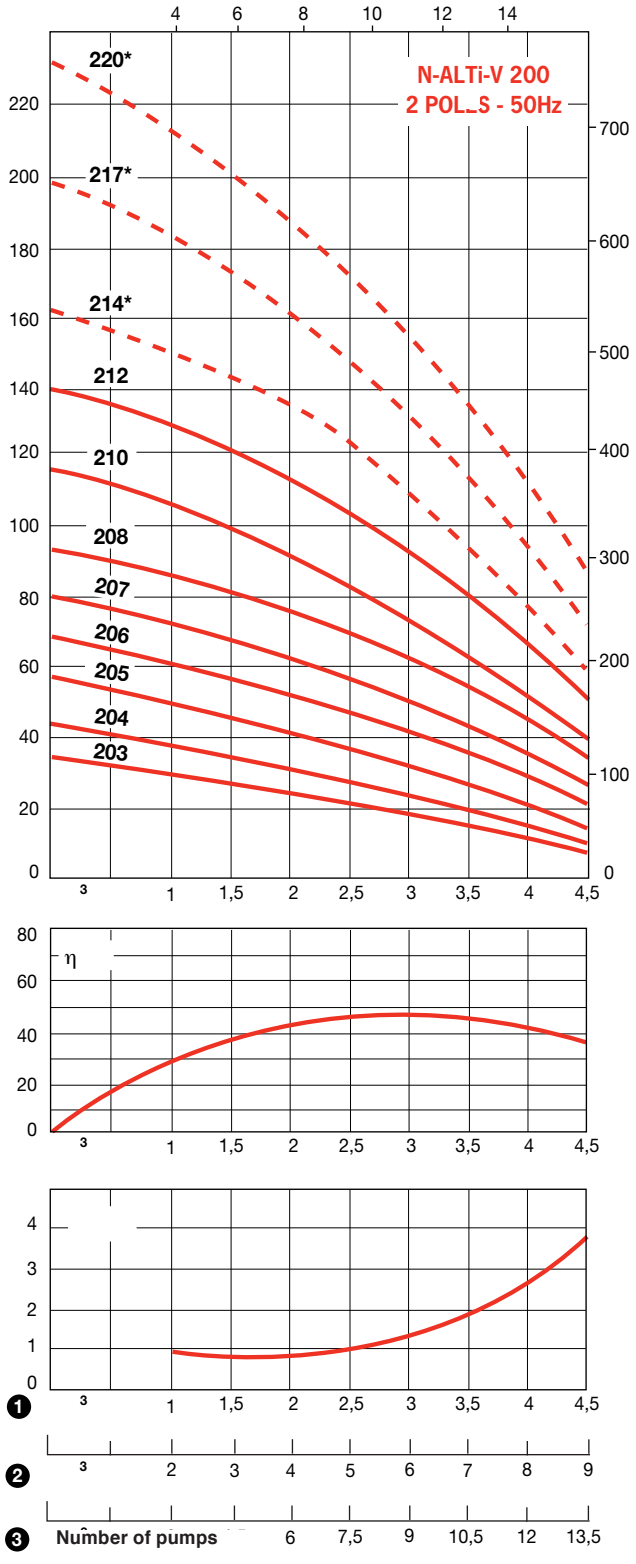

•2900 RPM - 400 SERIE

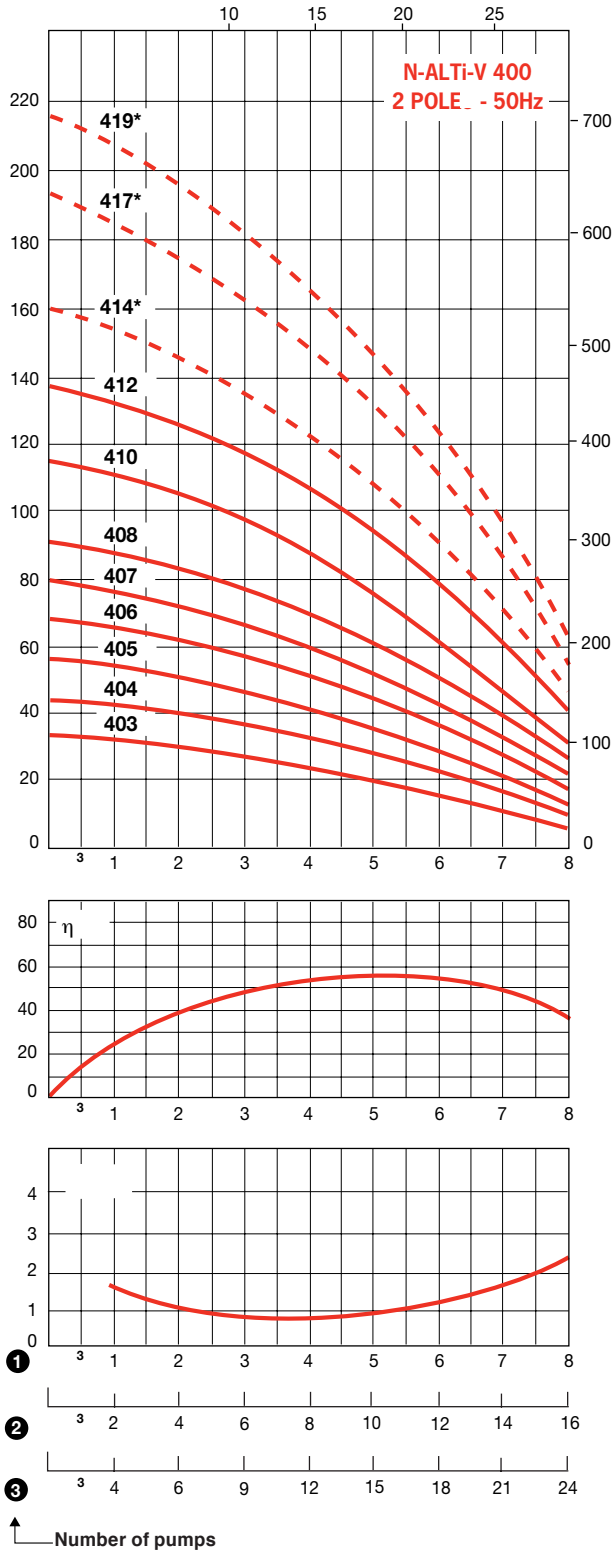

HYDRAULICS PERFORMANCES - N-ALTI H - N-ALTI-V

• N-ALTi-V - 2900 RPM - 800 SERIE

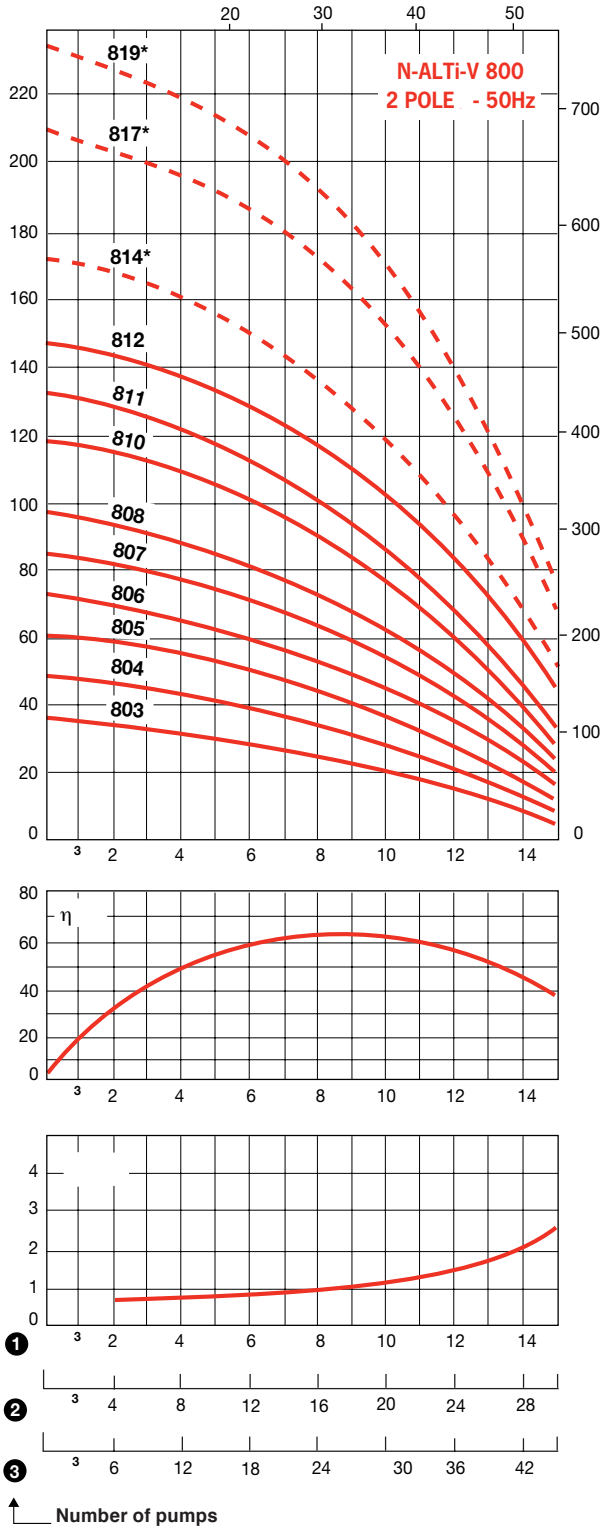

HYDROPLUS

HYDRAULICS PERFORMANCES - N-ALTI VS

• N-Alti VS - 2900 RPM - 200 SERIE

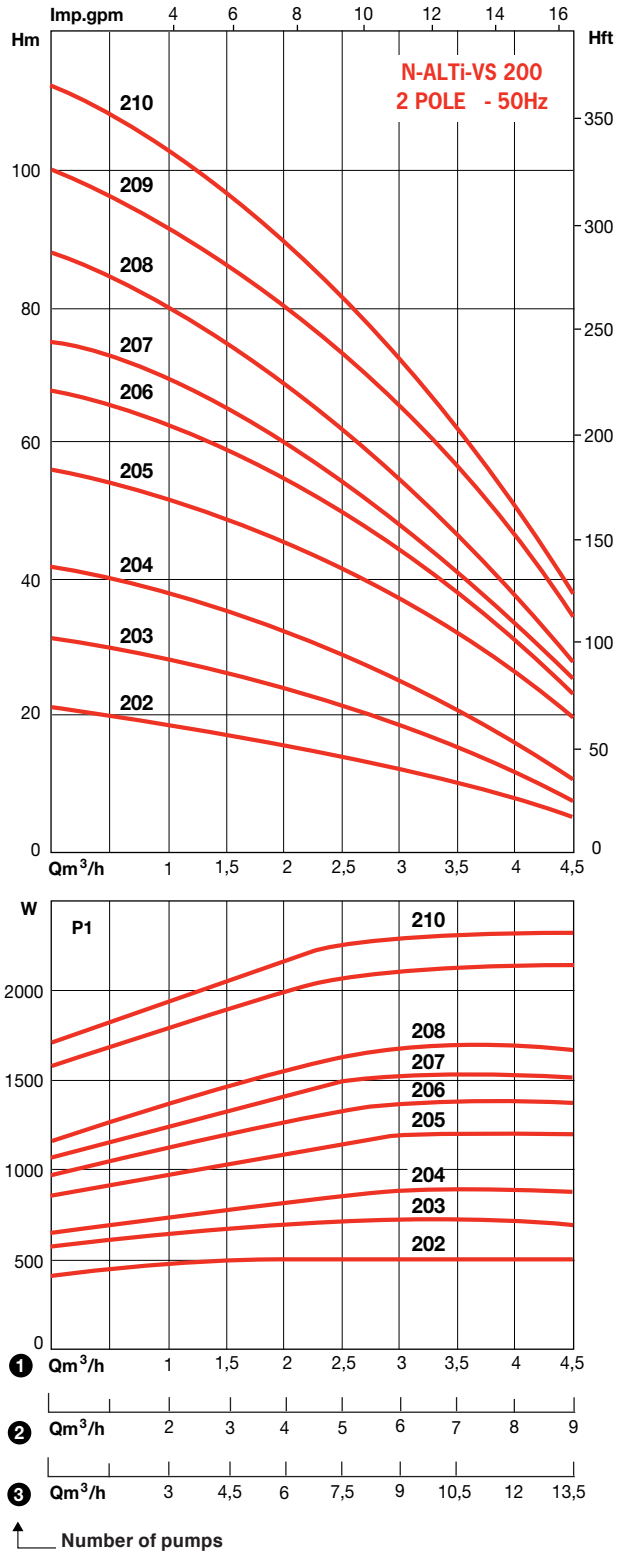

• N-Alti VS - 2900 RPM - 400 SERIE

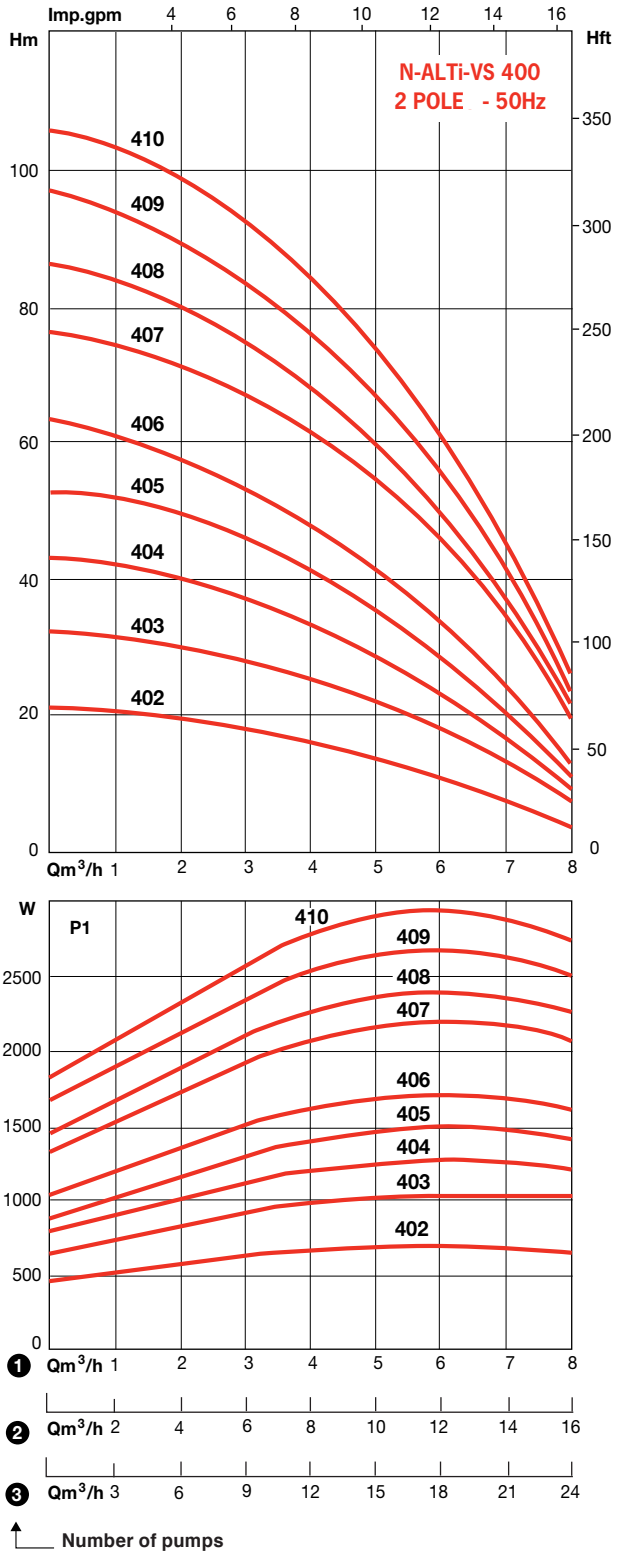

HYDRAULICS PERFORMANCES - N-ALTI VS

• N-Alti VS - 2900 RPM - 800 SERIE

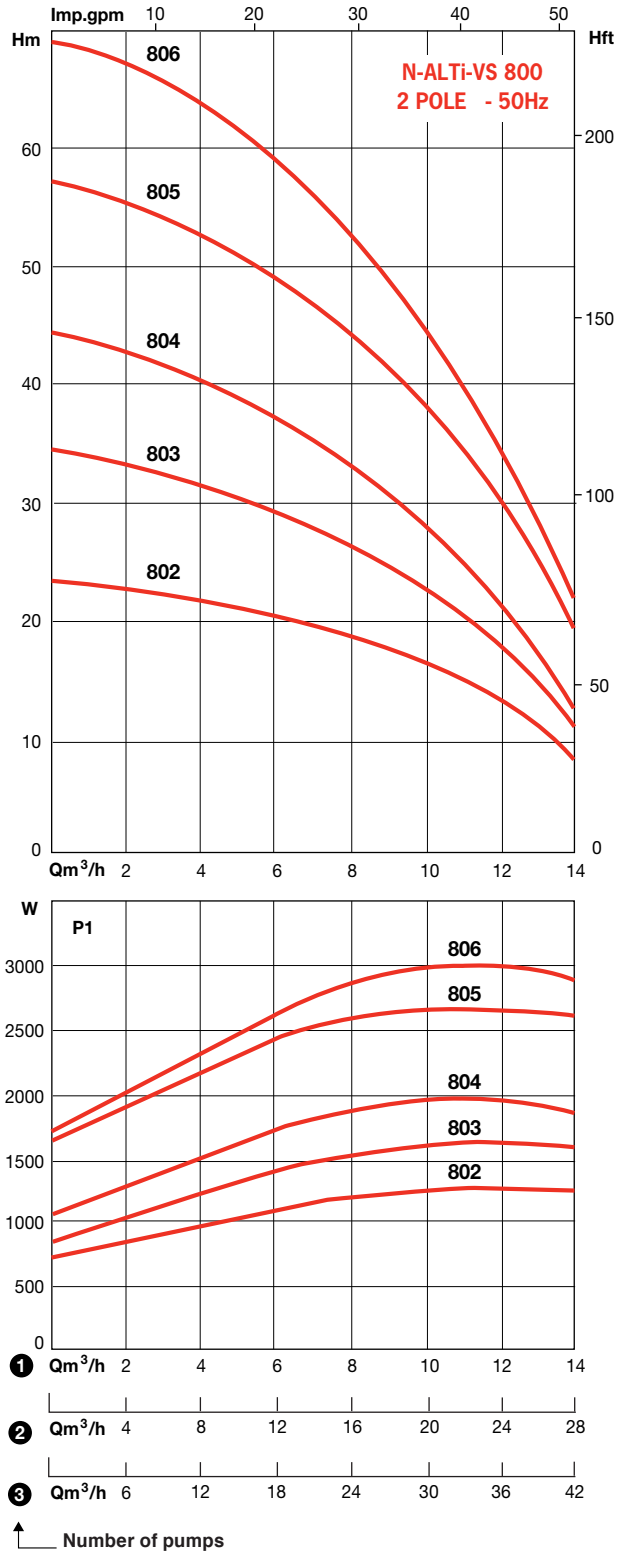

HYDROPLUS

ELECTRICAL SPECIFICATIONS AND SIZES - N-ALTI H SERIE- CE VERSION

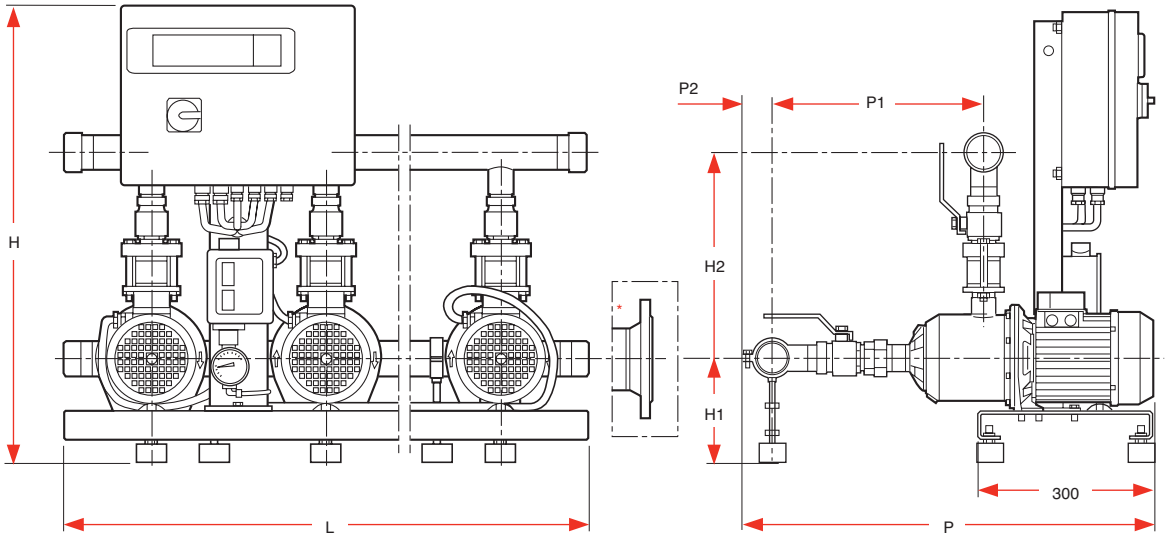

TYPE	Ø	H	L	P	H1	H2	P1	P2
	Pipes	mm	mm	mm	mm	mm	mm	mm
2 PUMPS								
N-Alti H203-2-CE-V or B-10-T4	2”	773	600	656	188	344	296	55
N-Alti H204-2-CE-V or B-10-T4	2”	773	600	704	188	344	344	55
N-Alti H205-2-CE-V or B-10-T4	2”	773	600	704	188	344	344	55
N-Alti H206-2-CE-V or B-10-T4	2”	773	600	728	188	344	368	55
N-Alti H403-2-CE-V or B-10-T4	2”	773	600	670	188	344	310	55
N-Alti H404-2-CE-V or B-10-T4	2”	773	600	718	188	344	358	55
N-Alti H405-2-CE-V or B-10-T4	2”	773	600	718	188	344	358	55
N-Alti H406-2-CE-V or B-10-T4	2”	773	600	742	188	344	382	55
N-Alti H803-2-CE-V or B-10-T4	2”1/2	773	600	713	188	352	345	63
N-Alti H804-2-CE-V or B-10-T4	2”1/2	773	600	811	188	352	405	63
N-Alti H805-2-CE-V or B-10-T4	2”1/2	773	600	811	188	352	405	63
N-Alti H1602-2-CE-V or B-10-T4	3”	773	600	800	188	392	383	72
N-Alti H1603-2-CE-V or B-10-T4	3”	773	600	800	188	392	383	72
N-Alti H1604N-2-CE-V or B-10-T4	3”	773	600	844	198	392	428	72
3 PUMPS								
N-Alti H203-3-CE-V or B-10-T4	2”	773	900	656	188	344	296	55
N-Alti H204-3-CE-V or B-10-T4	2”	773	900	704	188	344	344	55
N-Alti H205-3-CE-V or B-10-T4	2”	773	900	704	188	344	344	55
N-Alti H206-3-CE-V or B-10-T4	2”	773	900	728	188	344	368	55
N-Alti H403-3-CE-V or B-10-T4	2”	773	900	670	188	344	310	55
N-Alti H404-3-CE-V or B-10-T4	2”	773	900	718	188	344	358	55
N-Alti H405-3-CE-V or B-10-T4	2”	773	900	718	188	344	358	55
N-Alti H406-3-CE-V or B-10-T4	2”	773	900	742	188	344	382	55
N-Alti H803-3-CE-V or B-10-T4	2”1/2	773	900	713	188	352	345	63
N-Alti H804-3-CE-V or B-10-T4	2”1/2	773	900	811	188	352	405	63
N-Alti H805-3-CE-V or B-10-T4	2”1/2	773	900	811	188	352	405	63
N-Alti H1602-3-CE-V or B-10-T4	DN100*	773	900	853	188	407	398	110
N-Alti H1603-3-CE-V or B-10-T4	DN100*	773	900	853	188	407	398	110
N-Alti H1604N-3-CE-V or B-10-T4	DN100*	773	900	897	198	407	443	110

ELECTRICAL SPECIFICATIONS AND SIZES - N-ALTI H SERIE- CA VERSION

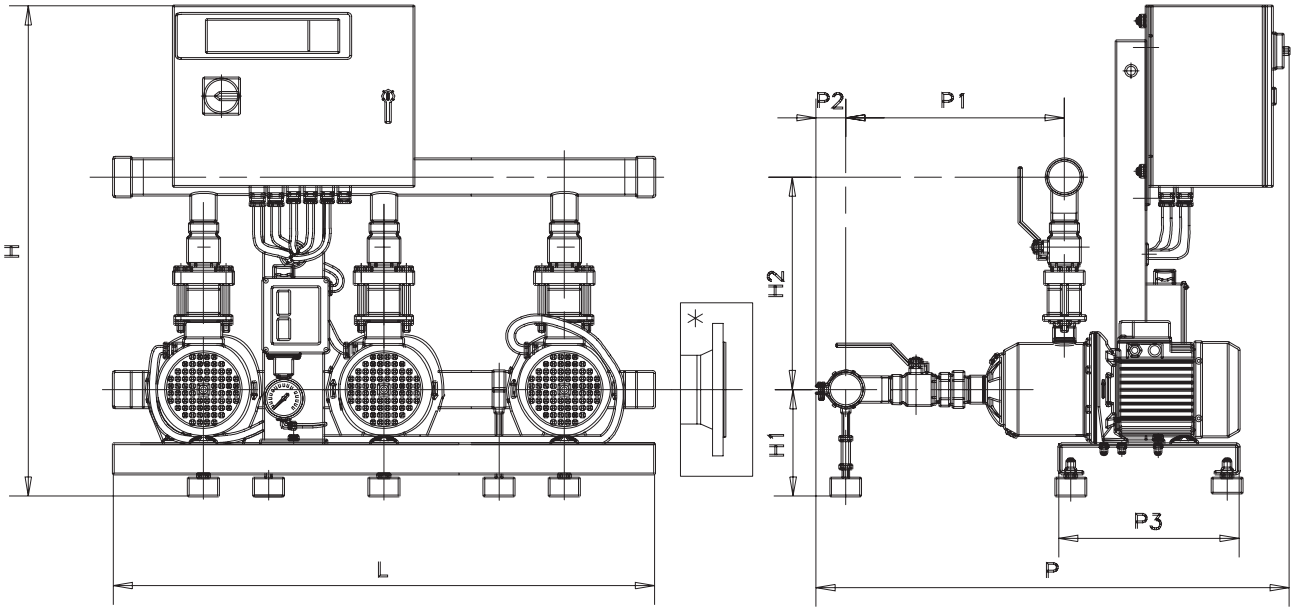

TYPE	Ø	H	L	P	H1	H2	P1	P2
	Pipes	mm	mm	mm	mm	mm	mm	mm
2 PUMPS								
N-ALTI-H203-2-CA-V-10-T4	2»	773	600	759	188	344	296	55
N-ALTI-H204-2-CA-V-10-T4	2»	773	600	807	188	344	344	55
N-ALTI-H205-2-CA-V-10-T4	2»	773	600	807	188	344	344	55
N-ALTI-H206-2-CA-V-10-T4	2»	773	600	831	188	344	368	55
N-ALTI-H403-2-CA-V-10-T4	2»	773	600	773	188	344	310	55
N-ALTI-H404-2-CA-V-10-T4	2»	773	600	821	188	344	358	55
N-ALTI-H405-2-CA-V-10-T4	2»	773	600	821	188	344	358	55
N-ALTI-H406-2-CA-V-10-T4	2»	773	600	845	188	344	382	55
N-ALTI-H803-2-CA-V-10-T4	2»1/2	773	600	813	188	352	345	63
N-ALTI-H804-2-CA-V-10-T4	2»1/2	773	600	876	188	352	405	63
N-ALTI-H805-2-CA-V-10-T4	2»1/2	773	600	876	188	352	405	63
N-ALTI-H1602-2-CA-V-10-T4	3»	773	600	863	188	392	383	72
N-ALTI-H1603-2-CA-V-10-T4	3»	773	600	863	188	392	383	72
N-ALTI-H1604N-2-CA-V-10-T4	3»	773	600	908	198	392	428	72
3 PUMPS								
N-ALTI-H203-3-CA-V-10-T4	2»	773	900	759	188	344	296	55
N-ALTI-H204-3-CA-V-10-T4	2»	773	900	807	188	344	344	55
N-ALTI-H205-3-CA-V-10-T4	2»	773	900	807	188	344	344	55
N-ALTI-H206-3-CA-V-10-T4	2»	773	900	831	188	344	368	55
N-ALTI-H403-3-CA-V-10-T4	2»	773	900	773	188	344	310	55
N-ALTI-H404-3-CA-V-10-T4	2»	773	900	821	188	344	358	55
N-ALTI-H405-3-CA-V-10-T4	2»	773	900	821	188	344	358	55
N-ALTI-H406-3-CA-V-10-T4	2»	773	900	845	188	344	382	55
N-ALTI-H803-3-CA-V-10-T4	2»1/2	773	900	813	188	352	345	63
N-ALTI-H804-3-CA-V-10-T4	2»1/2	773	900	876	188	352	405	63
N-ALTI-H805-3-CA-V-10-T4	2»1/2	773	900	876	188	352	405	63
N-ALTI-H1602-3-CA-V-10-T4	*DN100	773	900	916	188	407	398	110
N-ALTI-H1603-3-CA-V-10-T4	*DN100	773	900	916	188	407	398	110
N-ALTI-H1604N-3-CA-V-10-T4	*DN100	773	900	961	198	407	443	110

HYDROPLUS

ELECTRICAL SPECIFICATIONS AND SIZES - N-ALTI V OR VS SERIE - CE VERSION

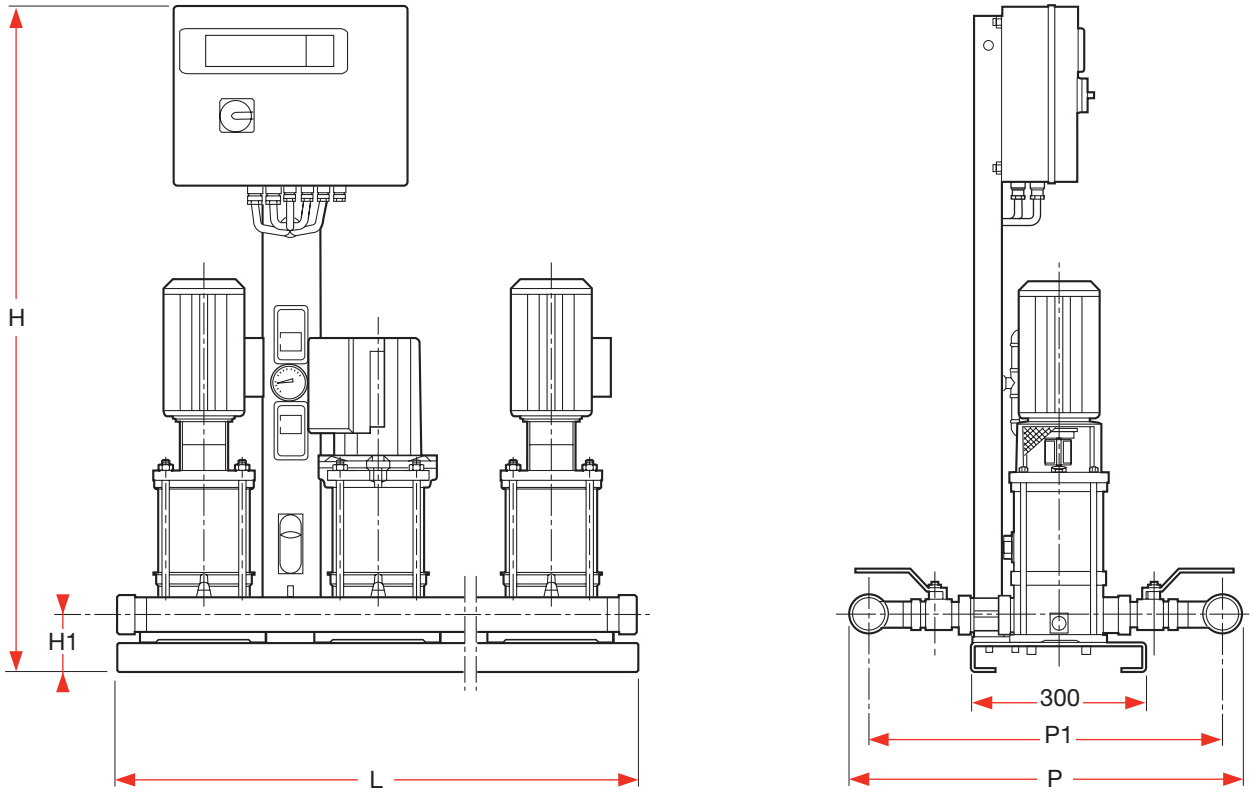

TYPE	Ø	H	L	P	H1	P1
	Pipes	mm	mm	mm	mm	mm
2 PUMPS						
N-ALTi-V or VS 203-2-CE-V or B-16-T4	2”	1150	600	610	100	550
N-ALTi-V or VS 204-2-CE-V or B-16-T4	2”	1150	600	610	100	550
N-ALTi-V or VS 205-2-CE-V or B-16-T4	2”	1150	600	610	100	550
N-ALTi-V or VS 206-2-CE-V or B-16-T4	2”	1150	600	610	100	550
N-ALTi-V or VS 207-2-CE-V or B-16-T4	2”	1150	600	610	100	550
N-ALTi-V or VS 208-2-CE-V or B-16-T4	2”	1320	600	610	100	550
N-Alti VS 209-2-CE-V or B-16-T4	2”	1320	600	610	100	550
N-ALTi-V 210-2-CE-V or B-16-T4	2”	1320	600	610	100	550
N-ALTi-V 212-2-CE-V or B-16-T4	2”	1320	600	610	100	550
N-ALTi-V or VS 403-2-CE-V or B-16-T4	2”	1150	600	610	100	550
N-ALTi-V or VS 404-2-CE-V or B-16-T4	2”	1150	600	610	100	550
N-ALTi-V or VS 405-2-CE-V or B-16-T4	2”	1150	600	610	100	550
N-ALTi-V or VS 406-2-CE-V or B-16-T4	2”	1150	600	610	100	550
N-ALTi-V or VS 407-2-CE-V or B-16-T4	2”	1150	600	610	100	550
N-ALTi-V or VS 408-2-CE-V or B-16-T4	2”	1320	600	610	100	550
N-ALTi-V or VS 410-2-CE-V or B-16-T4	2”	1320	600	610	100	550
N-ALTi-V 412-2-CE-V or B-16-T4	2”	1320	600	610	100	550

TYPE	Ø	H	L	P	H1	P1
	Pipes	mm	mm	mm	mm	mm
3 PUMPS						
N-ALTi-V or VS 203-3-CE-V or B-16-T4	2”	1150	900	610	100	550
N-ALTi-V or VS 204-3-CE-V or B-16-T4	2”	1150	900	610	100	550
N-ALTi-V or VS 205-3-CE-V or B-16-T4	2”	1150	900	610	100	550
N-ALTi-V or VS 206-3-CE-V or B-16-T4	2”	1150	900	610	100	550
N-ALTi-V or VS 207-3-CE-V or B-16-T4	2”	1150	900	610	100	550
N-ALTi-V or VS 208-3-CE-V or B-16-T4	2”	1320	900	610	100	550
N-Alti VS 209-3-CE-V or B-16-T4	2”	1320	900	610	100	550
N-ALTi-V 210-3-CE-V or B-16-T4	2”	1320	900	610	100	550
N-ALTi-V 212-3-CE-V or B-16-T4	2”	1320	900	610	100	550
N-ALTi-V or VS 403-3-CE-V or B-16-T4	2”	1150	900	610	100	550
N-ALTi-V or VS 404-3-CE-V or B-16-T4	2”	1150	900	610	100	550
N-ALTi-V or VS 405-3-CE-V or B-16-T4	2”	1150	900	610	100	550
N-ALTi-V or VS 406-3-CE-V or B-16-T4	2”	1150	900	610	100	550
N-ALTi-V or VS 407-3-CE-V or B-16-T4	2”	1150	900	610	100	550
N-ALTi-V or VS 408-3-CE-V or B-16-T4	2”	1320	900	610	100	550
N-ALTi-V or VS 410-3-CE-V or B-16-T4	2”	1320	900	610	100	550
N-ALTi-V or VS 412-3-CE-V or B-16-T4	2”	1320	900	610	100	550

ELECTRICAL SPECIFICATIONS AND SIZES - N-ALTI V OR VS SERIE - CA VERSION

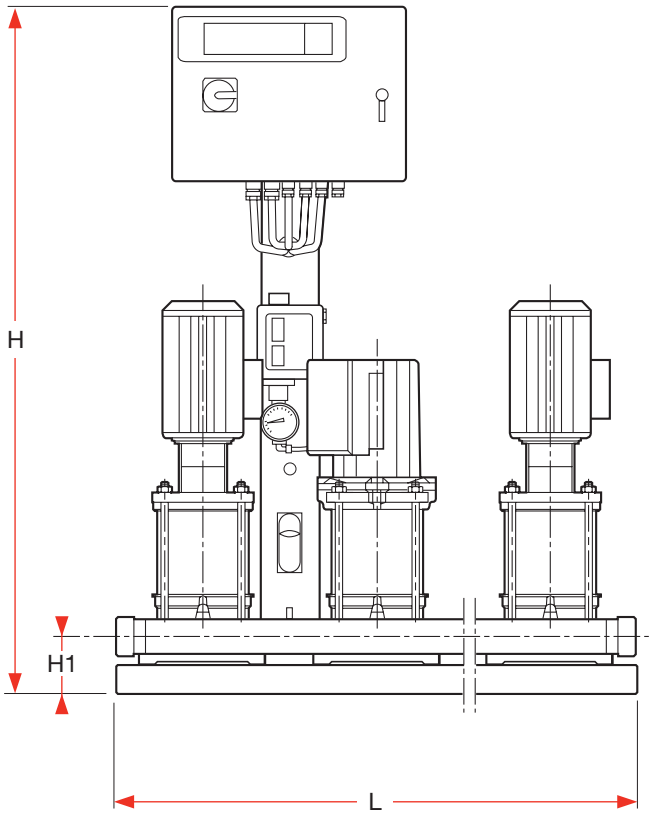

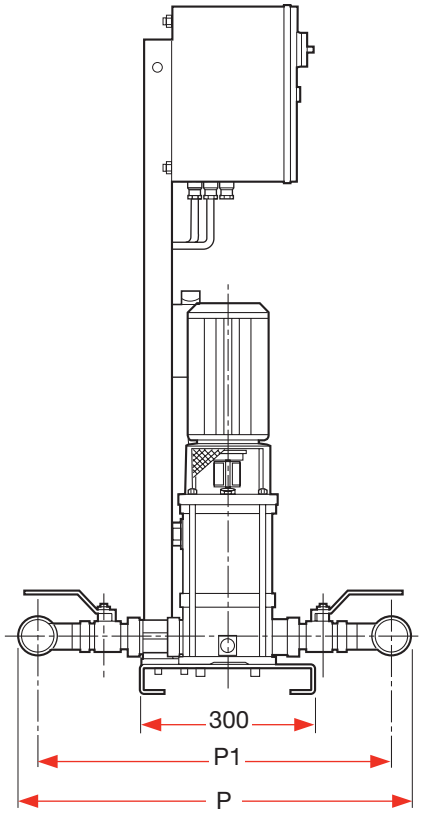

TYPE	Ø	H	L	P	H1	P1
	Pipes	mm	mm	mm	mm	mm
2 PUMPS						
N-ALTi-V or VS 203-2-CA-V or B-16-T4	2”	1150	600	610	100	550
N-ALTi-V or VS 204-2-CA-V or B-16-T4	2”	1150	600	610	100	550
N-ALTi-V or VS 205-2-CA-V or B-16-T4	2”	1150	600	610	100	550
N-ALTi-V or VS 206-2-CA-V or B-16-T4	2”	1150	600	610	100	550
N-ALTi-V or VS 207-2-CA-V or B-16-T4	2”	1150	600	610	100	550
N-ALTi-V or VS 208-2-CA-V or B-16-T4	2”	1320	600	610	100	550
N-Alti VS 209-2-CA-V or B-16-T4	2”	1320	600	610	100	550
N-ALTi-V 210-2-CA-V or B-16-T4	2”	1320	600	610	100	550
N-ALTi-V 212-2-CA-V or B-16-T4	2”	1320	600	610	100	550
N-ALTi-V or VS 403-2-CA-V or B-16-T4	2”	1150	600	610	100	550
N-ALTi-V or VS 404-2-CA-V or B-16-T4	2”	1150	600	610	100	550
N-ALTi-V or VS 405-2-CA-V or B-16-T4	2”	1150	600	610	100	550
N-ALTi-V or VS 406-2-CA-V or B-16-T4	2”	1150	600	610	100	550
N-ALTi-V or VS 407-2-CA-V or B-16-T4	2”	1150	600	610	100	550
N-ALTi-V or VS 408-2-CA-V or B-16-T4	2”	1320	600	610	100	550
N-ALTi-V or VS 410-2-CA-V or B-16-T4	2”	1320	600	610	100	550
N-ALTi-V 412-2-CA-V or B-16-T4	2”	1320	600	610	100	550

TYPE	Ø	H	L	P	H1	P1
	Pipes	mm	mm	mm	mm	mm
3 PUMPS						
N-ALTi-V or VS 203-3-CA-V or B-16-T4	2”	1150	900	610	100	550
N-ALTi-V or VS 204-3-CA-V or B-16-T4	2”	1150	900	610	100	550
N-ALTi-V or VS 205-3-CA-V or B-16-T4	2”	1150	900	610	100	550
N-ALTi-V or VS 206-3-CA-V or B-16-T4	2”	1150	900	610	100	550
N-ALTi-V or VS 207-3-CA-V or B-16-T4	2”	1150	900	610	100	550
N-ALTi-V or VS 208-3-CA-V or B-16-T4	2”	1320	900	610	100	550
N-Alti VS 209-3-CA-V or B-16-T4	2”	1320	900	610	100	550
N-ALTi-V 210-3-CA-V or B-16-T4	2”	1320	900	610	100	550
N-ALTi-V 212-3-CA-V or B-16-T4	2”	1320	900	610	100	550
N-ALTi-V or VS 403-3-CA-V or B-16-T4	2”	1150	900	610	100	550
N-ALTi-V or VS 404-3-CA-V or B-16-T4	2”	1150	900	610	100	550

HYDROPLUS

ELECTRICAL SPECIFICATIONS AND SIZES - N-ALTI-V OR VS SERIE- CE VERSION

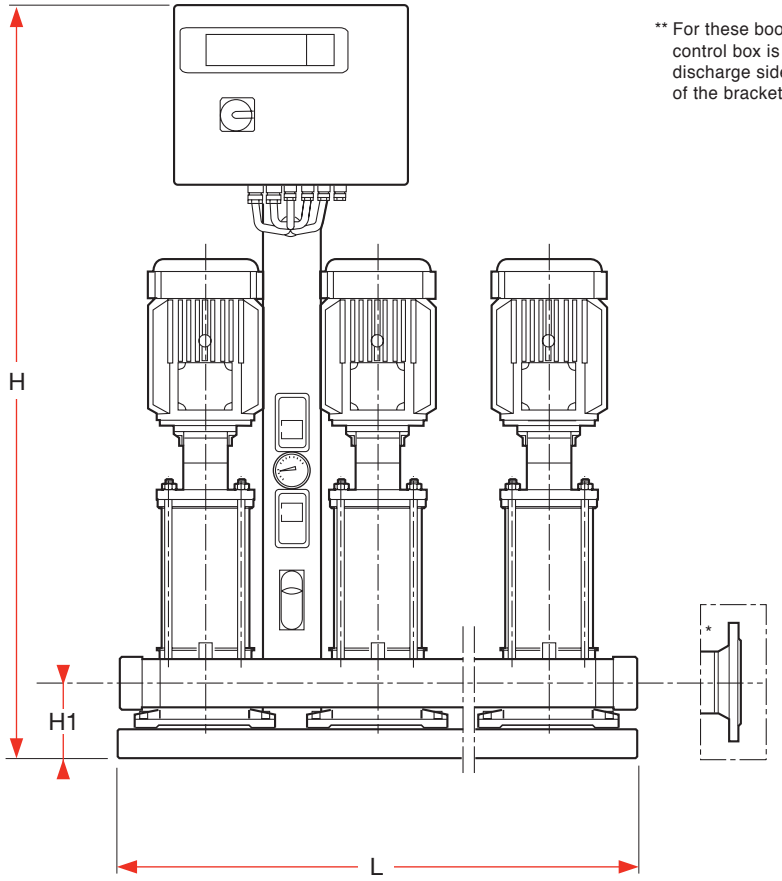

** For these boosters control box is oriented discharge side (rotation of the bracket 180°).

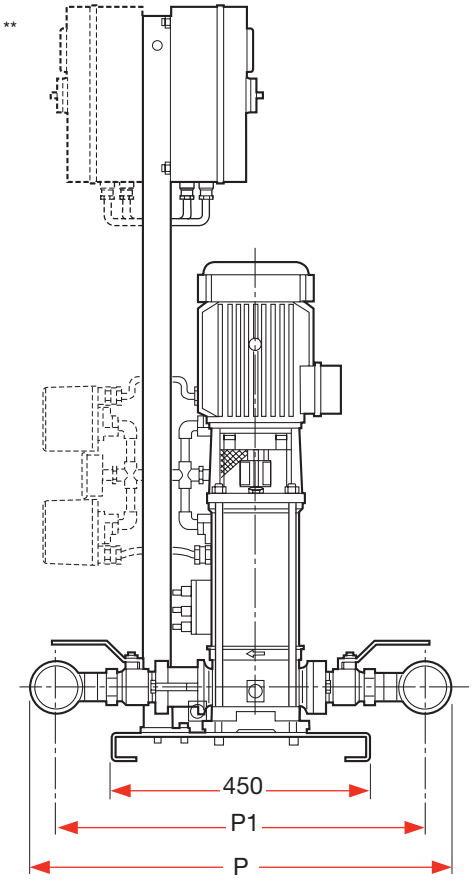

TYPE	Ø	H	L	P	H1	P1
	Pipes	mm	mm	mm	mm	mm
2 PUMPS						
N-Alti VS 802-2-CE-V or B-16-T4	2"1/2	1150	600	717	130	640
N-ALTi-V or VS 803-2-CE-V or B-16-T4	2"1/2	1150	600	717	130	640
N-ALTi-V or VS 804-2-CE-V or B-16-T4	2"1/2	1150	600	717	130	640
N-ALTi-V or VS 805-2-CE-V or B-16-T4	2"1/2	1320	600	717	130	640
N-ALTi-V or VS 806-2-CE-V or B-16-T4	2"1/2	1320	600	717	130	640
N-ALTi-V 807-2-CE-V or B-16-T4	2"1/2	1320	600	717	130	640
N-ALTi-V 808-2-CE-V or B-16-T4	2"1/2	1320	600	717	130	640
N-ALTi-V 810-2-CE-V or B-16-T4	2"1/2	1450	600	717	130	640
N-ALTi-V 811-2-CE-V or B-16-T4	2"1/2	1450	600	717	130	640
N-ALTi-V 812-2-CE-V or B-16-T4	2"1/2	1450	600	717	130	640

TYPE	Ø	H	L	P	H1	P1
	Pipes	mm	mm	mm	mm	mm
3 PUMPS						
N-Alti VS 802-3-CE-V or B-16-T4	2"1/2	1150	900	717	130	640
N-ALTi-V or VS 803-3-CE-V or B-16-T4	2"1/2	1150	900	717	130	640
N-ALTi-V or VS 804-3-CE-V or B-16-T4	2"1/2	1150	900	717	130	640
N-ALTi-V or VS 805-3-CE-V or B-16-T4	2"1/2	1320	900	717	130	640
N-ALTi-V or VS 806-3-CE-V or B-16-T4	2"1/2	1320	900	717	130	640
N-ALTi-V 807-3-CE-V or B-16-T4	2"1/2	1320	900	717	130	640
N-ALTi-V 808-3-CE-V or B-16-T4	2"1/2	1320	900	717	130	640
N-ALTi-V 810-3-CE-V or B-16-T4	2"1/2	1450	900	717	130	640
N-ALTi-V 811-3-CE-V or B-16-T4	2"1/2	1450	900	717	130	640
N-ALTi-V 812-3-CE-V or B-16-T4	2"1/2	1450	900	717	130	640

ELECTRICAL SPECIFICATIONS AND SIZES - N-ALTI-V OR VS SERIE - CA VERSION

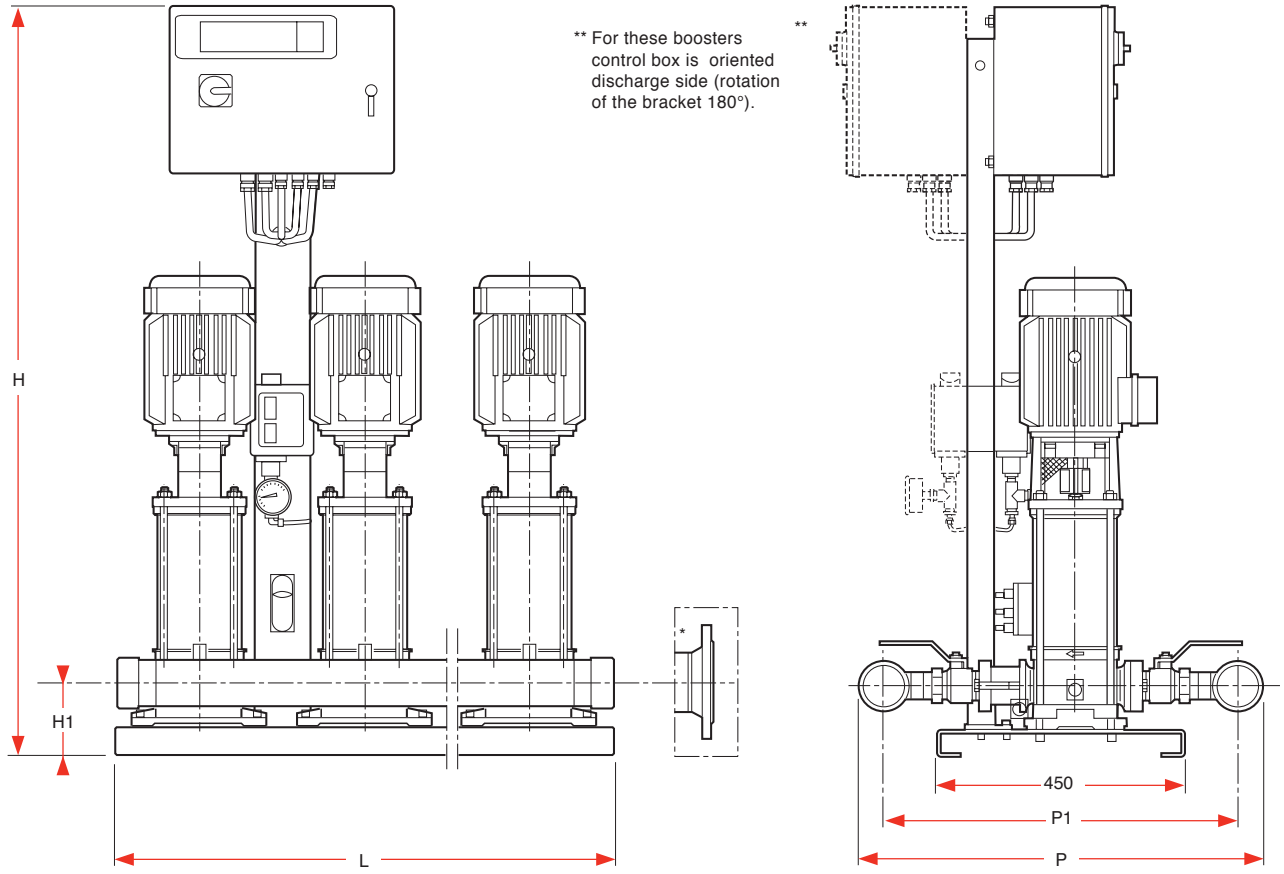

TYPE	Ø	H	L	P	H1	P1
	Pipes	mm	mm	mm	mm	mm
2 PUMPS						
N-Alti VS 802-2-CA-V or B-16-T4	2”1/2	1150	600	717	130	640
N-ALTi-V or VS 803-2-CA-V or B-16-T4	2”1/2	1150	600	717	130	640
N-ALTi-V or VS 804-2-CA-V or B-16-T4	2”1/2	1150	600	717	130	640
N-ALTi-V or VS 805-2-CA-V or B-16-T4	2”1/2	1320	600	717	130	640
N-ALTi-V or VS 806-2-CA-V or B-16-T4	2”1/2	1320	600	717	130	640
N-ALTi-V 807-2-CA-V or B-16-T4	2”1/2	1320	600	717	130	640
N-ALTi-V 808-2-CA-V or B-16-T4	2”1/2	1320	600	717	130	640
N-ALTi-V 810-2-CA-V or B-16-T4	2”1/2	1470	600	717	130	640
N-ALTi-V 811-2-CA-V or B-16-T4	2”1/2	1470	600	717	130	640
N-ALTi-V 812-2-CA-V or B-16-T4	2”1/2	1470	600	717	130	640

TYPE	Ø	H	L	P	H1	P1
	Pipes	mm	mm	mm	mm	mm
3 PUMPS						
N-Alti VS 802-3-CA-V or B-16-T4	2”1/2	1150	900	717	130	640
N-ALTi-V or VS 803-3-CA-V or B-16-T4	2”1/2	1150	900	717	130	640
N-ALTi-V or VS 804-3-CA-V or B-16-T4	2”1/2	1150	900	717	130	640
N-ALTi-V or VS 805-3-CA-V or B-16-T4	2”1/2	1320	900	717	130	640
N-ALTi-V or VS 806-3-CA-V or B-16-T4	2”1/2	1320	900	717	130	640
N-ALTi-V 807-3-CA-V or B-16-T4	2”1/2	1320	900	717	130	640
N-ALTi-V 808-3-CA-V or B-16-T4	2”1/2	1320	900	717	130	640
N-ALTi-V 810-3-CA-V or B-16-T4	2”1/2	1470	900	717	130	640
N-ALTi-V 811-3-CA-V or B-16-T4	2”1/2	1470	900	717	130	640
N-ALTi-V 812-3-CA-V or B-16-T4	2”1/2	1470	900	717	130	640

HYDROPLUS

ELECTRICAL SPECIFICATIONS AND SIZES - N-ALTI V OR VS SERIE - CCFC VERSION

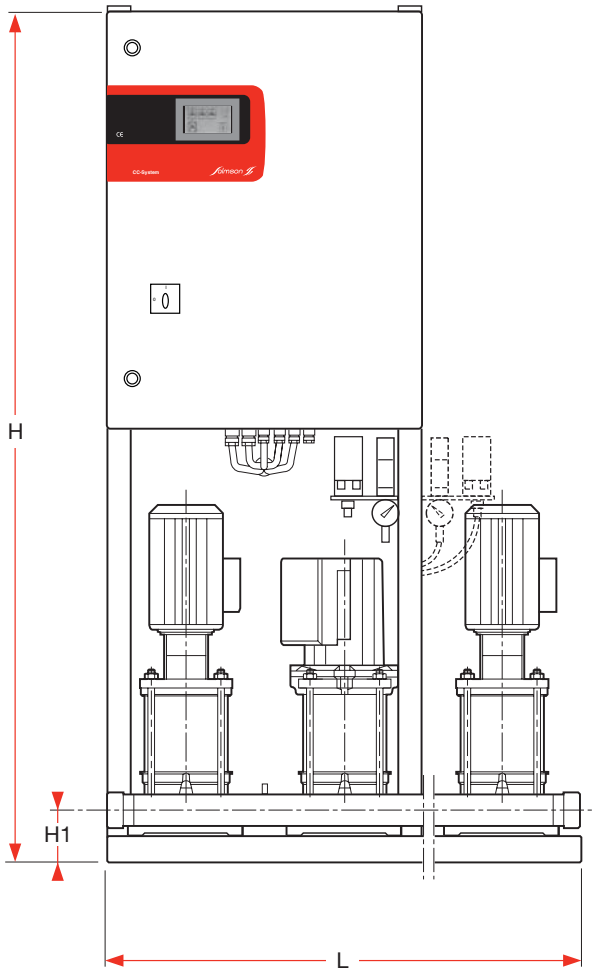

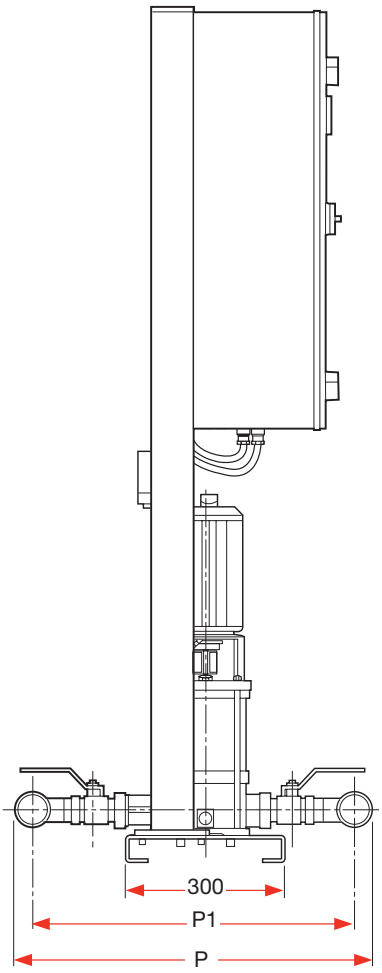

TYPE	Ø	H	L	P	H1	P1
	Pipes	mm	mm	mm	mm	mm
2 PUMPS						
N-ALTi-V or VS 203-2-CCFC-V or B-16-T4	2”	1630	600	610	100	550
N-ALTi-V or VS 204-2-CCFC-V or B-16-T4	2”	1630	600	610	100	550
N-ALTi-V or VS 205-2-CCFC-V or B-16-T4	2”	1630	600	610	100	550
N-ALTi-V or VS 206-2-CCFC-V or B-16-T4	2”	1630	600	610	100	550
N-ALTi-V or VS 207-2-CCFC-V or B-16-T4	2”	1630	600	610	100	550
N-ALTi-V or VS 208-2-CCFC-V or B-16-T4	2”	1630	600	610	100	550
N-Alti VS 209-2-CCFC-V or B-16-T4	2”	1830	600	610	100	550
N-ALTi-V 210-2-CCFC-V or B-16-T4	2”	1830	600	610	100	550
N-ALTi-V 212-2-CCFC-V or B-16-T4	2”	1830	600	610	100	550
N-ALTi-V or VS 403-2-CCFC-V or B-16-T4	2”	1630	600	610	100	550
N-ALTi-V or VS 404-2-CCFC-V or B-16-T4	2”	1630	600	610	100	550
N-ALTi-V or VS 405-2-CCFC-V or B-16-T4	2”	1630	600	610	100	550
N-ALTi-V or VS 406-2-CCFC-V or B-16-T4	2”	1630	600	610	100	550
N-ALTi-V or VS 407-2-CCFC-V or B-16-T4	2”	1630	600	610	100	550
N-ALTi-V or VS 408-2-CCFC-V or B-16-T4	2”	1630	600	610	100	550
N-ALTi-V or VS 410-2-CCFC-V or B-16-T4	2”	1830	600	610	100	550
N-ALTi-V 412-2-CCFC-V or B-16-T4	2”	1830	600	610	100	550

TYPE	Ø	H	L	P	H1	P1
	Pipes	mm	mm	mm	mm	mm
3 PUMPS						
N-ALTi-V or VS 203-3-CCFC-V or B-16-T4	2”	1630	600	610	100	550
N-ALTi-V or VS 204-3-CCFC-V or B-16-T4	2”	1630	600	610	100	550
N-ALTi-V or VS 205-3-CCFC-V or B-16-T4	2”	1630	600	610	100	550
N-ALTi-V or VS 206-3-CCFC-V or B-16-T4	2”	1630	600	610	100	550
N-ALTi-V or VS 207-3-CCFC-V or B-16-T4	2”	1630	600	610	100	550
N-ALTi-V or VS 208-3-CCFC-V or B-16-T4	2”	1630	600	610	100	550
N-Alti VS 209-3-CCFC-V or B-16-T4	2”	1830	600	610	100	550
N-ALTi-V 210-3-CCFC-V or B-16-T4	2”	1830	600	610	100	550
N-ALTi-V 212-3-CCFC-V or B-16-T4	2”	1830	600	610	100	550
N-ALTi-V or VS 403-3-CCFC-V or B-16-T4	2”	1630	600	610	100	550
N-ALTi-V or VS 404-3-CCFC-V or B-16-T4	2”	1630	600	610	100	550
N-ALTi-V or VS 405-3-CCFC-V or B-16-T4	2”	1630	600	610	100	550
N-ALTi-V or VS 406-3-CCFC-V or B-16-T4	2”	1630	600	610	100	550
N-ALTi-V or VS 407-3-CCFC-V or B-16-T4	2”	1630	600	610	100	550
N-ALTi-V or VS 408-3-CCFC-V or B-16-T4	2”	1630	600	610	100	550
N-ALTi-V or VS 410-3-CCFC-V or B-16-T4	2”	1830	600	610	100	550
N-ALTi-V 412-3-CCFC-V or B-16-T4	2”	1830	600	610	100	550

ELECTRICAL SPECIFICATIONS AND SIZES - N-ALTI V OR VS SERIE - CCFC VERSION

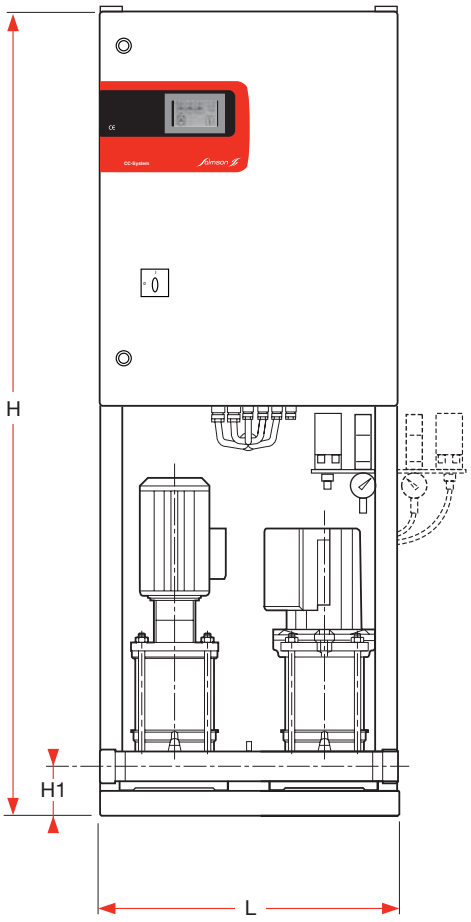

** For these boosters control box is oriented discharge side (rotation of the bracket 180°)..

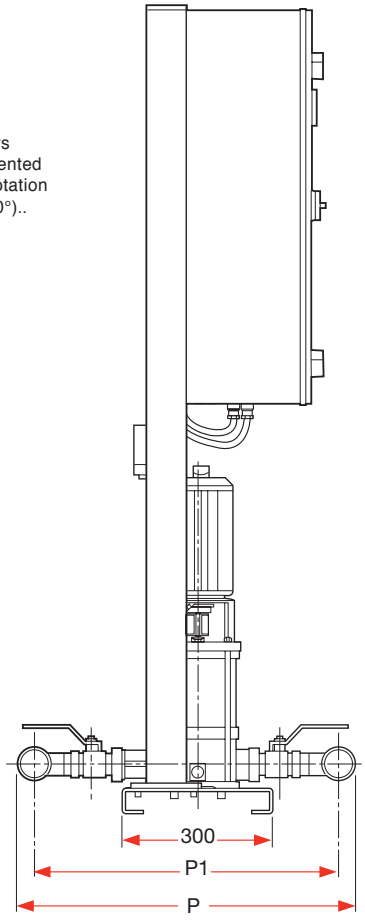

TYPE	Ø	H	L	P	H1	P1
	Pipes	mm	mm	mm	mm	mm
2 PUMPS						
N-ALTi-V or VS 803-2-CCFC-V or B-16-T4	2"1/2	1630	600	717	130	640
N-ALTi-V or VS 804-2-CCFC-V or B-16-T4	2"1/2	1630	600	717	130	640
N-ALTi-V or VS 805-2-CCFC-V or B-16-T4	2"1/2	1630	600	717	130	640
N-ALTi-V or VS 806-2-CCFC-V or B-16-T4	2"1/2	1830	600	717	130	640
N-ALTi-V 807-2-CCFC-V or B-16-T4	2"1/2	1830	600	717	130	640
N-ALTi-V 808-2-CCFC-V or B-16-T4	2"1/2	1830	600	717	130	640
N-ALTi-V 810-2-CCFC-V or B-16-T4	2"1/2	1830	600	717	130	640
N-ALTi-V 811-2-CCFC-V or B-16-T4	2"1/2	1630**	600	717	130	640
N-ALTi-V 812-2-CCFC-V or B-16-T4	2"1/2	1630**	600	717	130	640

TYPE	Ø	H	L	P	H1	P1
	Pipes	mm	mm	mm	mm	mm
3 PUMPS						
N-ALTi-V or VS 803-3-CCFC-V or B-16-T4	2"1/2	1630	900	717	130	640
N-ALTi-V or VS 804-3-CCFC-V or B-16-T4	2"1/2	1630	900	717	130	640
N-ALTi-V or VS 805-3-CCFC-V or B-16-T4	2"1/2	1630	900	717	130	640
N-ALTi-V or VS 806-3-CCFC-V or B-16-T4	2"1/2	1830	900	717	130	640
N-ALTi-V 807-3-CCFC-V or B-16-T4	2"1/2	1830	900	717	130	640
N-ALTi-V 808-3-CCFC-V or B-16-T4	2"1/2	1830	900	717	130	640
N-ALTi-V 810-3-CCFC-V or B-16-T4	2"1/2	1830	900	717	130	640
N-ALTi-V 811-3-CCFC-V or B-16-T4	2"1/2	1630**	900	717	130	640
N-ALTi-V 812-3-CCFC-V or B-16-T4	2"1/2	1630**	900	717	130	640

HYDROPLUS

NOTES

FEATURES

a) Assembly

– On flat surface or on concrete slab and fixed with an anchor bolt.
– Intake and outlet pipes can be connected either on the right or the left

b) Packaging

On pallet

RECOMMENDED ACCESSORIES

- Water supply by-pass, for direct connection to the mains water supply.
- Vibration damping rubber sleeves
- Back flange kit, sold in pairs.
- Isolating valves.



• Isolating valves

• Vibration damping rubber sleeves





• Vibration damping rubber sleeves

RANGE OF APPLICATION

Flows up to:	**100 m³/h**
Manometric head up to:	**130 m CE**
Maximum working pressure:	**25 bar**
Maximum water temperature:	**HE/VE 70°C**
	VSE 50°C
Ambient temperature:	**40°C**

HYDROPLUS-E

BOOSTER PUMPS
Pumps with built-in Electronic Variation Speed
Small institutions and industrial use
2 poles - 50/60 Hz

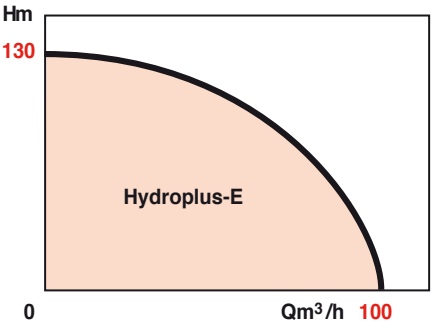

APPLICATIONS

Creating and maintaining the pressure level of water supply systems with low or nonexistent pressure for:
- housing complexes, offices,
- private homes,
- hotels, hospitals, clinics,
- shopping centres, shops,
- primary schools, secondary schools, universities, army barracks,
- industrial and agricultural buildings,
- irrigation, watering…

ADVANTAGES

- **Energy-saving and quiet running by permanently adjusting the speed of rotation of the pumps according to the demand for pressure.**
- **Compact modules because the frequency changers are built into the pumps.**
- **Smooth running, with fewer jolts and less water hammer.**
- **Choice of horizontal or vertical multistage pumps with built-in EVS.**
- **A pleasure to install and use, with easy installation and operation of the module.**
- **Pipes in stainless steel, long-lasting and secure against corrosion.**
- **In the VSE version, very quiet level of operation, because of the wet-running motor technology.**

EVS

Certified ACS EVS



• N-ALTi-VE-805-3-T4-2G

• N-ALTi-VSE-805-2-T4-2G



EVS

• N-ALTi-HE-406-2-T4-2G

Certified ACS EVS



HYDROPLUS-E

DESIGN

Compact booster pumps, pre-wired, ready to be installed. The booster pump can be supplied with water from the mains (Version V) or from a storage tank (Version B).
Booster pumps type N-ALTi-HE and N-ALTi-VE can operate under load or as suction pumps (maximum head 1 m).
Booster pumps type N-ALTi-VSE must operate under load (minimum head 1 m).

• Hydraulic part

Operating pressure:

N-ALTi-HE	10 bar
N-ALTi-VE	16 & 25 bar
N-ALTi-VSE	16 bar

Ø of pipes:	2 pumps	3 pumps
N-ALTi 200	2''	2''
N-ALTi 400	2''	2''
N-ALTi 800	3''	3''
N-ALTi 1600	3''	ND 100

• Electrical part

Voltage:	3~ 400V ±10% (without neutral)
Frequency:	50/60 Hz
Protection class:	IP 54
CEM compliant:	EN 61000-6 1 et 3 EN 61000-6 2 et 4

BASIC CONSTRUCTION

Main components	Material
Pumps	Stainless steel 304
Pipes	2/4/8/16 S.steel 316 Ti
	18/36/60 S.steel 316 Ti

GENERAL OPERATING PRINCIPLE

1 - The outlet pressure of the booster unit adjusts to match the pressure required, by varying the speed in each pump:
- If the system pressure falls below the set pressure: pump no.1 starts and adjusts its speed to the consumption and the set pressure.
- If the demand increases: pump no.1 accelerates to 95% of its maximum and pump no.2 then starts at minimum frequency in order to be immediately operational if required. This is the anticipation principle.
- If consumption increases, pump no.1 reaches 100% of its speed and pump no.2 accelerates according to need.
- If the consumption stabilises and pump no.1 has not reached its maximum speed within 15 seconds, pump no.2 stops.

The same principle of anticipation applies to a 3-pump booster unit (if demand rises, the second pump reaches 95% of its maximum in its turn,and pump no.3 starts up...).
This gives better regulation than a conventional system, or one with built-in variation of speed, by anticipating the need.

2 - It automatically detects if a pump is unavailable and intelligently handles the fault:
- If the pump detects a minor fault (see the management table of the built-in Electronic Variation Speed [EVS]), the booster pump takes this parameter on board and restarts the pump if the automatic diagnosis allows it to.

3 - The installation is protected by setting a maximum acceptable pressure for the circuit:
If this pressure is exceeded, the booster pump stops and starts again once the pressure in the system falls below the pressure set.

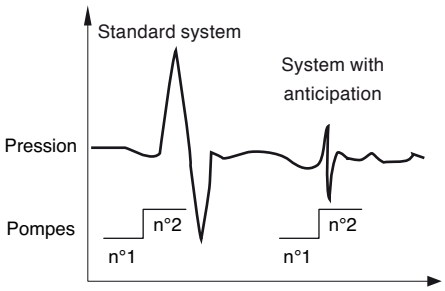

IDENTIFICATION

N - ALTi - HE
N - ELiNOX - VE - 803 - 11 - 2 - 16 - T2 - 2G
- VSE - 3 - 25 - T4

N : New
Booster pump code
Type of pump
Size of pumps
7.5 or 11: motor power for N-ALTi-VE 3603 only
Number of pumps
Admissible pressure: 16 or 25 bar
Voltage of power supply: - T4 = Tree-phase 400 V
2G: Second Generation from 1.1 à 4 kW
The N-ELiNOX-V/H range are booster pumps entirely in stainless steel 316.

FUNCTIONS

- **Operates in cascade** with automatic control of the pressure by the principle of anticipation.

- **Optimises the operating time of the pumps:**
- switches over the starting order of the pumps,
- automatically switches over the pump in operation after 6 hours of actual running.

- **Detects low water** and automatically restarts when water returns to the intake (Low-water detector: essential accessory).

- **Maintenance diagnosis** based on the intelligent handling of faults on the pump (Record of faults available).

- **A maximum threshold of overpressure is set** to protect the installation.

- **The backup pump principle** can be included.

- **Digital remote control functions:**
- report on general operation,
- report on general fault,
- report of operation pump by pump*
- report of faults pump by pump*
- report of low water detection * (*option)

- **Analogue function** in the form of a 0-10V signal, with information on the pressure of the system.

DESCRIPTION OF THE BOOSTER PUMP

• N-ALTi-HE

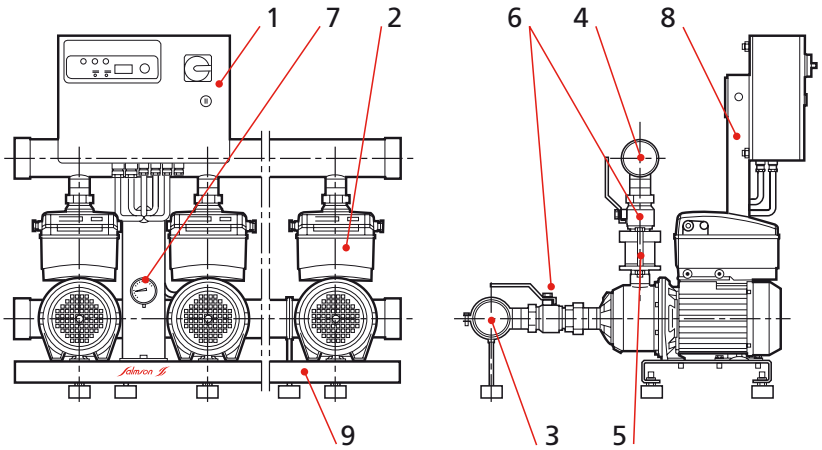

• N-ALTi-VE / N-ALTi-VSE

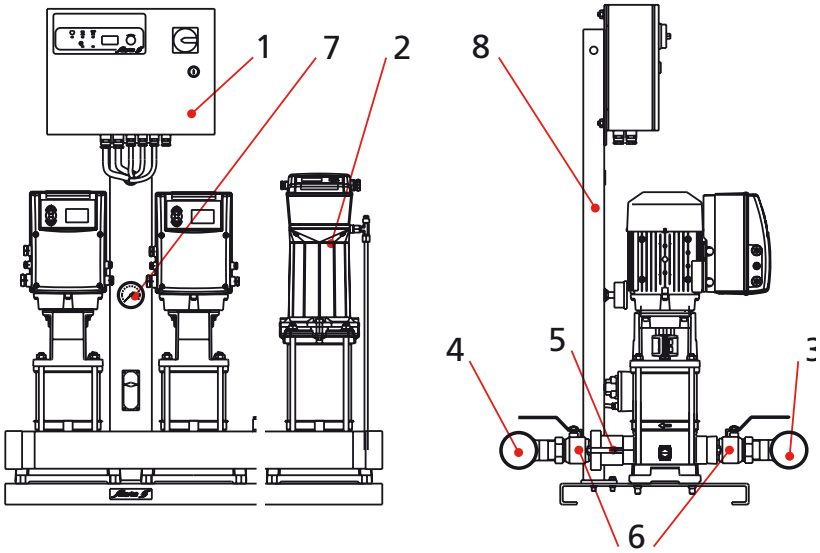

1 - Control box
2 - Pumps (MULTi-HE, MULTi-VE, MULTi-VSE)
3 - Intake pipe
4 - Outlet pipe
5 - Non-return valve
6 - Shut-off valves
7 - Pressure gauge
8 - Pressure transmitter
9 - Vibration damper pads (for N-ALTi-HE)

• **Safety and reliability of the system**

- If a frequency changer fails, the two or three* remaining frequency changers control the variation of speed.

- Manual override possible if there is a fault of the microcontroller, by defining a fixed speed for the pumps.

- Remote on/off for the booster unit.

- Option: board for separate Pumps on/off and Low Water reports.

* four-pumps booster unit

DESCRIPTION OF THE FRONT OF THE CONTROL BOX



1 - External isolating safety switch to turn the box on and off

2 - Rotating knob to select values

3 - Liquid crystal display of parameters

4 - LED display of the booster pump's operation/faults :
- Diode On/off of the box
- Diode warning of the low water function
- Red diode for 'pressure too high' function
- Green diode showing pumps in operation
- Diode warning of fault on pumps

HYDROPLUS-E

DISPLAYS

• Control panel on the ALTi-E switch box



Description of switch box operation

Booster pump operation	Booster pump behaviour	Displays
Booster pump on	Ready to start	Green LED constantly on
Booster pump in operation	At least one pump working (in manual or automatic mode)	Green LED constantly on
Fault of pressure sensor	Diagnosis from analysis of the pump	Flashing green LED
One pump unavailable	Diagnosis from analysis of the pump	Red LED constantly on
Detection of low water level	Dead halt until there is water at the intake	Red LED constantly on
	Automatic restart when water is again detected, but previous fault still indicated	Flashing red LED
Over pressure detected	Complete stoppage	Red LED on
	Automatic restart if the pressure falls below of the set pressure, but previous fault still indicated	Flashing red LED
Digital display	- Pressure of control - Set pressure - Operating modes menu	
Red knob	Change control settings: - Delay time - PDI (Proportional-differential-integral calculation).	

COMPONENTS

	N-ALTi-HE		N-ALTi-VE		N-ALTi-VSE	
Components	**2 pumps**	**3 pumps**	**2 pumps**	**3 pumps**	**2 pumps**	**3 pumps**
MULTi-HE Pumps	2	3	–	–	–	–
MULTi-VE Pumps	–	–	2	3	–	–
MULTi-VSE Pumps	–	–	–	–	2	3
Valves	4	6	4	6	4	6
Non-return valves	2	3	2	3	2	3
Pipes	2	2	2	2	2	2
Pressure transmitter	1	1	1	1	1	1
Pressure gauge	1	1	1	1	1	1
Control box	1	1	1	1	1	1
Vibration damper pads	4	4	–	–	–	–
Base	1	1	1	1	1	1

ESSENTIAL ACCESSORIES DEPENDING ON THE SOURCE OF THE WATER SUPPLY

Protection against running dry	Pressure switch (for version V)	1	1	1	1	1	1
	Float (for version B)	1	1	1	1	1	1
Bladder tank on output from booster pump		1	1	1	1	1	1

STANDARDS AND SPECIFICATIONS

- Directive on Machinery 2006/42/CE.

- Electromagnetic Compatibility Directive 2004/108/EC.

- Low Voltage Directive 2006/95/CE

- IEC/CEI 60364 (NFC 15-100) (Electrical Installations).).

- ACS Certification.

- EN 809-Pumps and pump units for liquids.

- EN 61000-6-1 et EN 61000-6-3 or EN 61000-6-2 and EN 61000-6-4 (Immunity / Interference).

- EN 60204-1 (Electrical safety of machinery), EN 12100-2 (Mechanical safety of machinery), EN 60439-1 (Switchgear and control gear assemblies).

HYDROPLUS-E

HYDRAULIC PERFORMANCE - N-ALTI-HE SERIE

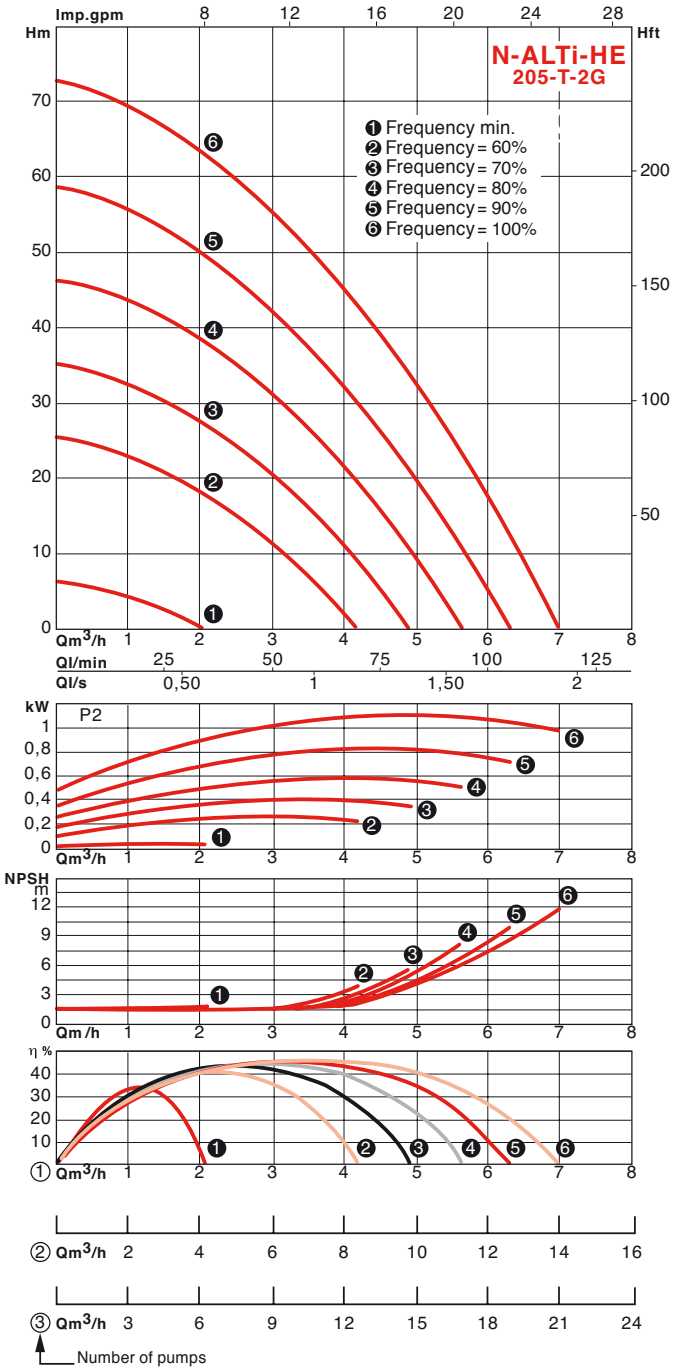

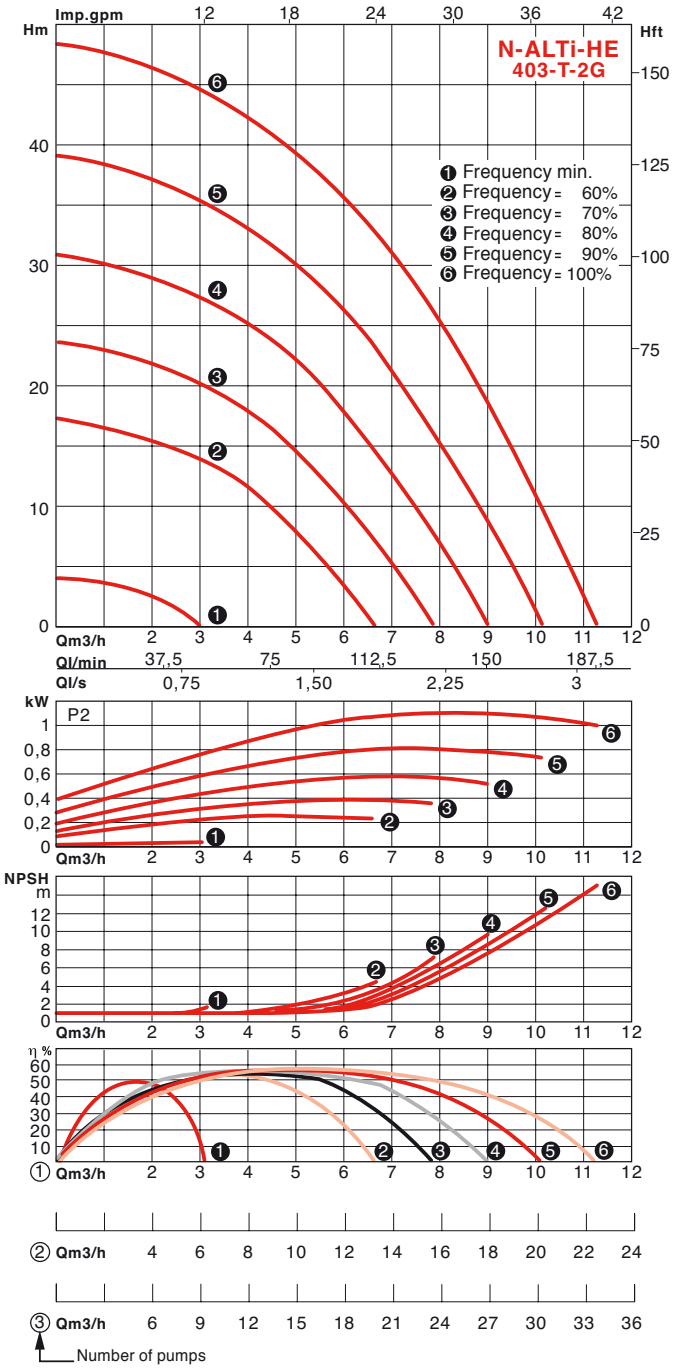

HYDRAULIC PERFORMANCE - N-ALTI-HE SERIE

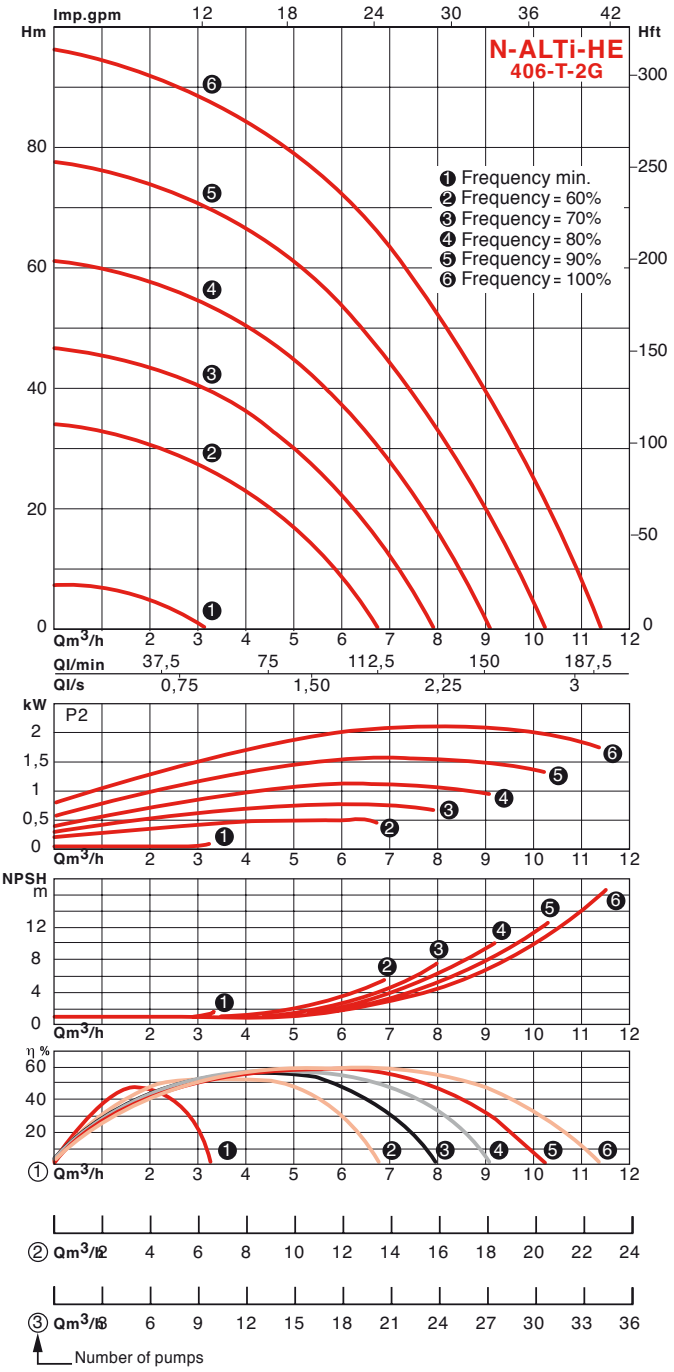

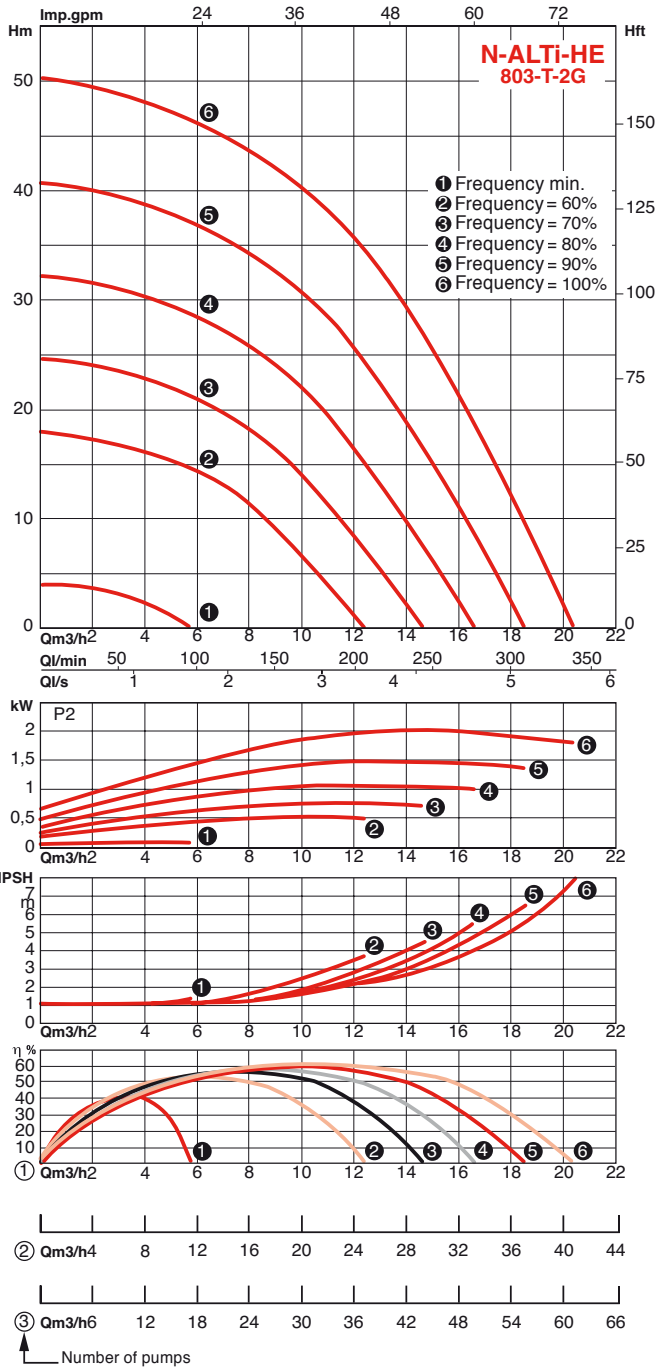

HYDROPLUS-E

HYDRAULIC PERFORMANCE - N-ALTI-HE SERIE

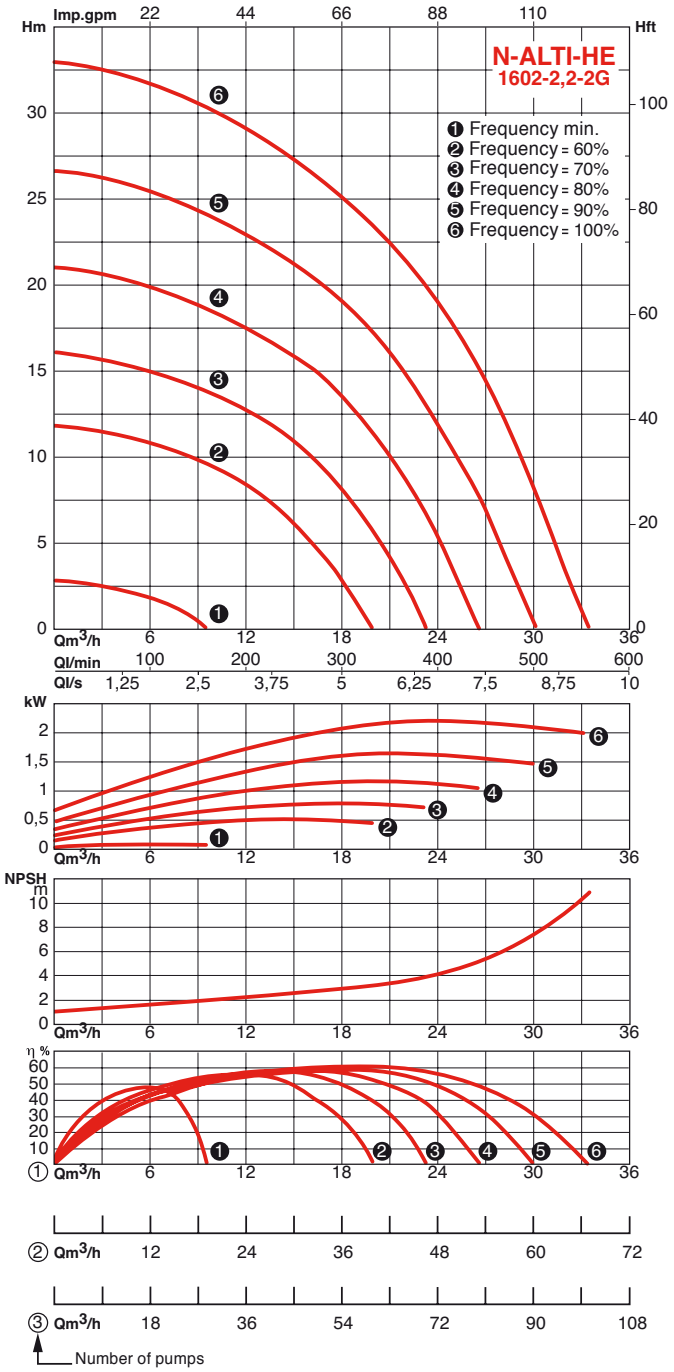

HYDRAULIC PERFORMANCE - N-ALTI-VE SERIE

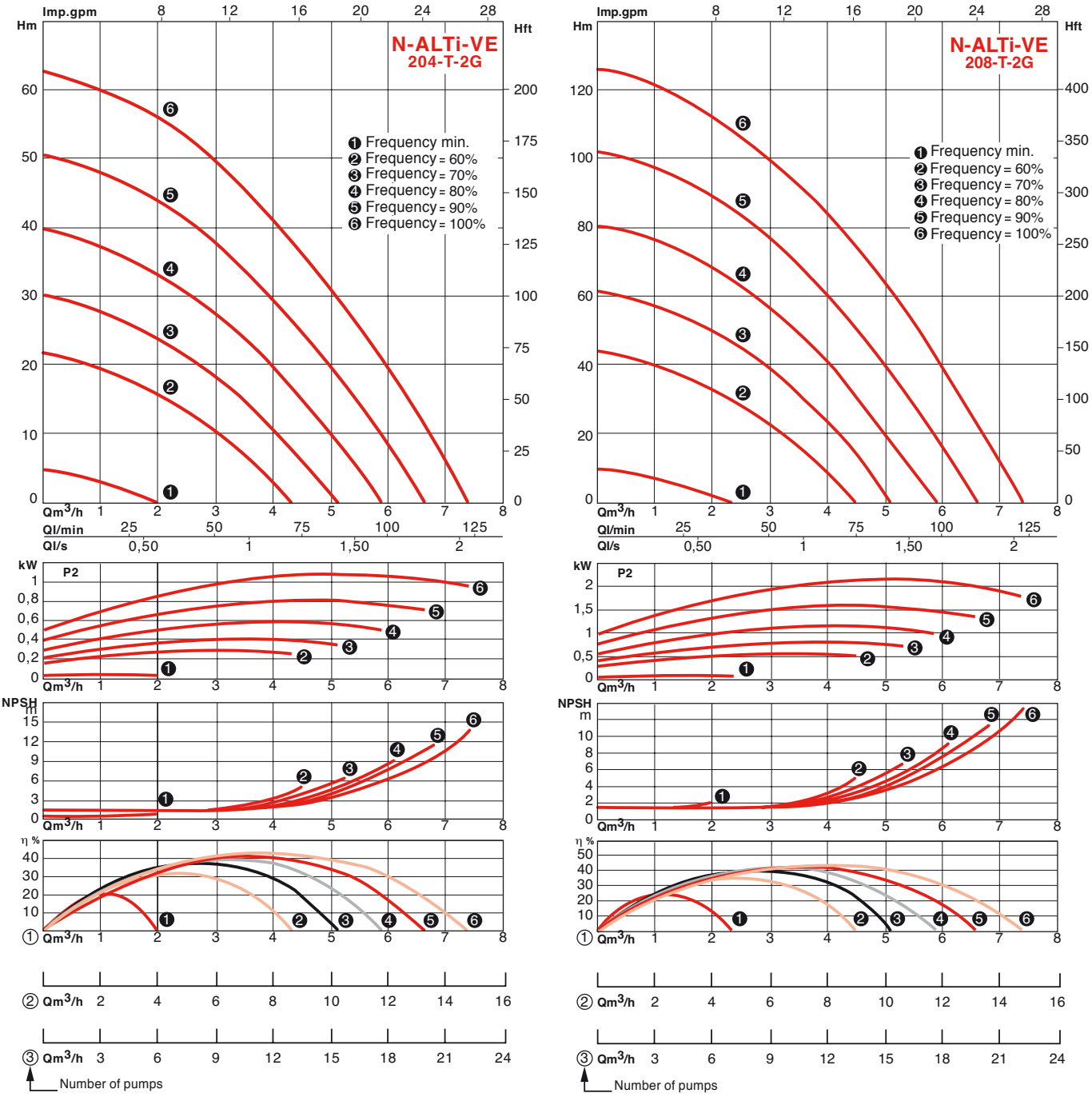

HYDROPLUS-E

HYDRAULIC PERFORMANCE - N-ALTI-VE SERIE

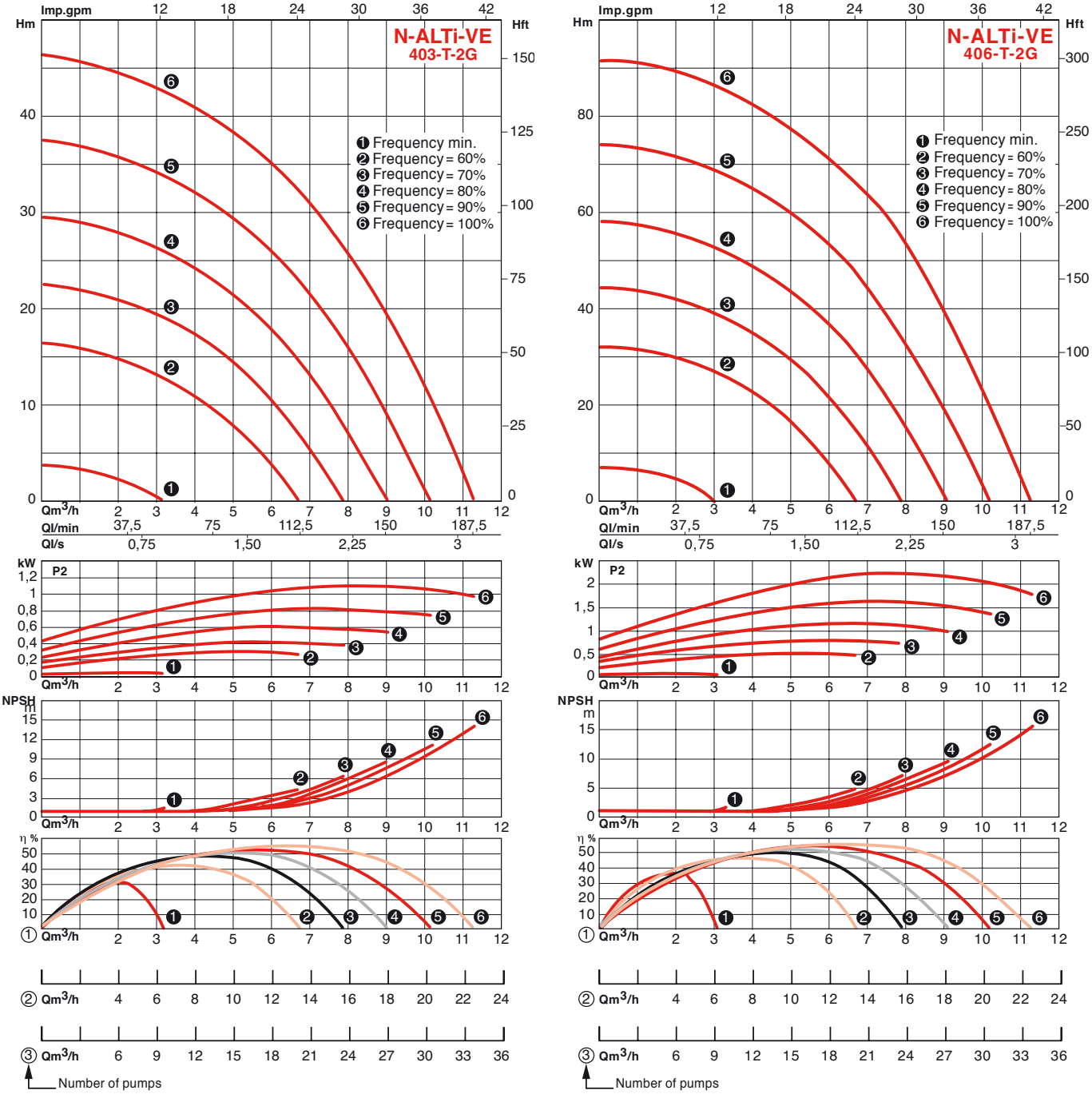

HYDRAULIC PERFORMANCE - N-ALTI-VE SERIE

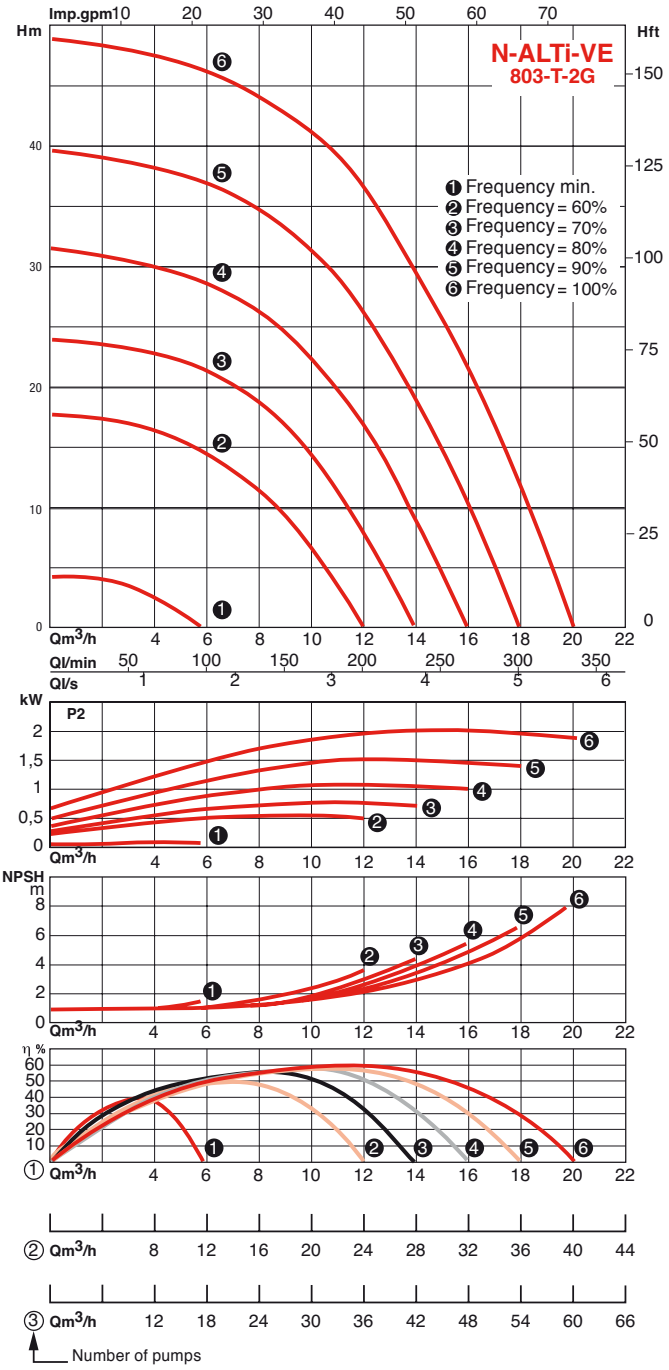

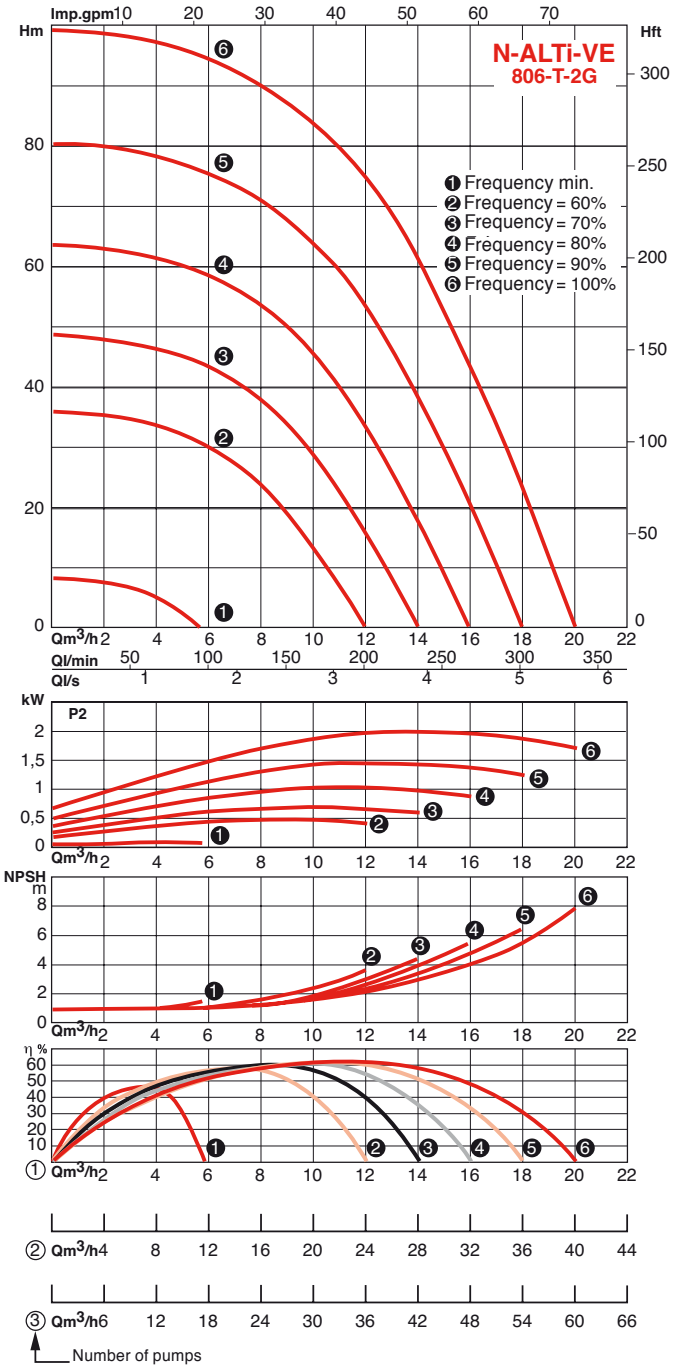

HYDROPLUS-E

HYDRAULIC PERFORMANCE - N-ALTI-VE SERIE

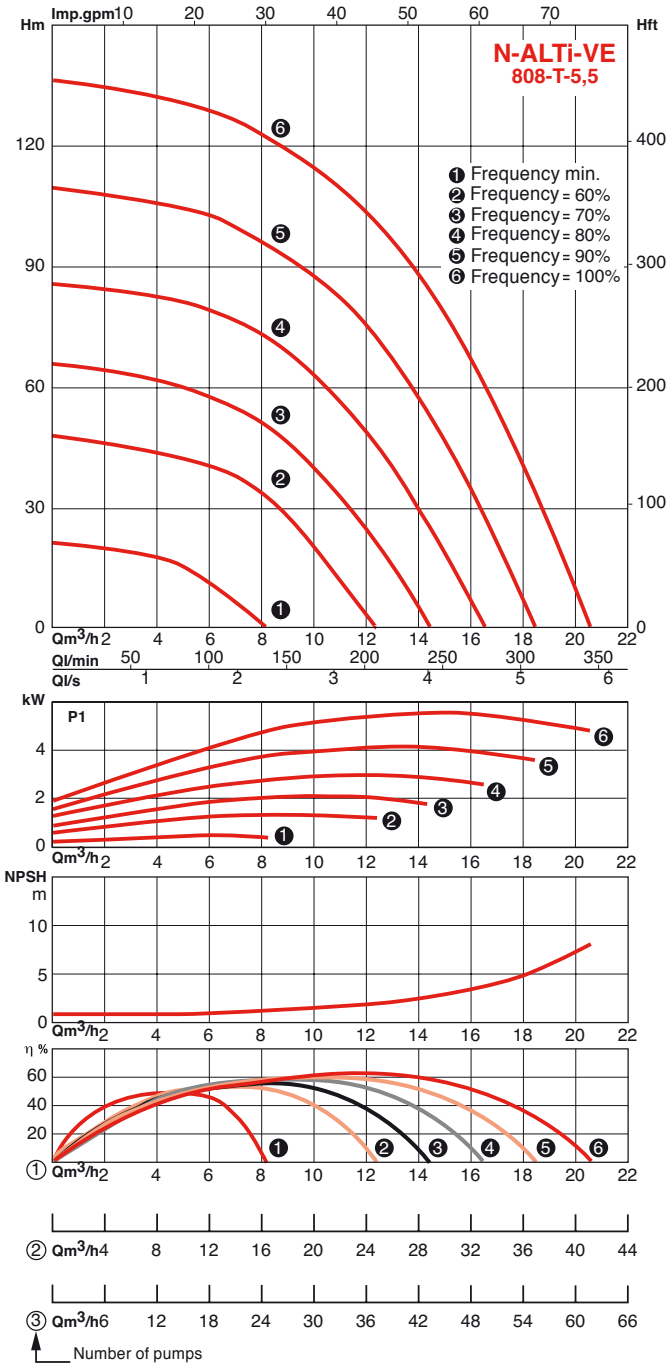

N-ALTI-VSE SERIE

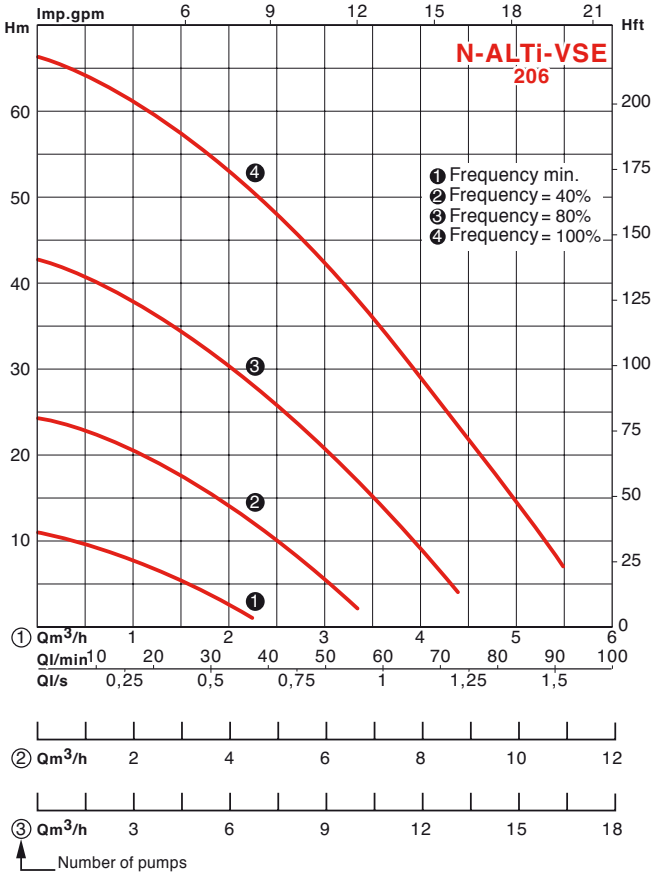

N.B.: ALTI-VSE booster units (with wet running pumps) cannot be installed as suction pumps. Minimum head = 1 mCE.

HYDRAULIC PERFORMANCE - N-ALTI-VSE SERIE

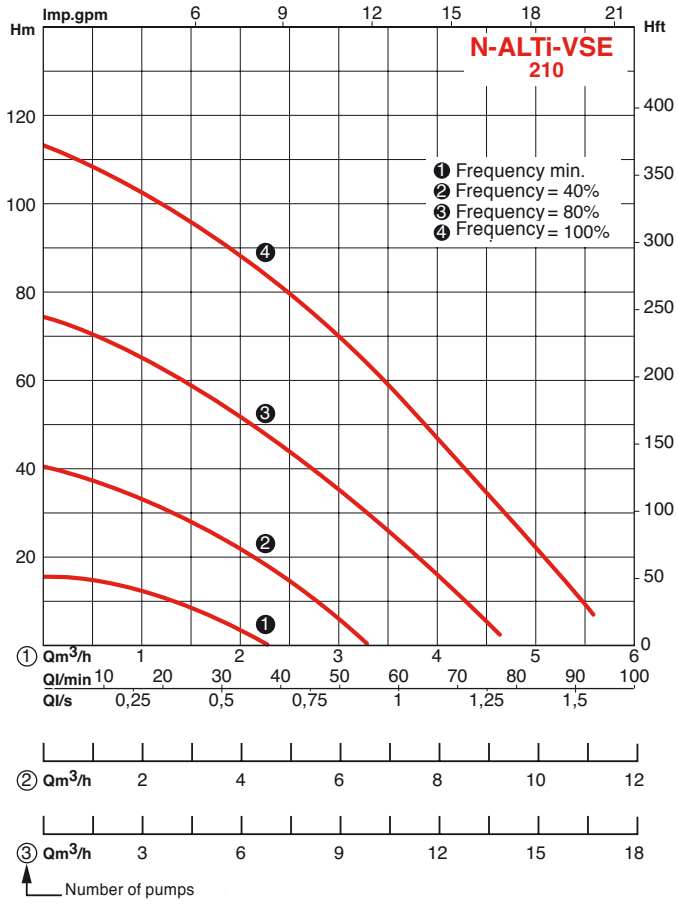

N.B.: ALTI-VSE booster units (with wet running pumps) cannot be installed as suction pumps. Minimum head = 1 mCE.

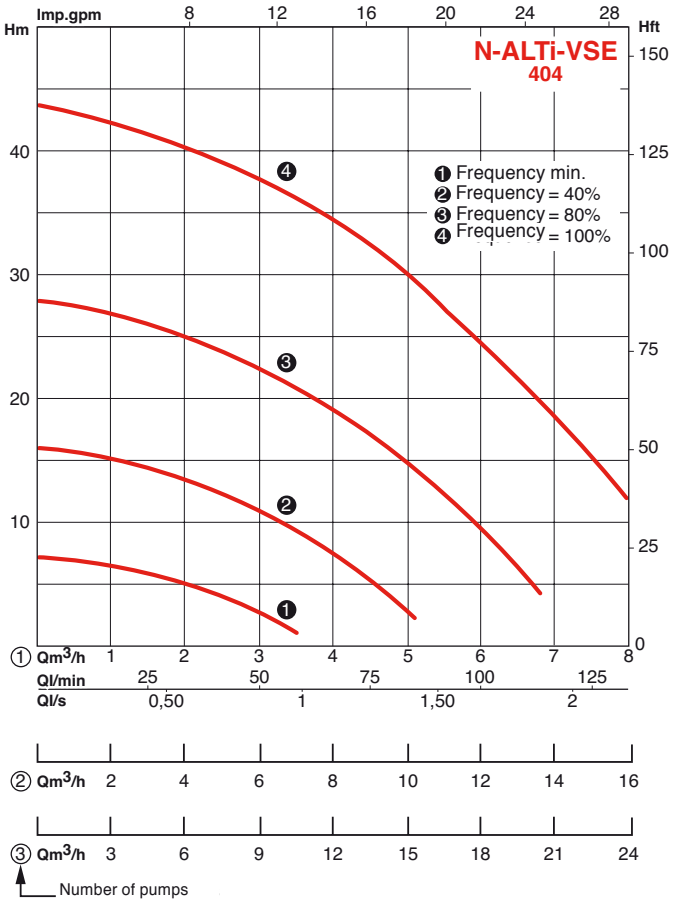

N.B.: ALTI-VSE booster units (with wet running pumps) cannot be installed as suction pumps. Minimum head = 1 mCE.

HYDROPLUS-E

HYDRAULIC PERFORMANCE - N-ALTI-VSE SERIE

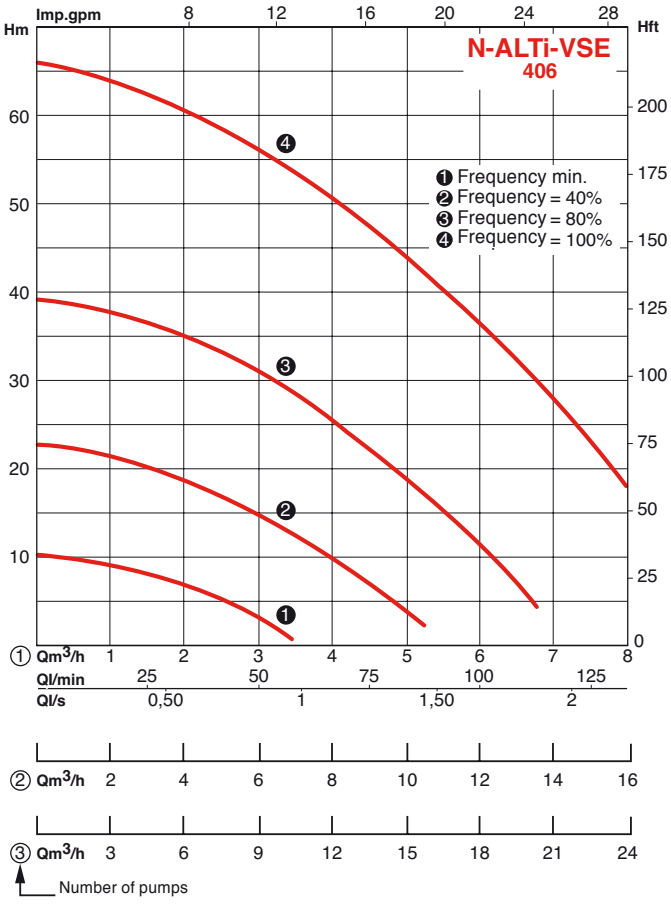

N.B.: ALTI-VSE booster units (with wet running pumps) cannot be installed as suction pumps. Minimum head = 1 mCE.

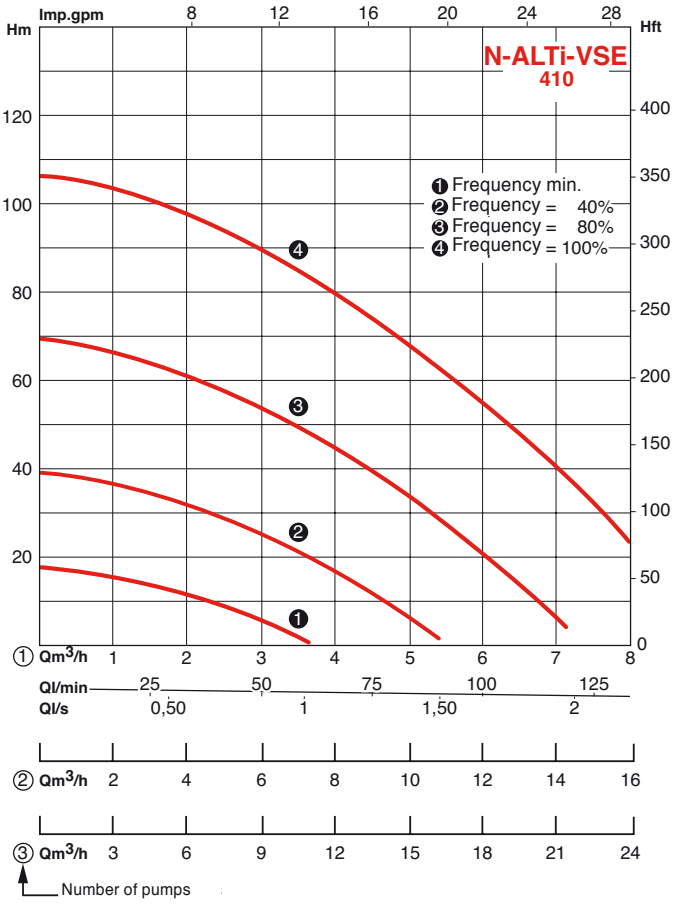

N.B.: ALTI-VSE booster units (with wet running pumps) cannot be installed as suction pumps. Minimum head = 1 mCE

HYDRAULIC PERFORMANCE - N-ALTI-VSE SERIE

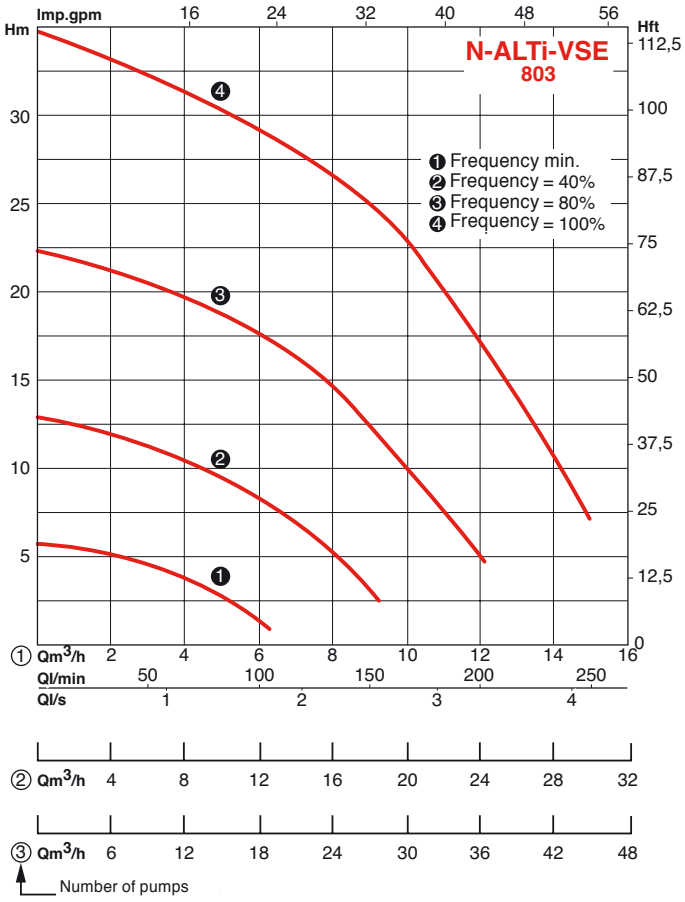

N.B.: ALTI-VSE booster units (with wet running pumps) cannot be installed as suction pumps. Minimum head = 1 mCE.

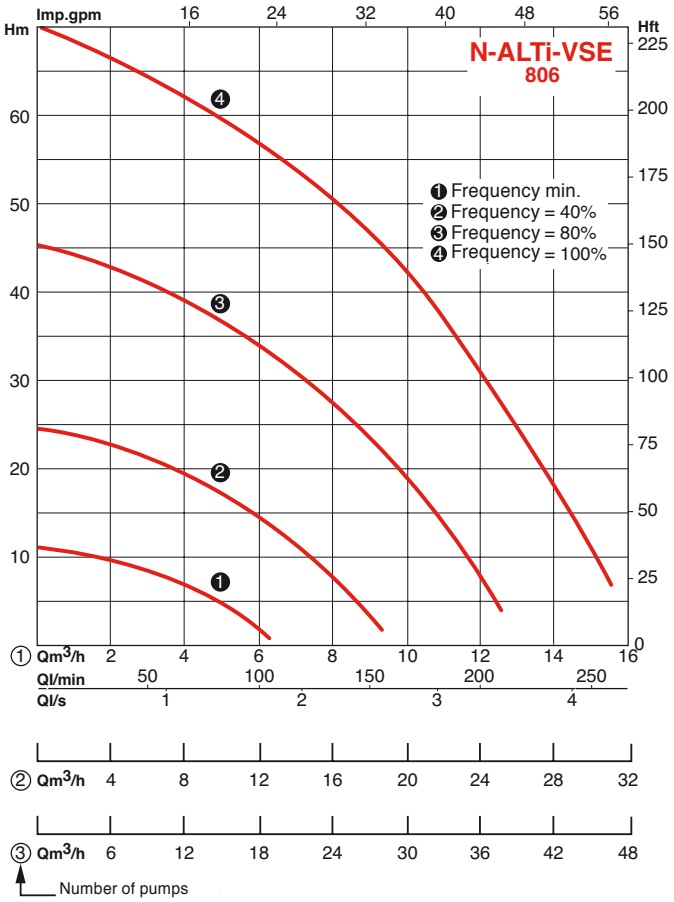

N.B.: ALTI-VSE booster units (with wet running pumps) cannot be installed as suction pumps. Minimum head = 1 mCE.

HYDROPLUS-E

SIZES AND ELECTRICAL CHARACTERISTICS - N-ALTI-HE SERIE

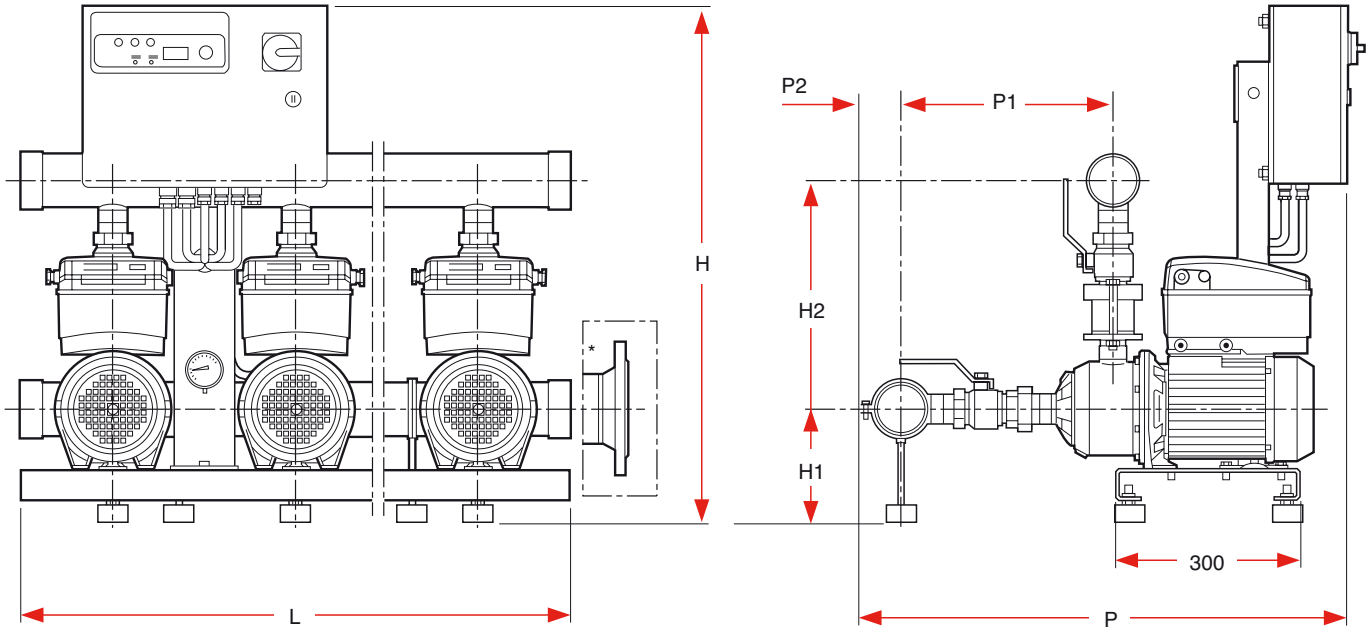

N-ALTi-HE (2,4,8,16)

Name of the booster pump	Type of pump	Freq.	T	In	Freq.	T	IN	Freq.	T	In	P2	Ø	PN	H	L	P	H1	H2	P1	P2
		Hz	V	A	Hz	V	A	Hz	V	A	kW	Coll.	bar	mm	mm	mm	mm	mm	mm	mm
N-ALTi-HE-205-2-10-T4-2G	2xMULTi-HE 205-2G	50	3x400	6,6	60	3x380	6,8	60	3x440	6,4	2x1,1	2”	10	850	600	760	178	344	310	55
N-ALTi-HE-403-2-10-T4-2G	2xMULTi-HE 403-2G	50	3x400	6,6	60	3x380	6,8	60	3x440	6,4	2x1,1	2”	10	850	600	760	178	344	310	55
N-ALTi-HE-406-2-10-T4-2G	2xMULTi-HE 406-2G	50	3x400	11,2	60	3x380	11,4	60	3x440	11	2x2,2	2”	10	850	600	760	178	344	358	55
N-ALTi-HE-803-2-10-T4-2G	2xMULTi-HE 803-2G	50	3x400	11,2	60	3x380	11,4	60	3x440	11	2x2,2	3”	10	850	600	820	178	382	352	72
N-ALTi-HE-1602-2-10-T4-2G	2xMULTi-HE 1602-2G	50	3x400	11,2	60	3x380	11,4	60	3x440	11	2x2,2	3”	10	850	600	840	178	392	372	72
N-ALTi-HE-205-3-10-T4-2G	3xMULTi-HE 205-2G	50	3x400	9,9	60	3x380	10,1	60	3x440	9,6	3x1,1	2”	10	850	900	760	178	344	310	55
N-ALTi-HE-403-3-10-T4-2G	3xMULTi-HE 403-2G	50	3x400	9,9	60	3x380	10,1	60	3x440	9,6	3x1,1	2”	10	850	900	760	178	344	310	55
N-ALTi-HE-406-3-10-T4-2G	3xMULTi-HE 406-2G	50	3x400	16,8	60	3x380	17,1	60	3x440	16,5	3x2,2	2”	10	850	900	760	178	344	358	55
N-ALTi-HE-803-3-10-T4-2G	3xMULTi-HE 803-2G	50	3x400	16,8	60	3x380	17,1	60	3x440	16,5	3x2,2	3”	10	850	900	820	178	382	352	72
N-ALTi-HE-1602-3-10-T4-2G	3xMULTi-HE 1602-2G	50	3x400	16,8	60	3x380	17,1	60	3x440	16,5	3x2,2	DN100	10	850	900	892	178	392	372	100

SIZES AND ELECTRICAL CHARACTERISTICS - N-ALTI-VE SERIE

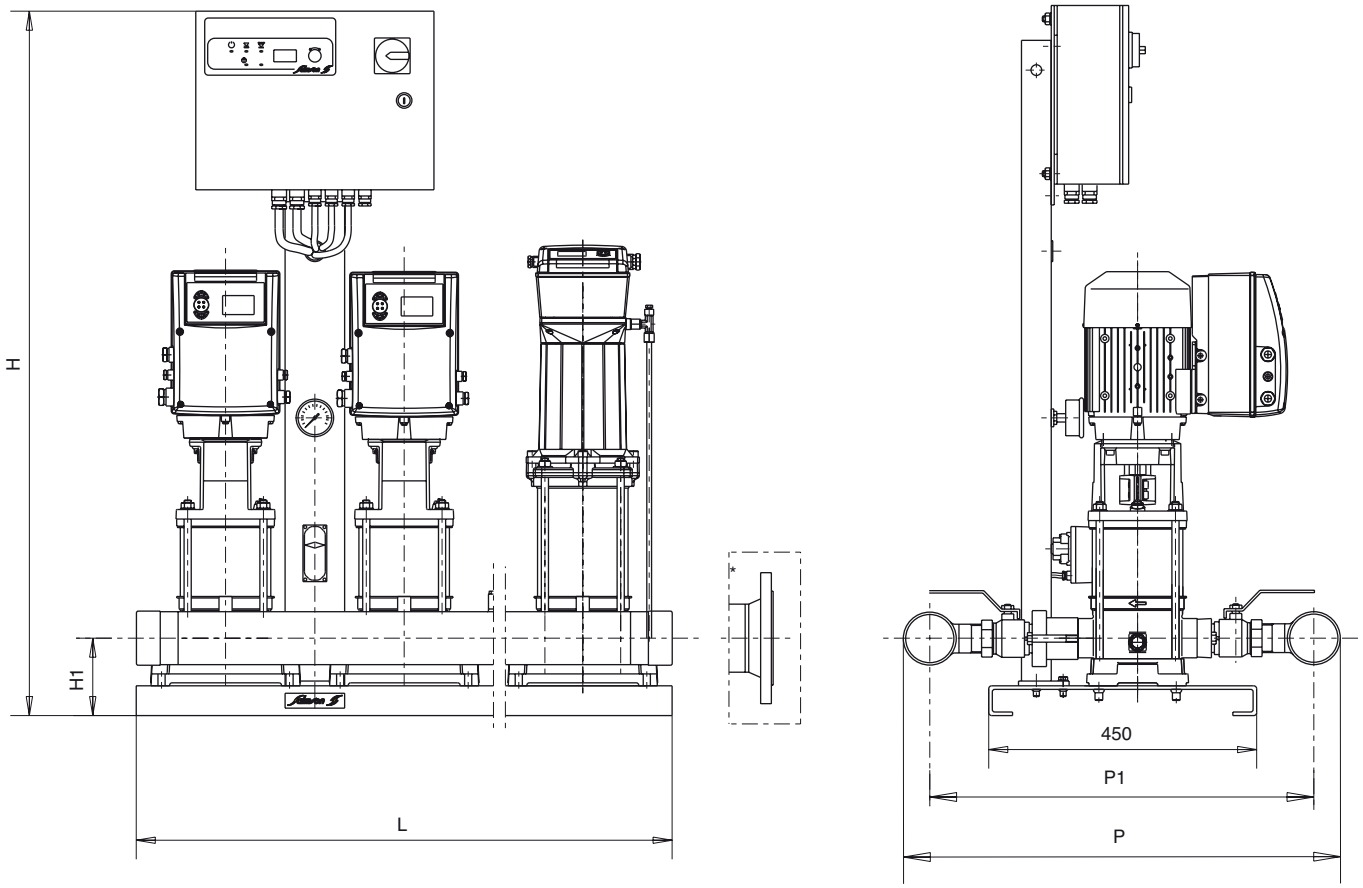

N-ALTi-VE (2,4,8)

Name of the booster pump	Type of pump	Freq.	T	In	Freq.	T	In	Freq.	T	In	P2	Ø	PN	H	L	P	H1	P1	P3
		Hz	V	A	Hz	V	A	Hz	V	A	kW	Coll.	bar	mm	mm	mm	mm	mm	mm
N-ALTi-VE-204-2-16-T4-2G	2 x MULTi-VE 204-2G	50	3x400	6,4	60	3x380	6,4	60	3x440	5,8	2x1,1	2”	16	1195	600	610	100	550	300
N-ALTi-VE-208-2-16-T4-2G	2 x MULTi-VE 208-2G	50	3x400	12,2	60	3x380	12,2	60	3x440	8,8	2x2,2	2”	16	1195	600	610	100	550	300
N-ALTi-VE-403-2-16-T4-2G	2 x MULTi-VE 403-2G	50	3x400	6,4	60	3x380	6,4	60	3x440	6	2x1,1	2”	16	1195	600	610	100	550	300
N-ALTi-VE-406-2-16-T4-2G	2 x MULTi-VE 406-2G	50	3x400	12,4	60	3x380	12,4	60	3x440	9,4	2x2,2	2”	16	1195	600	610	100	550	300
N-ALTi-VE-803-2-16-T4-2G	2 x MULTi-VE 803-2G	50	3x400	11,4	60	3x380	11,4	60	3x440	8,4	2x2,2	3”	16	1195	600	730	130	641	450
N-ALTi-VE-806-2-16-T4-2G	2 x MULTi-VE 806-2G	50	3x400	20,2	60	3x380	21,2	60	3x440	15,2	2x4	3”	16	1195	600	730	130	641	450
N-ALTi-VE-808-2-16-T4	2 x MULTi-VE 808	50	3x400	21,6	60	3x380	22,6	60	3x440	20,2	2x5,5	3”	16	1420	600	730	130	641	450
N-ALTi-VE-204-3-16-T4-2G	3 x MULTi-VE 204-2G	50	3x400	9,6	60	3x380	9,6	60	3x440	8,7	3x1,1	2”	16	1195	900	610	100	550	300
N-ALTi-VE-208-3-16-T4-2G	3 x MULTi-VE 208-2G	50	3x400	18,3	60	3x380	18,3	60	3x440	13,2	3x2,2	2”	16	1195	900	610	100	550	300
N-ALTi-VE-403-3-16-T4-2G	3 x MULTi-VE 403-2G	50	3x400	9,6	60	3x380	9,6	60	3x440	9	3x1,1	2”	16	1195	900	610	100	550	300
N-ALTi-VE-406-3-16-T4-2G	3 x MULTi-VE 406-2G	50	3x400	18,6	60	3x380	18,6	60	3x440	14,1	3x2,2	2”	16	1195	900	610	100	550	300
N-ALTi-VE-803-3-16-T4-2G	3 x MULTi-VE 803-2G	50	3x400	17,1	60	3x380	17,1	60	3x440	12,6	3x2,2	3”	16	1195	900	730	130	641	450
N-ALTi-VE-806-3-16-T4-2G	3 x MULTi-VE 806-2G	50	3x400	30,3	60	3x380	31,8	60	3x440	22,8	3x4	3”	16	1195	900	730	130	641	450
N-ALTi-VE-808-3-16-T4	3 x MULTi-VE 808	50	3x400	32,4	60	3x380	33,9	60	3x440	30,3	3x5,5	3”	16	1420	900	730	130	641	450

HYDROPLUS-E

SIZES AND ELECTRICAL CHARACTERISTICS - N-ALTI-VSE SERIE

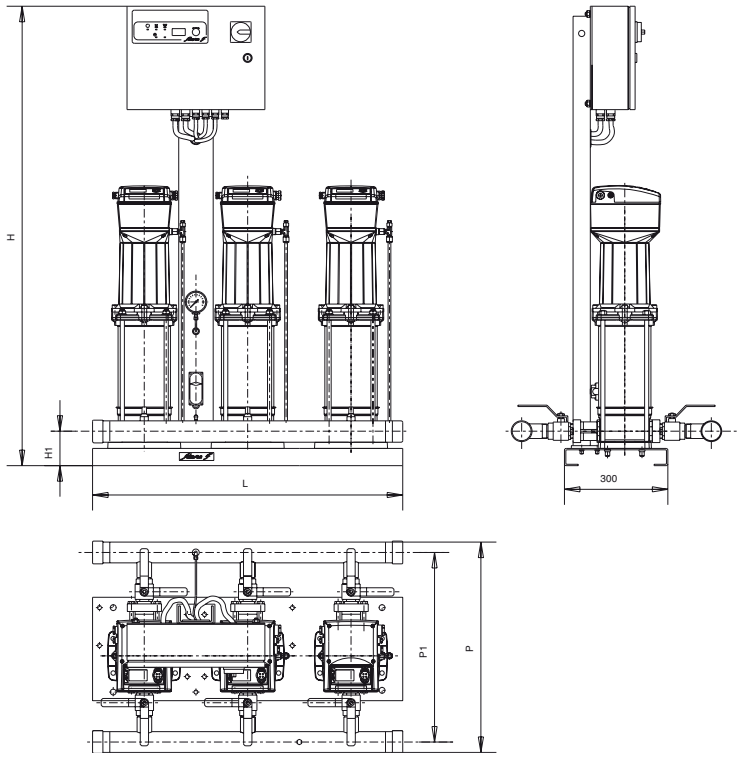

MULTi-VSE (2,4,8)

Name of the booster pump	Type of pump	Voltage	Intensity	Coll.	PN	H	L	P	H1	P1	P1	P3
2 Pumps		V	A	Ø	bar	mm	mm	mm	mm	mm	mm	mm
N-ALTI-VSE206-2-16-T4-2G	2 x MULTi-VSE206-2-16-T4-2G	400V-3~ 50Hz	8,4	2"	16	1195	600	610	100	550	596	300
N-ALTI-VSE210-2-16-T4-2G	2 x MULTi-VSE210-2-16-T4-2G	400V-3~ 50Hz	13	2"	16	1365	600	610	100	550	596	300
N-ALTI-VSE404-2-16-T4-2G	2 x MULTi-VSE404-2-16-T4-2G	400V-3~ 50Hz	8,4	2"	16	1195	600	610	100	550	596	300
N-ALTI-VSE406-2-16-T4-2G	2 x MULTi-VSE406-2-16-T4-2G	400V-3~ 50Hz	8,4	2"	16	1195	600	610	100	550	596	300
N-ALTI-VSE410-2-16-T4-2G	2 x MULTi-VSE410-2-16-T4-2G	400V-3~ 50Hz	13	2"	16	1365	600	610	100	550	596	300
N-ALTI-VSE-803-2-16-T4-2G	2 x MULTi-VSE-803-2-16-T4-2G	400V-3~ 50Hz	8,4	3"	16	1195	600	730	130	641	700	450
N-ALTI-VSE-806-2-16-T4-2G	2 x MULTi-VSE-806-2-16-T4-2G	400V-3~ 50Hz	13	3"	16	1195	600	730	130	641	700	450
3 Pumps		V	A	Ø	bar	mm	mm	mm	mm	mm	mm	mm
N-ALTI-VSE206-3-16-T4-2G	3 x MULTi-VSE206-3-16-T4-2G	400V-3~ 50Hz	12,6	2"	16	1195	900	610	100	550	596	300
N-ALTI-VSE210-3-16-T4-2G	3 x MULTi-VSE210-3-16-T4-2G	400V-3~ 50Hz	19,5	2"	16	1365	900	610	100	550	596	300
N-ALTI-VSE404-3-16-T4-2G	3 x MULTi-VSE404-3-16-T4-2G	400V-3~ 50Hz	12,6	2"	16	1195	900	610	100	550	596	300
N-ALTI-VSE406-3-16-T4-2G	3 x MULTi-VSE406-3-16-T4-2G	400V-3~ 50Hz	12,6	2"	16	1195	900	610	100	550	596	300
N-ALTI-VSE410-3-16-T4-2G	3 x MULTi-VSE410-3-16-T4-2G	400V-3~ 50Hz	19,5	2"	16	1365	900	610	100	550	596	300
N-ALTI-VSE 803-3-16-T4-2G	3 x MULTi-VSE 803-3-16-T4-2G	400V-3~ 50Hz	12,6	3"	16	1195	900	730	130	641	700	450
N-ALTI-VSE 806-3-16-T4-2G	3 x MULTi-VSE 806-3-16-T4-2G	400V-3~ 50Hz	19,5	3"	16	1195	900	730	130	641	700	450

RECOMMENDED ACCESSORIES

- Water supply by-pass, for direct connection to the mains water supply
- Vibration damping rubber sleeves.
- Back flange kit, sold in pairs.
- Isolating valves.
- Card of separate reports (on/fault).

FEATURES

a) Assembly

- On flat surface or on concrete slab fixed with anchor bolts.
- Intake and outlet pipes can be connected either on the right or the left.

b) Packaging

On pallet.

RANGE OF APPLICATION

Flows up to:	95 m³/h
Manometric head up to:	160 m CE
Maximum working pressure :	10 - 16 bar
Maximum water temperature:	70°C
Ambient temperature:	40°C

HYDROPLUS-E (EBMS)

BOOSTER PUMPS

Fitted with pumps with integral EVS : Small institutions and industrial use

EBMS: "Master/Slave" operation

EVS: Electronic Variation Speed

2 pole - 50/60 Hz

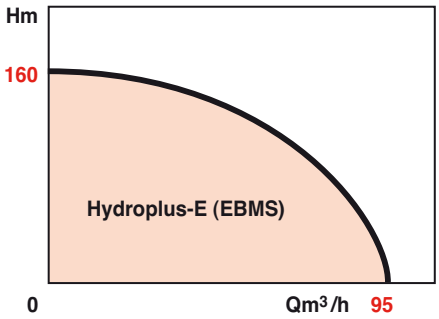

APPLICATIONS

Creating and maintaining the pressure level in water supply systems with low or nonexistent pressure for:

- housing complexes, offices,
- private homes,
- hotels, hospitals, clinics,
- shopping centres, shops,
- primary schools, secondary schools, universities, army barracks,
- industrial and agricultural buildings,
- irrigation, watering …

ADVANTAGES

- **EBMS: Under the "Master/Slave" technique, pumps control themselves which therefore means that there is only one protective switch box for the electrical connections to the booster pump.**
- **Energy saving and quiet-running are achieved by the continuous adjustment of the pump's rotation speed in response to the demand for pressure.**
- **The pumps integral frequency changers make the modules more compact.**
- **Versatile use, less jerky and less water hammer.**
- **Choice of horizontal or vertical multistage pumps with integral EVS.**
- **Convenient to install and use because of the module's easy application and operation.**
- **Pipes in 316 Ti grade stainless steel: greater protection against corrosion and longer life.**
- **Protection against low water levels integral to the pressure controllers.**

EVS

Certified ACS



- N-ALTi-HE-MS-2G



- N-ALTi-VE-MS-2G

HYDROPLUS-E (EBMS)

DESIGN

- Pre-wired compact booster pumps, ready to be installed. Water supply to the booster pump can be from a mains supply (Version V) or a storage tank (Version B). The booster pumps can operate under pressure or by suction (maximum 1 m).

• Hydraulic part

Max. operating pressure:

N-ALTi-HE	10 bar
N-ALTi-VE	16 bar

Ø pipes:	2 pumps	3 pumps
N-ALTi 200	2''	2''
N-ALTi 400	2''	2''
N-ALTi 800	3''	3''
N-ALTi 1600	3''/DN100	DN 100

• Electrical part

Switch box:	3~400 ± 10% (without neutral)
	3~380/440 ±6% (without neutral)
Frequency:	50/60 Hz
Protection class:	IP 54
Complies with EMC:	EN 61000-6-2/3

BASIC CONSTRUCTION

Main components	Materials
Pumps	304 stainless steel
Pipes	316 Ti stainless steel

STANDARDS & SPECIFICATIONS

- Directive on Machinery 2006/42/CE.
- Electromagnetic compatibility Directive 2004/108/EC
- Low Voltage Directive 2006/95/CE
- IEC/CEI 60364 (NFC 15-100) (Electrical Installations).
- Certificate of Sanitary Conformity (ACS).
- EN 809-Pumps and pump units for liquids.
- EN 61000-6-1 and EN 61000-6-3 or EN 61000-6-2 and EN 61000-6-4 (Immunity / Emissions).
- EN 60204-1 (Electrical Safety of Machinery), EN 12100-2 (Mechanical Safety of Machinery), EN 60439-1 (Electrical and electronic switch boxes).

DESCRIPTION OF THE BOOSTER PUMP

• N-ALTi-HE EBMS

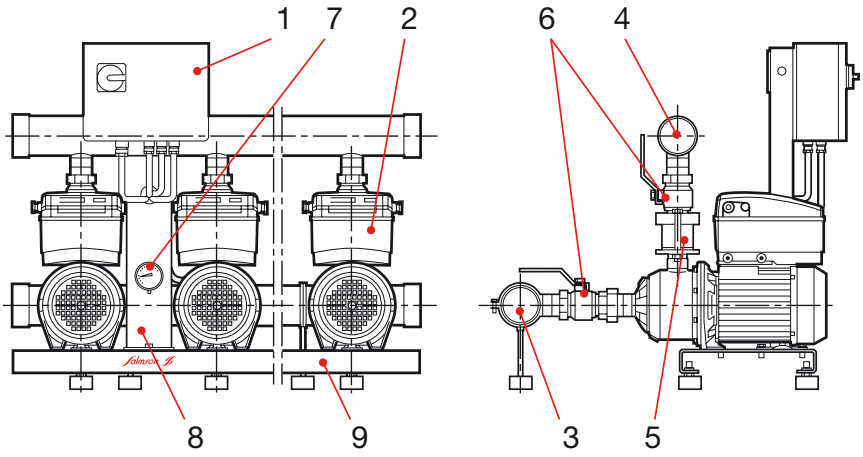

• N-ALTi-VE EBMS

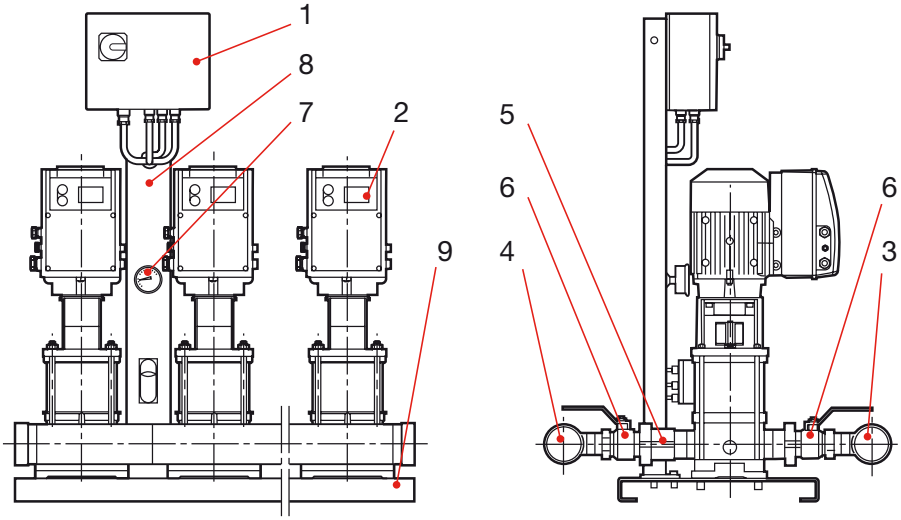

N°	Components	N-ALTi-HE Number of pumps		N-ALTi-VE Number of pumps	
		2	3	2	3
1	Three pole isolating switch	1	1	1	1
2	Pumps MULTi-HE	2	3	—	—
	Pumps MULTi-VE	—	—	2	3
3	Pipe intake	1	1	1	1
4	Pipe outlet	1	1	1	1
5	Non-return valve	2	3	2	3
6	Valves	4	6	4	6
7	Pressure gauge	1	1	1	1
8	Pressure transmitter	1	1	1	1
9	Frame	1	1	1	1

HYDROPLUS-E (EBMS)

GENERAL OPERATING PRINCIPLES

The outlet pressure of the booster pump adjusts to the set pressure by varying the speed in each pump.

Description of the operation:

- If the system pressure reduces to below the set pressure: pump no.1 (master pump) starts and adjusts its speed to the set pressure.
- If the demand is higher than the maximum flow of a pump, pump no.1 operates at 100% and pump no.2 (slave pump) starts and adjusts its speed in turn.
- If the demand is higher than the maximum flow of 2 pumps, pumps no.1 and no.2 operate at 100% and pump no.3 starts and adjusts its speed in turn.
- When the demand reduces, the pumps stop successively from pump no.3 to pump no.1.

FUNCTIONS

- Operates in cascade with automatic management of demand.
- A screen on the frequency changer for each pump allows direct viewing of the state of the pumps (on/off/faults).
- If there is a fault on a frequency changer (master or slave), the remaining converter(s) will maintain control.
- Each frequency changer is fitted with a low water level detection system.
- The pumps' operating time (master and slaves) is optimised because of the cyclical changeover of pumps every 3½ hours.

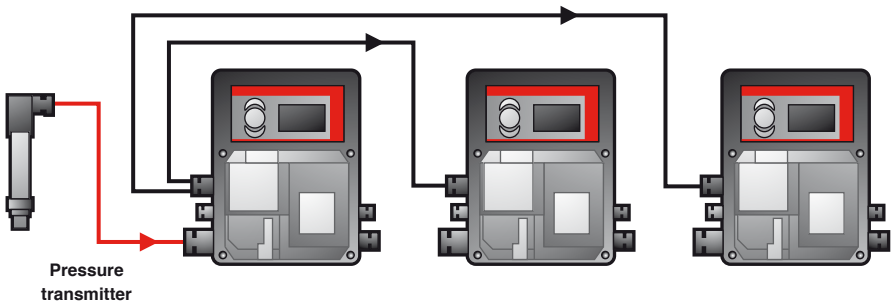

Operating time	Converter No 1	Converter N° 2	Converter N° 3
t = 0	Master	Slave	Slave
t = 3½ hours	Slave	Master	Slave
t = 7h	Slave	Slave	Master
...	...	...	...

IDENTIFICATION OF THE BOOSTER PUMP

N - ALTi - HE - MS 405 - 2 - 10 - T4 - 2G
VE 3 16

- N: New - Booster pump code
- Type of pump
- MS: Master/Slave
- Size of pump
- Number of pumps
- Admissible pressure: 10 or 16 bar
- Supply voltage: - T2 = Three-phase 230 V
  - T4 = Three-phase 400 V
- Second generation MULTi-VE/HE pump

HYDROPLUS-E (EBMS)

HYDRAULICS PERFORMANCES - N-ALTI-HE SERIE

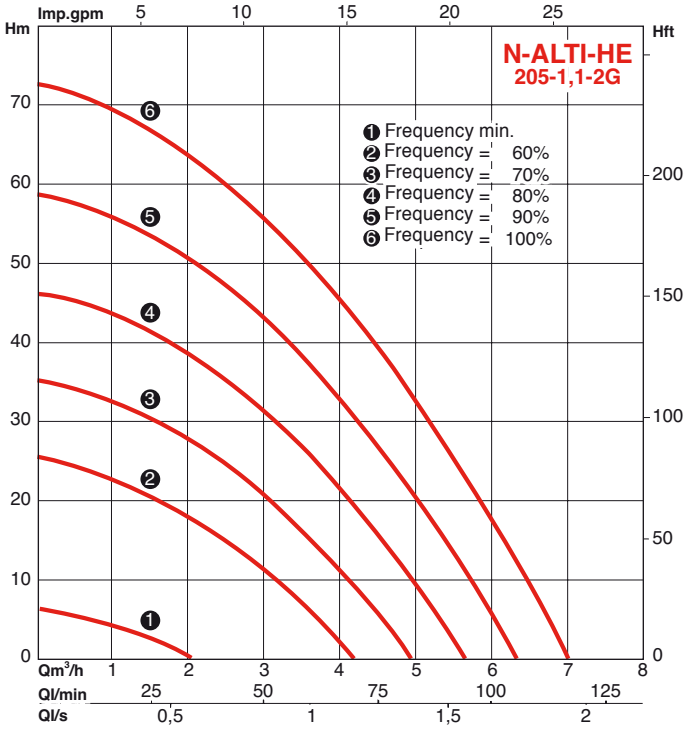

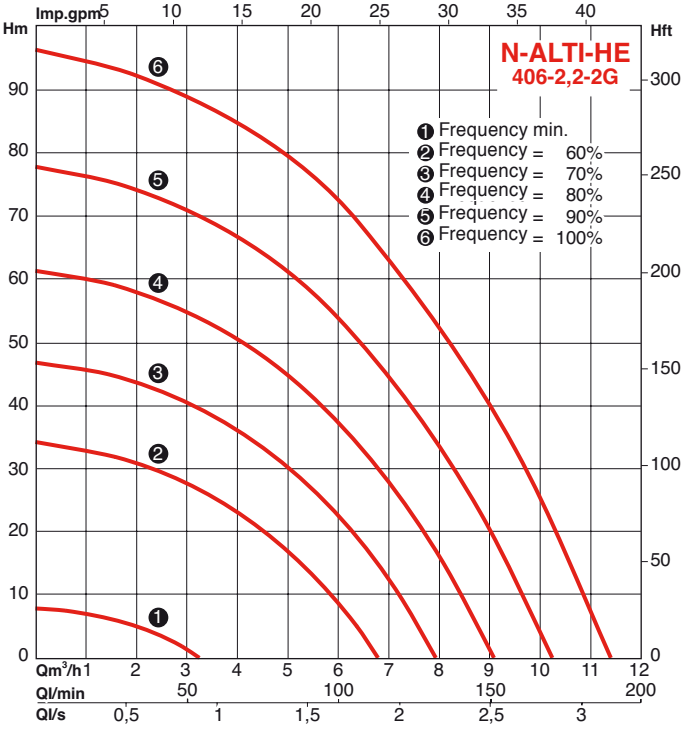

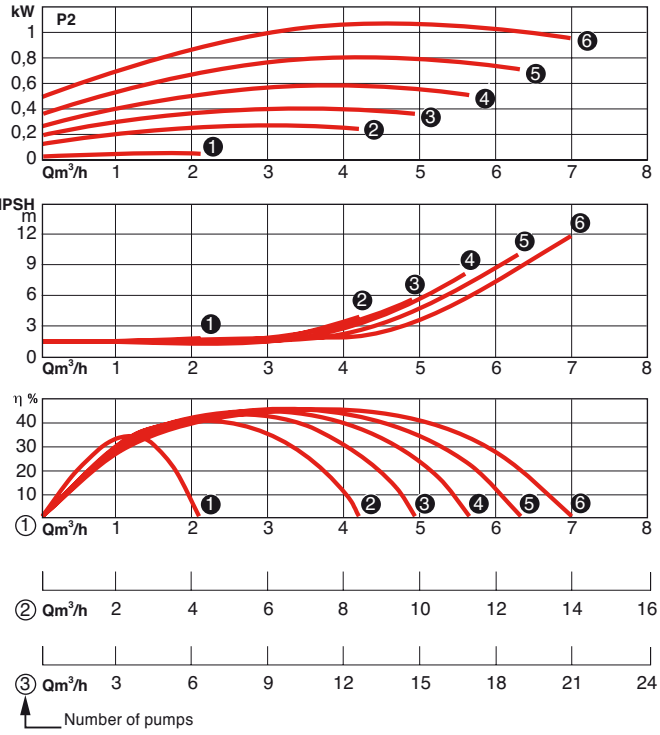

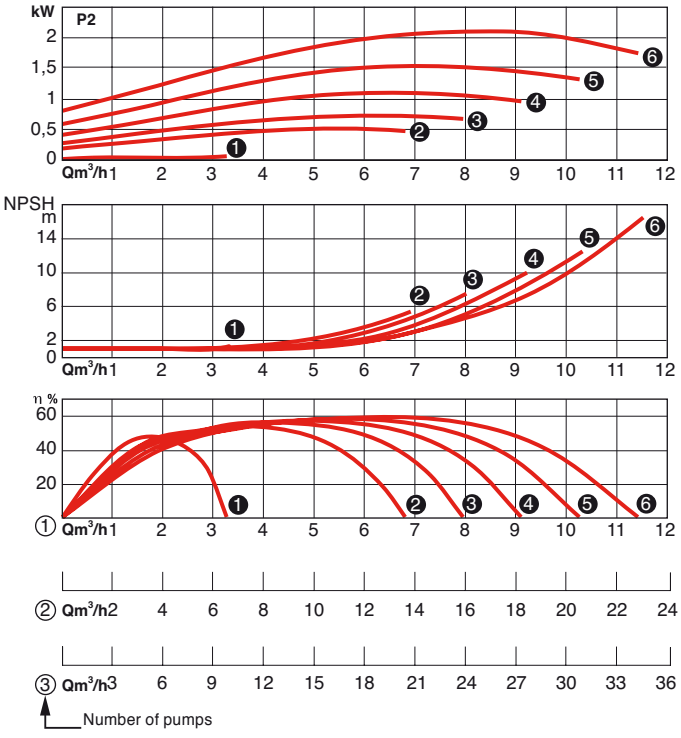

HYDRAULICS PERFORMANCES - N-ALTI-HE SERIE

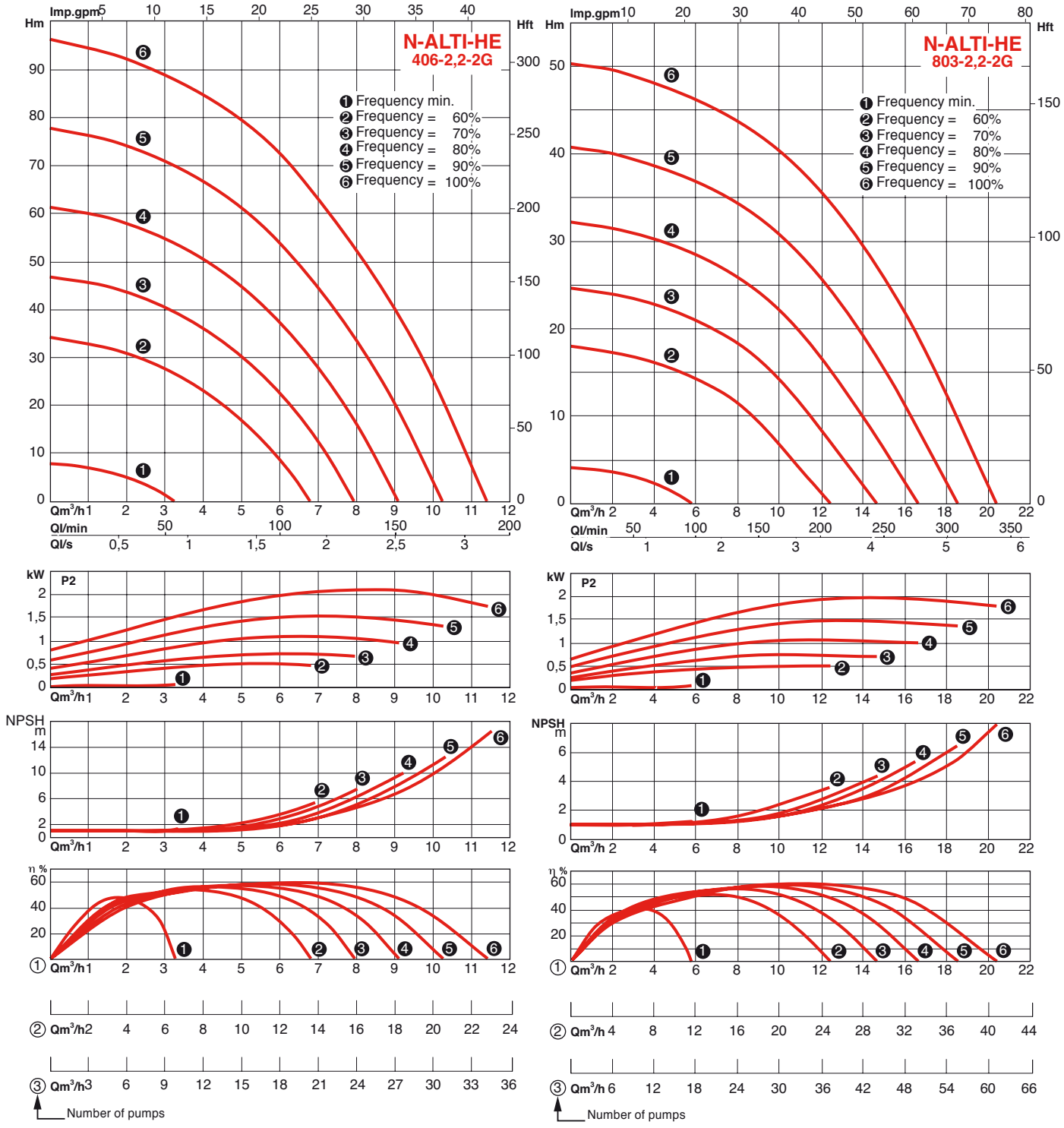

HYDROPLUS-E (EBMS)

HYDRAULICS PERFORMANCES - N-ALTI-HE SERIE

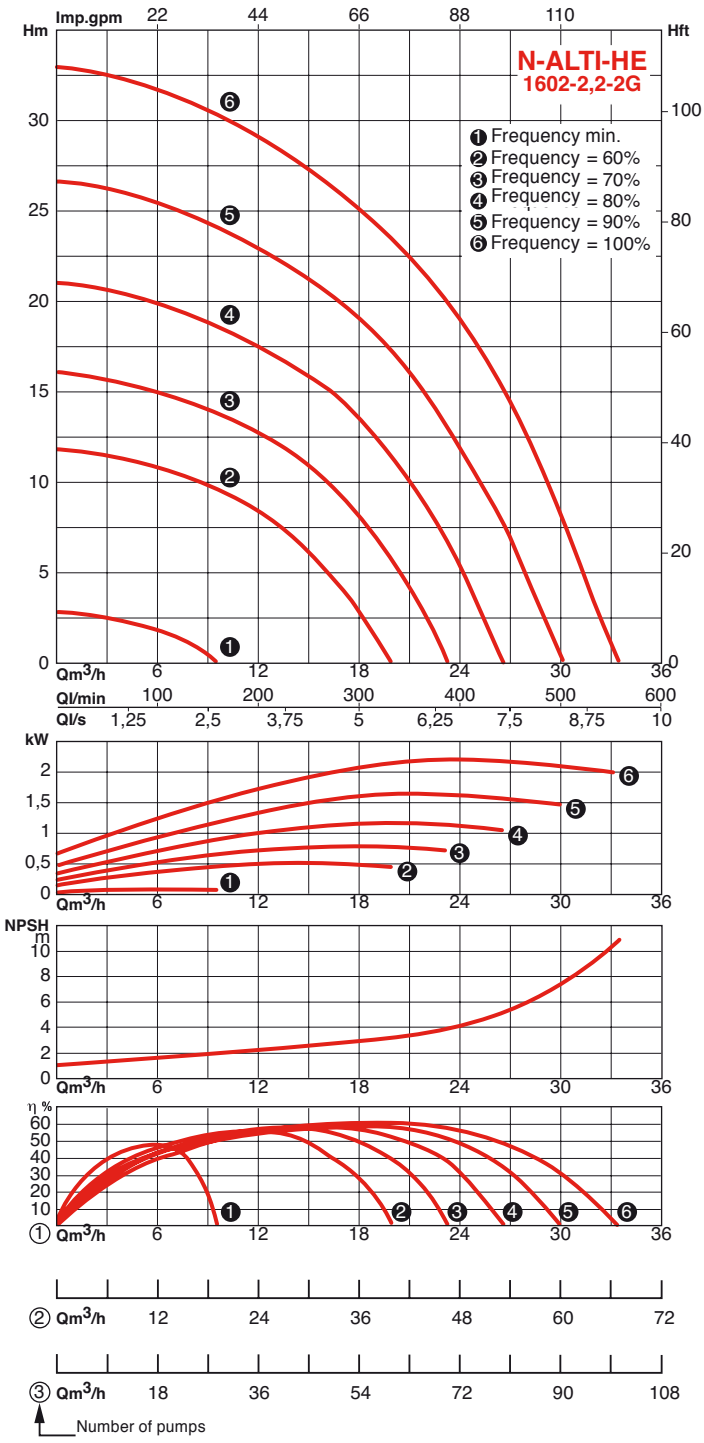

HYDRAULICS PERFORMANCES - N-ALTI-VE SERIE

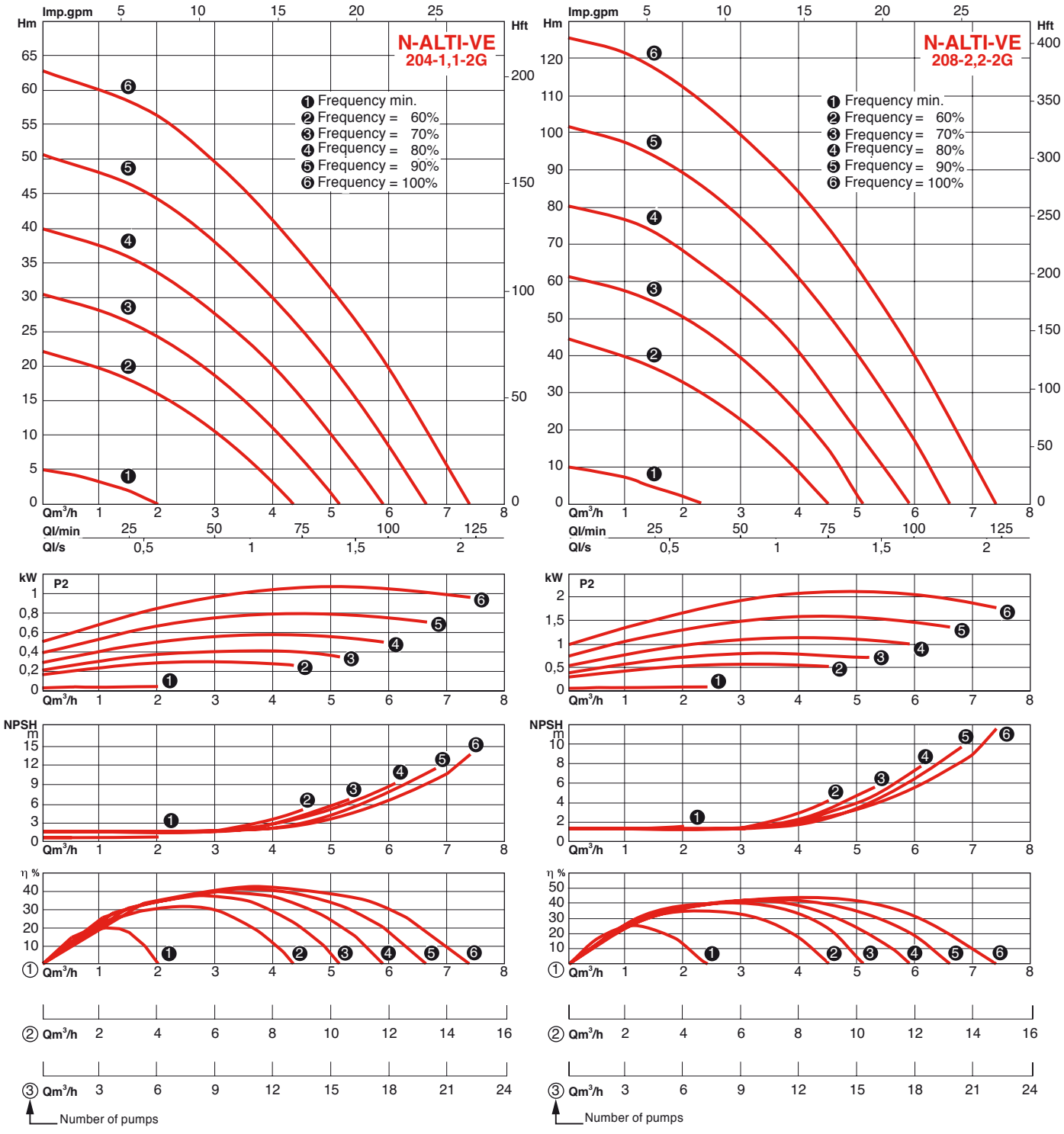

HYDROPLUS-E (EBMS)

HYDRAULICS PERFORMANCES - N-ALTI-VE SERIE

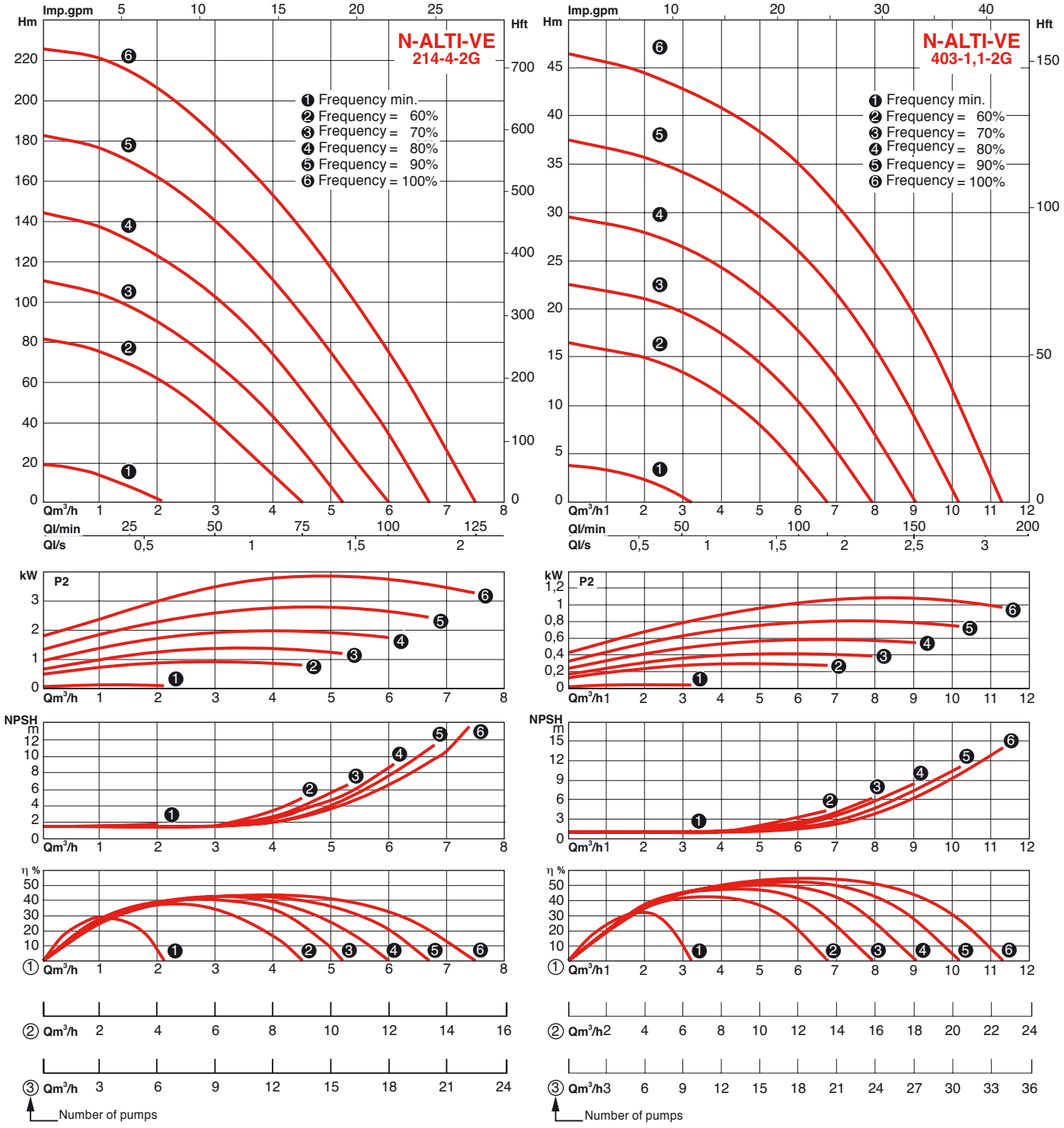

HYDRAULICS PERFORMANCES - N-ALTI-VE SERIE

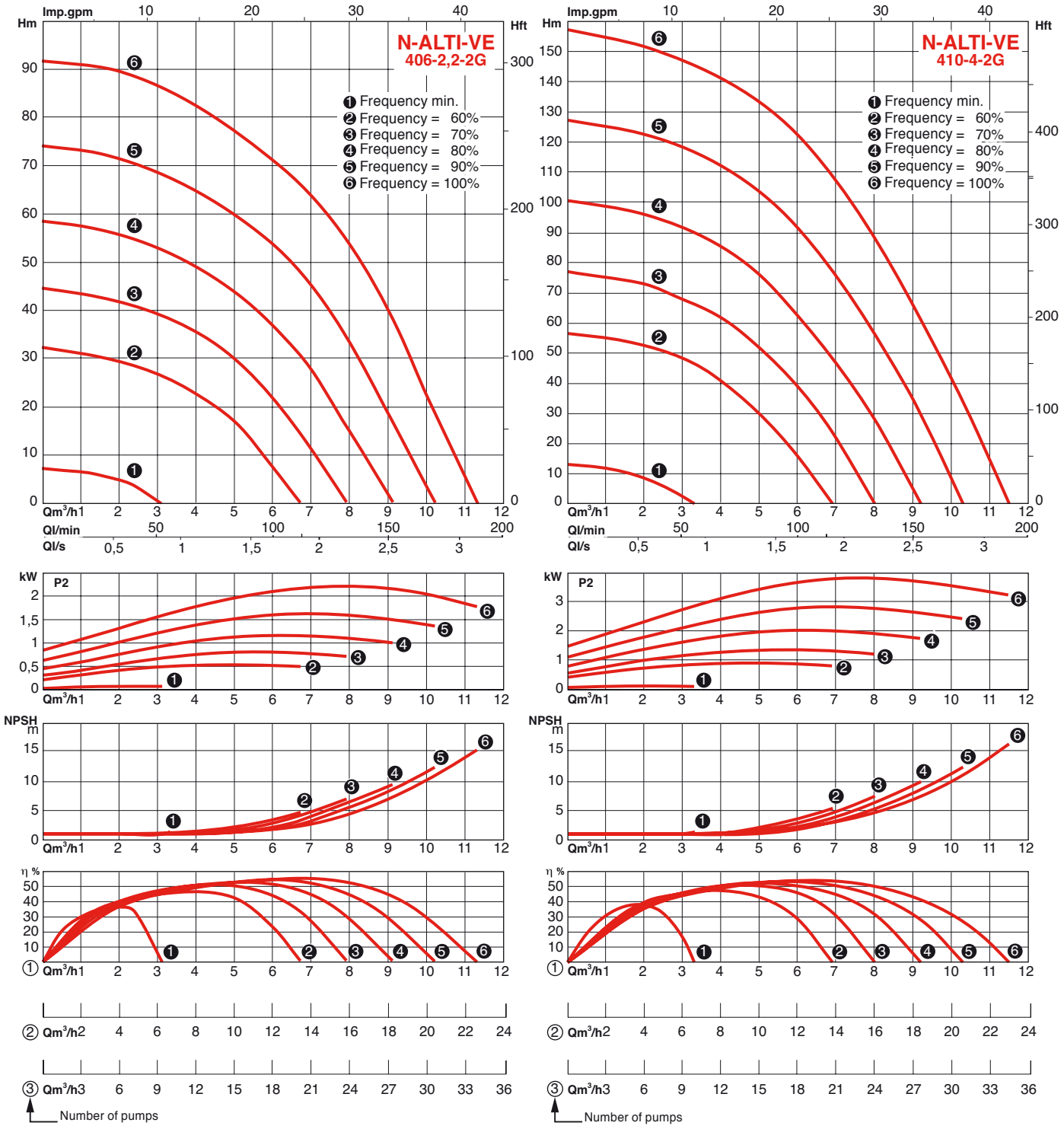

HYDROPLUS-E (EBMS)

HYDRAULICS PERFORMANCES - N-ALTI-VE SERIE

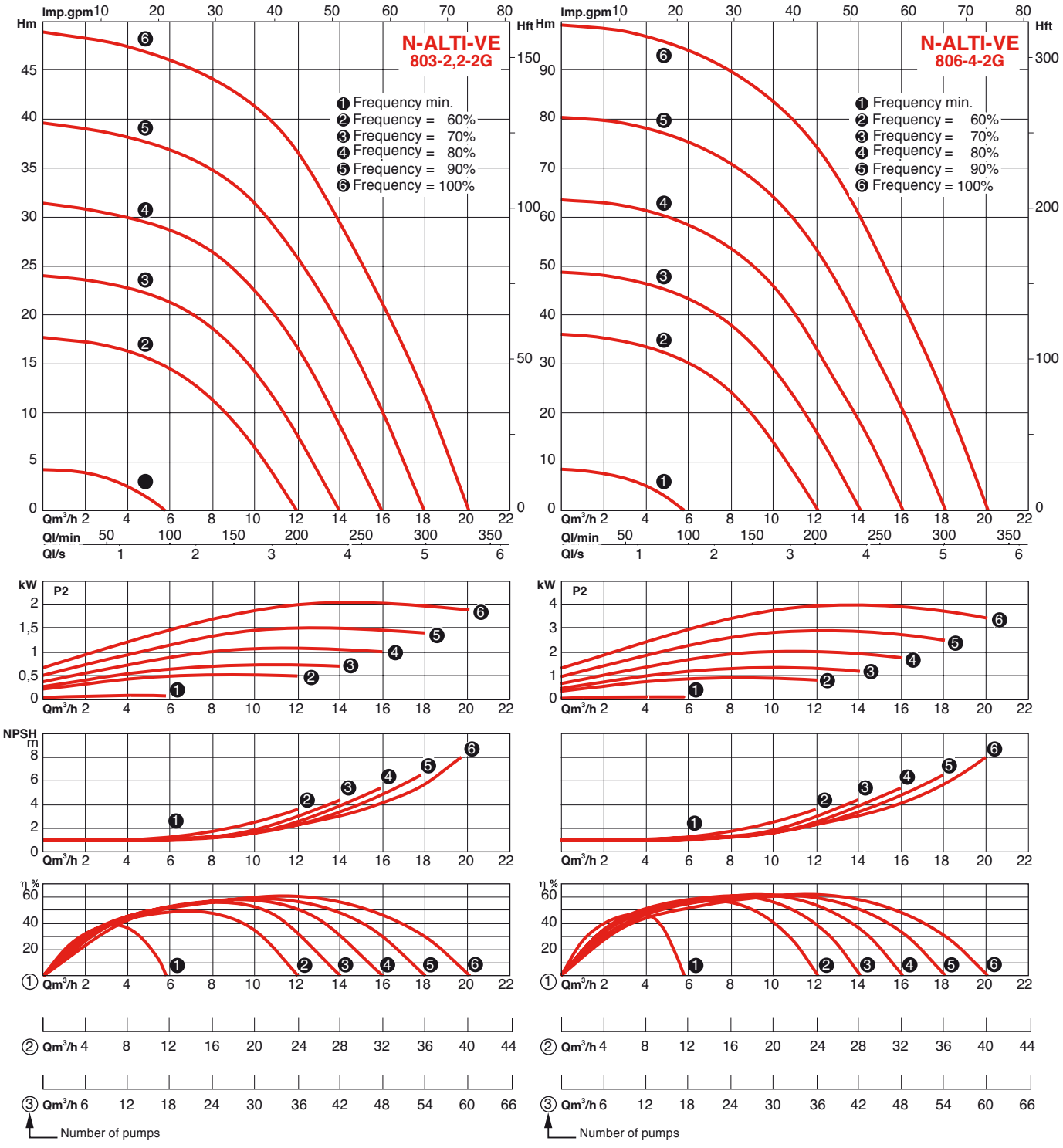

ELECTRICAL SPECIFICATIONS AND SIZES - N-ALTI-VE SERIE

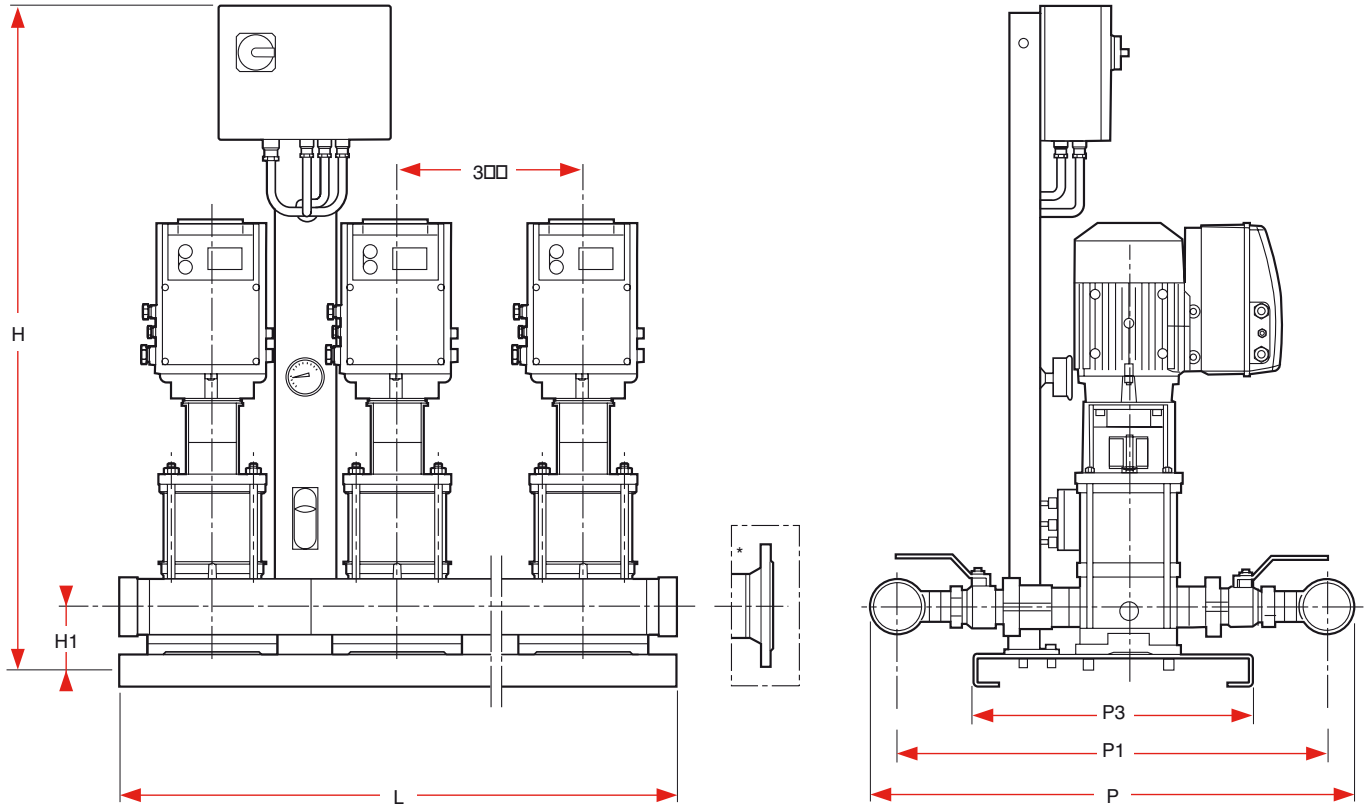

•N-ALTi-VE EBMS 2G (2,4,8)

NAME OF THE BOOSTER PUMP	Type and number of pump	ƒ	T	In	ƒ	T	IN	ƒ	T	In	P2	Ø	PN	H	L	P	H1	P1	P3
		Hz	V	A	Hz	V	A	Hz	V	A	kW	Coll.	bar	mm	mm	mm	mm	mm	mm
N-ALTi-VE-MS204-2-16-T4-2G	2 x MULTi-VE 204-2G	50	3x400	6,4	60	3x380	6,4	60	3x440	5,8	2x1,1	2”	16	1134	600	610	100	550	300
N-ALTi-VE-MS208-2-16-T4-2G	2 x MULTi-VE 208-2G	50	3x400	12,2	60	3x380	12,2	60	3x440	8,8	2x2,2	2”	16	1134	600	610	100	550	300
N-ALTi-VE-MS403-2-16-T4-2G	2 x MULTi-VE 403-2G	50	3x400	6,4	60	3x380	6,4	60	3x440	6	2x1,1	2”	16	1134	600	610	100	550	300
N-ALTi-VE-MS406-2-16-T4-2G	2 x MULTi-VE 406-2G	50	3x400	12,4	60	3x380	12,4	60	3x440	9,4	2x2,2	2”	16	1134	600	610	100	550	300
N-ALTi-VE-MS803-2-16-T4-2G	2 x MULTi-VE 803-2G	50	3x400	11,4	60	3x380	11,4	60	3x440	8,4	2x2,2	3”	16	1070	600	789	130	700	450
N-ALTi-VE-MS806-2-16-T4-2G	2 x MULTi-VE 806-2G	50	3x400	20,2	60	3x380	21,2	60	3x440	15,2	2x4	3”	16	1070	600	789	130	700	450
N-ALTi-VE-MS204-3-16-T4-2G	3 x MULTi-VE 204-2G	50	3x400	9,6	60	3x380	9,6	60	3x440	8,7	3x1,1	2”	16	1134	900	610	100	550	300
N-ALTi-VE-MS208-3-16-T4-2G	3 x MULTi-VE 208-2G	50	3x400	18,3	60	3x380	18,3	60	3x440	13,2	3x2,2	2”	16	1134	900	610	100	550	300
N-ALTi-VE-MS403-3-16-T4-2G	3 x MULTi-VE 403-2G	50	3x400	9,6	60	3x380	9,6	60	3x440	9	3x1,1	2”	16	1134	900	610	100	550	300
N-ALTi-VE-MS406-3-16-T4-2G	3 x MULTi-VE 406-2G	50	3x400	18,6	60	3x380	18,6	60	3x440	14,1	3x2,2	2”	16	1134	900	610	100	550	300
N-ALTi-VE-MS803-3-16-T4-2G	3 x MULTi-VE 803-2G	50	3x400	17,1	60	3x380	17,1	60	3x440	12,6	3x2,2	3”	16	1070	900	789	130	700	450
N-ALTi-VE-MS806-3-16-T4-2G	3 x MULTi-VE 806-2G	50	3x400	30,3	60	3x380	31,8	60	3x440	22,8	3x4	3”	16	1070	900	789	130	700	450

HYDROPLUS-E (EBMS)

ELECTRICAL SPECIFICATIONS AND SIZES - N-ALTI-HE SERIE

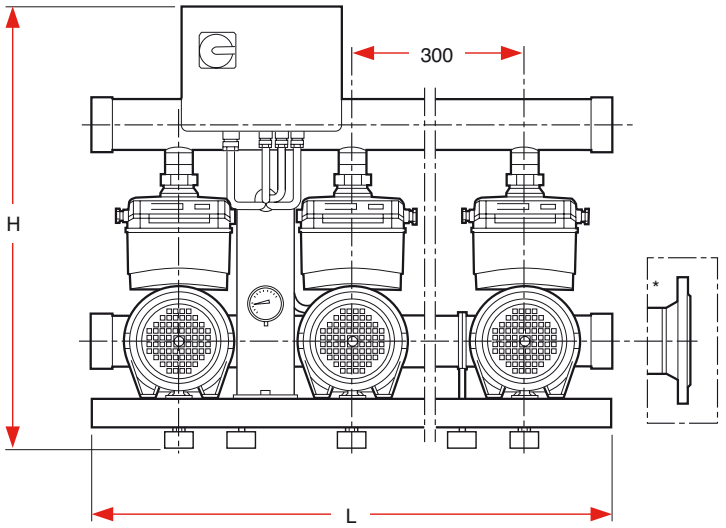

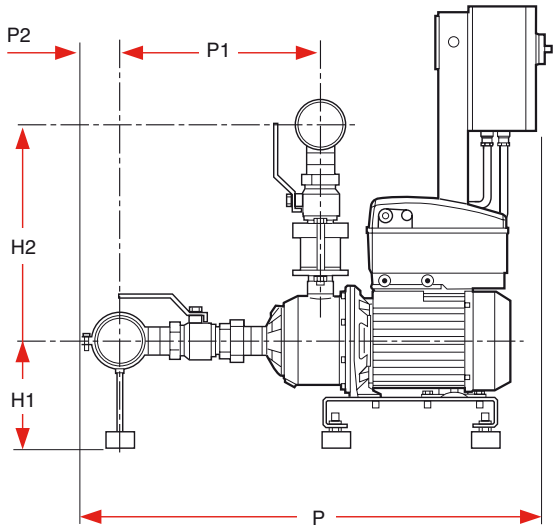

• N-ALTi-HE EBMS 2G (2,4,8,16)

NAME OF THE BOOSTER PUMP	Type and number of pump	ƒ	T	In	ƒ	T	IN	ƒ	T	In	P2	Ø	PN	H	L	P	H1	H2	P1	P2
		Hz	V	A	Hz	V	A	Hz	V	A	kW	Coll.	bar	mm	mm	mm	mm	mm	mm	mm
N-ALTi-HE-MS205-2-10-T4-2G	2 x MULTi-HE 205-2G	50	3x400	6,6	60	3x380	6,8	60	3x440	6,4	2x1,1	2”	10	750	600	750	178	344	310	55
N-ALTi-HE-MS403-2-10-T4-2G	2 x MULTi-HE 403-2G	50	3x400	6,6	60	3x380	6,8	60	3x440	6,4	2x1,1	2”	10	750	600	750	178	344	310	55
N-ALTi-HE-MS406-2-10-T4-2G	2 x MULTi-HE 406-2G	50	3x400	11,2	60	3x380	11,4	60	3x440	11	2x2,2	2”	10	750	600	750	178	344	358	55
N-ALTi-HE-MS803-2-10-T4-2G	2 x MULTi-HE 803-2G	50	3x400	11,2	60	3x380	11,4	60	3x440	11	2x2,2	3”	10	750	600	810	178	382	352	72
N-ALTi-HE-MS1602-2-10-T4-2G	2 x MULTi-HE 1602-2G	50	3x400	11,2	60	3x380	11,4	60	3x440	11	2x2,2	3”	10	750	600	830	178	392	372	72
N-ALTi-HE-MS205-3-10-T4-2G	3 x MULTi-HE 205-2G	50	3x400	9,9	60	3x380	10,1	60	3x440	9,6	3x1,1	2”	10	750	900	750	178	344	310	55
N-ALTi-HE-MS403-3-10-T4-2G	3 x MULTi-HE 403-2G	50	3x400	9,9	60	3x380	10,1	60	3x440	9,6	3x1,1	2”	10	750	900	750	178	344	310	55
N-ALTi-HE-MS406-3-10-T4-2G	3 x MULTi-HE 406-2G	50	3x400	16,8	60	3x380	17,1	60	3x440	16,5	3x2,2	2”	10	750	900	750	188	344	358	55
N-ALTi-HE-MS803-3-10-T4-2G	3 x MULTi-HE 803-2G	50	3x400	16,8	60	3x380	17,1	60	3x440	16,5	3x2,2	3”	10	750	900	810	188	382	352	72
N-ALTi-HE-MS1602-3-10-T4-2G	3 x MULTi-HE 1602-2G	50	3x400	16,8	60	3x380	17,1	60	3x440	16,5	3x2,2	DN100*	10	750	600	882	188	392	372	100

RECOMMANDED ACCESSORIES

- Water supply by-pass, for direct connection to the mains water supply.
- Vibration damping rubber sleeves.
- Back flange kit, sold in pairs.
- Isolating valves.

FEATURES

a) Assembly

- On flat surface or on concrete slab fixed with anchor bolts.
- Intake and outlet pipes can be connected either on the right or the left.
- Booster pump pre-wired in the factory.

b) Packaging

On pallet.

OPERATING RANGES

Flow rates of up to:	**55 m³/h**
Manometric heads of up to:	**62 mCE**
Max. water temperature:	**+ 45°C**
Max. operating pressure:	**10 bar**

HYDROBAT-HPBS

FIRE PROTECTION BOOSTER PUMPS APSAD-COMPLIANT

50 Hz

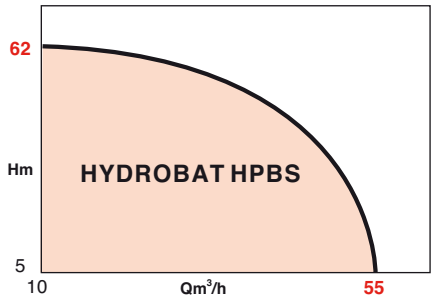

APPLICATIONS

R.I.A.

Water supply for advanced hose reel systems and pressurisation of fire-fighting systems.

Protection of:

– Office buildings,
– Hotels,
– Shops,
– Hospitals,
– Shopping centres,
– Schools and colleges,
– Industrial buildings.

ADVANTAGES

- **Compact, factory-preset module ready for installation.**
- **Requires very little space.**
- **Easy installation: 2 hydraulic couplings and one electrical connection.**
- **Controls and protective mechanisms housed in a cabinet providing completely automated operation.**
- **Completely safe operation thanks to the back-up pump, which starts up automatically in the event of a fault on the main pump.**

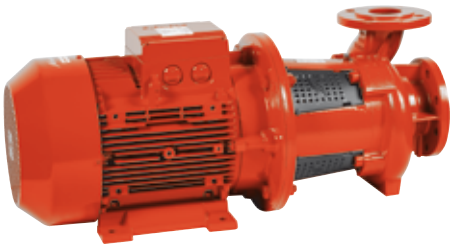

• **PBS Pump** fitted to the advanced hose reel system module.

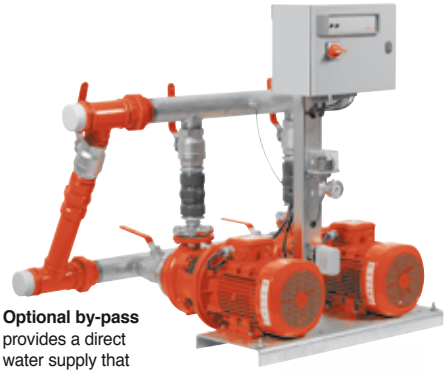

• **Optional by-pass** provides a direct water supply that does not pass through the pumps



• **Low-water float switch** for "B" version with storage tank

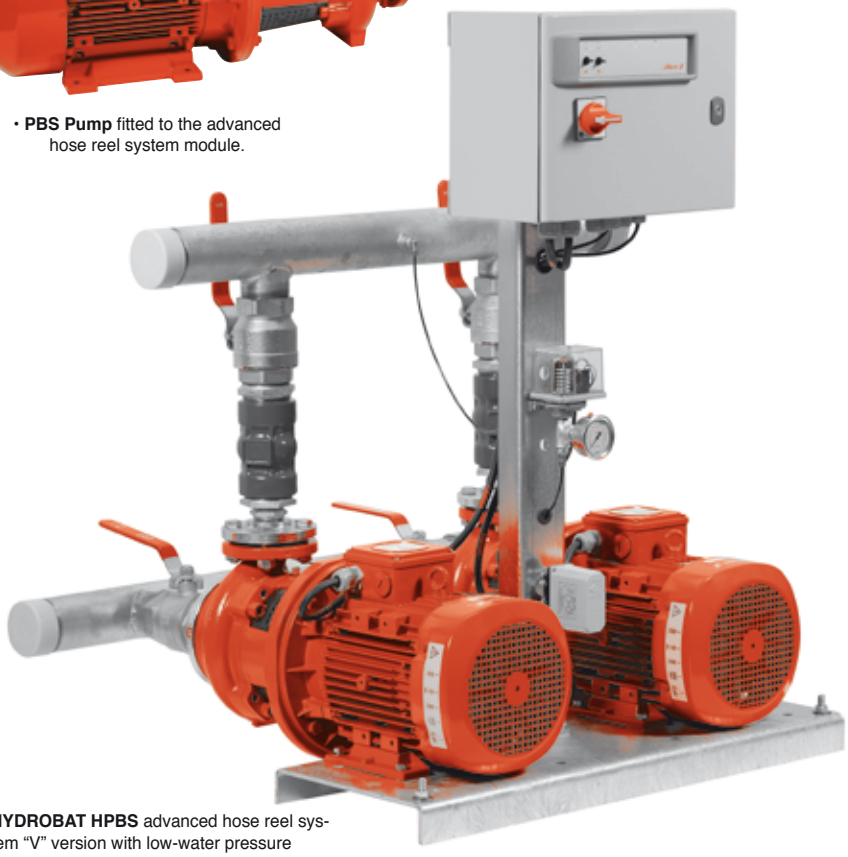

• **HYDROBAT HPBS** advanced hose reel system "V" version with low-water pressure switch for connection to mains water

HYDROBAT-HPBS

DESIGN

• Hydraulic part

- Single-stage centrifugal
- Flanged housing, axial intake and vertical discharge
- Flanges equipped with pressure taps
- Sealing by a standardised mechanical seal
- Dimensions of housing according to EN 733 (NFE 4411)

• Lantern ring

- Equipped with condensate collection holes in vertical and horizontal positions

• Motor

Standardised with flanges. Coupled to the pump by a rigid coupling

Speed :	2900 rpm
3~ winding ≤ 3 kW :	230 V Δ 50 Hz
	400 V Y 50 Hz
3~ winding ≥ 4 kW :	400 V Δ 50 Hz
Insulation:	Classe 155 (F)
Protection class:	IP55
EC conformity:	EN 809

Options: ipsothermal protection, 60 Hz, etc. (contact us for details)-

DESCRIPTION OF BOOSTER PUMP

• descriptif du module R.I.A.

1 - One-piece, horizontal PBS pumps
2 - Attachment support frame
3 - Automation and control box
4 - Suction pipe
5 - Collecteur de refoulement
6 - Automatic pump starting pressure switch
7 - Pressure gauge
8 - Low-water pressure switch (mains version)
9 - Bladder tank on pipe or supplied separately according to capacity
10 - Optional by-pass: provides direct supply without passing through pumps when there is sufficient mains water pressure (supplied connected when ordered)
11 - Capillary tube
12 - Flow switch for automatic stoppage of pumps

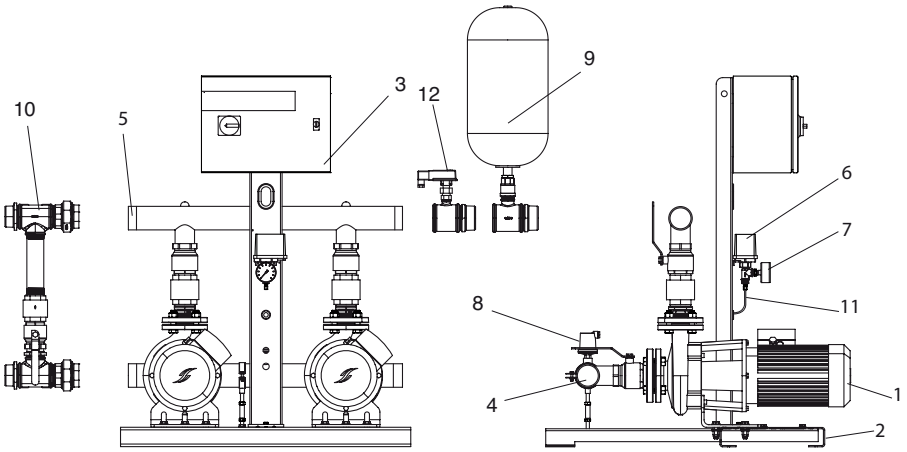

IDENTIFICATION

HPBS-40-160-5,5-V-T4-CPI

- Booster name
- DN Discharge port
- DN Impeller
- Motor power in kW
- Mandatory accessory :
  Low-water protection
  Water supply
  V: mains supply
  B: tank system
- Network voltage
  T4 : 3~400V
- CPI : insulation monitoring device

CONTROL CABINET (3)

- Ensures complete automation of the booster pump.
- Sealed, IP54 protection class
- Factory-preset thermal protection of motors at the rated current shown on the motor plate
- External isolating safety switch and for powering on the module
- Closure by lock and key

FRONT OF CABINET:

(not shown)

- Power on indicator
- Low water indicator
- Pump fault indicator per pump
- Operating indicator per pump
- Three-way switch per pump: auto / stop / manual (momentary) and general isolating switch.

BASIC CONSTRUCTION

Main parts	Material
Pump casing	Cast iron FGL250
Impeller	Cast iron FGL200 Bronze*
Lantern ring	Cast iron FGL250
Shaft	Stainless steel
Mechanical seal**	Graphite Si/EP carbide

NB :
* Options
** Contact us for details about other mechanical seals

HYDROBAT-HPBS

PBS* HYDRAULIC PERFORMANCE AT 2 900 RPM

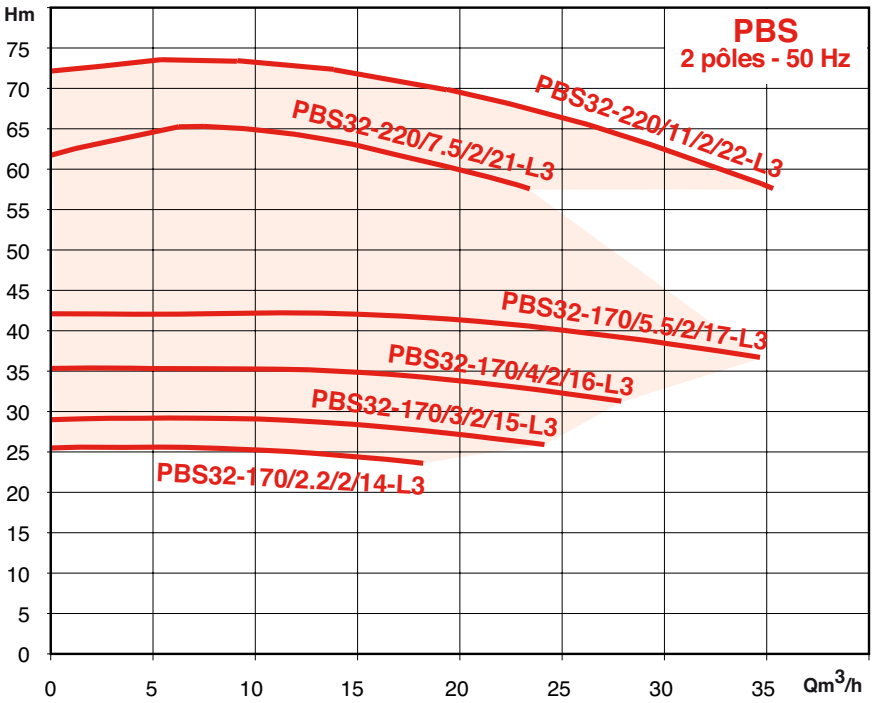

* contact us for details about other pumps

STANDARDS

- Conformity of Salmson electrically driven pump units intended for fire-fighting purposes:
- R.I.A. : Advanced hose reel systems
- NF S 62-201 fire-fighting equipment.

REGULATIONS

- R5- APSAD regulation: Advanced hose reel systems.

OPTION

CPI : Insulation Monitoring Device (mandatory for public-access buildings)

BOOSTER PUMP WATER SUPPLY

• **HPBS "B"** with header tank

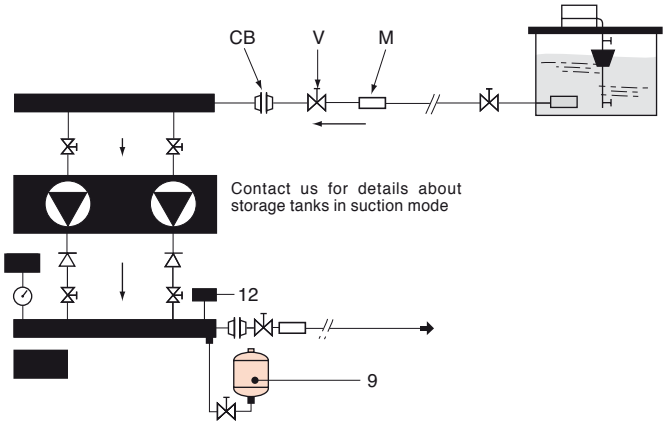

• **HPBS "V"** on mains water supply

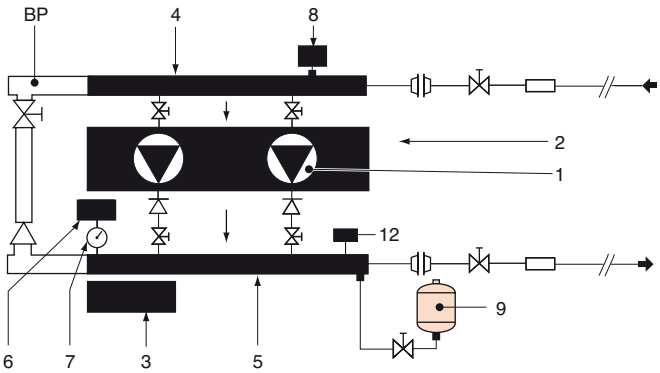

OPTIONAL EQUIPMENT (en supplément de prix)

BP - By-pass allowing for a direct water supply when there is sufficient mains water pressure, without the aid of the booster pump.

M - Vibration-damping sleeves (supplied in pairs).

V - Isolation valves for the module.

R - Single-bladder tank to replace the tank fitted to the module.*

When ordering, please specify:

The capacity and operating pressure.

NB : The tank is supplied unassembled.

HYDROBAT-HPBS

ELECTRICAL AND DIMENSIONAL CHARACTERISTICS

Tank option

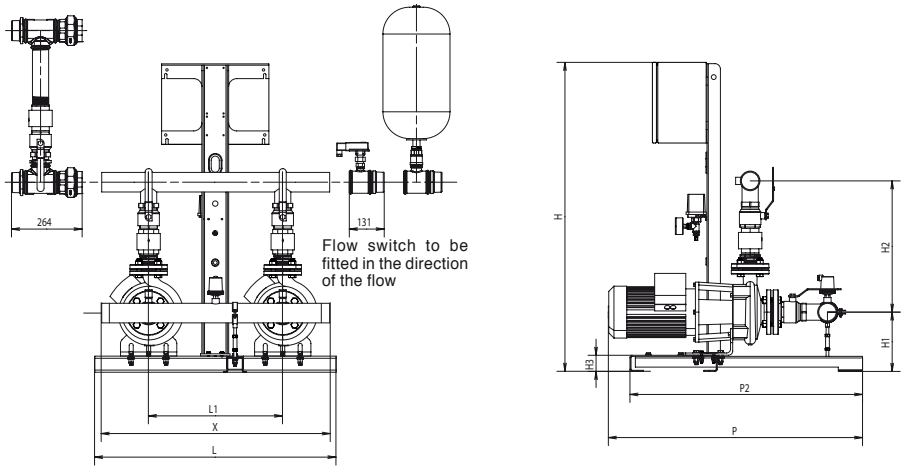

FEATURES

a) Electrical

- 400 V (T4) - 50 Hz three-phase modules.

All control devices are factory-connected.

Connections to be made in the cabinet: power supply to the isolating switch terminal block, and to the float switch if the module is to be connected to a storage tank.

b) Installation

- On a perfectly level floor.

Hydraulic connections:

- To suction and discharge pipes by tapped pipework.
- Unused ports shall be sealed by plugs or blind counter-flanges supplied with the booster pump.

c) Packaging

- Delivered on a pallet.

d) Maintenance

- Exchange or repair of elements known to be defective.
- Recommended spare wearing parts for pumps.

Désignation	Rated poser of motor kW	Rotation speed	Rated current (approx.)	DN	H	H1	H2	H3	L	L1	P	P1	P2	X	masse
	P2														
	kW	rpm	in A		mm	mm	mm	mm	mm	mm	mm	mm	mm	mm	kg
HPBS32-170-2,2-T4	2,2	2900	4,4	32	1150	220	488	60	900	500	884	288	865	850	150
HPBS32-170-3-T4	3	2900	5,8	32	1150	220	488	60	900	500	949	288	865	850	164
HPBS32-170-4-T4	4	2900	7,7	32	1150	220	488	60	900	500	973	288	865	850	186
HPBS32-170-5,5-T4	5,5	2900	10,2	32	1150	192	488	60	900	500	913	288	918	850	216
HPBS32-220-7,5-T4	7,5	2900	13,7	32	1150	220	508	60	900	500	927	288	930	850	240
HPBS32-220-11-T4	11	2900	22	32	1380	192	508	60	900	500	1104	288	890	850	350
HPBS32-170-2,2-T4-CPI	2,2	2900	4,4	32	1150	220	488	60	900	500	884	288	865	850	156
HPBS32-170-3-T4-CPI	3	2900	5,8	32	1150	220	488	60	900	500	949	288	865	850	170
HPBS32-170-4-T4-CPI	4	2900	7,7	32	1150	220	488	60	900	500	973	288	865	850	192
HPBS32-170-5,5-T4-CPI	5,5	2900	10,2	32	1150	192	488	60	900	500	913	288	918	850	222
HPBS32-220-7,5-T4-CPI	7,5	2900	13,7	32	1150	220	508	60	900	500	927	288	930	850	246
HPBS32-220-11-T4-CPI	11	2900	22	32	1380	192	508	60	900	500	1104	288	890	850	356
HPBS40-140-3-T4	3	2900	6.1	40	1150	220	615	60	900	500	1095	355	884	950	214
HPBS40-140-4-T4	4	2900	7.8	40	1150	220	615	60	900	500	1119	355	884	950	228
HPBS40-170-5,5-T4	5,5	2900	10.3	40	1150	192	635	60	900	500	1061	355	861	950	266
HPBS40-220-7,5-T4	7,5	2900	13.8	40	1420	192	655	60	900	500	1101	375	1024	950	288
HPBS40-220-11-T4	11	2900	20	40	1420	220	655	60	900	500	1278	375	984	950	359
HPBS40-220-15-T4	15	2900	26.5	40	1150	220	655	60	900	500	1278	375	1024	950	381
HPBS40-140-3-T4-CPI	3	2900	6.1	40	1420	220	615	60	900	500	1095	355	884	950	214
HPBS40-140-4-T4-CPI	4	2900	7.8	40	1420	220	615	60	900	500	1119	355	884	950	228
HPBS40-170-5,5-T4-CPI	5,5	2900	10.3	40	1420	192	635	60	900	500	1061	355	861	950	266
HPBS40-220-7,5-T4-CPI	7,5	2900	13.8	40	1420	192	655	60	900	500	1101	375	1024	950	288
HPBS40-220-11-T4-CPI	11	2900	20	40	1420	220	655	60	900	500	1278	375	984	950	359
HPBS40-220-15-T4-CPI	15	2900	26.5	40	1420	220	655	60	900	500	1278	375	1024	950	381

Drainage - Sewage

Technical reminders **532**

Clear water pumps
- Subson **535**
- SHS-SBS **543**
- Aquaval **549**
- TP 2800 **559**
- S (pump) **563**
- GV **583**

Sewage pumps
- Mini SVO **587**
- SVO - SCA 205 - 206 **593**
- Rocsan lix **603**
- SCA 408-410 **613**
- Rocsan evo **623**
- UVO-UCA-UCB **633**

Pump with macerator
- Mini SDL **645**

Clear water lifting system
- Subsanit-2 **651**

Sewage water lifting systems
- Liftson S **655**
- Liftson M-L **659**
- Sanitson premium **665**

HOW TO SELECT A PUMP?

BOOSTER PUMPS

How to determine the flow rate

	Rain water			Domestic waste water		Full water		Waste water	
	Collection surface (m^2)			Number of inhabitants		Number of inhabitants		Number of inhabitants	
	15	30	70	4 to 6	7 to 10	4 to 6	7 to 10	4 to 6	7 to 10
Flow (m^3h)	3	6	12	5	6	7	8	8	9

Clear water: water with no or few suspended particles (rain water for example).
Domestic waste water: shower. sink, kitchen sink washing machine…
Foul water: toilet.
Waste water: toilet waste + household waste.

How to determine the pressure

Discharge lift:
Height at which it is necessary to make the water rise: slope between the water level and the evacuation level.
Friction losses (mWC):
Pressure drop caused by friction in the piping network.
Friction losses in the new pipes:
Expressed in m of water column per m of metal pipe.
For PVC pipes. take 80% of the values below.

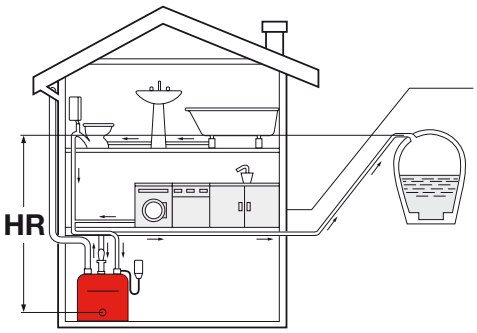

Nominal diameter of the pipes	FLOW M^3/H																		
	0.2	0.5	0.7	1	1.5	2	3	4	5	6	7	8	9	10	12	15	20	25	30	40
1/2"	0.015	0.100	0.200	0.400																
3/4"	0.003	0.020	0.040	0.080	0.170	0.330														
1"		0.005	0.010	0.024	0.050	0.090	0.210	0.320												
1 1/4"		0.001	0.002	0.005	0.010	0.020	0.045	0.076	0.130	0.170	0.250	0.330								
1 1/2"				0.002	0.005	0.009	0.022	0.035	0.060	0.080	0.120	0.140	0.190	0.230	0.330					
2"					0.001	0.003	0.006	0.010	0.018	0.025	0.035	0.045	0.057	0.070	0.100	0.150	0.260			
65							0.002	0.005	0.007	0.010	0.013	0.017	0.021	0.025	0.035	0.053	0.088		0.188	0.325
80								0.001	0.002	0.003	0.003	0.005	0.006	0.007	0.010	0.016	0.028	0.044	0.063	0.112
100												0.001	0.002	0.002	0.003	0.005	0.008	0.013	0.019	0.033
125															0.001	0.002	0.003	0.004	0.006	0.011
150																	0.001	0.002	0.002	0.004

PLEASE NOTE: the values in red are the flow rates in between 1 and 1.5 m/s.

Friction losses in accessories

Expressed in straight lengths (m) of equivalent pipe.
Example: 1 90° screw-in elbow. Ø 100, with the same head loss as 4 m of straight pipe with the same diameter.

	PIPE NOMINAL DIAMETER									
Accessories	25	32	40	50	65	80	100	125	150	200
Straisser foot valve	4	5	7	9	11	15	20	26	34	46
90° threaded elbow	1	1.3	1.6	2	2.6	3.2	4			
90° flange elbow				0.7	0.9	1.1	1.4	1.7	2.1	2.6
Screw-down stop valve	10	13	16	20	26	34	45			
Straight-through passage valve				0.5	0,6	0.7	0.9	1.1	1.4	1.8
Non return valve	6	7	8	10	10	10	12	15	18	24

Recommended pipe diameters

MAX FLOW (M^3/H)		PIPE DIAMETER
Suction	Discharge	
-	0.35	1/2" (15-21 mm)
0.7	0.8	3/4" (20-27 mm)
1.4	1.4	1" (26-34 mm)
2.7	3.0	1 1/4" (33-42 mm)
4.2	4.5	1 1/2" (40-49 mm)
7.3	8.0	2" (50-60 mm)
13.5	16.0	65 mm
21.0	25.0	80 mm
36.0	46.0	100 mm

BOREHOLE PUMPS

Discharge head
+
Friction losses
=
Total dynamic head

SELECTION GUIDE

Drainage

This selection guide can be used as an initial technical approach, but absolutely not supersedes a technical specific study

				Rain water		
				Surface		
	Discharge head	Discharge length	Power supply	15 m²	30 m²	70 m²
Rain water	from 2 to 8 m	from 5 to 10 m	Mono	Subson 10MF	Subson 10MF	Subson 10MF
			Tri	x	x	x
	3 m	from 15 to 30 m	Mono	Subson 10MF	Subson 20MF	Subson 30MF
			Tri	x	x	x
	4 m	from 5 to 10 m	Mono	Subson 10MF	Subson 20MF	Subson 30MF
			Tri	x	x	x
	4 m	from 15 to 30 m	Mono	Subson 20MF	Subson 20MF	Subson 30MF
			Tri	x	x	x
	5 m	from 5 to 15 m	Mono	Subson 20MF	Subson 20MF	SBS 2 204-0,45MF
			Tri	x	x	SBS 2 204-0,45T
	5 m	from 20 to 30 m	Mono	Subson 20MF	Subson 20MF	SBS 2 204-0,45MF
			Tri	x	x	SBS 2 204-0,45T
	7 m	from 10 to 30 m	Mono	Subson 30MF	Subson 30MF	SBS 2 204-0,90M
			Tri	x	x	SBS 2 204-0,90T

				Domestic waste water	
				Number of people	
	Discharge head	Discharge length	Power supply	4 to 6	7 to 10
Domestic waste water	from 2 to 3 m	from 5 to 20 m	Mono	Subson 10MF	Subson 20MF
			Tri	x	x
	3 m	30 m	Mono	Subson 20MF	Subson 20MF
			Tri	x	x
	4 m	from 5 to 15 m	Mono	Subson 20MF	Subson 20MF
			Tri	x	x
	4 to 5 m	from 5 to 30 m	Mono	Subson 20MF	Subson 30MF
			Tri	x	x
	7 m	from 10 to 20 m	Mono	Subson 30MF	Subson 30MF
			Tri	x	x
	7 m	30 m	Mono	Subson 30MF	SBS 2 204-0,90M
			Tri	x	SBS 2 204-0,90T

				Waste water	
				Number of people	
	Discharge head	Discharge length	Power supply	4 to 6	7 to 10
Waste water	from 2 to 3 m	from 5 to 30 m	Mono	Mini-SVO 204-0.6MF/B	Mini-SVO 204-0.6MF/B
			Tri	Mini-SVO 204-0.5T4/B	Mini-SVO 204-0.5T4/B
	4 m	from 5 to 30 m	Mono	Mini-SVO 204-0.6MF/B	Mini-SVO 204-0.6MF/B
			Tri	Mini-SVO 204-0.5T4/B	Mini-SVO 204-0.5T4/B
	5 m	from 5 to 10 m	Mono	Mini-SVO 204-0.6MF/B	Mini-SVO 204-0.6MF/B
			Tri	Mini-SVO 204-0.5T4/B	Mini-SVO 204-0.5T4/B
	5 m	from 15 to 30 m	Mono	Mini-SVO 204-0.6MF/B	Mini-SVO 204-0.6MF/B
			Tri	Mini-SVO 204-0.5T4/B	Mini-SVO 204-0.5T4/B
	7 m	from 10 to 15 m	Mono	SVO 206-1.1M	SVO 206-1.5M
			Tri	SVO 206-1.1T4	SVO 206-1.5T4
	7 m	from 20 to 30 m	Mono	SVO 206-1.5M	SVO 206-1.5M
			Tri	SVO 206-1.5T4	SVO 206-1.5T4
	10 m	from 10 to 30 m	Mono	SVO 206-2.2M	SVO 206-2.2M
			Tri	SVO 206-2.2T4	SVO 206-2.2T4

SUBSON

SUBMERSIBLE PUMPS
Domestic clean water
50 Hz

OPERATING RANGES

Flow rates of up to:	**16 m³/h**
Manometric heads of up to:	**11 m**
Temperature range:	**+3 at +35°C (90°C<3 min)**
Maximum particle size:	**Ø 10 mm***
ND of delivery port :	**1" and 1 1/4"**

* except for Subson AB models

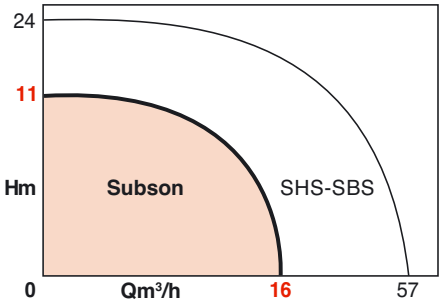

APPLICATIONS

- Cellar drainage
- Removal of infiltration water
- Drainage of boiler room or basin sumps
- Lift-pumping of wastewater not containing fats or fibrous materials, originating from :
  - washing machine, dishwasher
  - wash basin, shower, etc…

SUBSON "A" corrosive water version:
- discharge from water softeners
- seawater
- brackish water
- treated swimming pool water, etc...

BENEFITS

- **Stainless steel version for intensive use.**
- **AB version for optimal water suction.**
- **Automatic operation by adjustable float switch (except for 20 MP version).**
- **Oil chamber insulated by a double seal for continuous operation.**
- **High starting torque.**
- **Corrosion-resistant components**
- **Pumps supplied ready to pump.**
- **SAN system to prevent clogging of the strainer.**



• **SUBSON AB**



• **SUBSON Premium stainless steel**



• **SUBSON 10 MF - SUBSON 20 MF - SUBSON 30 MF**
20 MF and 30 MF versions equipped with a non-return valve and a "SAN" self-cleaning system (patented)

SUBSON

DESIGN

• Hydraulic part

- One-piece, common-shaft, motor-driven pump.
- Vertical discharge.
- Semi-open impeller.
- Shaft opening sealed by a mechanical seal in the oil chamber and by a lip seal.
- Max. submergence depth:
  - SUBSON : 3m
  - SUBSON Premium : 10m

• Motor

- Single-phase, permanent capacitor.
- Self-cooled by the pumped liquid.
- Integrated thermal protection; automatic resetting after cooling of motor.
- Bearings lubricated for life.
- Automatic On-Off float control switch (except for SUBSON 20 MP).

Speed :	2900 rpm
Single-phase winding:	230 V
Frequency:	50 Hz (60 Hz on request)
Insulation class:	SUBSON 155 (F) SUBSON Premium (B)
Protection class:	IP 68

SPECIAL FEATURES OF SUBSON PREMIUM

- Impact-resistant, stainless steel design.
- Overdesigned motor and bearings for intensive use (up to 4,000 hours/year).
- Exchangeable electrical cable.

BASIC CONSTRUCTION

Main parts	Material	
	SUBSON	SUBSON Premium
Pump housing	Polypropylene 30%FG	Stainless steel 304
Strainer	Polypropylene 30%FG	Stainless steel 304
Impeller	Noryl	SPS composite
Shaft	AISI 430F	AISI 316
Motor housing	AISI 304	
Fastenings	AISI 304	
Garniture mécanique	Carbone/Alumine	Carbon/Ceramic
Cable	H07RN-F	
"Corrosive water" version		
Shaft	AISI 316 L	
Motor housing	AISI 316 L	
Fastenings	AISI 316	
Suction cover	AISI 316 L	

OPERATING PRINCIPLE

• SAN system (patented)

the particles are agitated by the recycling of the pumped water, which cleans out the sump and prevents clogging of the pump.

- Operating safety: no clogging of the strainer.
- Particles are kept in suspension and pumped out.
- Reduction of odours caused by deposited particles.

The SAN system can be deactivated. The pump curve thus gains an additional metre of head for the same flow rate.

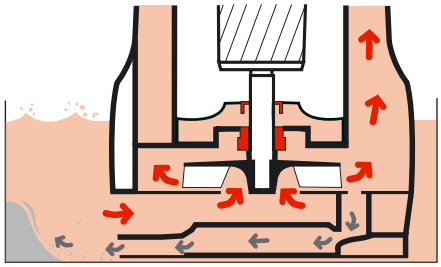

• Version AB

SUBSON AB pumps are equipped with a strainer designed to optimise suction down to a residual water level of 2 mm.

- Optimal draining of flooded areas.
- Product supplied ready to pump - no tools required.

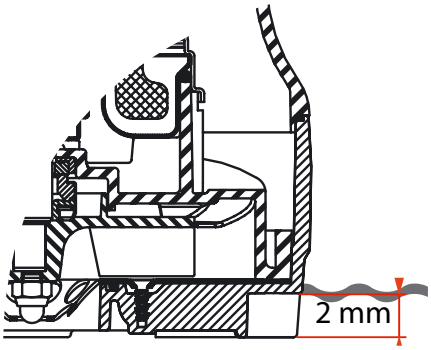

IDENTIFICATION

SUBSON Premium S 20 MFP-A

- SUBSON: Clean water lift pump family
- Stainless steel version
- SAN system
- 20: Size guide value
- M: 1~230 V single-phase
- F: Supplied with float switch
- P: Portable version (10 m of cable)
- A: Version for corrosive water

SUBSON AB 20 MFP-A

- SUBSON : Clean water lift pump family
- Version with low suction
- 20 : Size guide value
- M : 1~230 V single-phase
- F : Supplied with float switch
  nothing: Without float switch
- P : Portable version (10 m of cable)
  nothing: Portable version (3m of cable
- A : Version for corrosive water

INSTALLATION DIAGRAM: SUBSON FIXED SUMP PUMP

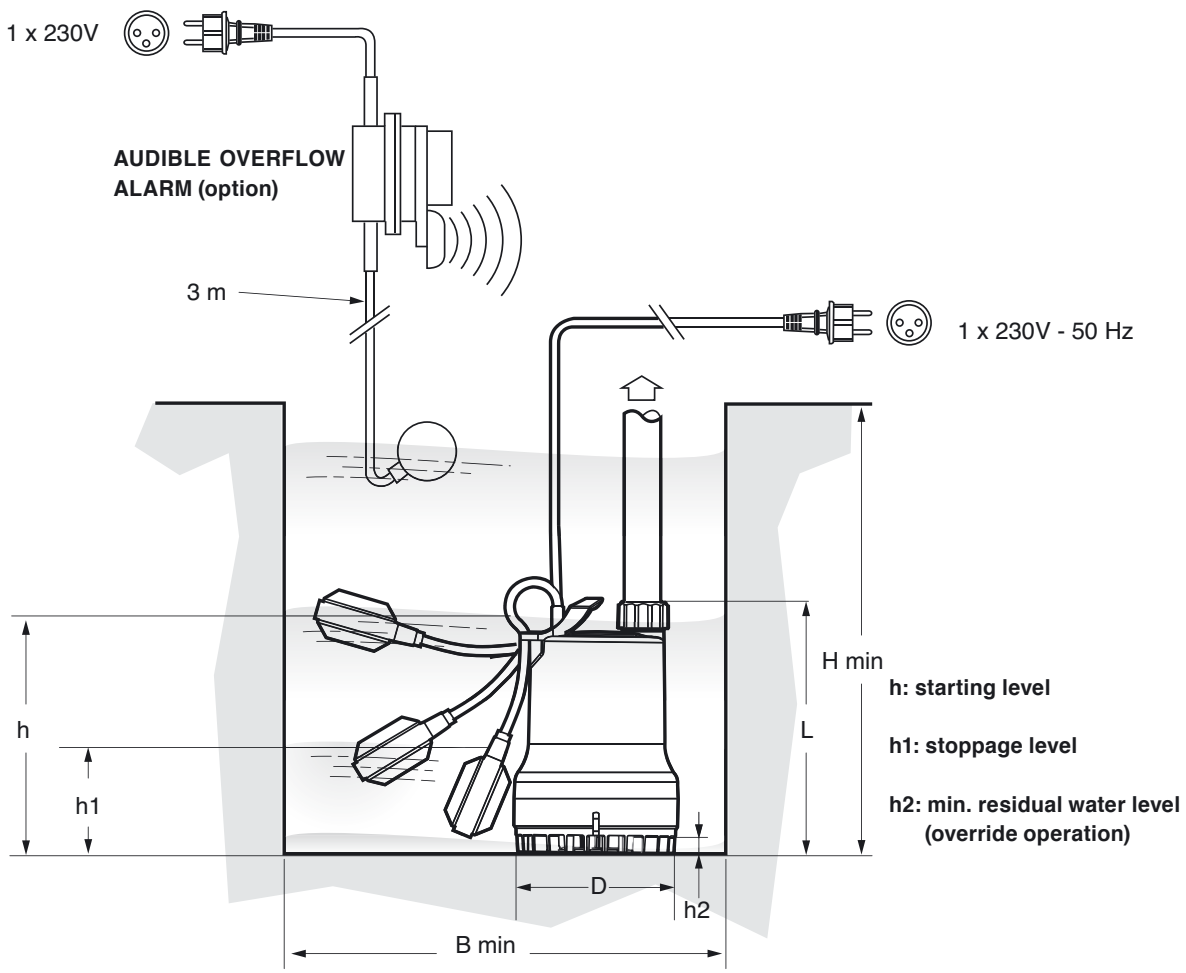

Type	H min	L	D	B min	h max	h1 min	h2 min
	mm	mm	mm	mm	mm (adjustable)	mm	mm
SUBSON PREMIUM S 20	400	290	161	400 x 400	350	140	24
SUBSON PREMIUM S 30	400	310	161	400 x 400	360	140	24
SUBSON 10	280	294	165	350 x 350	237	50	14
SUBSON 20	280	296	165	350 x 350	250	50	14
SUBSON 30	330	326	165	350 x 350	280	50	14
SUBSON AB 20	280	278	165	350 x 350	250	50	2
SUBSON AB 30	330	308	165	350 x 350	280	50	2

SUBSON

SUBSON AND SUBSON PREMIUM HYDRAULIC PERFORMANCE AT 2900 RPM

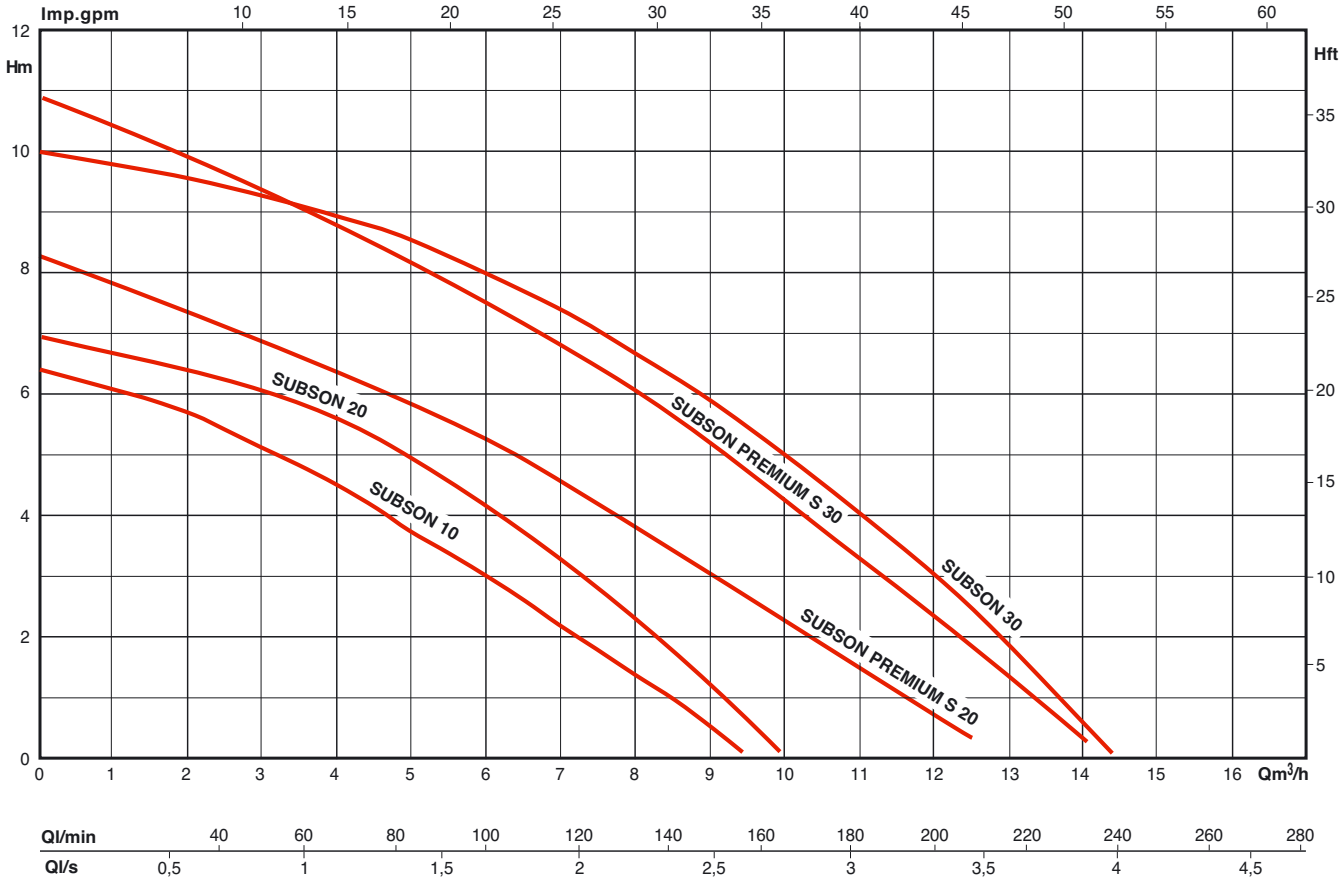

ELECTRICAL SPECIFICATIONS

ORDER REFERENCE	MOTOR P2	MOTOR P1	MOTOR I 1x230V	PUMP Cable lenght	PUMP SAN system	Net weight
	kW	kW	A	m		kg
SUBSON PREMIUM S 20	0.3	0.5	2.2	10	yes	6.8
SUBSON PREMIUM S 30	0.6	0.9	3.6	10	yes	7.8
SUBSON 10 MF	0.25	0.32	1.4	3	no	3.6
SUBSON 20 MP	0.37	0.50	2.2	10	no	5.6
SUBSON 20 MF	0.37	0.45	2.1	3	yes	4.7
SUBSON 20 MFP	0.37	0.45	2.1	10	yes	5.2
SUBSON 30 MF	0.55	0.75	3.6	3	yes	6.1
SUBSON 30 MFP	0.55	0.75	3.6	10	yes	6.9
SUBSON 30 MFP-A	0.55	0.75	3.6	10	yes	6.7

SUBSON AB HYDRAULIC PERFORMANCE AT 2900 RPM

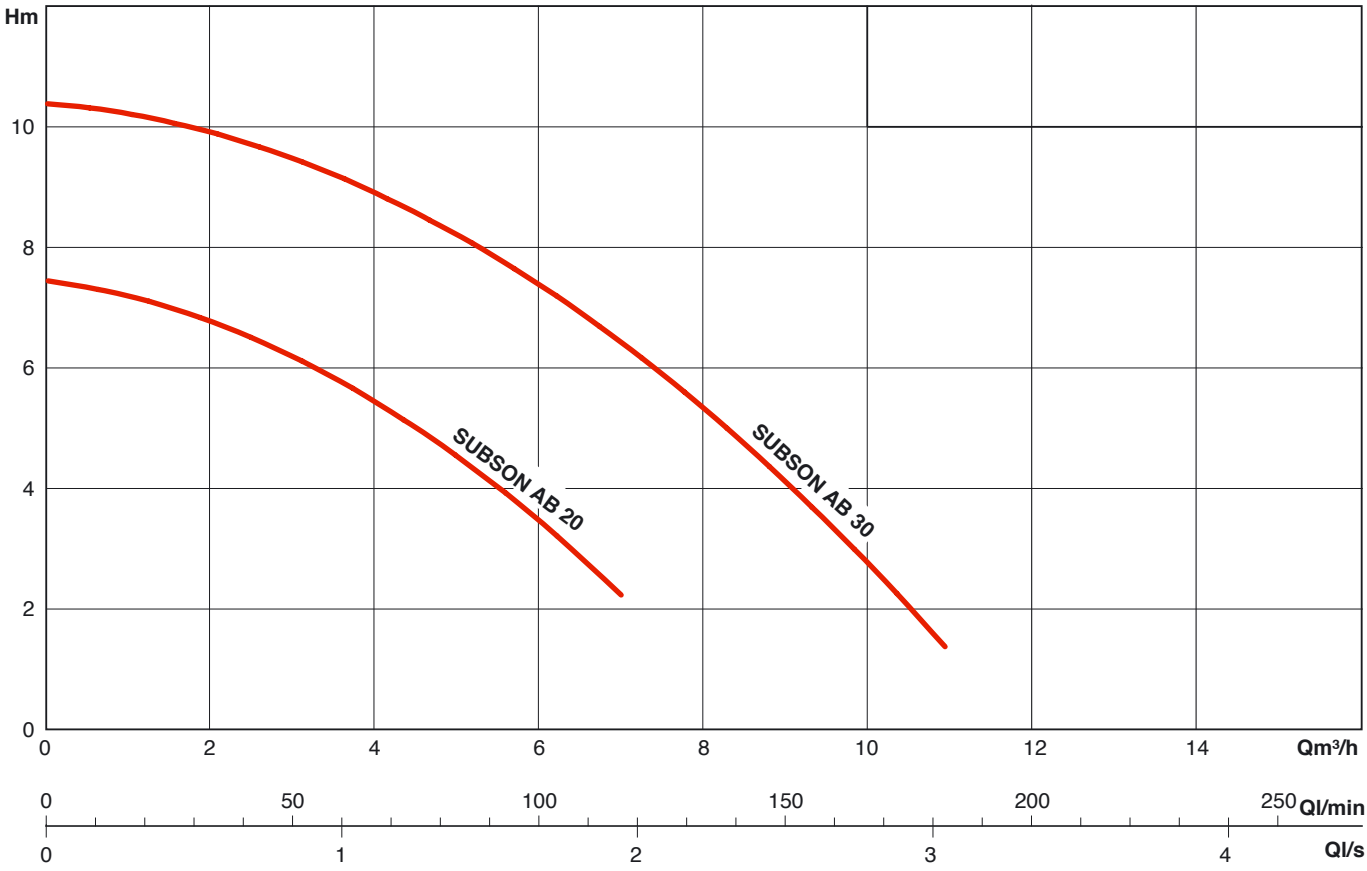

ELECTRICAL SPECIFICATIONS

ORDER REFERENCE	MOTOR P2	MOTOR P1	MOTOR I 1x230V	PUMP Cable lenght	PUMP SAN system	PUMP Net weight
	kW	kW	A	m		kg
SUBSON AB 20 MF	0.37	0.45	1.8	3	no	4.9
SUBSON AB 20 MFP	0.37	0.45	1.8	10	no	5.5
SUBSON AB 30 MF	0.55	0.75	3.2	3	no	6.2

SUBSON

SECTIONAL DIAGRAM SUBSON 20

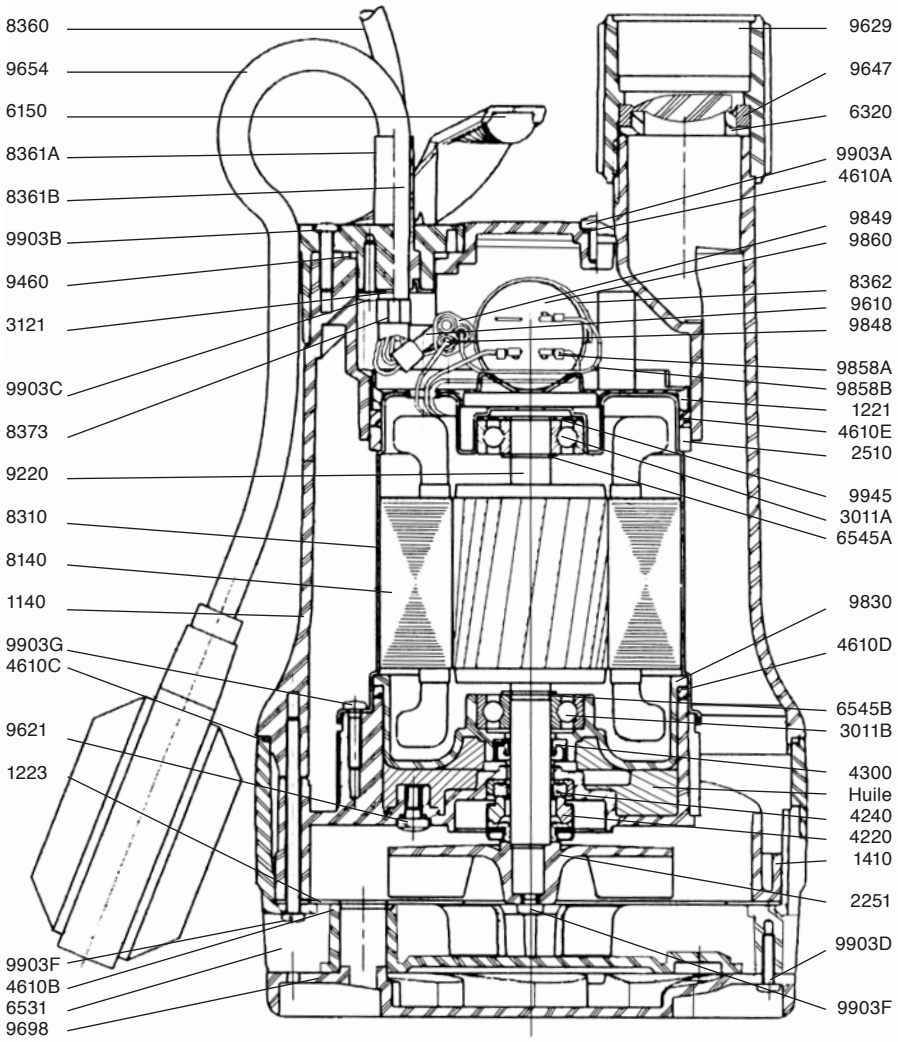

PARTS LIST:

- 1140 - Discharge housing
- 1221 - Insulating cover
- • 1223 - Cover
- 1410 - Diffuser
- • 2251 - Semi-open impeller
- 2510 - Retaining ring
- 3011A - Upper bearing
- 3011B - Lower bearing
- • 3121 - Retaining clamp
- 4220 - Mechanical seal mobile disc pad
- 4240 - Mechanical seal throat bushing
- 4300 - Lip seal ring
- 4610A - O-rings Ø3,69xØ1,78
- • 4610B - O-rings Ø14xØ2
- • 4610C - O-rings Ø155xØ2
- 4610D-E - O-rings Ø3,53xØ88,5-Ø88xØ4
- •6150 - Handle
- 6320 - Valve seat
- • 6531 - Suction strainer
- 6545A - Upper circlip
- 6545B - Lower circlip
- 8140 - Stator
- 8310 - Can
- • 8360 - Power cable with plug
- • 8361A - Cable guard (floater cable)
- • 8361B - Cable guard (power cable)
- • 8362 - Jumper
- • 8373 - Pressure ring
- 9220 - Rotor shaft
- • 9460 - Handle gasket
- • 9610 - Terminal protection cover
- 9621 - Plug
- 9629 - Female-female threaded coupling 1"1/4
- 9647 - Valve
- • 9654 - floater cable
- 9698 - Self-cleaning system
- 9830 - Front motor shroud
- 9848 - Male electrical connector
- • 9849 - Female electrical connector
- 9858A - Capacitor electrical wire
- 9858B - Main electrical wire
- 9860 - Capacitor
- 9903A-B-C-D - screws
- • 9903E - Strainer fixing screw
- • 9903F - Impeller fixing screw
- 9903G - Can fixing screw
- 9945 - Spring washer

•Wearing parts included in spare parts kits.

Subson spare parts kits

Designation	Identifier
Strainer kit	6531 - 4610C - 4610b - 9903e
Hydraulic kits (One per pump size)	2251 - 9903F - 4610c - 1223
Cable-handle-float switch kit	Set fully assembled in the factory, including: floater cable (9654), connector (3121 - 8361a - 8361b - 8362 - 8373 - 9460 - 9610 -9849), handle (6150), and 3 m long power cable (8360)
Cable-handle kit	Set fully assembled in the factory, including: handle (6150), connector (3121 - 8361b - 8362 - 8373 - 9460 - 9610 - 9849), and 10 m long power cable (8360)

SECTIONAL DIAGRAM SUBSON PREMIUM

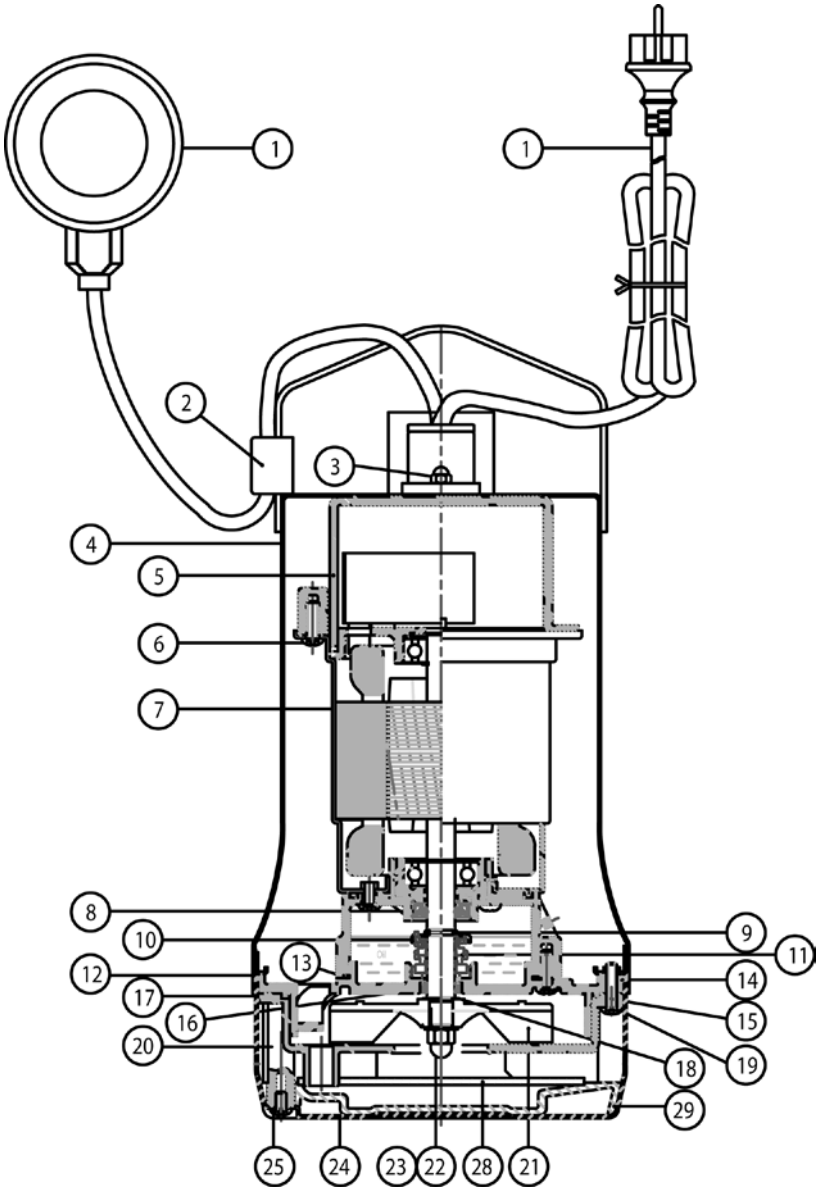

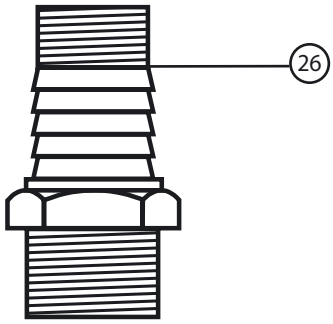

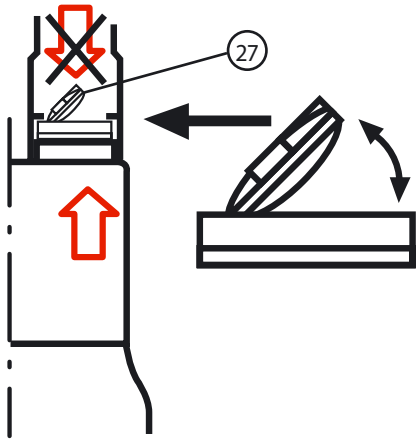

PARTS LIST:

Pos. - Description of components

- 1 - Cable and float switch
- 2 - Retaining clip for float switch
- 3 - Cap nut
- 4 - Housing
- 5 - Upper motor cover
- 6 - Screw
- 7 - Motor housing
- 8 - Shaft seal ring
- 9 - Safety ring
- 10 - Washer
- 11 - Mechanical seal
- 12 - Gasket
- 13 - O-ring
- 14 - Sealing body
- 15 - Screw
- 16 - Shaft seal ring
- 17 - O-ring
- 18 - Support ring
- 19 - Screw
- 20 - Pump housing
- 21 - Impeller
- 22 - Washer
- 23 - Cap nut
- 24 - Suction strainer
- 25 - Screw
- 26 - Ø32mm/R1 pipe union
- 27 - Non-return valve
- 28 - Intermediate plate
- 29 - SAN strainer

• Wearing parts included in spare parts kits.

Subson Premium spare parts kits

Designation	Identifier
Mechanical seal kit	8 - 9 - 10 - 11 - 12 - 13 - 15 - 16 - 17 - 18 - 19 - 22 - 23 - 25
D.98 Impeller kit subson 20	17 - 18 - 19 - 21 - 22 - 23 - 25
D.98 Impeller kit + SAN subson 20 strainer	17 - 18 - 19 - 21 - 22 - 23 - 25
D.98 Impeller kit D.98 subson 20	17 - 18 - 19 - 20 - 21 - 22 - 23 - 24 - 25 - 28 - 29
D.108 Impeller kit D.108 + SAN subson 30 strainer	17 - 18 - 19 - 20 - 21 - 22 - 23 - 24 - 25 - 28 - 29
Splined end + non-return valve kit	26 - 27
10 m cable + float switch kit	1 - 2 - 3

SUBSON

DIMENSIONAL SPECIFICATIONS

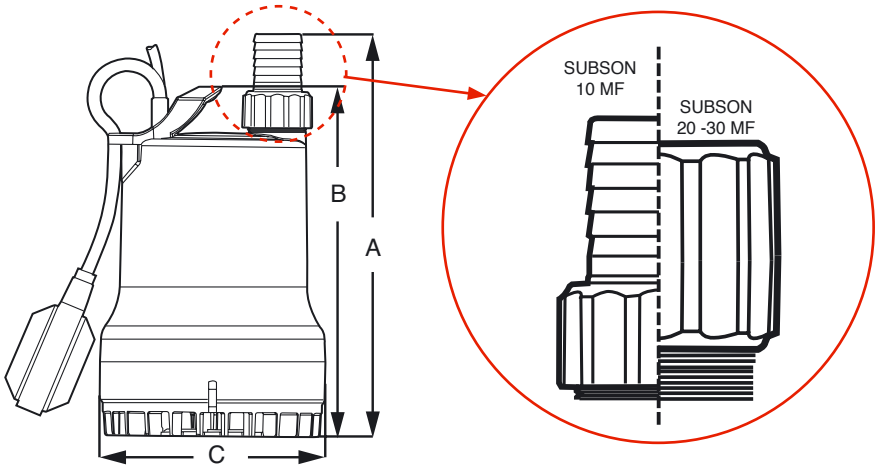

• SUBSON 10 - 20 - 30 MF and SUBSON AB 20 - 30

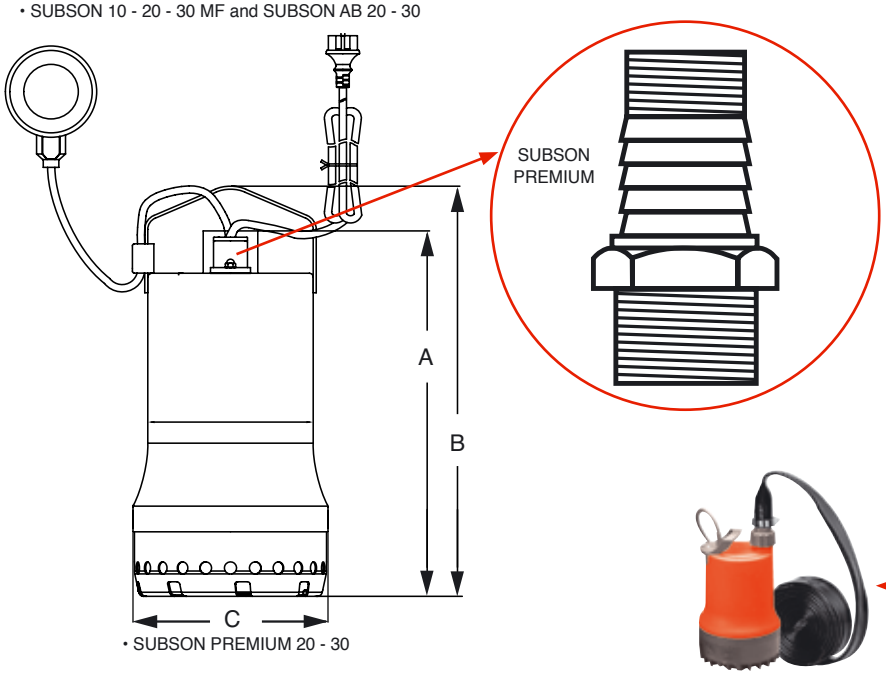

• SUBSON PREMIUM 20 - 30

ORDER REFERENCE	ND discharge	A	B	C	Accessories supplied
		mm	mm	mm	
SUBSON PREMIUM 20	G1"1/4	290	330	161	splined end Ø30
SUBSON PREMIUM 30	G1"1/4	310	350	161	+ clapet anti-retour
SUBSON 10 MF	25 mm	294	255	165	splined end Ø25
SUBSON 20 MP	G1"1/4	296	268	165	splined end Ø35
SUBSON 20 MF	G1"1/4	296	268	165	non-return valve*
SUBSON 20 MFP**	G1"1/4	296	268	165	non-return valve*
SUBSON 30 MF	G1"1/4	326	298	165	non-return valve*
SUBSON 30 MFP**	G1"1/4	326	298	165	non-return valve*
SUBSON 30 MFP-A	G1"1/4	326	298	165	non-return valve*
SUBSON AB 20 MF	G1"1/4	278	250	165	non-return valve*
SUBSON AB 20 MFP	G1"1/4	278	250	165	non-return valve*
SUBSON AB 30 MF	G1"1/4	308	280	165	non-return valve*

Submerged and dry S1; * or 1"1/4 threaded insert with non-return valve

FEATURES

a) Electrical

- 230 V - 50 Hz single phase with integral permanent capacitor and thermal protection; motor protection is not essential. (60 Hz on request)
- Connection to power supply by standardised 2 pins + earth plug.

NB:
It is preferable to implement a protective or warning system for protection against dry running, blockages or excessive starts.

b) Fitting

- Axis of motor always vertical.

Connection to the system:

- by flexible hose (see discharge kit) or rigid pipe in a fixed installation.

c) Packaging

- Pumps supplied ready to use, pre-wired with an electrical plug, handle and float switch (except for SUBSON 20MP).

Depending on the models, the pumps are supplied with a non-return valve and/or a splined end (see table on p.4).

d) Maintenance

See spare parts kit table.

ACCESSORIES

- **Shut-off valve**
- **PVC or fabric-reinforced piping.**
- **Discharge kit.**

SUBSON 10: Ø 25 mm flexible hose – 5 m long and one hose clamp.
SUBSON 20 & 30: Ø 35 mm flexible hose - 5 m long - one Ø 1$^{1/4}$" male connector and one hose clamp.

Order reference	Item reference
KIT SUBSON 10	021308
KIT SUBSON 20 & 30	019389

- **Audible overflow alarm.**

For fixed sump pump installation.

- 230V - 50 Hz single-phase.
- EUROFLOT 423 or NIVO430 mercury-free float switches, to be fitted.
- Direct connection via a standardised male plug 2 pins + earth. (Please contact us).

OPERATING LIMITS

Flow rates up to:	**57 m³/h**
Head up to:	**24 m CL**
Liquid temperature range:	**+3° to +35°C***
Specific gravity of liquid:	**1.05 max.**
pH of liquid:	**6-11**
Max. immersion depth:	**10 m**
Max. particle size:	**Ø 10 mm**
ND of discharge port:	**50-65**

*+ 60°C for 5 minutes

SHS-SBS

SUBMERSIBLE PUMPS
For clear water
2 pole serie, 50 Hz

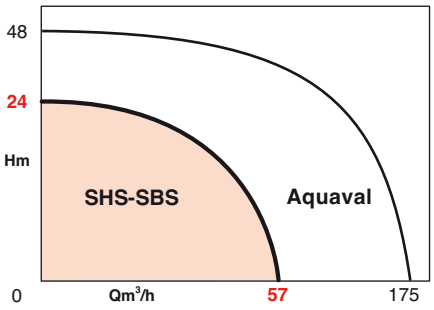

APPLICATIONS

Lifting of clear water or water containing a little particulate matter:

- seepage water
- rainwater
- parking-lot runoff water
- ornamental pool water
- cellar pump
- emptying of boiler-plant sump.

ADVANTAGES

- **Explosion-proof motor, eliminates all accident risk in an explosive environment.**
- **Operating reliability: oil-filled intermediate chamber to ensure perfect seal to prevent infiltration of water into motor.**
- **304 stainless steel and composite material for corrosion resistance and greater pump reliability.**
- **Ring protecting mechanical seal.**
- **Pumps with high- and low-pressure semi-open impellers.**



SHS-SBS

DESIGN

• Hydraulic part

- Centrifugal, single-stage.
- Axial suction under casing, vertical discharge through tapped port.
- Oil-filled intermediate chamber between pump and motor.

Two versions according to type of impeller:

• SHS: high pressure, for large discharge head.
• SBS: low pressure, for large flow.

• Motor - ATEX (94/9/CE)*

- Submersible, direct starting.
- Explosion-proofing certified EEx d IIB T4, some versions.
- Shaft guid bearing lubricated for life.
- HO 7RN-F power cable 10 m long, 4 conductors.
- Single-phase motor with thermal protection by built-in probe, automatic reset, with capacitor built into junction box (not explosion-proof) supplied with the pump.

Rotation speed :	2900 rpm
Windings, 3-phase :	400 V (T4)
1-phase :	230 V (M)
Frequency :	50 Hz
	(60 Hz optional)
Insulating category :	155 (F)
Protection index :	IP 68 (up to 10 m)

* ATEX: SBS 205-T4 / SHS 205-T4 / SBS 206-T4

STANDARD CONSTRUCTION

Main parts	Material
Suction end	304 stainless steel
Impeller	composite material
Shaft	316 L stainless steel
Pump casing	composite material
Motor casing	304 stainless steel
Mechanical seal	Si carbide/Si carbide/nitrile
Motor flange	304 stainless steel
Bolting	304 stainless steel
Degassing check valve	Nitrile

SECTIONAL VIEW

• SHS-SBS 205

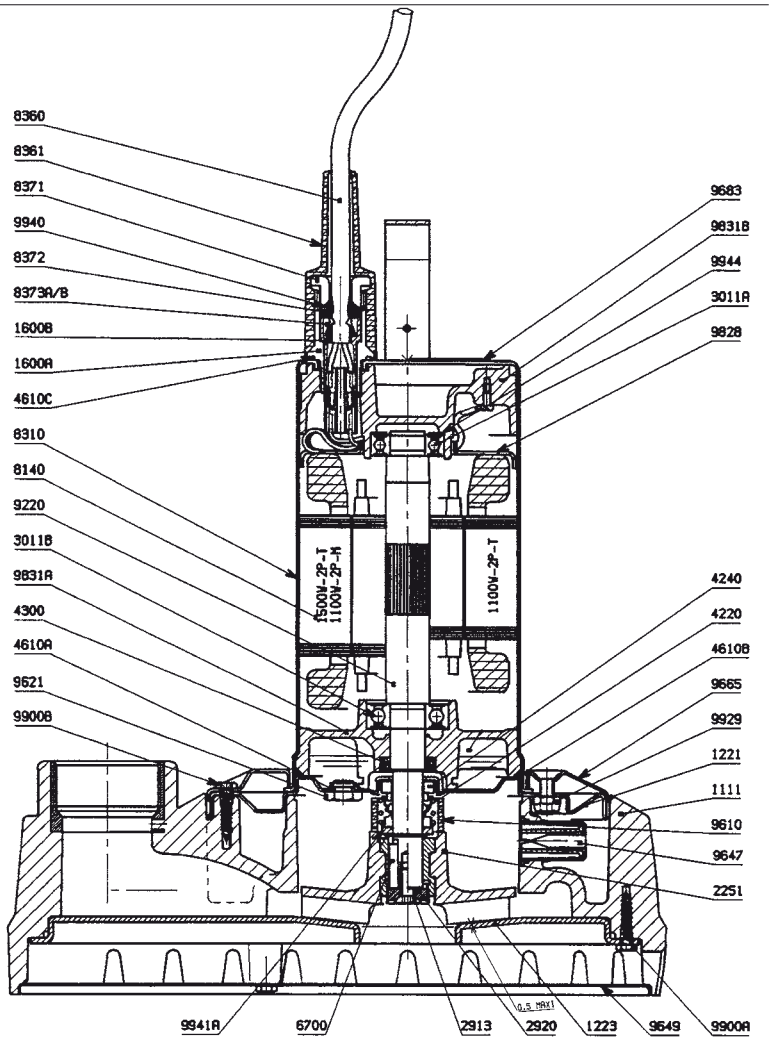

IDENTIFICATION

SHS 205-1.1 T4

Submersible pump code

impeller codes:
H : high-pressure
B : low-pressure
S : semi-open

2-pole motor

disch. port DN in cm

motor power P2 in kW

T4 : 3-phase 400 V
M : 1-phase 230 V
T2 : 3-phase 230 V (Export only)



PARTS LIST

1111 - Pump casing
1221 - Motor end
1223 - Suction end
1600A - Packing box socket
1600B - Contact holder
• 2251 - Semi-open impeller
2913 - Impeller attachment screw
2920 - Adjustment screw
• 3011A - Upper ball bearing
• 3011B - Lower ball bearing
• 4220 - Rotating part, Fixed part } Mechanical seal
• 4300 - Lip sealing ring
• 4610A - O-ring under plug 9621
• 4610B - O-ring, casing
• 4610C - O-ring, sleeve 8361
• 6545A - Impeller thrust circlip
• 6700 - Key
• 8140 - Stator
8310 - Motor casing
• 8360 - Power cord, H07RNF
8361 - Cable sleeve
8371 - Packing-box nut
8372 - Packing-box seal
8373A - Cord clamping cone
8373B - Anchor ring
• 9220 - Shaft-rotor
9610 - Mechanical seal protector
9621 - Oil chamber plug
9629 - Coupling
9646 - Check valve
• 9647 - Degassing check valve
9649 - Strainer plate
9665 - Motor flange
9683 - Motor plate
9828 - Stator cup
9831A - Lower bearing
9831B - Upper bearing
9900A - Screw
/B/C - Screw
9929 - Nylstop nut under motor end
9940 - Packing-box nut
9941A - Thrust washer, mechanical seal
9942 - Toothed cup washer
9944 - Spring washer

• Recommended spare parts

HYDRAULIC PERFORMANCES AT 2900 RPM

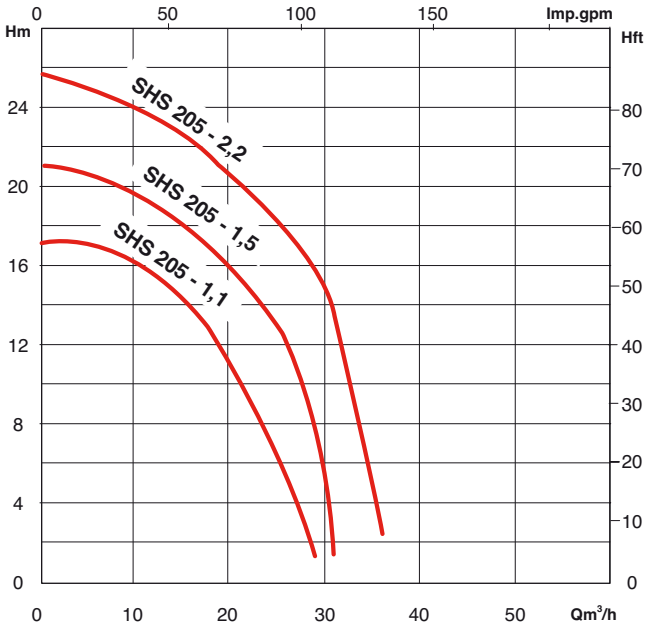

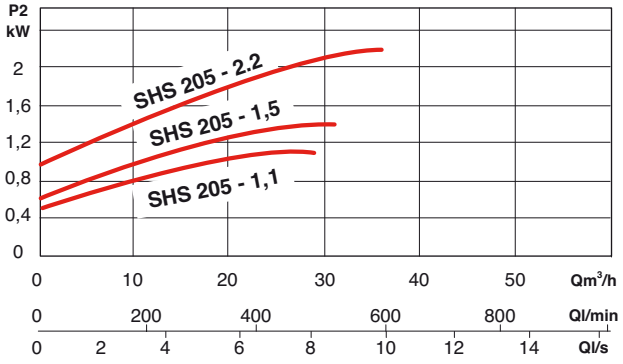

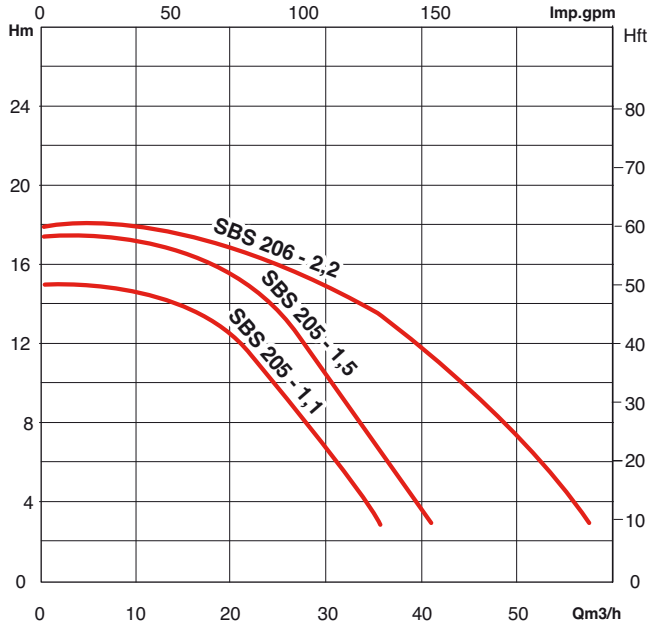

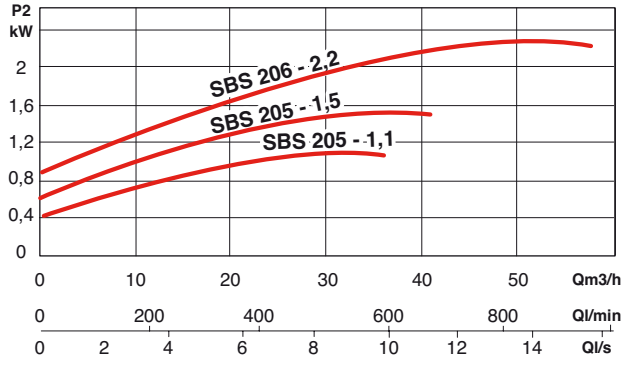

SHS-SBS

INSTALLATION DIAGRAMS

• Simplified installation

One pump with single-phase motor, in sump, with float switch, Junction box, and audible overflow alarm.

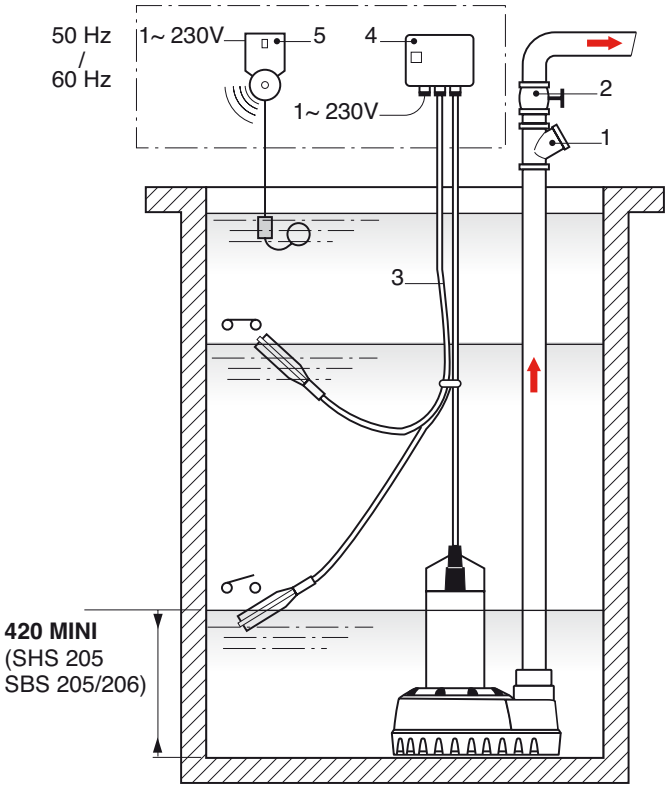

1 - Check valve.
2 - Isolating valve.
3 - Pump On/Off float switch.
4 - Junction-capacitor box (single-phase motor).
5 - Audible overflow alarm (single-phase motor).
6 - Level regulators with counterweights and cable 10 m long (or IPAE).
7 - Wall bracket for regulator cables.
8 - Yn4000 control and protection panel (or Yn5000E for explosionproof installation, with IPAE switch).
9 - Motor power cord, 10 m long.
10 - Two-pump pairing pipe.

• Standard installation

One or two pumps (single- or three-phase) in parallel, joined by Pairing pipe, with control and protection box and 3 or 4 level Regulators (for one or two pumps, respectively).

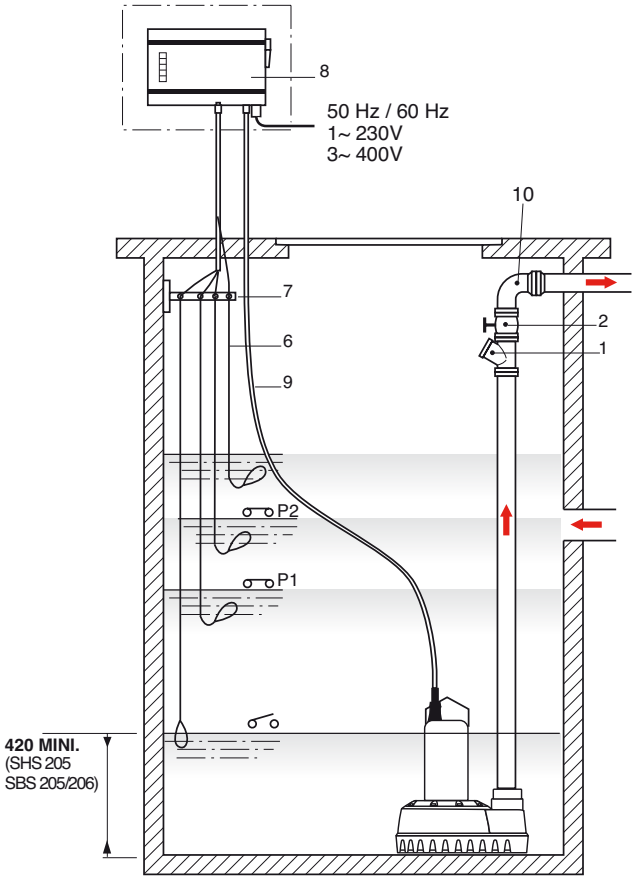

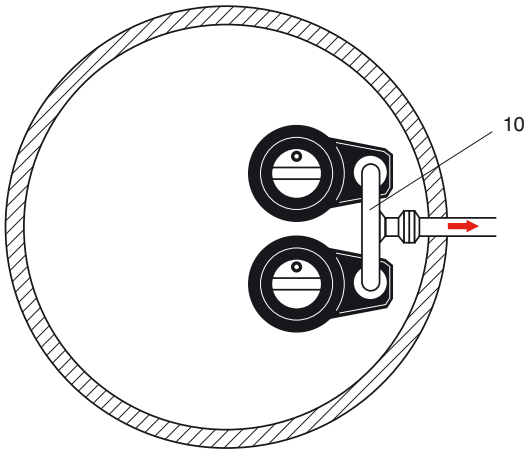

ELECTRICAL DATA AND DIMENSIONS

• Single-phase version with junction box

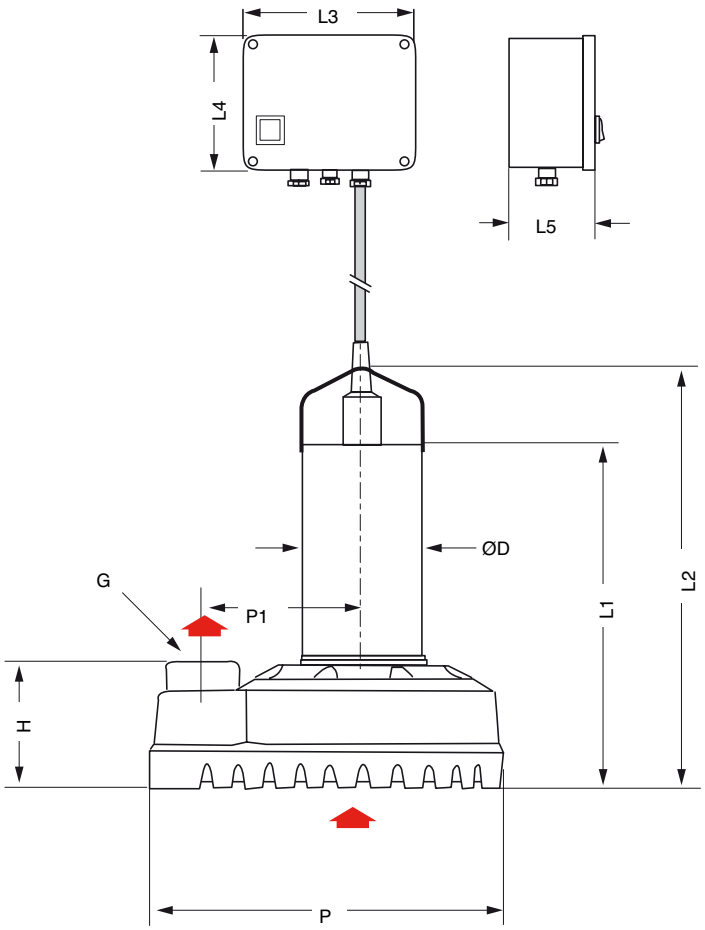

ORDER REFERENCE	MOTOR								PUMP								
	P2	I(A)	I(A)	I(A)	capacitor	cable	ports		H	L1	L2	P	P1	L3	L4	L5	mass
		1x	3x	3x		Ø S											
	kW	230V	400V	230V	µF	mm2	G	ØD	mm	mm	mm	mm	mm	mm	mm	mm	kg
SBS 205-1,1 M	1,1	7,7	-----	-----	20	1	2”	128	132	360	440	375	170	150	120	80	21
SBS 205-1,1 T4	1,1	-----	3,2	-----	-----	1	2”	128	132	360	440	375	170	---	---	---	20
SBS 205-1,5 M	1,5	10,6	-----	-----	30	1,5	2”	138	132	387	472	375	170	200	150	80	22
SBS 205-1,5 T4	1,5	-----	3,6	-----	-----	1	2”	128	132	360	440	375	170	---	---	---	21
SBS 206-2,2 T4 (ou T2)	2,2	-----	5,1	8,8	-----	1,5	2”1/2	138	149	398	483	375	170	---	---	---	24
SHS 205-1,1 M	1,1	7,7	-----	-----	20	1	2”	128	132	360	440	375	170	150	120	80	21
SHS 205-1,1 T4	1,1	-----	3,2	-----	-----	1	2”	128	132	360	440	375	170	---	---	---	20
SHS 205-1,5 M	1,5	10,6	-----	-----	30	1,5	2”	138	132	387	472	375	170	200	150	80	22
SHS 205-1,5 T4	1,5	-----	3,6	-----	-----	1	2”	128	132	360	440	375	170	---	---	---	21
SHS 205-2,2 T4 (ou T2)	2,2	-----	5,1	8,8	-----	1,5	2”	138	132	387	472	375	170	---	---	---	23

SHS-SBS

CONTROL SYSTEMS

Electronic control and protection boxes

Models	YN 3000	YN 7000	MS Lift
			
Application	For controlling levels in a sump by an IPAE sensor (not provided)	For running a submersible pump, lift-pump or pressure booster.	For controlling levels in a fixed installation, dry sump or dry pit type
Number of pumps			
1 pump	YN3100	YN7100	1x4kW
2 pumps	YN3200	-	2x4kW
Characteristics			
1x230V	yes	yes	yes
3x230V	no	yes	no
3x400V	yes	yes	yes
Max. power per pump	4Kw	11Kw	4Kw
Intensity			
Single phase	0,3 to 12A	1 to 23A	1,5 to 12A
Three-phase	0,3 to 10A	1 to 23A	1,5 to 12A
Frequency	50/60Hz	50/60Hz	50/60Hz
Protection class	IP65	IP54	IP54
Level detectors			
Float switch	yes	yes	yes
1 pump	3	1 ou 2	2
2 pumps	4	no	3
IPAE Sensor	yes	-	-
Level electrode	-	2 provided	-

Level detectors		TYPE OF INSTALLATION			Length of cable
		Deep sump installation	**Transportable installation**	**Fixed installation**	in metre
Governed by level electrodes		**Recommended**	Incompatible	Possible	solde in mètre
Muddy water: Float switch Euroflot 430		Incompatible	Possible	Possible	10 ou 20
Governed by IPAE piezometric sensor		Possible	Possible	**Recommended**	10 ou 30

FEATURES

a) Electrical

- "M": single-phase, 230-V, 50-Hz, permanent capacitor built into box supplied with pump.

- "T4": three-phase, 400-V, 50-Hz, or

- "T2": three-phase, 230 V-50 Hz, for EXPORT only (outside Europe)
- Motor protection required, by circuit-breaker (439-E24) or by Yn4000, Yn5000E, or COFSANIT box, with level regulators.

b) Installation

- Simplified standard installation in sump.
- Connection to installation by threaded element.

These pumps must be installed in wet sumps.

c) Packaging

- Pumps delivered packed in recyclable cardboard boxes with 4-conductor power cable 10 m long, without accessories.
- Single-phase model with permanent capacitor box (0.55 and 0.75 kW single-phase, with float).
- The intermediate chamber is filled with oil:
  - Single and three-phase motors ≤ 0.75 kW: 115 ml.
  - Single-phase motors ≤1.1 kW: 150 ml. above: 190 ml.
  - Three-phase motors ≤ 1.5 kW: 150 ml. above: 190 ml.

d) Maintenance

- Replacement of recommended spare parts (•), or KITS grouping several spare parts:
  - Seals kit
  - Casing-stator kit
  - Electric motor kit

Consult us.

ACCESSORIES

- The ADF version of the IPAE box (Zener barrier) should be used for an ATEX system.
- Shut-off valve
- Non-return valve
- Lifting chain
- Float support angle bracket kit
- Alarmson, audible overflow or water shortage alarm box for clear and muddy water

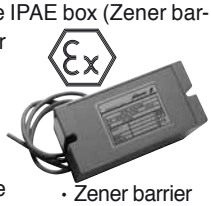

• Zener barrier



• ALARMSON

RANGE OF USE

Flow rate up to:	**150 m³/h**
Manometric head up to:	**41 mCE**
Temperature range:	**+3° to 40°C**
Max. Depth of immersion:	**10 m**
ND of output hole:	**G1"1/4 to G4**
Particle size:	**from 5 to 10mm***

* depending on the model

AQUAVAL

SUBMERSIBLE PUMPS FOR CONSTRUCTION SITES

Dewatering - Draining

50 Hz

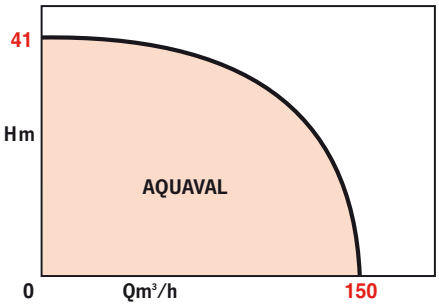

APPLICATIONS

Drainage pump for all types of construction sites:
- public works,
- civil engineering,
- lowering the water table,
- road tunnels, etc...

Draining dirty water (excluding sewage):
- rainwater,
- muddy water,
- sandy or silty water, etc...

ADVANTAGES

- **Transportable or fixed installation.**
- **Exceptionally hard-wearing.**
- **Oil-immersed motor as standard allowing operation out of the water (additional cooling by the fluid being pumped on the Aquaval 32, 50 and 100).**
- **Very low maintenance.**



• AQUAVAL 1 vertical output



• AQUAVAL 50A, central output allowing the pump to be used in narrow locations (boreholes etc...)



• AQUAVAL 32 vertical output



• Control box YN3000, Euroflot 423 float switch, EAPS sensor and NIVO 430 float switch

AQUAVAL

DESIGN

• Hydraulic part

- Monobloc submersible pump with extended shaft.
- Central or side output depending on model.
- Closed impeller (except for Aquaval 1 with semi-open impeller), with large open passage.
- Wearing ring fitted as standard (except for Aquaval 1 and 15).
- Double mechanical seal Silicon carbide/Silicon carbide (regardless of the direction of rotation), double ball bearing.
- Intermediate waterproofing chamber filled with white mineral oil.

• Electric motor

Motors fitted with an internal oil-bath cooling system.

Speed:	2900 rpm
Three-phase winding:	230 or 400 V
Mono winding:	230 V
Frequency:	50 Hz (option 60 Hz)
Insulation class :	130 (B)
Protection class:	IP 68 to 10 m
Conformity:	EN 809

BASIC CONSTRUCTION

Main parts	Material
Body of motor	Aluminium G-AISI 12
Pump housing	Cast iron EN GJL 200
Shaft	Stainless steel 420
Upper mech. seal	Sic/Sic
Lower mech. seal	Sic/Sic
Impeller	Cast iron EN GJL 250 (up to Aquaval 15) Cast i ron EN GJS 500-7 (Aquaval 32 to Aquaval 100)
Fixed wearing ring	Cast iron EN GJS 500-7

IDENTIFICATION

AQUAVAL 100 A-T4-H

Pump code

Size of pump

Central output

M = Single-phase 230V
T4 = Three-phase 400V
T2 = Three-phase 230 V

Type of hydraulics:
B : low pressure curve
M : medium pressure curve
H : high pressure curve
(only for sizes 50A and 100A)

HYDRAULIC PERFORMANCE AT 2 900 RPM

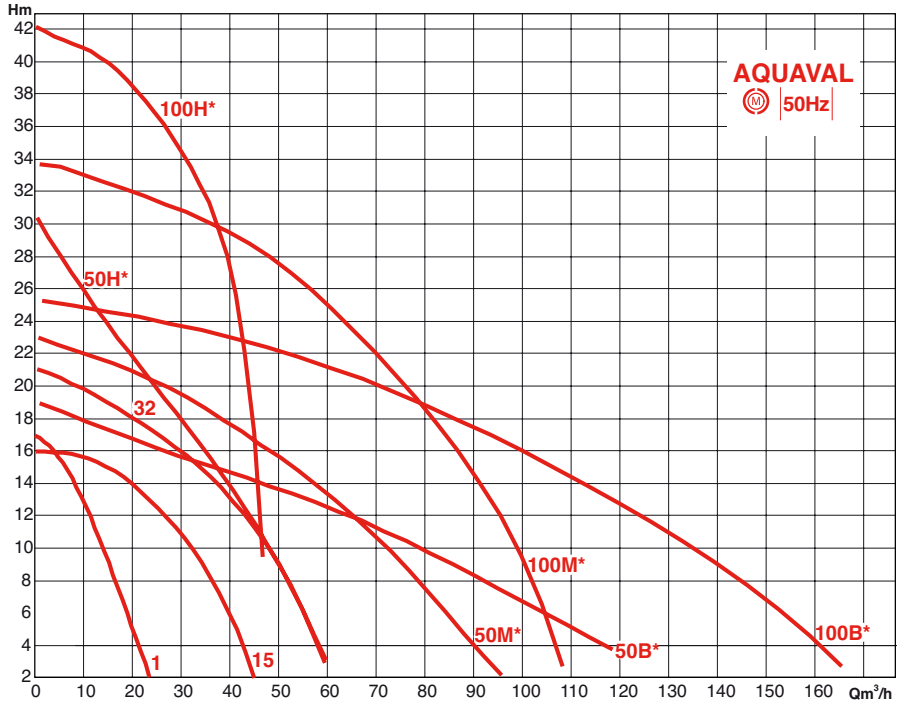

* Hydraulic characteristics obtained by changing impeller to low (B), medium (M) or high (H) pressure: the impeller is interchangeable between the types within any range.

INSTALLATION DIAGRAM

Transportable installation
The broad base means good stability, even on soft or uneven ground.
Box recommended: YN7000 and Euroflot 423on-off float switch.

Fixed installation
Permanent installation in a concrete access chamber or plastic reservoir.
Box recommended: YN3000 and IPAE sensor or Nivo 430float switches.

Installation in a deep sump
Types 50A and 100A with central output for pumping out of narrow sumps or wells.
Box recommended: YN7000 and Euroflot 423on-off float switch or water-level electrodes.

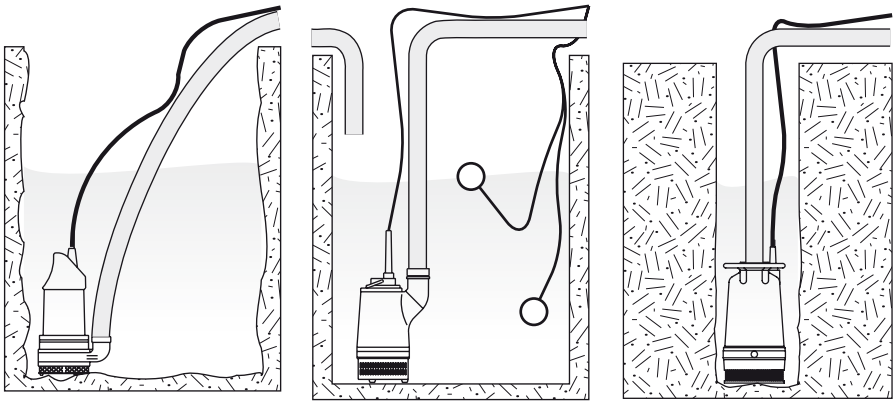

CROSS-SECTION DIAGRAM

AQUAVAL 1

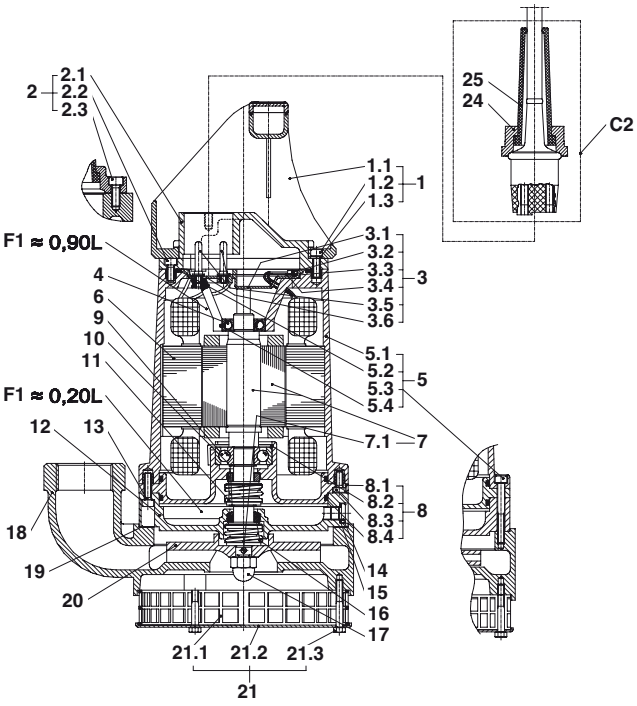

AQUAVAL 15

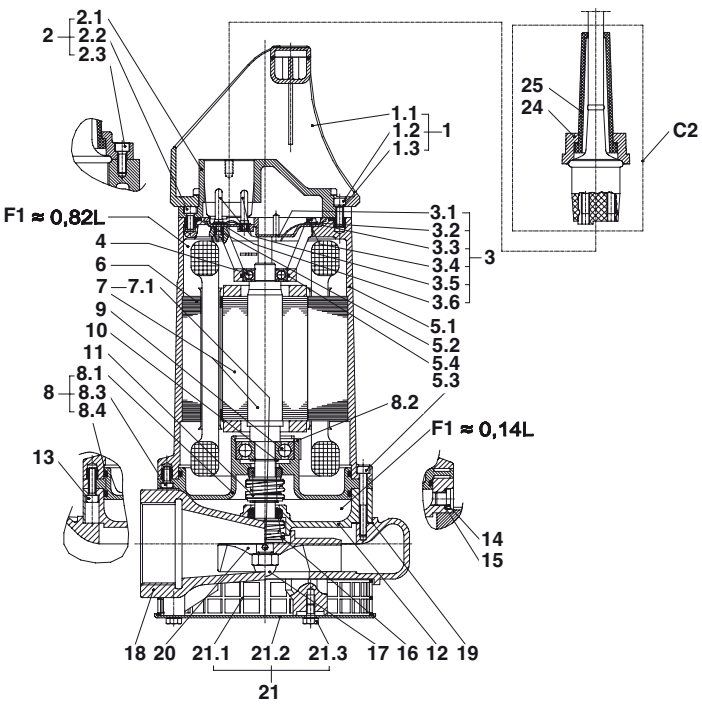

• Parts list

- 1.1- Handle
- 1.2- Screw
- 1.3- Annular spring
- 2.1- Cover of motor
- 2.2- Screw
- 2.3- Screw
- 3.1- Plastic terminal plate
- 3.2- Annular spring
- 3.3- Washer
- 3.4- Screw
- 3.5- Contact bolt
- 3.6- Washer
- • 4- Upper ball bearing
- 5.1- Housing of motor
- • 5.2- Top-of-motor O-ring
- 5.3- Screw
- 5.4- O-ring
- • 6- Stator
- • 7- Rotor shaft
- 7.1- Slotted pin
- 8.1- Step bearing
- 8.2- Circlip
- 8.3- Screw
- • 8.4- Pump housing O-ring
- • 9- Lower ball bearing
- 10- Circlip
- • 11- Upper mechanical seal
- 12- Seal housing
- 13- Screw
- 14- Plug
- 15- Seal washer
- • 16- Lower mechanical seal
- 17- Cap nut
- 18- Housing of pump
- 19- Flat gasket
- • 20- Semi-open impeller
- 21.1- Suction mesh
- 21.2- Base
- 21.3- Screw
- 24- Cable flange
- 25- Cable protection sleeve
- F1- Quantity of medical-grade white mineral oil
- C2- Cable for motor

(•) Recommended spare parts

AQUAVAL

CROSS-SECTION DIAGRAM

AQUAVAL 32

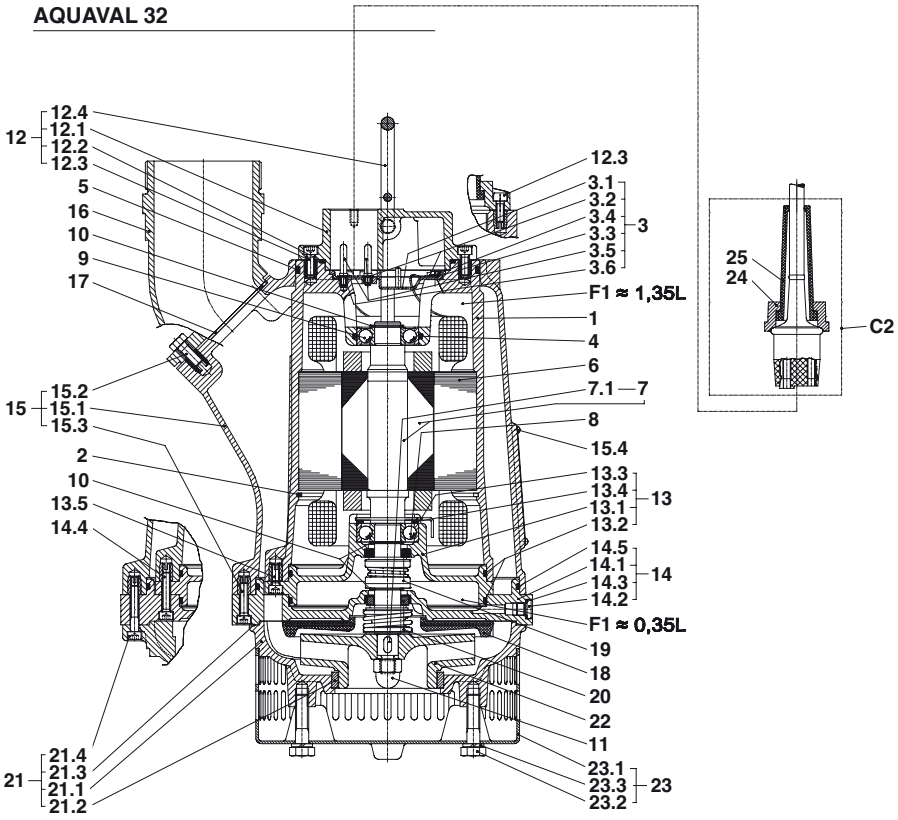

• Parts list

- 1 - Motor housing
- 2 - Circlip
- 3.1 - Plastic terminal plate
- 3.2 - Annular spring
- 3.3 - Washer
- 3.4 - Screw
- 3.5 - Contact bolt
- 3.6 - Washer
- 4 - O-ring
- • 5 - Top-of-motor O-ring
- • 6 - Stator
- • 7 - Shaft rotor
- 7.1 - Key
- • 8 - Lower ball bearing
- • 9 - Upper ball bearing
- 10 - Circlip
- 11 - Cap nut
- 12.1 - Cover of motor
- 12.2 - O-ring
- 12.3 - Screw
- 12.4 - Handle
- 13.1 - Housing of sleeve bearing
- • 13.2 - Pump housing O-ring
- 13.3 - Circlip
- 13.4 - Washer
- 13.5 - Screw
- 14.1 - Seal flange
- 14.2 - Plug
- 14.3 - Seal flange
- 14.4 - Screw
- 14.5 - O-ring
- 15.1 - Housing of pump
- 15.2 - Screw
- 15.3 - Screw
- 15.4 - Semi-flat screw
- 16 - Output pipe
- 17 - Flat gasket
- • 18 - Upper wearing plate
- • 19 - Upper mechanical seal
- • 20 - Lower mechanical seal
- 21.1 - Pump housing
- • 21.2 - Lower wearing ring
- 21.3 - Flat gasket
- 21.4 - Screw
- • 22 - Closed impeller
- 23.1 - Suction mesh
- 23.2 - Screw
- 23.3 - Annular spring
- 24 - Cable flange
- 25 - Cable protection sleeve
- F1 - Quantity of medical-grade white mineral oil
- C2 - Cable for motor

(•) Recommended spare parts

CROSS-SECTION DIAGRAM

AQUAVAL 50

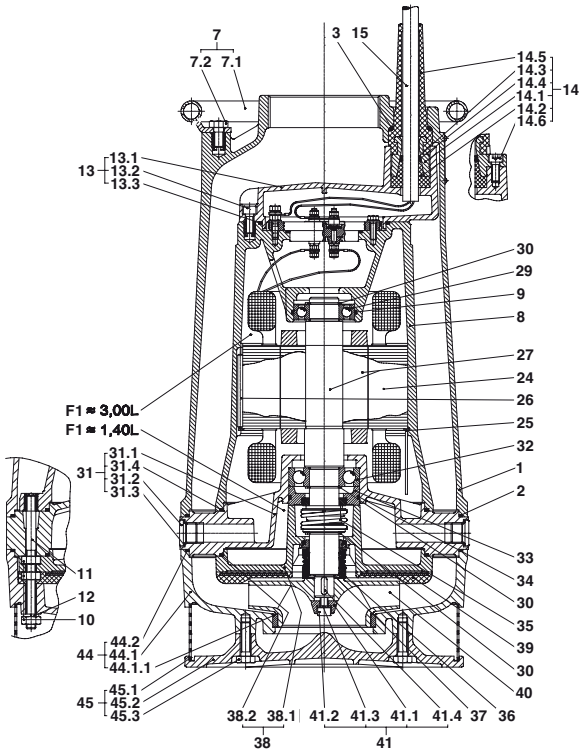

AQUAVAL 100

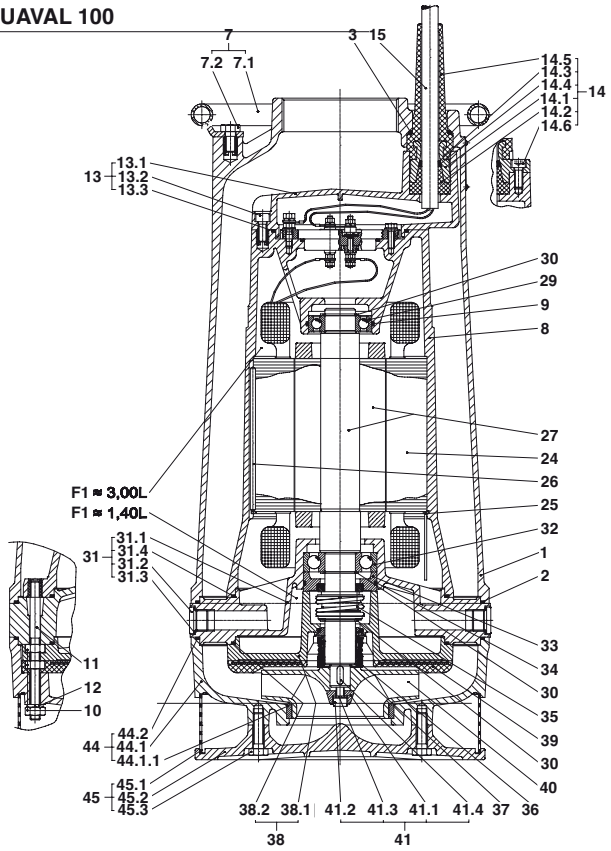

• Part liste

1 - Pump housing
• 2 - O-ring housing of pump
3 - O-ring
7.1 - Handle
7.2 - Screw
8 - Housing of the motor
9 - O-ring
10 - Nut
11 - Screw
12 - Annular spring
13.1 - Cover of motor
13.2 - Screw
• 13.3 - Top-of-motor O-ring
14.1 - Cable flange
14.2 - Profiled gasket
14.3 - Pressure ring
14.4 - O-ring
14.5 - Cable protection sleeve
14.6 - Screw
15 - NSSHÖU-J cable
• 24 - Stator
25 - Circlip
26 - Safety bar
• 27 - Shaft rotor
• 29 - Upper ball bearing
30 - Circlip
31.1 - Bearing housing
31.2 - Plug
31.3 - Seal washer
31.4 - O-ring
• 32 - Lower ball bearing
33 - Pressure ring
34 - O-ring
• 35 - Upper mechanical seal
• 36 - Lowerr mechanical seal
37 - Washer
38.1 - Waterproof housing
38.2 - O-ring
• 39 - Upper wearing plate
• 40 - Closed impeller
41.1 - Washer
41.2 - Screw
41.3 - Nord-Lock screw locking device
41.4 - Key
44.1 - Pump housing
• 44.1.1 - Lower wearing ring
45.1 - Suction mesh
45.2 - Base
45.3 - Screw
F1 - Quantity of medical-grade white mineral oil
C2 - Cable for motor

(•) Recommended spare parts

AQUAVAL

HYDRAULIC PERFORMANCE

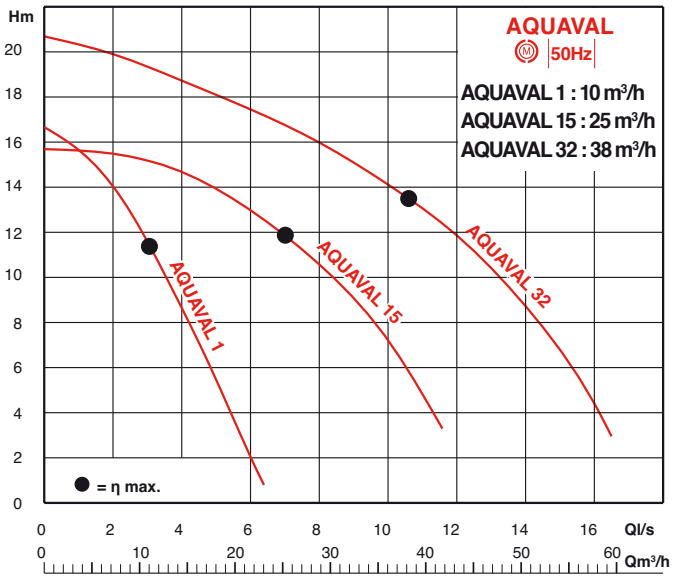

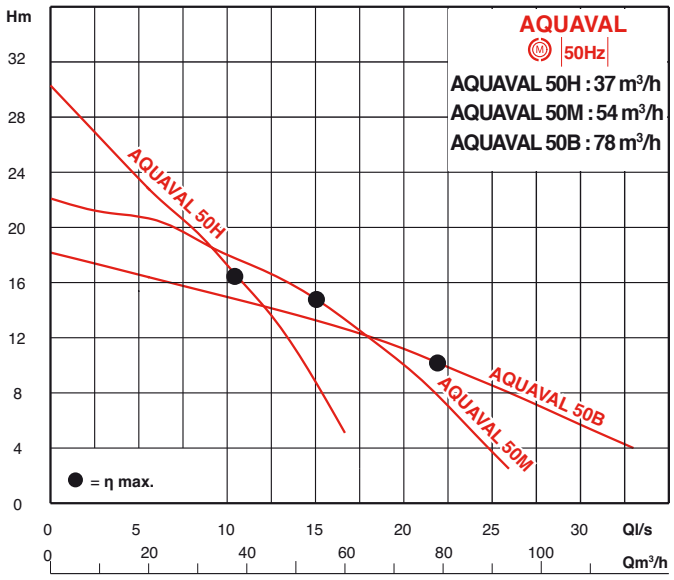

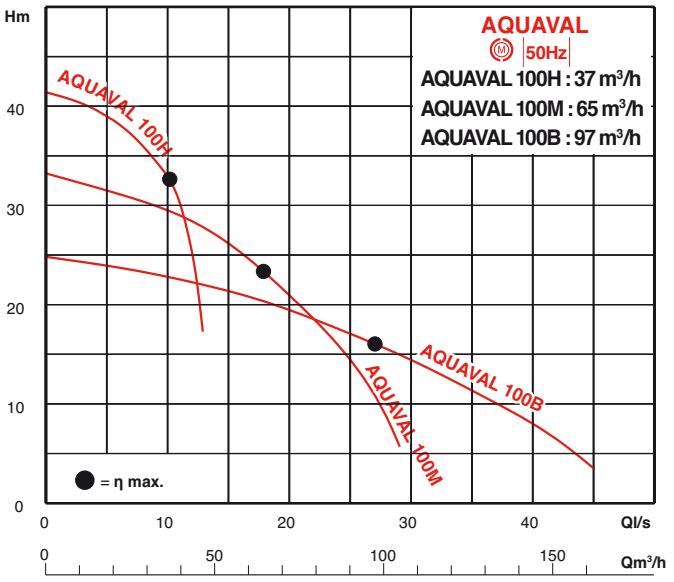

ELECTRICAL FEATURES AND SIZES

Aquaval 1

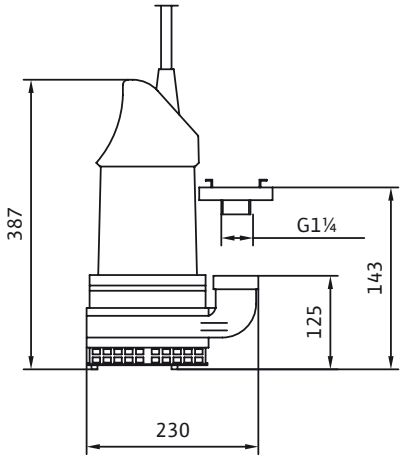

Aquaval 15

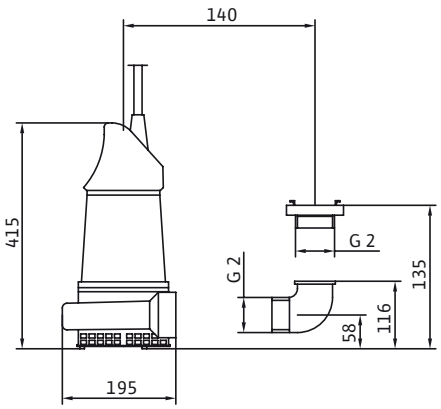

Aquaval 32

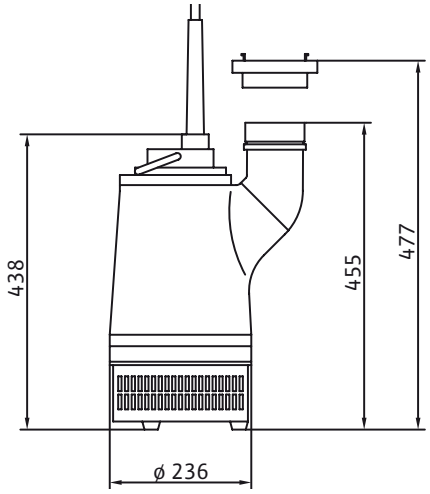

Aquaval 50A and 100A

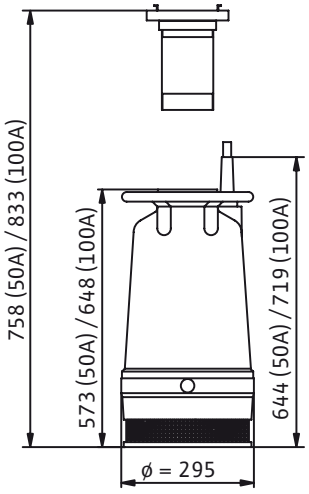

ORDER REFERENCE	MOTOR						PUMP		
	P2	Nominal current			Volume of oil		ND (Nominal Diameter)	Weight	particle size
	Power	1 x 230V	3 x 230V	3 x 400V	intermediate chamber	motor	output (internally threaded)		
Aquaval	kW	A	A	A	L	L		kg	mm
1-M or T4	0.75	5.7	–	1.9	0.2	0.9	G1$^{1/4}$"	21	9
15-M or T2 or T4	1.3	9.4	6.0	3.2	0.14	0.82	G2"	26	10
32-T4	2.4	–	–	4.7	0.35	1.35	G3"*	34	5
50A-T4H-M or B	3.7	–	–	8	1.4	3.0	G4"	66	6
100A-T4H-M or B	7	–	–	14.7	1.4	3.0	G4"	83	6

* Exception on Aquaval 32: output externally threaded

AQUAVAL

CONTROL SYSTEMS

Electronic control and protection boxes

Model	YN 3000	YN 7000	MS Lift
			
Application	Managing water levels in a sump by an IPAE sensor (not supplied)	Managing a submersible, lift or booster pump	Managing water levels in a fixed installation, sump or dry pit type
Number of pumps			
1 pump	YN3100	YN7100	1x4kW
2 pumps	YN3200	-	2x4kW
Characteristics			
1x230V	yes	yes	yes
3x230V	no	no	no
3x400V	yes	yes	yes
Max. power per pump	4Kw	11Kw	4Kw
Intensity			
Single phase	0,3 to 12A	1 to 23A	1,5 to 12A
Three-phase	0,3 to 10A	1 to 23A	1,5 to 12A
Frequency	50/60Hz	50/60Hz	50/60Hz
Protection class	IP65	IP54	IP54
Level detectors			
Float switch	oui	oui	oui
1 pump	3	1 or 2	2
2 pumps	4	no	3
EAPS sensor	oui	-	-
Water-level electrode	-	2 supplied	-

Level detectors		TYPE OF INSTALLATION			Length of cable
		Installation in deep sump	**Transportable installation**	**Fixed installation**	in metres
Control by water-level electrodes		**Recommended**	Incompatible	Possible	sold by the metre
Clean water: Euroflot 423 float switch		Incompatible	**Recommended**	Possible	10 or 20
Muddy water: Euroflot 423 float switch		Incompatible	Possible	Possible	10 or 20
Control by EAPS Piezometric sensor		Possible	Possible	**Recommended**	10 or 30

ACCESSORIES

	Name	Description	Order reference
Electrical accessories	ALARMSON	Overflow audible alarm	2529590
	ALARMSON S	Overflow audible alarm with 8-hour standby capacity	2529591
	Motor protection box with indicator lamp, thermal protection by magneto-thermal trip	From 1,1 to 6A : Aquaval 1-M and T4, Aquaval 15-T2 and T4, Aquaval 32-T4	4066592
		From 6,3 to 10A : Aquaval 15-M, Aquaval 50A-T4-B, M and H	4066596
	EAPS piezometric water-level sensor	Lecture de 0 à 1m de profondeur, avec Reading from 0 to 1m depth, with 10m cable (compatible with box YN3000)	2519924
		Reading from 0 to 1m depth, with 30m cable (compatible with box YN3000)	2519925
		Reading from 0 to 2,5m depth, with 10m cable (compatible with box YN5000)	2519921
		Reading from 0 to 2,5m depth, with 30m cable (compatible with box YN5000)	2519922
	NIVO430 water-level controller	with cable 10m	4027319
	NIVO430 water-level controller	with cable 20m	4027320
	Euroflot423 float switch	with cable 10m	4048483
	Euroflot423 float switch	with cable 20m	4048484
Hydraulic accessories	Quick-fitting pipe union including 1 externally threaded male bush at the pump end and 1 grooved male bush at the output	G1"1/4	4045062
		G2"	4027321
		G3"	4044981
		G4"	4045023
	Round internally threaded back flange with collar	G1"1/4 - Steel PN10	62477
		G2" - Steel PN10/16	62479
		G3" - Galvanised steel PN10/16	4024616
	Ball-type non-return valve	G1"1/4 F/F internally threaded - PVC PN6	4004711
		G2" F/F internally threaded - Cast iron PN10	4015465
		DN80 à bride - Cast iron PN10/16	4015761
		DN100 à bride - Cast iron PN10/16	4015762
	Gate valve	G1"1/4 F/F internally threaded - Nickel-plated PN16	4015488
	Gate valve	DN50 with flange - Cast iron PN10	2017160
		DN80 with flange - Cast iron PN10	2017162
		DN100 with flange - Cast iron PN10	2017163



Internally threaded round back flange



Ball-type non-return valve



ALARMSON



Quick-fitting pipe union kit



Gate valve



Motor protection box

FEATURES

a) Electrical

- Types Aquaval 32 to 100 in 3~400 V - 50 Hz, type Aquaval 15 in 1~230 V, 3~230V and 3~400V - 50 Hz, type Aquaval 1 1~230V or 3~400V - 50Hz.

b) Fitting

- Fixed or mobile installation, vertical output.

c) Packaging

- Delivered with a 10-metre electric cable (Aquaval 1 and 15) or 20-metre (Aquaval 32, 50 and 100), with connector plugs for the monophase versions.

d) Maintenance

- Wearing pieces replaced (•) see caption to cross-section plan.

NOTES

RANGE OF USE

Flow rate up to:	**74 m³/h**
Mano. head up to:	**30 mCE**
Frequency range:	**+ 5° at 80°C**
Max. operating pressure:	**6 bar**
Opening ND:	**40 à 80**

TP 2800

SELF-PRIMING CENTRIFUGAL PUMPS

Depleting - Draining

50 Hz

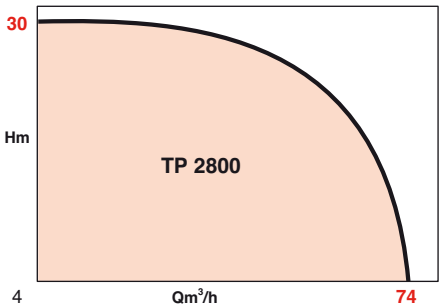

APPLICATIONS

- Depletion of groundwater from excavations and public works sites.
- Draining of flooded cellars and car parks.
- Watering, irrigation.
- Depletion of percolation water...

And for the pumping of all clear, dirty and slightly muddy water.

ADVANTAGES

- **Automatic priming.**
- **Suction without obstruction up to max. 7.50 m.**
- **Ease of intervention: inspection panel allowing for rapid cleaning of the wheel inlet (except TP 2802).**
- **Wheel, diffuser and wear plate easy to replace.**

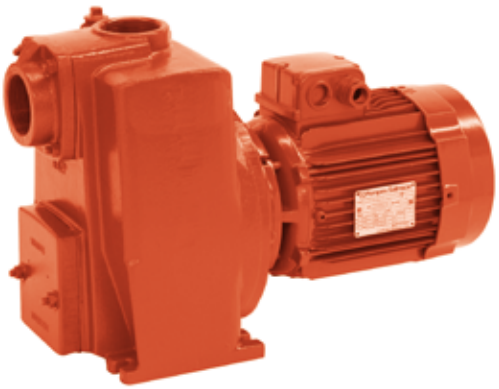

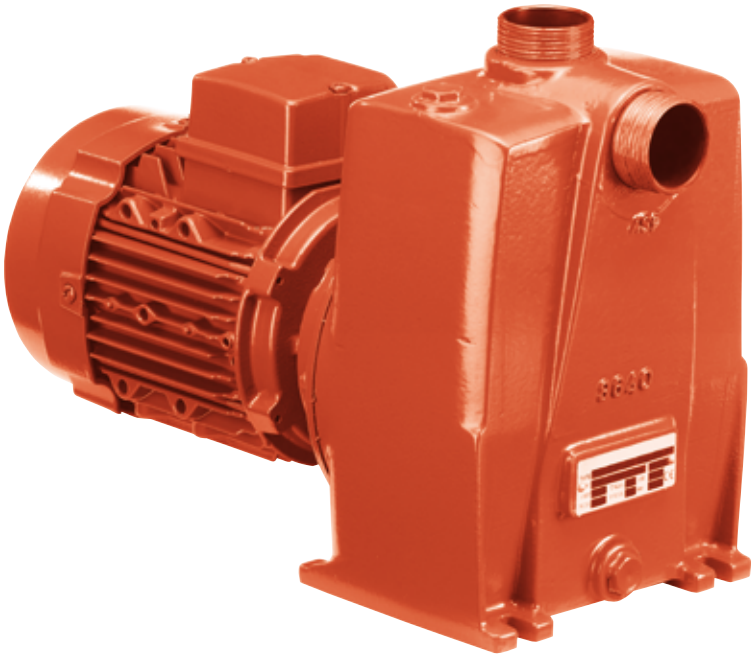

TP 2800

BASIC CONSTRUCTION

• Hydraulic section

- Self-priming centrifugal pump.
- Pump housing with priming tank and inspection panel for cleaning of the wheel inlet (except TP 2802).
- Filling plug.
- High-resistance open wheel.
- Mounting brackets under the pump housing.
- Anti-return valve at suction point (except TP2802).

• Electric motor

Speed:	2900 rpm
Three-phase winding:	230 - 400 V
Frequency:	50 Hz (option 60 Hz)
Insulation class:	155 (F)
Protection index:	IP 55
CE conformity:	EN 809

STANDARD STRUCTURE

Main parts	Material
Housing TP 2802	Aluminium
other types	Cast iron EN GJL 250
Open wheel	Cast iron EN GJL 250*
Diffuser	Cast iron EN GJL 250
Pump shaft	Steel X30Cr13
Mechanical seal	
TP 2802	Carbon/Aluminate/Nitrile
Other types	Carbide/Carbide/Nitrile
	* Molybdenum

IDENTIFICATION

TP28 02 -T

Pump code (TP2800)

Pump size

Electric three-phase 230-400 V

ORIGINAL SECTIONAL DRAWING

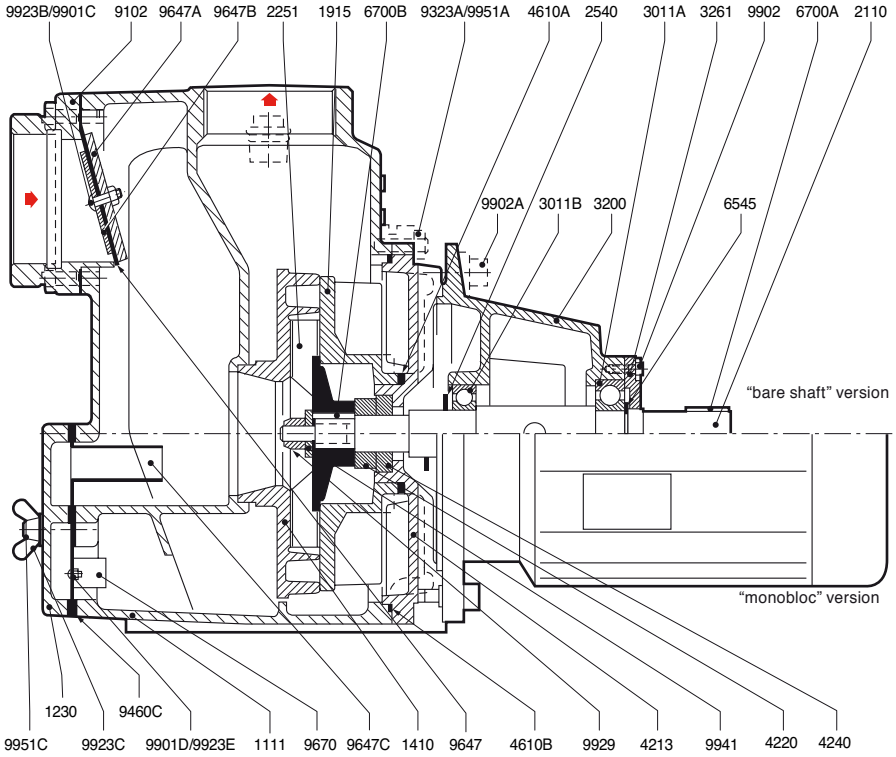

- 1111 - Pump housing
- 1230 - Inspection door
- 1410 - Diffuser
- 1915 - Wear plate
- 2251 - Open wheel
- 2540 - Deflector

3127A - Adjustment washer
3127B - Adjustment washer
4213 - Grain carrying end plate

- 4220 - Rotating seal section
- 4240 - Fixed mechanical section
- 4610A - O-ring (wear plate / end plate)
- 4610B - O-ring (housing / end plate)

6700B - Wheel key

- 8020 - Electric motor

9102 - Suction tube

- 9460C - Inspection door seal

9621 - Filling plug

- 9647 - Anti-return valve at suction point

9647A - Upper valve head
9647B - Lower valve head

- 9647C - Plate + ejector
- 9670 - Ejector spring

9901C - Valve head attachment screw
9901D - Ejector spring attachment screw
9923A - Nut (end plate / housing)
9923B - Nut (valve heads)
9923C - Wing nut (inspection door)
9932E - Nut (ejector spring)
9929 - Wheel blocking nut
9941 - Washer under wheel nut
9951A - End plate / housing attachment dowel
9951C - Inspection door attachment dowel

(•) Recommended spare parts

HYDRAULIC PERFORMANCES WITH ELECTRIC MOTOR

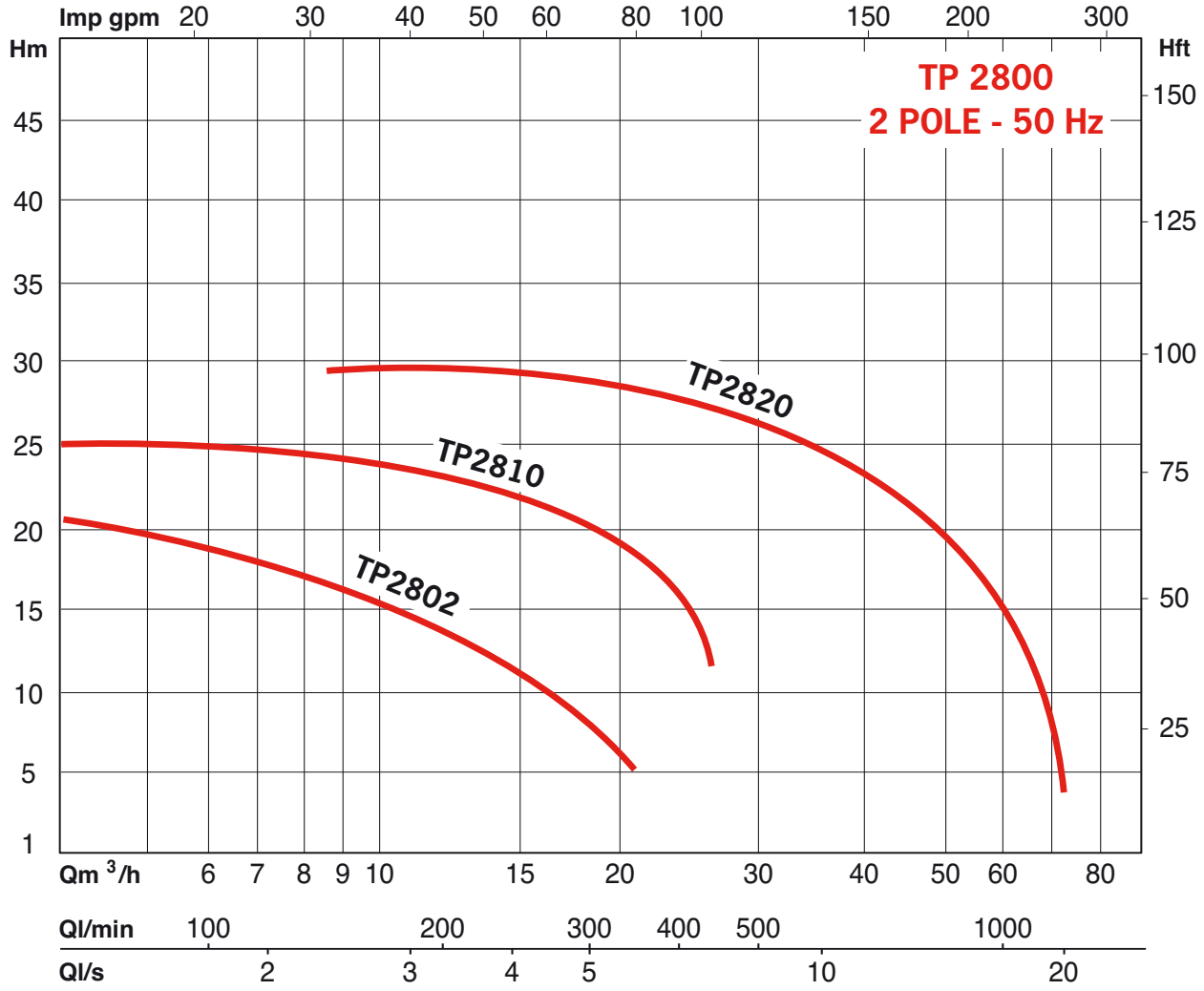

TP 2800

ELECTRICAL AND DIMENSIONAL CHARACTERISTICS

• Monobloc version "T"

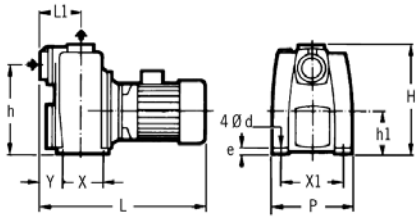

ORDER REFERENCE	P2	nom. I		openings	H	L	P	h	L1	X	X1	Y	Ød	e	mass	particle size*
	motor	A	A													
	kW	3~400V	3~230V	DN	mm	mm	mm	mm	mm	mm	mm	mm	mm	mm	kg	mm
TP 2802-T	1.1	4.5	2.6	1"1/2"M	293	399	184	238	087	122	140	31	10	10	19	6
TP 2810-T	2.2	7.7	4.4	2"F	311	484	229	249	118	129	180	64	10	14	43	6
TP 2820-T	4.2	14.2	8.2	3"F	363	583	260	288	174	190	210	94	14	19	75	12

* Particle size at wheel level

SYMMETRICAL QUICK-FITTING PIPE UNIONS



Connection kit

Threaded female sockets – without lock
Grooved male sockets – with lock

ORDER REFERENCE	Item code	Pump
P*DN40 TAR G1"1/2- CAN.REDØ40	4045031	TP2802
P*DN50 TAR G2 - CAN.REDØ50	4045032	TP2810
P*DN40 TAR G3 - CAN.Ø90	4045464	TP2802

Other kit

ORDER REFERENCE	Item code	Pump
P*DN32 CAN/CAN.Ø35	4045064	Tuyau/tuyau
P*DN40 CAN.RED/CAN.REDØ40	4045025	Tuyau/tuyau
P*DN50 CAN.RED/CAN.REDØ50	4045026	Tuyau/tuyau
P*DN65 CAN./CAN.Ø70	4045027	Tuyau/tuyau
P*DN80 CAN./CAN.Ø90	4045028	Tuyau/tuyau
P*DN100 CAN./CAN.Ø110	4045029	Tuyau/tuyau



Connection kit

Threaded male sockets – without lock
Grooved male sockets – with lock

ORDER REFERENCE	Item code	Pump
P*DN50 FIL. G2- CAN.REDØ50	4027321	TP2810
P*DN80 FIL. G3 - CAN.Ø90	4044981	TP2820

Other kit

ORDER REFERENCE	Item code
P*DN32 FIL. G1"1/4- CAN.Ø35	4045062
P*DN40 FIL. G1"1/2 - CAN.REDØ40	4027322
P*DN65 FIL. G2"1/2 - CAN.Ø70	4013186

FEATURES

a) Electrical

- All types (T) three-phase 230-400 V - 50 Hz.
- Protection of electric motor by overcurrent release essential.
- Connection to motor terminal board by cable gland.

b) Assembly

- On solid base, horizontal axis
- Attachment on brackets supporting pump housing
- Connection to the installation by optional symmetrical quick-fitting pipe unions

c) Packaging

- Delivered without connection accessories.

d) Maintenance

- Pump and motor, repair and replacement of spare parts recommended (•) liable to wear.

OPTIONS AND ACCESSORIES

- Barrow version.
- Suction strainer.
- Protective motor overcurrent release
- Anti-return valve.
- Shut-off valve
- PVC piping or textile structure.

- Connection, suction and discharge accessories. (see below)
- Control and protection unit YN 7000, 1~ 230 V or 3~230/400 V - 50Hz - IP54 - 1 à 23 A



Connection accessories :

Grooved socket
For flexible pipe to be assembled on the elbow

Order reference	item code
SOCKET FC1"1/2"	018820
SOCKET MC2"	018821
SOCKET MC3"	018822



OPERATING RANGE

Flow rates up to:	**500 m³/h**
Mano. head up to:	**60 m CE**
Operating pressure:	**6 bar**
Temperature range:	**- 40° to +140°C***
Connection:	**1"1/2 to 4" DN40 to DN200**
Flange PN:	**PN10/16**
Max. solids:	**≃ DN÷ 2**

* According to model

S

SELF-PRIMING CENTRIFUGAL PUMPS

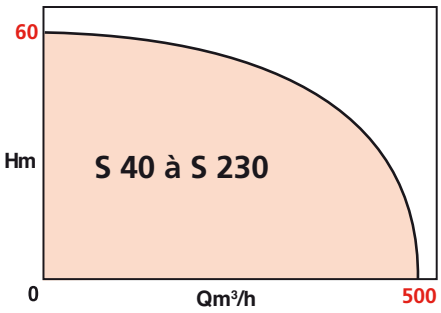

APPLICATIONS

Pumping of clear or muddy, neutral or corrosive fluids in the sectors of industry, muddy water pumping, site dewatering...

Tractable diesel version for rapid intervention in case of flooding.

Application examples:
- Removal of muddy water
- Pumping seawater
- Recirculation of industrial waste
- Waste water pumping
- Black water pumping

ADVANTAGES

- **Self-priming capacity (up to 6m depending on model and system condition) avoiding the use of a foot valve and the risk of unpriming.**
- **High level of abrasion resistance and use of wear plates which are easy to replace.**
- **Passage of large solid bodies of approximately half the DN of the pump.**
- **External lubrication of the mechanical seal to extend its lifespan.**
- **Numerous material combinations corresponding to a maximum number of applications.**
- **Versions equipped with a petrol or diesel thermal motor (contact us).**

• S version on frame

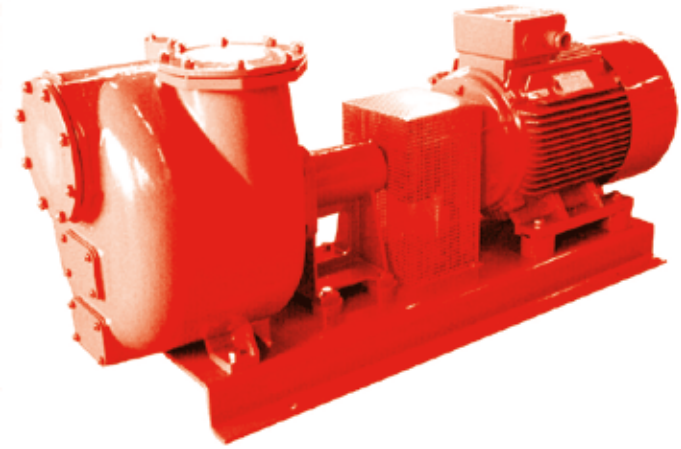

• monobloc stainless steel **S** version

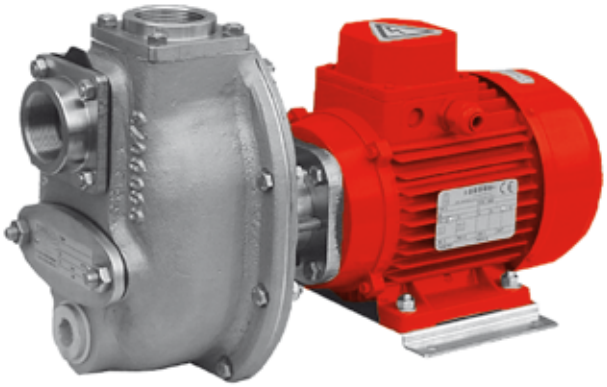

S

CODIFICATION

S	40	F	A	R	-	21	-	T	11	/	2	K	-	3B
	1	2	3	4		5		6	7		8	9		10

1: Pump size (see curves)

2: Pump metal

Code	Pump body	Impeller	Shaft/ housing	Wear plates
F	Cast iron	Cast iron	Stainless steel	Cast iron or Treated steel
E	Cast iron	S.steel 316	Stainless steel	Stainless steel
Z	Cast iron + Zinc anode	Bronze or S.steel	Stainless steel	Bronze or S.steel
C*	Cast iron + CERAM®	Cast iron + CERAM®	Stainless steel	Cast iron or Treated steel
B	Bronze	Bronze	Stainless steel	Bronze
X	S.steel 316	S.steel 316	S.steel 316	Stainless steel

* C: available for S80 and above

3: Impervious material

	Available sizes	Mechanical seals	Gaskets	Valves
A	All	SiC/Ceram/FPM	NBR	NBR
B	All	SiC/Ceram/FPM	FPM	FPM
C	S40 to 42	WC/SiC/PTFE	PTFE	PTFE
	S45 to 161	WC/SiC/PTFE (with bellows)	PTFE	PTFE PTFE or without (depending on size)
	S170 to S230	WC/SiC/PTFE	PTFE	sans
F	All	Carbon/SiC/FPM	NBR	NBR
G	All	Carbon/SiC/FPM	FPM	FPM
H	S45 to 161	Carbon/SiC/PTFE	PTFE	PTFE PTFE or without (depending on size)
J	All	Carbon/SiC/EPDM	EPDM	EPDM
K	All	WC/WC/NBR	NBR	NBR

4: Hydraulic configuration

Code	Openings	Greaser	Option	
R	Threaded	With	/	
S	Flanged	With	/	
T*	Threaded	Without	/	
U*	Flanged	Without	/	By consultation
C	Threaded	With	With knife system	
D	Flanged	With	With knife system	
F	Threaded	Without	With flushing	
G	Flanged	Without	With flushing	

* for imperviousness J only

5: Pump motor assembly

11	Monobloc	standard
12		on portable frame
13		on trolley
14		on tractable trailer
21	Bibloc	standard
22		on portable frame
23		on trolley
24		on tractable trailer
31	Bearing	on frame
32		on frame + spacer
35		bare shaft end pump

6: Motor supply

code	alimentation
T	Three phase
M	Single phase
D	Diesel
E	Petrol
N	Unit without motor

7: Motor power (in kW)

8: Number of poles (for electric motors) / Number of cylinders (for thermal motors)

9: Motor option (empty = no option)

• **Options for electric motor:**

code	option motor
K	PTC probe
S	ON/OFF switch

• **Options for thermal motor:**

code	Brand	Start-up	Tank
A	Lombardini	Manual	on motor
B	Lombardini	Electric	on motor
C	Lombardini	Electric	in frame
E	HATZ	Manual	on motor
F	HATZ	Electric	on motor
G	HATZ	Electric	in frame
H	HATZ - Silent	Electric	in frame
N	DEUTZ	Electric	in frame

10: ATEX brand

code		Corresponding ATEX brand
2	A	ZONE 1 - CAT.2 - II 2Gc
	B	ZONE 1 - CAT.2 - II 2Gc - Ex d IIB T4
	C	ZONE 1 - CAT.2 - II 2Gc - Ex d IIC T4
	D	ZONE 1 - CAT.2 - II 2Gc - Ex de IIB T4
	E	ZONE 1 - CAT.2 - II 2Gc - Ex de IIC T4
3	A	ZONE 2 - CAT.3 - II 3Gc
	B	ZONE 2 - CAT.3 - II 3Gc - Ex d IIB T4
	C	ZONE 2 - CAT.3 - II 3Gc - Ex d IIC T4
	D	ZONE 2 - CAT.3 - II 3Gc - Ex de IIB T4
	E	ZONE 2 - CAT.3 - II 3Gc - Ex de IIC T4

SELECTION ASSISTANCE

The following tables can help to select a pump construction adapted to your requirements.
Alternative constructions may be available upon request.

S **40** F A R - 21 - T 11 / 2 K

Pump size: to be selected on the basis of performance curves

S 40 **F A** R - 21 - T 11 / 2 K

Hydraulic section materials

Code	Application examples	Body*	G.M.*	Gaskets
F A	Muddy water (sand,...)	Cast iron	SiC/Ceram/FPM	NBR
F B	Waste water, oil, petrol, diesel, hydrocarbons	Cast iron	SiC/Ceram/FPM	FPM
Z A	Seawater, salty water	Cast iron & Zinc anode	SiC/Ceram/FPM	NBR
B A	Seawater, brine	Bronze	SiC/Ceram/FPM	NBR
X B	Demineralised water, diluted acid, industrial waste (Viton compatible)	Stainless steel	SiC/Ceram/FPM	FPM
X C	Acids, industrial fluids (PTFE compatible)	Stainless steel	WC/SiC/PTFE	PTFE
X H	Acids, solvents, industrial fluids (PTFE compatible)	Stainless steel	Carbon/SiC/PTFE	PTFE

* exact materials in codification section

S 40 F A **R** - 21 - T 11 / 2 K

Hydraulic option

Codes	Openings
R	Threaded
S	Flanged PN16

S 40 F A R - **21** - T 11 / 2 K

Assembly type pump / motor

Code	Assembly	Advantage
11	Monobloc	Compact construction
21	Bibloc	Sturdy construction for intensive use
31	On frame	Construction for high power

S 40 F A R - 21 - **T 11 / 2 K**

Motor power: to be selected on the basis of performance curves.

DESIGN

• Hydraulic section
- Self-priming centrifugal pump with single-cell surface.
- Horizontal suction, vertical discharge.
- Standard flanged connection or threaded openings.

• Imperviousness
- Simple mechanical seal, optional flushing.
- Automatic distribution lubrication cartridge.
- Sleeved shaft (according to version).

• Motor section
- Standard IEC ventilated motor form B3, B5 or specific long shaft.

Electric motor features:
Output IE2
Network voltage: 1~220V (up to 1,1kW)
3~ 230/400V (up to 4kW)
3~ 400/690V (from 5,5kW)
Frequency: 50 ou 60Hz (according to version)
Number of poles: 2 – 4 – 6 (according to version)
Insulation category: (F)
Protection index: IP55
Probes: PTC (except monobloc)
- Thermal motors available by consultation (assembled on frame or tractable trolley).

CREATION OF THE HYDRAULIC SECTION

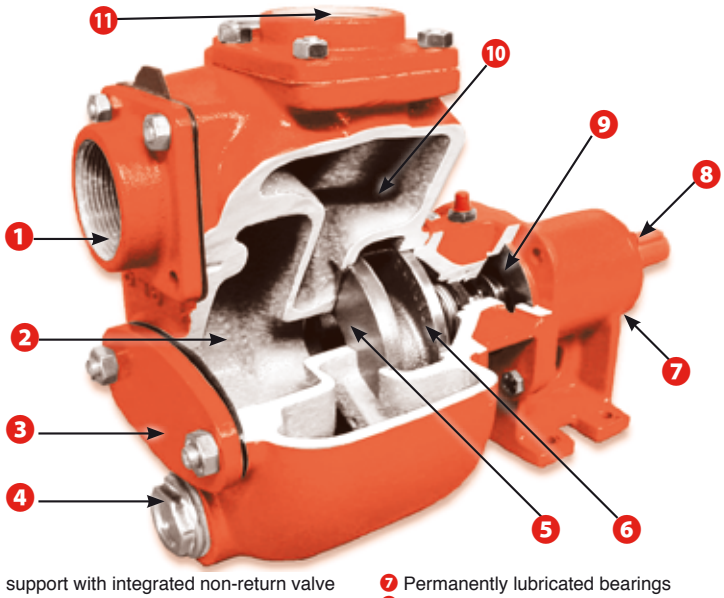

1. Suction support with integrated non-return valve
2. Firing chamber
3. Inspection panel
4. Drain plug or panel (according to model)
5. Wear pads
6. Wide-spaced open impeller
7. Permanently lubricated bearings
8. Shaft
9. Mechanical seal
10. Air separation chamber
11. Delivery port

SELF-PRIMING PRINCIPLE

The pump body is specific and comprises two internal chambers. The impeller 6 trotates in the firing chamber 2, which always remains filled with liquid. This creates the depression required for the suction of air contained in the suction line. IA mixture of air and liquid is created and transferred to the separation chamber 10 where the air is separated from the liquid which falls into the firing chamber due to the force of gravity 2.

Once the suction line is completely filled with liquid, the pump behaves in the same way as a standard centrifugal pump. The upper position of the suction support and the action of the non-return valve 1 allow for liquid to be maintained in the pump at all times. Even after long stoppage periods, the pump may start a new firing cycle without needing to be refilled.

S

SUCTION SUPPORTS AND DELIVERY PORTS

2 options are available

Threaded openings

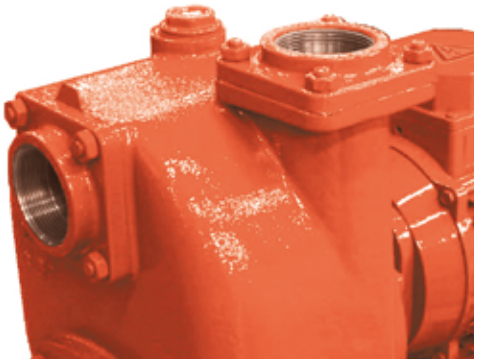

Flanged openings PN16



Dimensions of openings (identical at suction and discharge points):

Pump size	40-41-42-45-46	50-51-60-61-63-65-66-68-69	80-82-83-85-88-91	100-105-108-121	150-161-170-180	201-220-230
Threaded opening	G 1 ½"	G 2"	G 3"	G 4"	-	-
Flanged opening	DN40 PN16	DN50 PN16	DN80 PN16	DN100 PN16	DN150 PN16	DN200 PN16

CERAM ®COATING

Patented CERAM ® coating with a high ceramic content is available on S pumps from size 80.

Advantages:

- Pump protected in the long term against attacks from chemically aggressive fluids.
- Abrasion resistance superior to that of cast iron.
- Adherence three times greater than that of traditional epoxy coatings.
- The strong cohesion of the coating prevents the propagation of rust due to blistering.
- Reloading possible during maintenance operations.



KNIFE SYSTEM OPTION

This option prevents the obstruction of the impeller when fibrous matter is present in the pumped liquid.

Example of use:

- Animal manure with straw
- Liquids with fruit and vegetable residue
- Liquids containing paper or flexible plastic materials
- Sewage

This option is available for the following models:
40, 41, 42, 46, 50, 51, 61, 80, 85, 88, 105, 150
Axial or radial version depending on sizes.

Attention: this option is not suitable if the liquid contains hard solids (wood, metallic items, stones, resistant fabrics,...)

Axial version

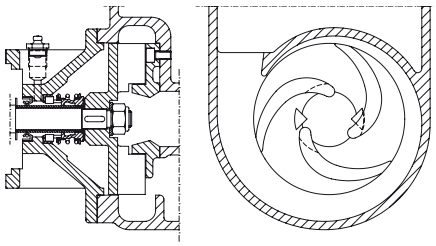

Radial version

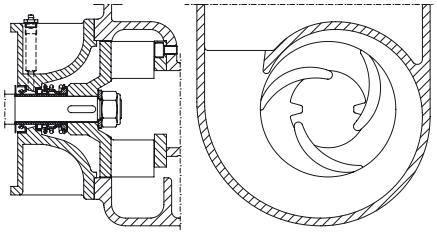

MECHANICAL SEAL

• Automatic greasing cartridge

Provides lubrication for the mechanical seal and reduces heating during the firing phases.

Operation: once the cartridge has been activated, an electronic system regulates a constant flow of grease for the selected duration.

EPDM is not compatible with the cartridge grease. Therefore, this option cannot be selected with imperviousness J (EPDM).

Item No for spare part: 4089173

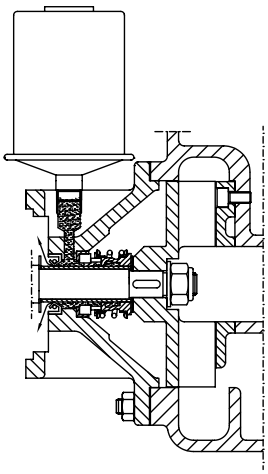

• External lubrication (flushing)

Lubrication is provided by the circulation of an external fluid. This construction allows for the permanent washing of the mechanical seal when pumping blocking, crystallising fluids...

The flushing is not available with all models (contact us).

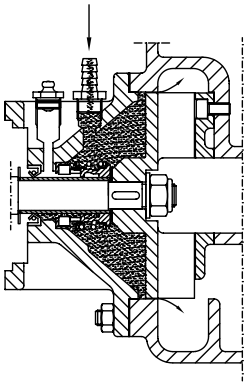

PUMP/MOTOR ASSEMBLY

Transportable monobloc (code 12)		**Transportable** (S40 & 41 only) • Long shafted motor integrated in the pump (without coupling), • Single-phase motor with switch, • Pumps on transportable frame.
Monobloc (code 11)		**Reduced space requirement** • Long shafted motor integrated in the pump (without coupling), • Three-phase motor IE2.
Bibloc (code 21)		**Pump-motor alignment by construction** • Ball bearing, • Permanently greased ball bearings, • Semi-elastic coupling, • Standard IEC motor with flange B5 (IE2), • PTC probes.
On frame (code 31)	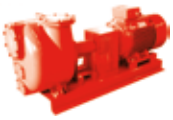	**Traditional construction on frame** • Ball bearing, • Permanently greased ball bearings, • Semi-elastic coupling, • Coupling protector, • Standard IEC motor with feet B3 (IE2),, • PTC probes.
On trolley or trailer (codes 13,14,23,24)		**Autonomous mobile unit** • On tractable trailer or trolley, • Thermal (or electric) motor, • Monobloc or bibloc assembly, • Numerous motor options.

ASSEMBLY WITH THERMAL MOTOR

• Performance curves

When the pump is coupled with a thermal motor, its hydraulics are adapted to the rotation speed of the motor. The operating curves are traced for different rotation speeds (upon request).

• Starter

Two options are available:

- Manual launcher
- Electric starter: the motor-pump unit is fitted in this case with a battery.

• Tank

Two possibilities are offered:

- Tank integrated in the motor
- Tank integrated in the frame; the capacity is greater in this case and varies depending on the model.

• Accessories

Various accessories are available so that the motor-pump units can be connected quickly. See chapter on accessories.

Mobile version on trolley
- Manual starter
- Motor tank





Fixed system
- Electric starter
- Motor tank

Tractable mobile version
- Electric starter
- Tank in the frame



S

ATEX CODIFICATION

II 2G c Ex de IIC T4 X

ATEX brand

Unit:
- Unit II: Excluding mines

Category
- 3G: Category 3 Gas (for Zone 2)
- 2G: Category 2 Gas (for Zone 1)

Mechanical protection
- c: by construction

Motor protection mode
- d: Flame-proof cover
- de: Flame-proof cover & enhanced security

Gas unit
- IIB: Gas unit IIB
- IIC: Gas unit IIC

Temperature category
- T4 = max. surface temperature 135 °C

Additional information provided in the operating instructions

ATEX PROBE

An ATEX PT100 type temperature probe with integrated transmitter is provided for the operation of the pump in the ATEX zone. It is attached directly to the body of the pump and continuously indicates the temperature of the transmitted fluid.

Probe features:
- Protection mode: intrinsic security Ex ia
- Measurement range: 0 -150 °C
- Output signal: 4 – 20 mA
- Supply voltage.: 6,4 – 36 VDC



ZINC ANODE

A galvanic zinc anode option is available for seawater applications.

Operation: The zinc anode is mainly attacked by corrosion and therefore protects cast iron against aggression from seawater. The anode has to be replaced after a certain time, depending mainly on the salt concentration and temperature of the seawater.

Advantage: This option allows for the use of a cast iron pump in seawater application. The cost price is therefore lower than that of an equivalent stainless steel or bronze pump.



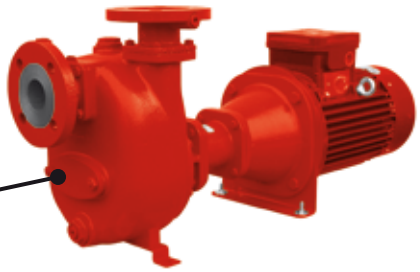

REPRESENTATIVE CROSS-SECTION

Cross-section	Pump size
Type A	40, 42, 45, 50, 60, 80, 82, 83, 100
Type B	41, 46, 51, 61
Type C	63, 65, 66, 68, 69, 85, 88, 91, 105, 108, 121, 150, 161, 170, 180, 201, 220, 230

N°	Description	Type A	Type B	Type C
1	Body	X	X	X
2	Front wear plate	X	X	X
3	Impeller	X	X	X
4	IEC adaptation lantern	X	X	X
5	Lantern base	X	X	X
6	Bracket	X	X	X
7	Shaft	X	X	X
8	Bearing cover	X	X	X
9	Rear wear plate			X
10	Valve holder	X	X	X
14	Valve	X	X	X
16	Lid or drain plug	X	X	X
17	Gasket (drain)	X	X	X
19	Mechanical seal case	X	X	X
20	Case flange		X	
21	Discharge flange	X	X	X
22	Flange gasket	X	X	X
23	Lid or firing plug	X	X	X
24	Firing plug gasket	X	X	X
25	Mechanical seal	X	X	X
26	Inspection panel	X	X	X
27	Gasket (inspection panel)	X	X	X
33	Impeller nut	X	X	X
42	Shell gasket		X	X
43	Body gasket	X	X	X
44	Case gasket		X	
58	Motor side bearing	X	X	X
59	Pump side bearing	X	X	X
64	Spacer ring	X	X	
70	Greaser	X	X	X
80	Electric motor	X	X	X
81	Support foot	X	X	X
93	Half-coupling	X	X	X
94	Elastic seal	X	X	X
95	Half-coupling	X	X	X

Assembly 11

Type A & C

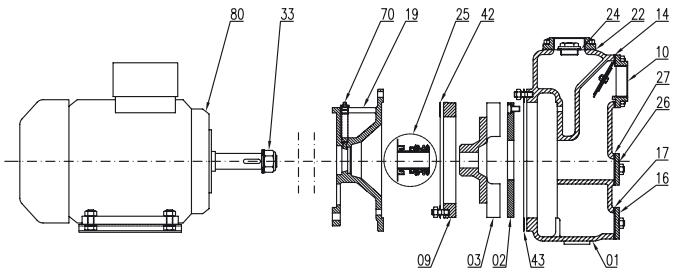

Type B

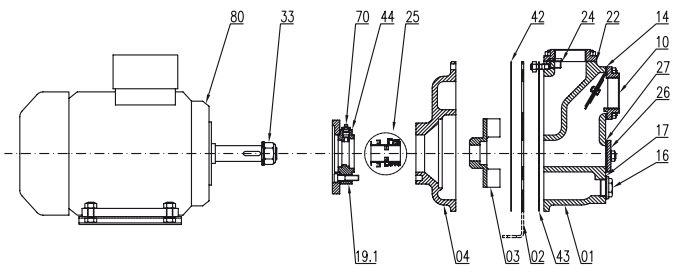

Assembly 21&31

Type A & C

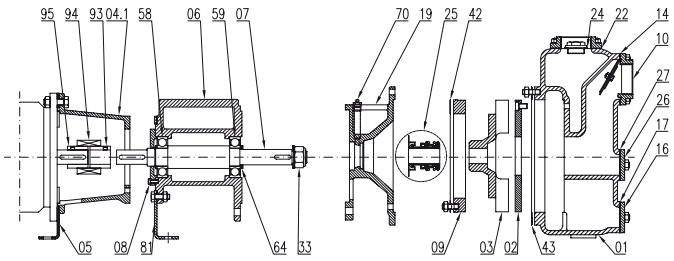

Type B

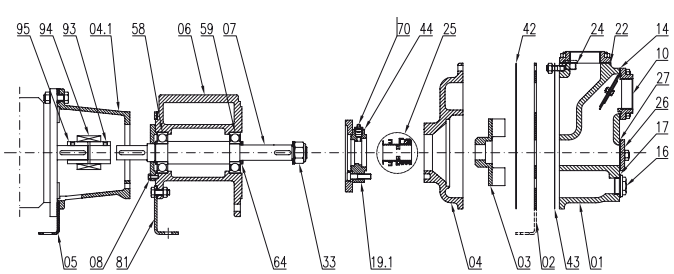

S

ACCESSORIES

Quick spherical connections :

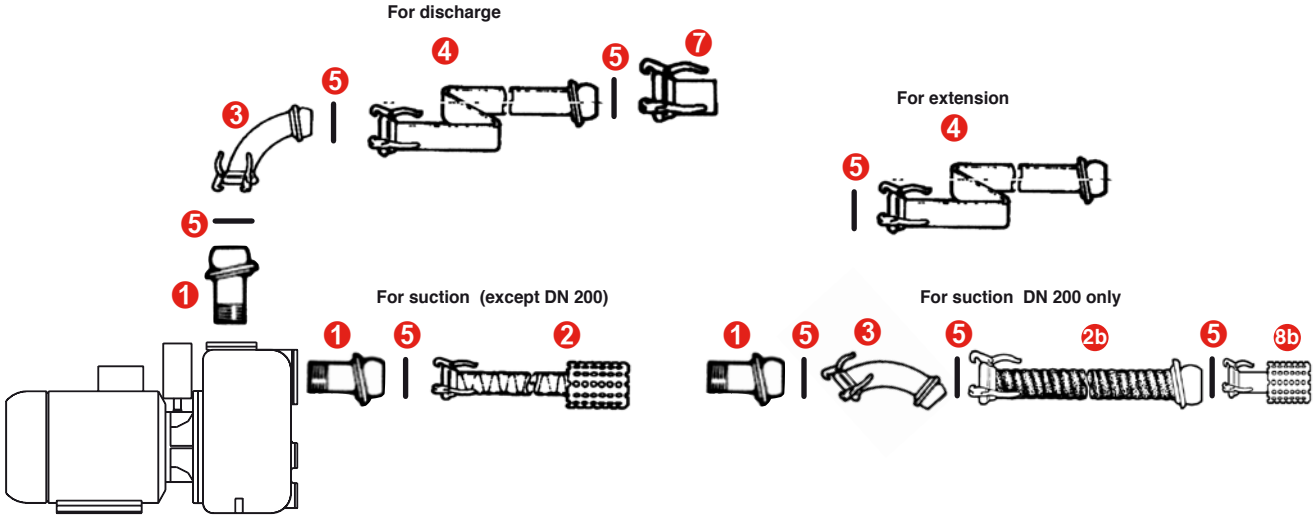

Quick connections available		1"1/2	2"	3"	4"	DN150	DN200
Compatible pump version			threaded opening			special flanges	
1	Male connector - threaded or flanged (according to size))	4108523	4132146	4118400	4118442	4132163	4118448
2	Suction pipe with strainer and female connector	4108524 (5m)	4132147 (5m)	4132154 (5m)	4132158 (5m)	4132164 (5m)	
		4071771 (6m)	4132148 (6m)	4118401 (6m)	4118443 (6m)	4132165 (6m)	
2b	Suction pipe WITHOUT strainer and with male and female connectors						4145711 (3m)
							4145774 (4m)
							4145712 (5m)
3	90° elbow with male and female connectors	4108525	4108525	4118402	4118444	4132166	4118451
4	Flat pipe for discharge (reinforced nylon PVC) with male and female connectors	4108526 (10m)	4108526 (10m)	4118404 (10m)	4132159 (5m)	4132167 (10m)	4118453 (5m)
		4132149 (15m)	4132149 (15m)	4118405 (25m)	4118445 (10m)	4132168 (15m)	4118454 (10m)
		4132150 (30m)	4132150 (30m)		4118446 (20m)		
5	Gasket	4108527	4108527	4118406	4118447	4132169	4118455
6	Smooth male connector	4132144	4132151	4132155	4132160	4132170	4132173
7	Smooth female connector	4108528	4132152	4132156	4132161	4132171	4132174
8	Strainer without connector	4132145	4132153	4132157	4132162	4132172	
8b	Strainer with female connector						4145713

SUCTION PERFORMANCES

• Suction flow limitation:
The curves shown in the technical information are traced for a suction head of 1m.

When the suction head is greater the maximum flow provided by the pump will be reduced as follows:
- 1 m: no correction
- 3 m: max. flow = ¾ of max. flow of pump
- 6 m: max. flow = ½ of max. flow of pump

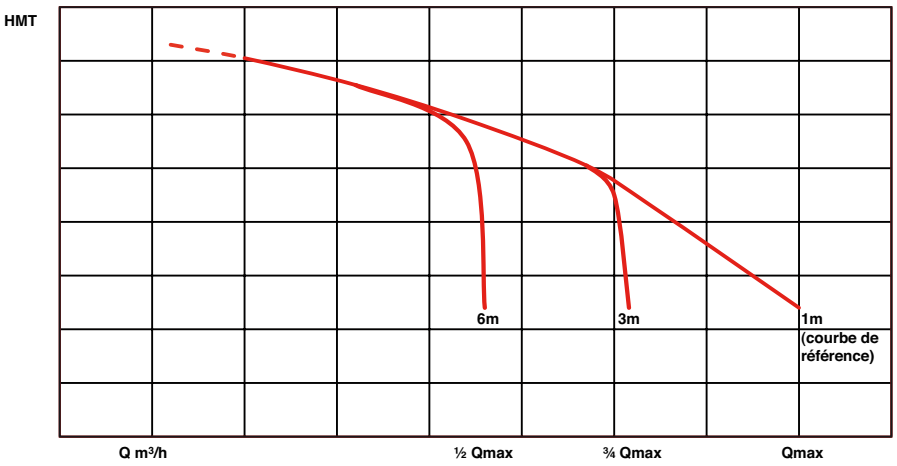

SELF-PRIMING

• Self-priming capacity:

The self-priming capacity of pumps S can reach 6m depending on the models. The firing times are given in the table opposite for water at 20°C and a minimum line length in the DN of the pump.

Pump size	Speed	Firing time in seconds according to the suction head.				
		2	3	4	5	6
S40	2900	21	47	78	135	
S41	2900	27	57	93	153	
S45	2900	12	22	35	47	62
S46	2900	5	8	13	23	34
S50	2900	17	29	46	83	
S51	2900	19	34	55	87	155
S60	2900	19	29	42	56	77
S61	2900	10	15	21	29	41
S63	2900	7	10	14	19	33
S65	1450	30	58	83	186	
S68	2900	9	14	19	26	38
S80(-2)	2900	36	49	62	74	95
S80	2900	21	53	95	132	
S83	2900	14	20	26	31	39
S85	1450	32	63	100	152	
S88	2900	4	7	11	18	26
S88 (210)	2900	5	8	11	15	20
S100	2900	19	30	38	45	54
S105	1450	38	69	110	167	
S105	2300	9	13	17	21	25
S105 T114	1450	30	62	110	189	
S108	2900	10	14	18	22	27
S120	1450	10	18	31	50	95
S150	1450	33	71	117	176	
S160	1450	15	26	41	63	93
S170	950	28	51	85	129	181

NPSH REQUIRED

• Suction capacity:

The firing capacity and the suction capacity are two different concepts.

The suction capacity of the pump (NPSH) represents its ability to take out liquid when it is fired.

S

HYDRAULIC PRESELECTION GUIDE

CAST IRON pump curves (F,Z,E)

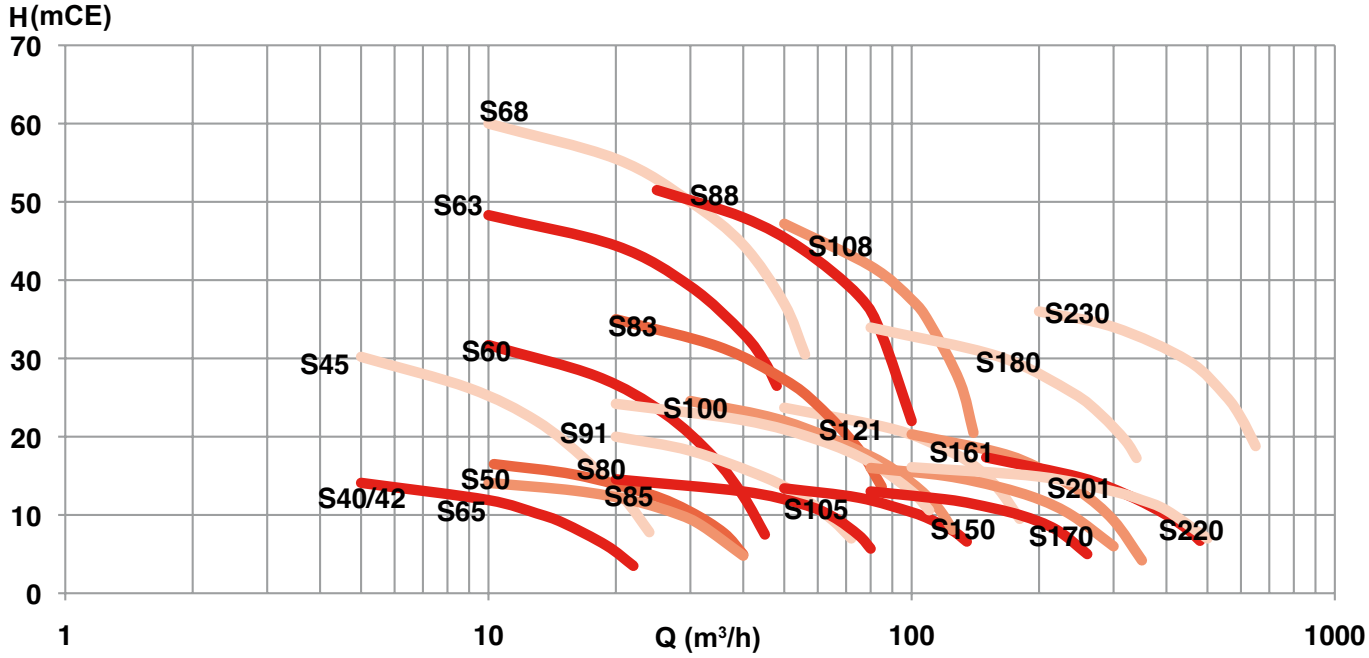

STAINLESS STEEL pump curves (X)

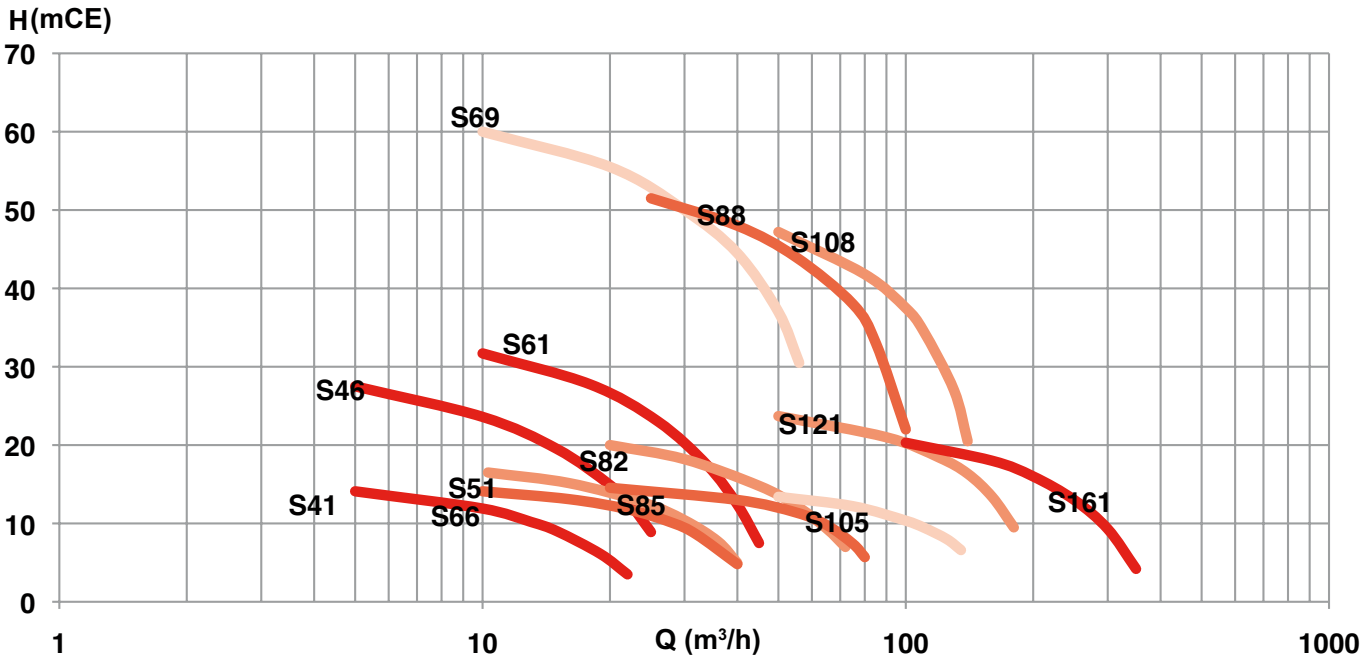

HYDRAULIC PERFORMANCES

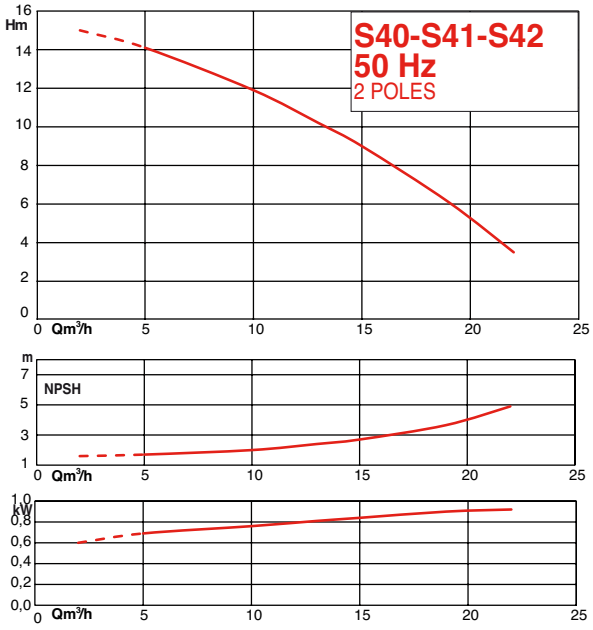

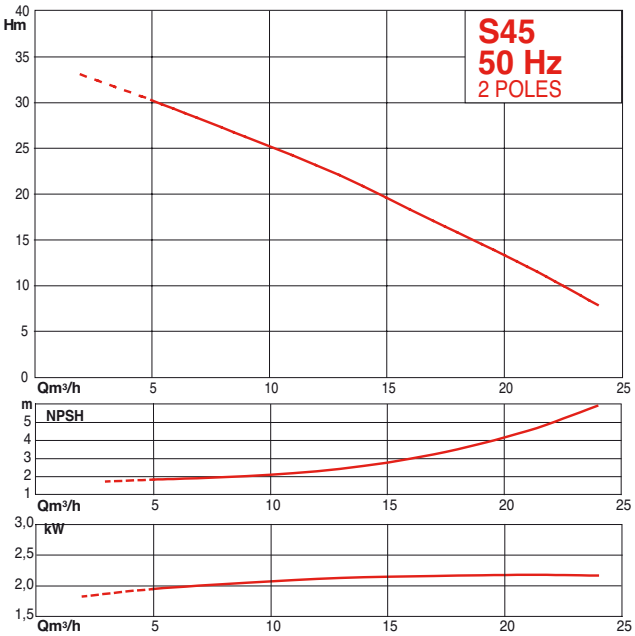

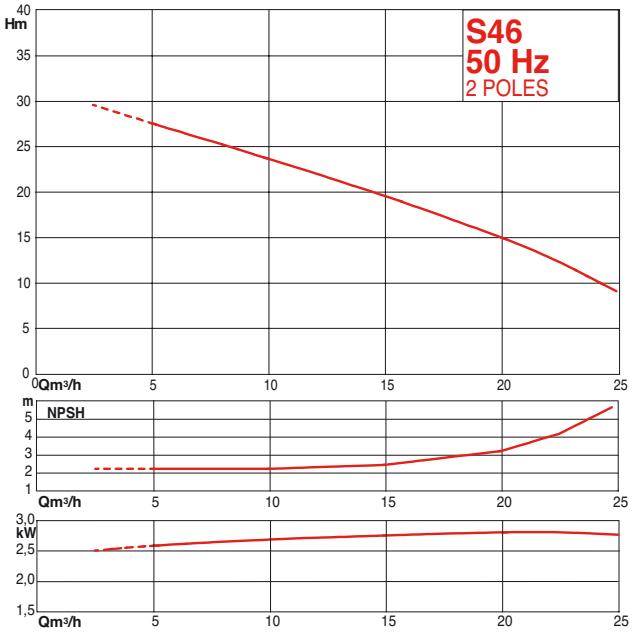

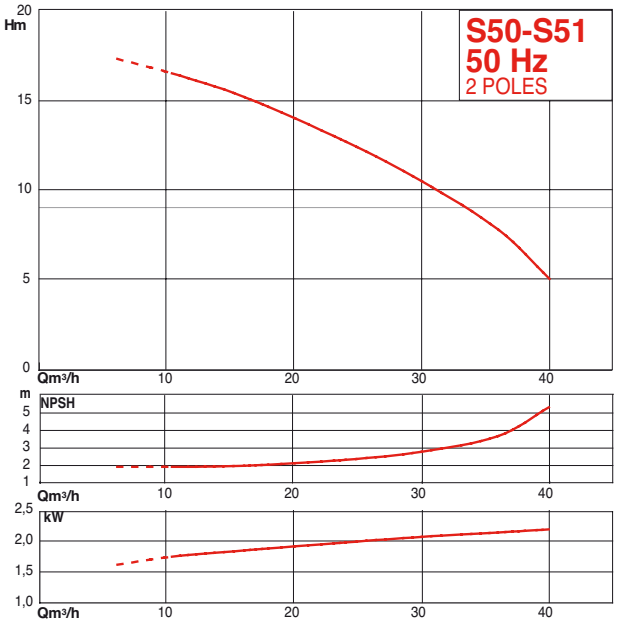

S

HYDRAULIC PERFORMANCES

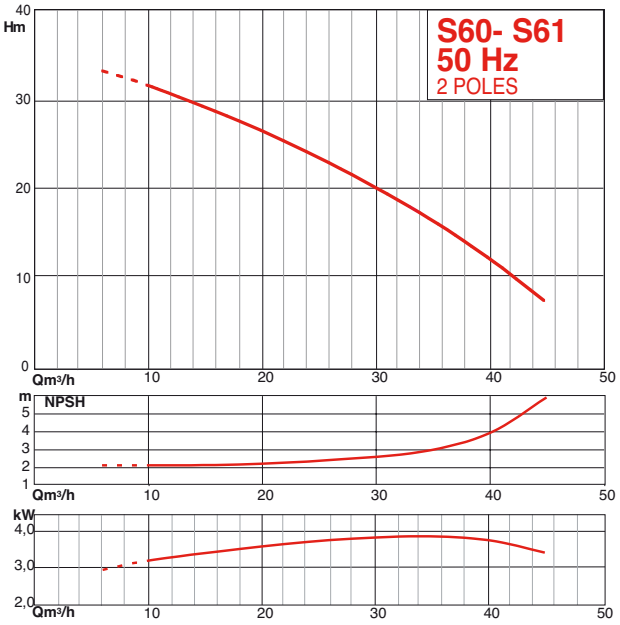

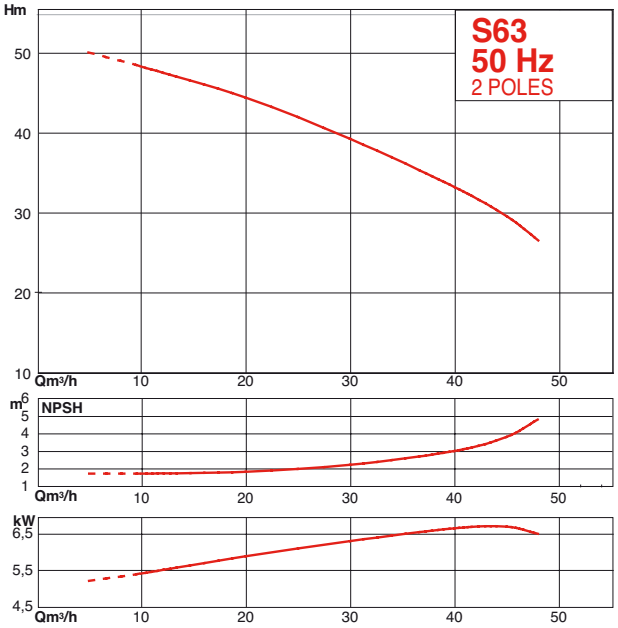

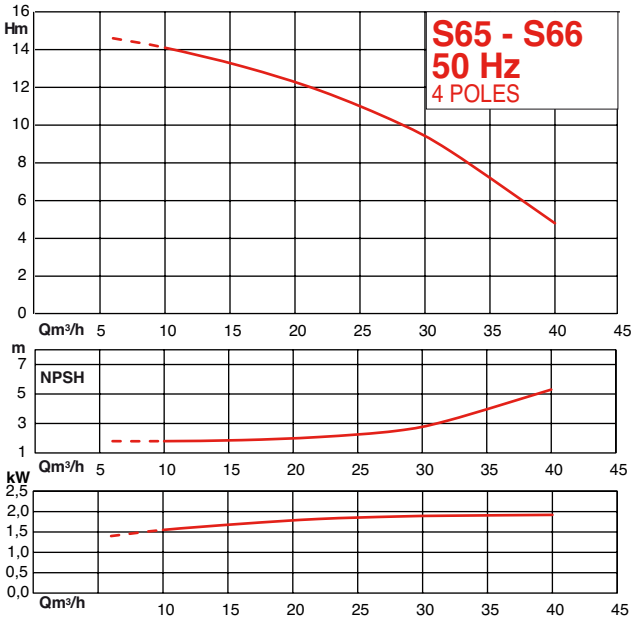

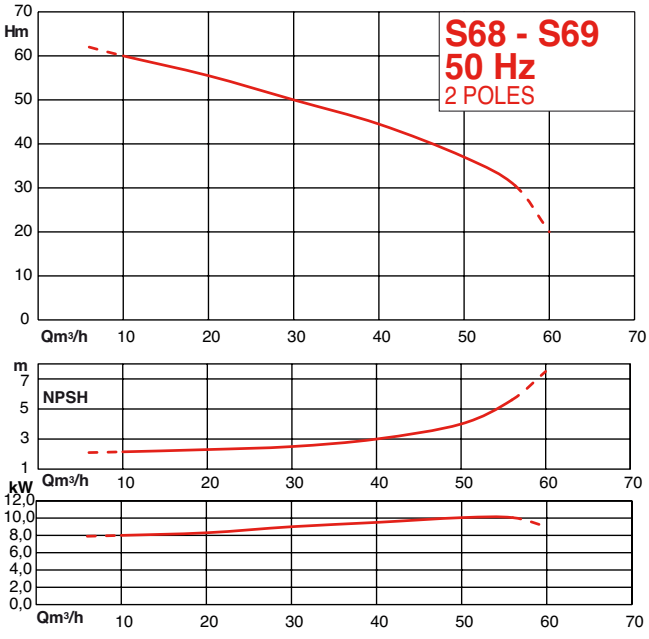

HYDRAULIC PERFORMANCES

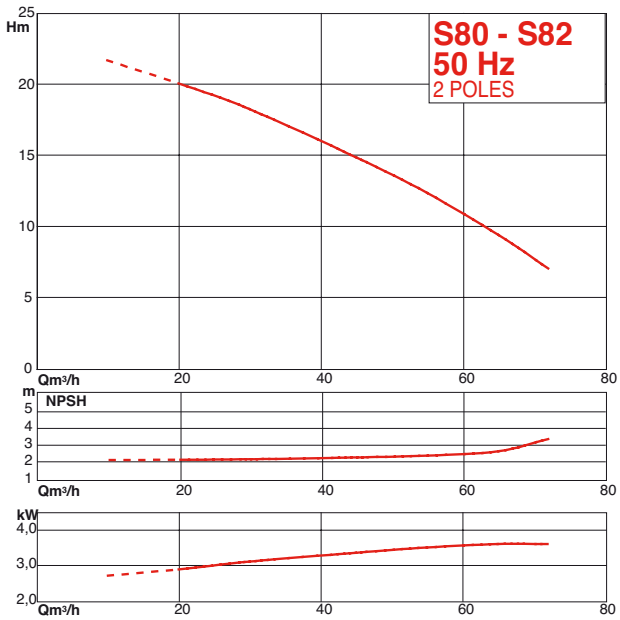

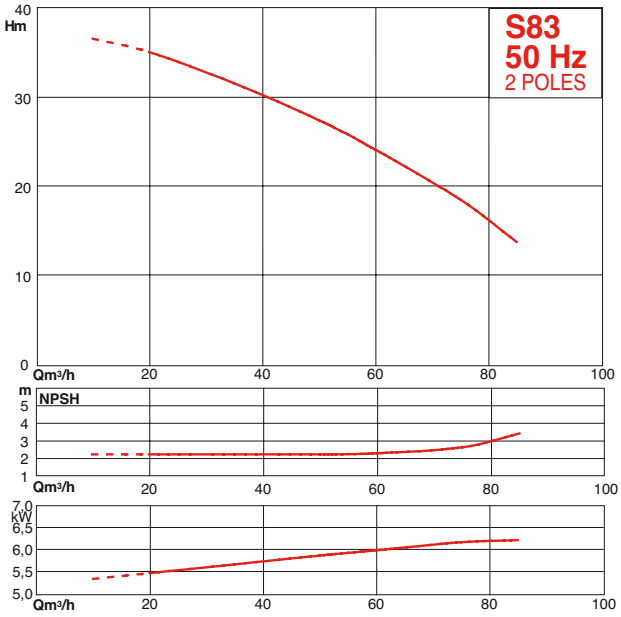

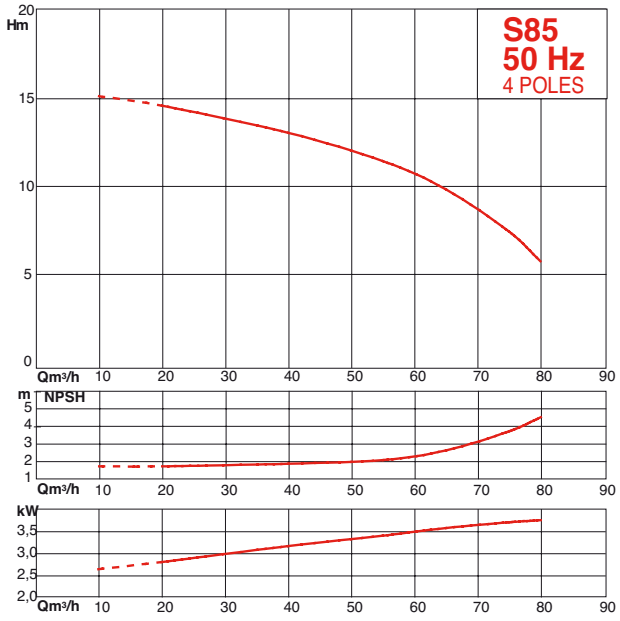

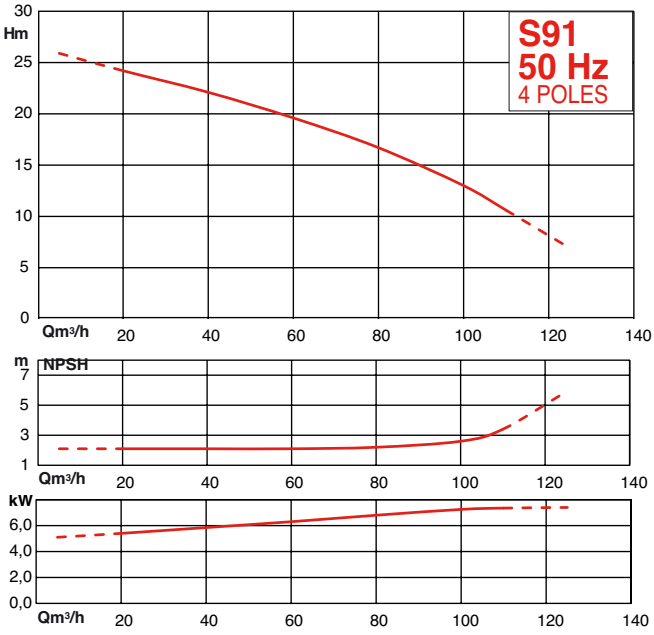

S

HYDRAULIC PERFORMANCES

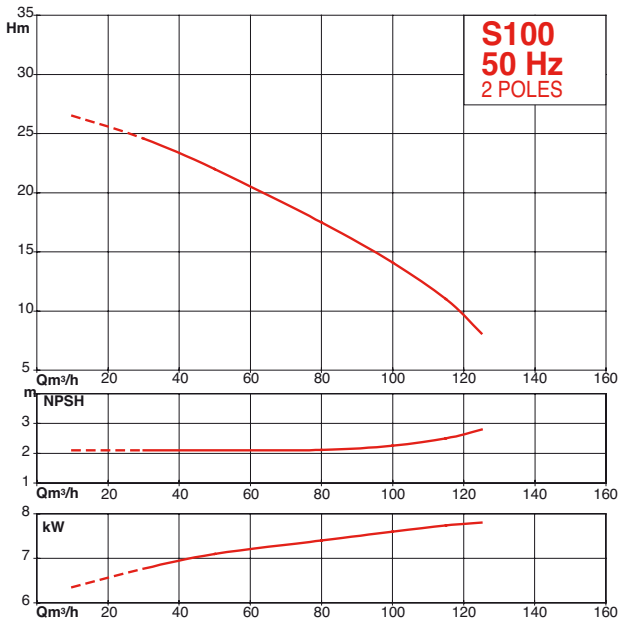

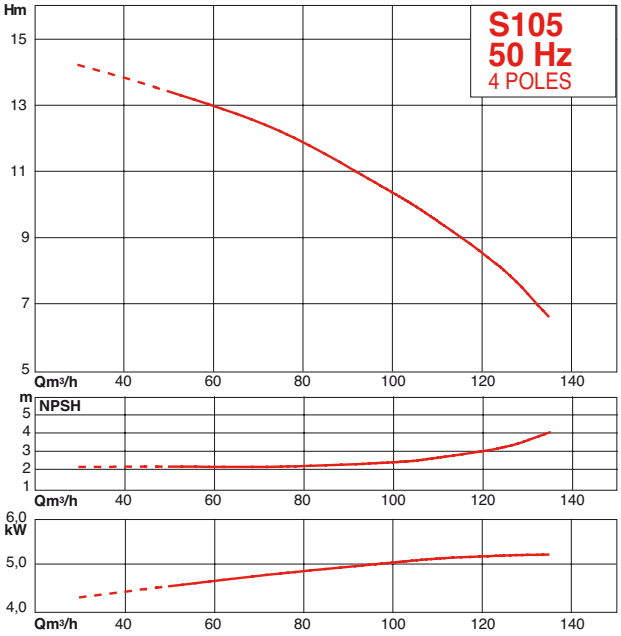

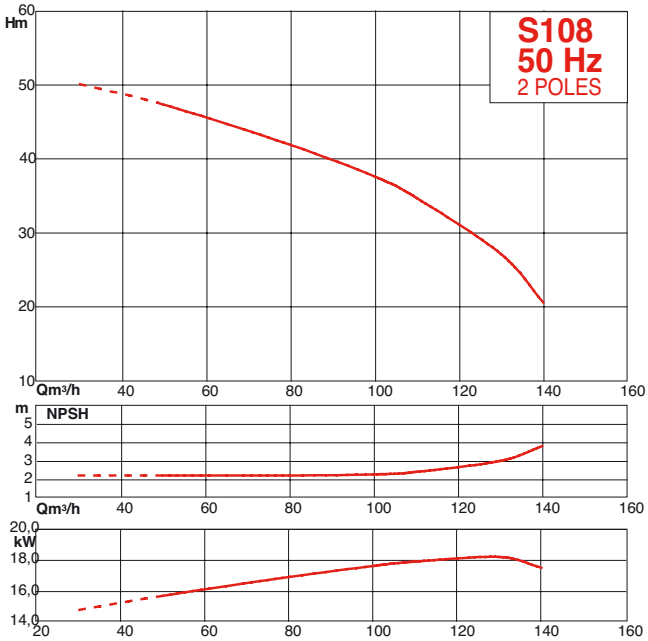

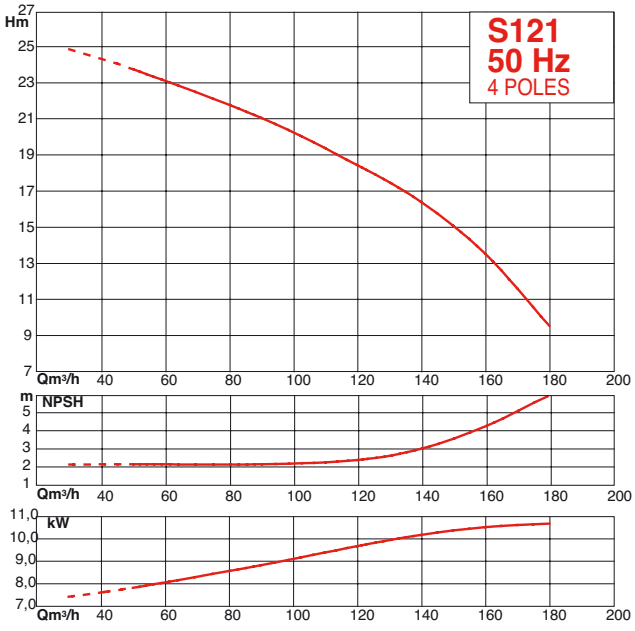

HYDRAULIC PERFORMANCES

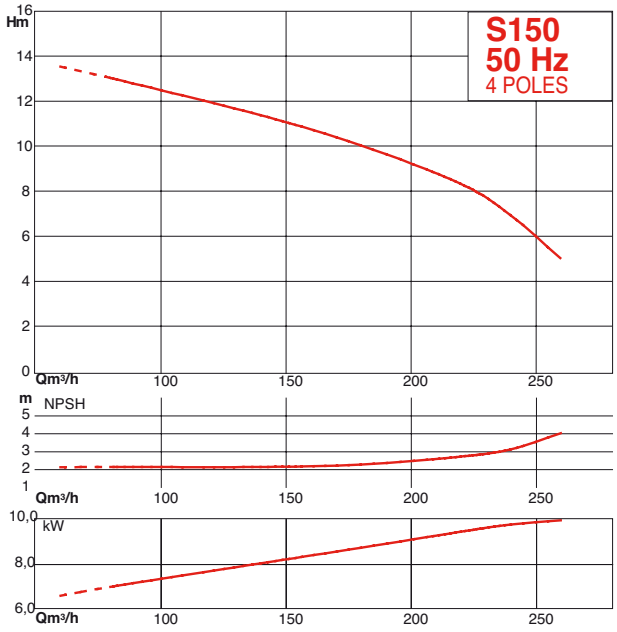

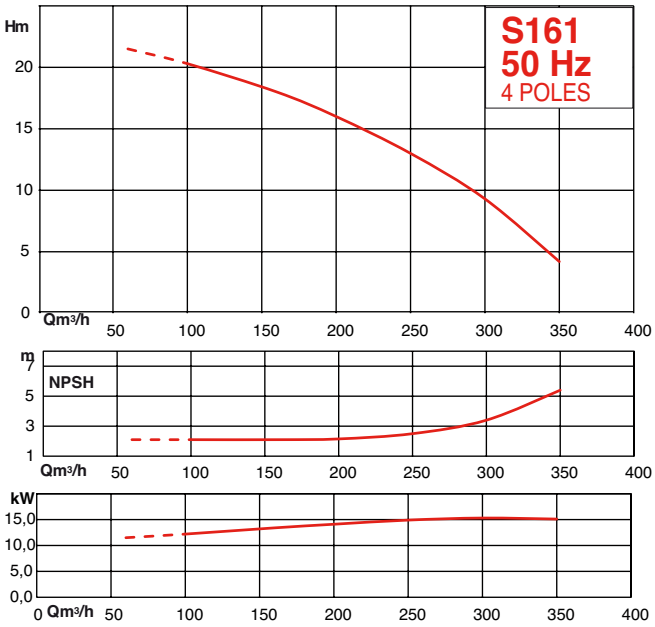

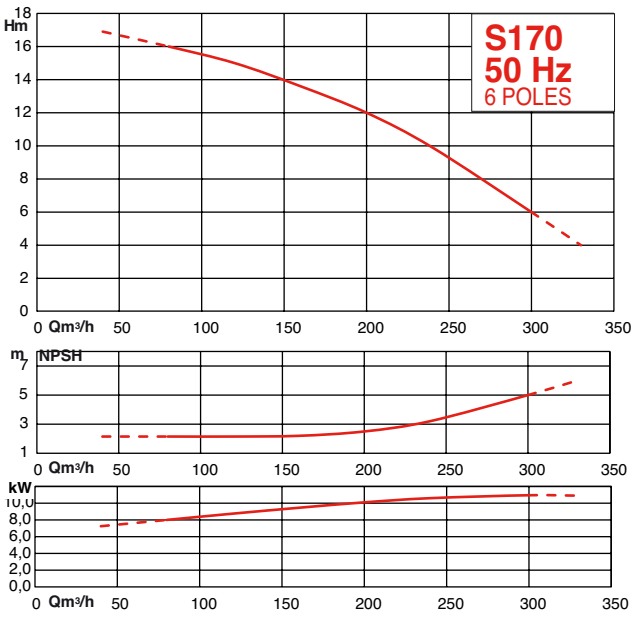

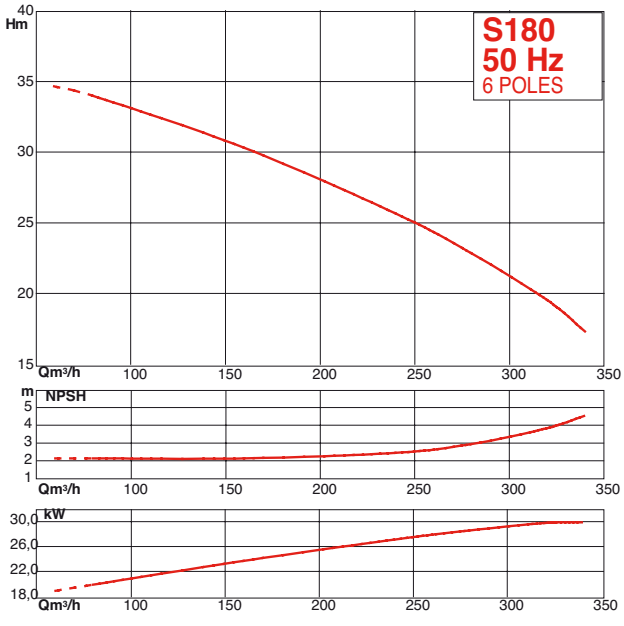

S

HYDRAULIC PERFORMANCES

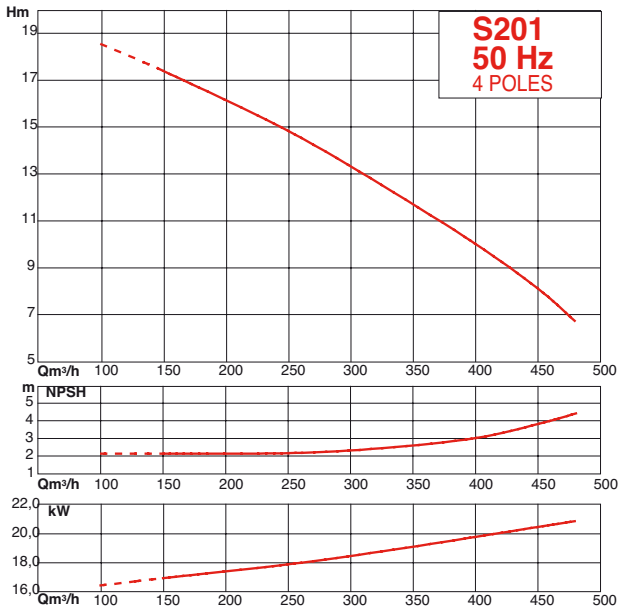

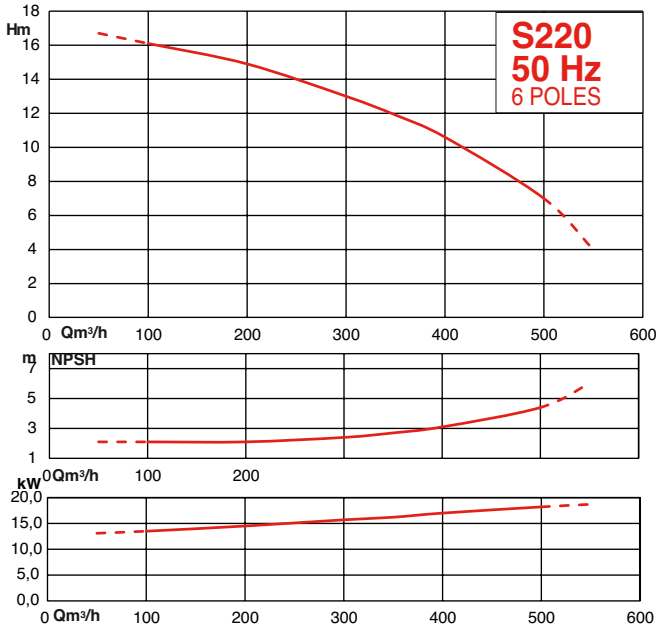

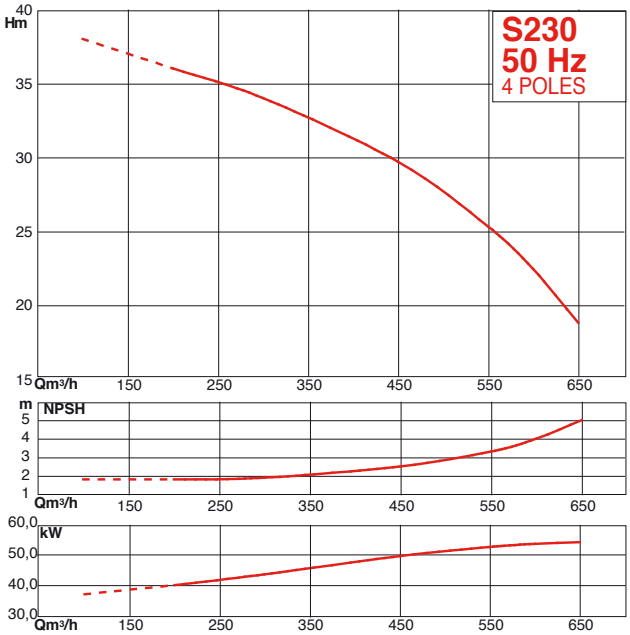

MONOBLOC SPACE REQUIREMENT (11)

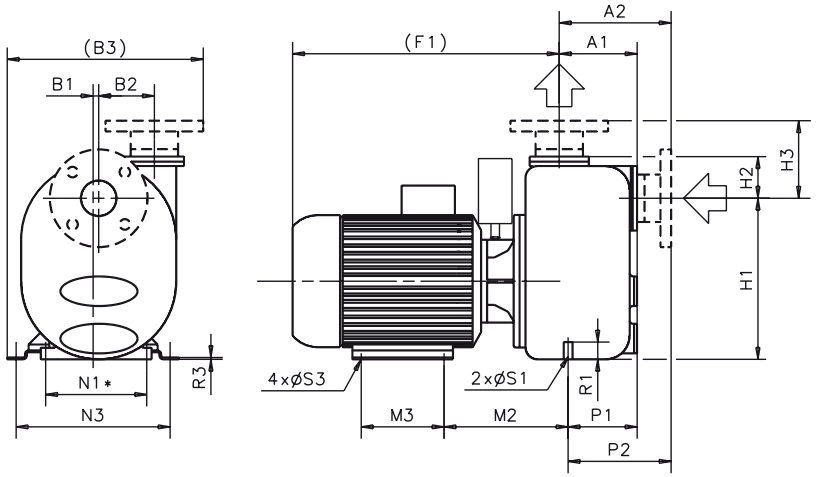

TYPE	Threaded DN	Flanged DN PN16	A1	A2	B1	B2	B3	F1	H1	H2	H3	M2	M3	N1*	N3	P1	P2	R1	R3	S1	S3
40-41-42	1 1/2"	40	97	132	7	29	200	366	187	69	110	186	100	110	190	87	122		1,5	M8	9
45-46	1 1/2"	40	121	156	7	80	273	393	237	74	115	182	125	110	210	111	146		2	M8	9
50-51	2"	50	112	158	9	36	231	428	225	86	133	217	125	110	210	102	158		2	M8	9
60-61	2"	50	112	158	9	36	257	457	267	86	133	234	140	140	240	97	158		3	M8	9
63	2"	50	143	189	9,5	94	317	453	272	86	133	212	140	140	260	128	174		3	M8	9
65-66	2"	50	112	158	9,5	60	309	480	310	86	133	265	140	260	240	88	134	18	3	14	9
68-69	2"	50	112	158	9,5	60	309	597	310	86	133	246	270	260	216	88	134	18	4	14	9
80-82	3"	80	140	188	13	40	283	466	277	102	158	243	140	140	240	125	173		3	M8	9
83	3"	80	170	218	14	85	292	461	277	102	158	220	140	160	260	155	203		3	M8	9
85	3"	80	195	243	16	106	367	459	310	102	158	265	140	260	240	150	198	18	3	14	9
88	3"	80	195	243	16	106	367	576	310	102	158	246	270	260	216	150	198	18	4	14	9
100	4"	100	158	225	18	50	327	616	320	127	200	246	270	260	216	153	220	18	4	14	9

BIBLOC SPACE REQUIREMENT (21)

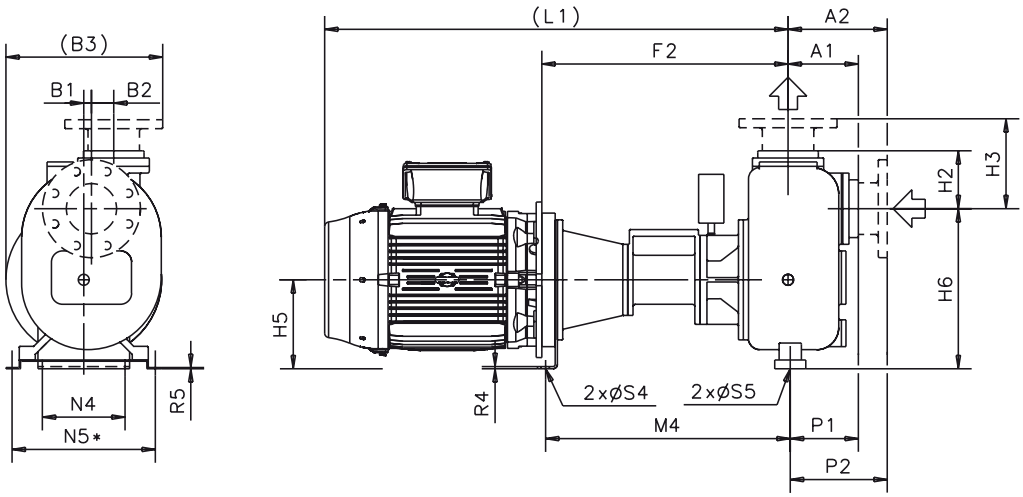

TYPE	Threaded DN	Flanged DN PN16	A1	A2	B1	B2	B3	F2	H2	H3	H5	H6	L1	M4	N4	N5	P1	P2	R4	R5	S1	R5
40-41-42	1 1/2"	40	97	132	7	29	200	311	69	110	110	207	545	337	140	180	87	122	3	3	10	10
45-46	1 1/2"	40	121	156	7	80	273	324	74	115	130	257	605	349	140	200	111	146	3	3	10	10
50-51	2"	50	112	158	9	36	231	359	86	133	130	245	640	384	140	200	102	158	3	3	10	10
60-61	2"	50	112	158	9	36	257	424	86	133	160	295	757	458	200	230	97	158	3	4	12	10
63	2"	50	143	189	9,5	94	317	419	86	133	160	300	792	458	250	230	128	174	5	4	14	10
65-66	2"	50	112	158	9,5	60	309	483	86	133	160	310	816	526	200	260	88	134	3	18	12	14
68-69	2"	50	112	158	9,5	60	309	535	86	133	180	330	1013	588	250	260	88	134	6	38	14	11
80-82	3"	80	140	188	13	40	283	433	102	158	160	305	766	467	200	230	125	173	3	4	12	10
83	3"	80	170	218	14	85	292	423	102	158	160	305	796	461	250	250	155	203	5	4	14	10
85	3"	80	195	243	16	106	367	462	102	158	160	310	795	526	200	260	150	198	3	18	12	14
88	3"	80	195	243	16	106	367	514	102	158	180	330	992	588	250	260	150	198	6	38	14	11
100	4"	100	158	225	17,5	50	327	554	127	200	180	340	1032	588	250	260	153	220	6	38	14	11
105	4"	100	228	295	17	107	349	493	127	200	180	345	866	551	250	260	193	260	5	18	14	14
108	4"	100	228	295	17	107	383	596	127	200	180	345	1074	666	250	260	193	260	6	18	14	14
121	4"	100	248	315	19	143	412	612	122	195	220	390	1090	676	250	295	213	280	6	18	14	14
150		150	103	340	26	109	445,5	660,5	140	243	200	380	1199	725	250	295	202	340	6	18	14	14
161		150	237	340	26	139	506,5	670,5	140	243	230	410	1283,5	740	250	315	202	340	6	18	14	14

SPACE REQUIREMENT ON BASE (31)

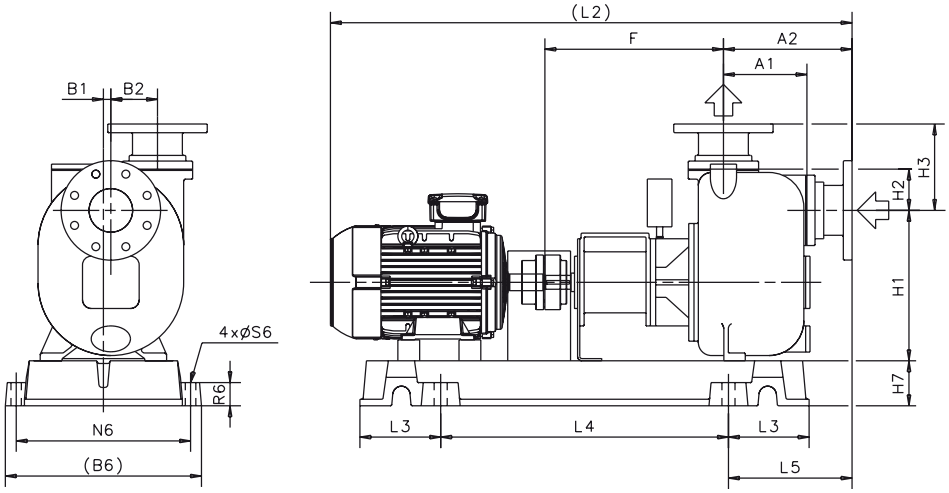

TYPE	Flanged DN PN16	A1	A2	B1	B2	B6	F	H1	H3	H7	L2	L3	L4	L5	N6	P1	P2	R6	S6
170	150	279	382	26	173	610	602	490	249	103	1686	250	940	502	550	229	332	53	29
180	150	279	382	26	173	610	602	490	249	103	1870	250	940	502	550	229	332	53	29
201	200	339	471	36	140	610	617,5	461	300	103	1855,5	250	940	596	550	294	426	53	29
220	200	340	463	36	179	610	622	530	283	103	1852	250	940	583	550	290	413	53	29
230	200	340	463	36	179	660	622	530	283	123	2050	290	1060	623	600	290	413	63	29

SPACE REQUIREMENT ON BASE WITH SPACER (32)

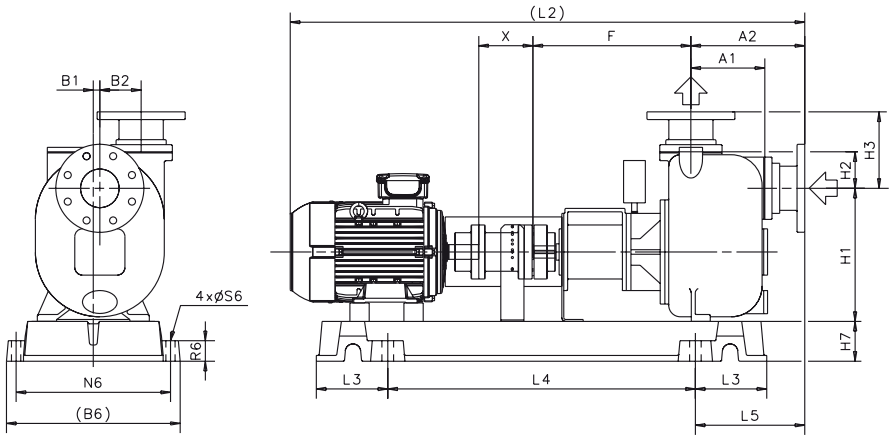

TYPE	Flanged DN PN16	A1	A2	B1	B2	B6	F	H1	H3	H7	L2	L3	L4	L5	N6	P1	P2	R6	S6	X
170	150	279	382	26	173	660	602	490	249	123	1826	290	1060	542	600	229	332	63	29	140
180	150	279	382	26	173	660	602	490	249	123	2010	290	1060	542	600	229	332	63	29	140
201	200	339	471	36	140	660	617,5	461	300	123	1995,5	290	1060	636	600	294	426	63	29	140
220	200	340	463	36	179	660	622	530	283	123	1992	290	1060	623	600	290	413	63	29	140
230	200	340	463	36	179	660	622	530	283	123	2190	290	1060	623	600	290	413	63	29	140

S

BARE SHAFT PUMP SPACE REQUIREMENT (35)

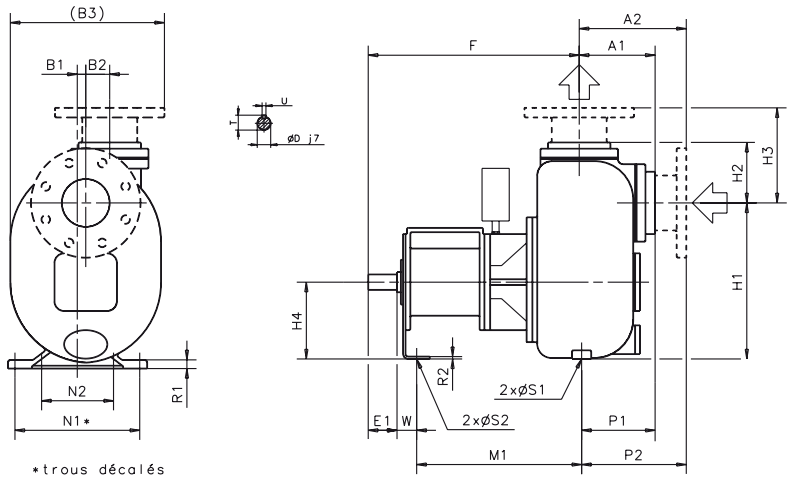

TYPE	Threaded DN	Flanged DN PN16	A1	A2	B1	B2	B3	D	E1	F	H1	H2	H3	H4	M1	N1*	N2	P1	P2	R1	R2	S1	S2	T	U	W
40-41-42	1 1/2"	40	97	132	7	29	200	19	40	267	187	69	110	90	202	110	80	87	122		3	M8	10	21,5	6	35
45-46	1 1/2"	40	121	156	7	80	273	19	40	270	237	74	115	110	200	110	100	111	146		3	M8	10	21,5	6	40
50-51	2"	50	112	158	9	36	231	19	40	305	225	86	133	110	235	110	100	102	158		3	M8	10	21,5	6	40
60-61	2"	50	112	158	9	36	257	28	60	361	267	86	133	132	273	140	125	97	158		4	M8	13	31	8	42,5
63	2"	50	143	189	9,5	94	317	28	60	336	272	86	133	132	248	140	125	128	174		4	M8	13	31	8	43
65-66	2"	50	112	158	9,5	60	309	28	60	421	310	86	133	160	344	260	150	88	134	18	5	14	14	31	8	41
68-69	2"	50	112	158	9,5	60	309	28	60	421	310	86	133	160	344	260	150	88	134	18	5	14	14	31	8	41
80-82	3"	80	140	188	13	40	283	28	60	370	277	102	158	132	282	140	125	125	173		4	M8	13	31	8	43
83	3"	80	170	218	14	85	292	28	60	340	277	102	158	132	252	160	125	155	203		4	M8	13	31	8	43
85	3"	80	195	243	16	106	367	28	60	400	310	102	158	160	344	260	150	150	198	18	5	14	14	31	8	41,5
88	3"	80	195	243	16	106	367	28	60	400	310	102	158	160	344	260	150	150	198	18	5	14	14	31	8	41,5
91	3"	80	211	259	14	135	419	32	80	491	350	97	153	200	387	295	150	175	223	18	6	14	14	35	10	60
100	4"	100	158	225	18	50	327	28	60	440	320	127	200	160	344	260	150	153	220	18	5	14	14	31	8	41,5
105	4"	100	228	295	17	107	349	28	60	410	345	127	200	180	344	260	150	193	260	18	5	14	14	31	8	41
108	4"	100	228	295	17	107	383	32	80	487	345	127	200	180	392	260	150	193	260	18	5	14	14	35	10	50
121	4"	100	248	315	19	143	412	32	80	497	390	122	195	220	392	295	150	213	280	18	6	14	14	35	10	60,5
150		150	103	340	26	109	446	32	80	547	380	140	243	200	447	295	150	202	340	18	6	14	14	35	10	55
161		150	237	340	26	139	507	32	80	557	410	140	243	230	457	315	150	202	340	18	6	14	14	35	10	55
170		150	279	382	26	173	580	42	90	602	490	146	249	280	489	380	260	229	332	25	8	18	18	45	12	77
180		150	279	382	26	173	580	42	90	602	490	146	249	280	489	380	260	229	332	25	8	18	18	45	12	77
201		200	339	471	36	140	583	42	90	618	461	168	300	280	500	410	260	294	426	25	8	18	18	45	12	77
220		200	340	463	36	179	642	42	90	622	530	160	283	310	509	450	260	290	413	25	8	18	18	45	12	73
230		200	340	463	36	179	642	42	90	622	530	160	283	310	509	450	260	290	413	25	8	18	18	45	12	73

OPERATING LIMITS

Flow up to:	**14m³/h**
Head up to:	**20 mCE**
Max. water temperature:	**+ 5° to 100°C**
ND of discharge ports:	**G1 to G1$^{1/2}$**
Solids size at	**GV 28 : 5 mm**
impeller passage	**GV 50 : 7 mm**

GV 28 - GV 50

VERTICAL SUMP PUMPS
Lifting - Dewatering - Draining
50 Hz

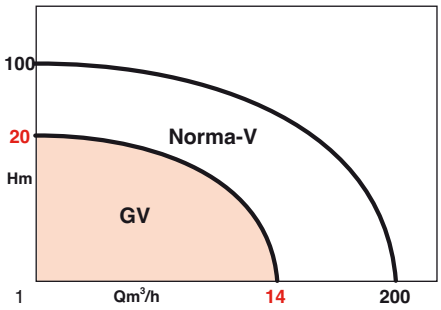

APPLICATIONS

Permanent installation pumps specially suited for lifting sewage from:
- boiler room sumps,
- general services plant rooms,
- flooded cellars or basements,
- evacuation of seepage water,
- dewatering of condensates…

And for any pumping duties of clear or slightly particulate laden water.

ADVANTAGES

- **Highly reliable components.**
- **Rugged and corrosion resistant.**
- **No sealing system subject to wear.**
- **Fully automatic.**
- **Silent operation.**
- **No counterweight, rigid float rod held at top and bottom.**
- **Rotating discharge port (through 180°).**
- **Simplified installation and start up**
- **Low maintenance.**
- **Available in a version with 316 stainless steel connecting and delivery pipe.**

• Connection to installation by union or flange + screw-on counter-flange

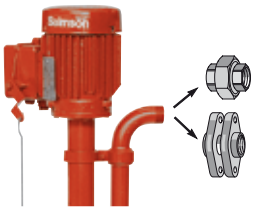

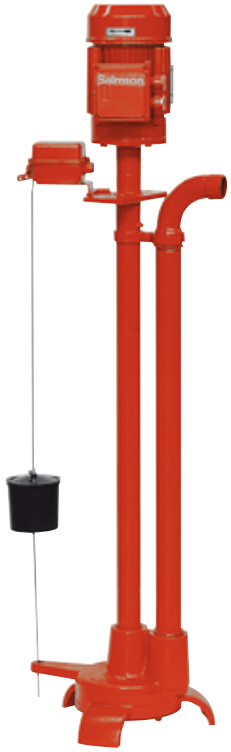

• GV 50, motor with independant switch



• GV 28, motor with built-in switch

GV 28 - GV 50

DESIGN

• Pump

- Centrifugal, vertical shaft.
- Special pump casing with discharge branch directed upwards.
- Horizontal discharge port.
- Suction casing with strainer forming a tripod and supporting the motor-pump unit.
- Long pump shaft, enclosed and protected by a branch and guided at the bottom by a sleeve bearing which is self-lubricated by the liquid pumped.
- Semi-open impeller.
- Automatic control by float switch, the level adjustable by means of sliding stops.

• Motor

- Sealed, ventilated with flanged end casing.
- Vertical shaft pinned to the pump.
- Special built-in switch for GV 28.

Speed :	2900 rpm
Winding	1-ph :230 V
	3-ph : 230-400 V
Frequency :	50 Hz (optional 60 Hz)
Insulation class :	F
Protection :	IP 55
EC conformity :	PR EN 809

STANDARD CONSTRUCTION

Main parts		Material
Bottom sleeve bearing		Sintered bronze
Suction strainer		Noryl (GFN 3)
Float		Polypropylene*
Casing		Cast iron (GJL 250)
Bedplate		Cast iron (GJL 250)
Semi-open impeller	GV 28	Stainless steel (Z30 C13)
	GV 50	Cast iron (GJL 250)
Pump shaft		Stainless steel X30Cr13

* Filled with glass fibre

HYDRAULIC PERFORMANCES AT 2900 RPM

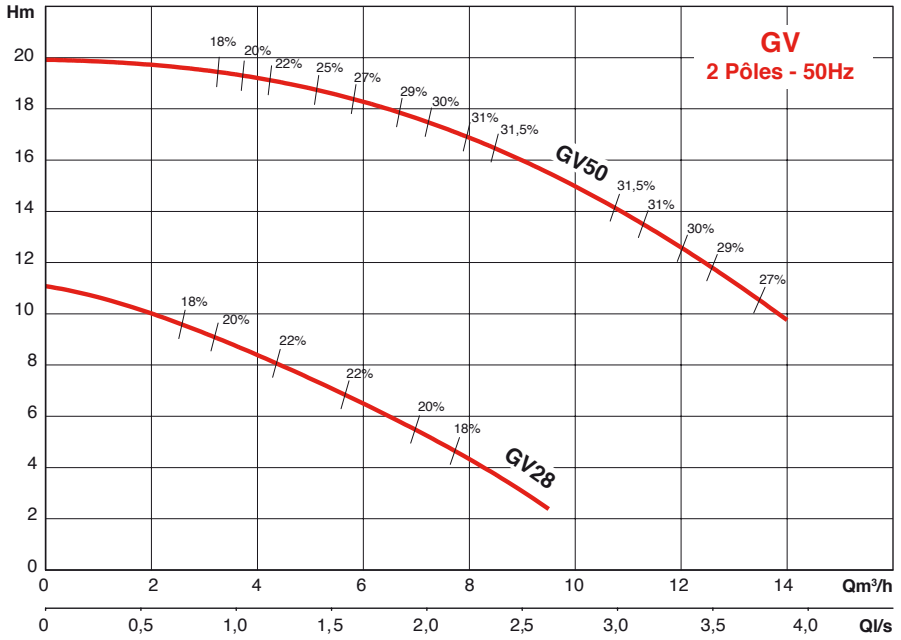

INSTALLATION DIAGRAMS

• **GV 28 or GV 50** pump set directly on floor

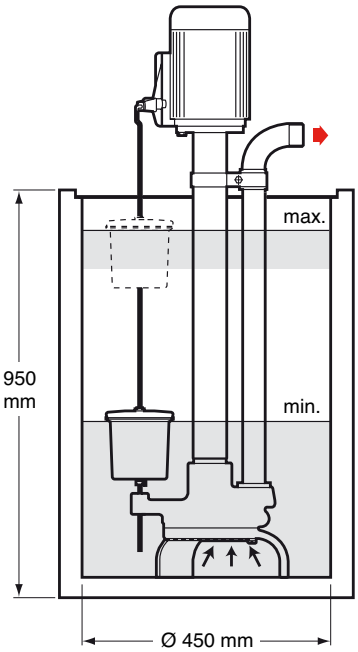

• **GV 50** pump suspended and attached to 2 perfectly horizontal supports

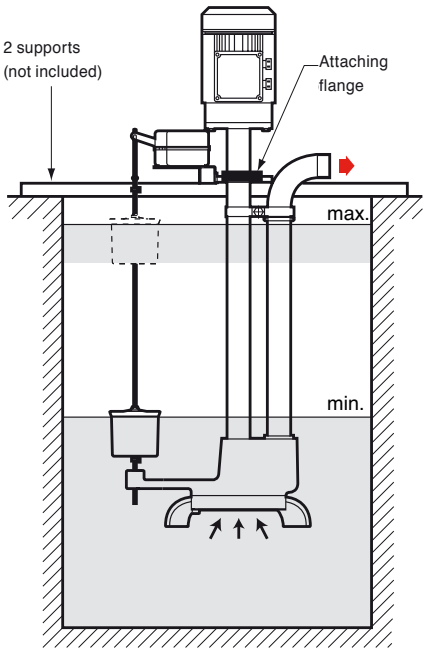

NOTE: The pump is primed only when its casing is immersed. Depending on the adjustment of the float's top and bottom stops, the electrical switch controls the automatic starting and stopping of the pump.

SECTIONAL VIEW

• GV 28

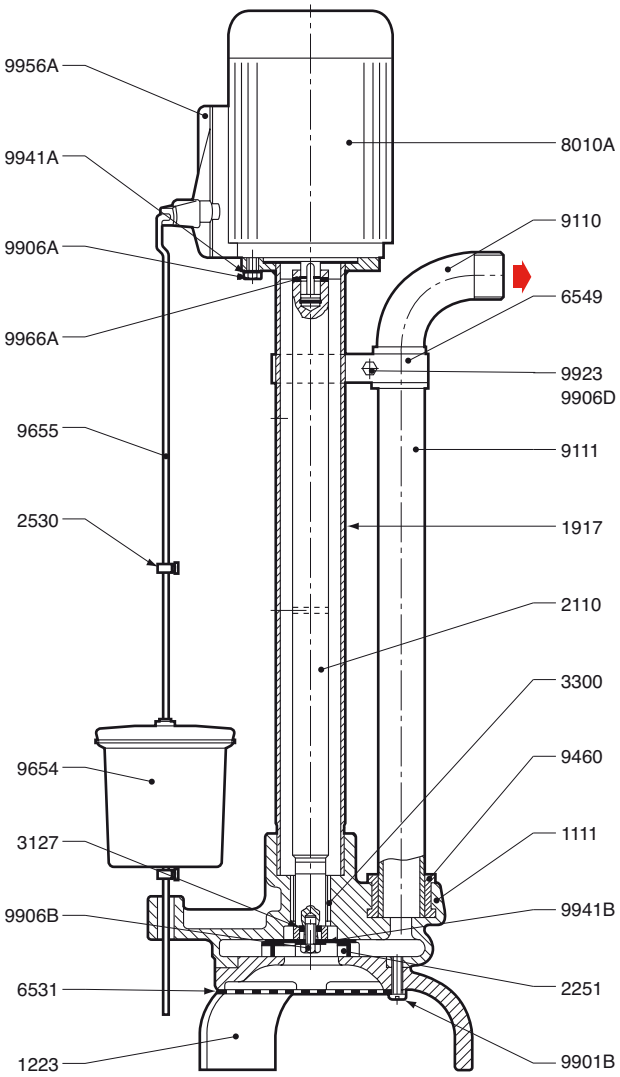

• GV 50

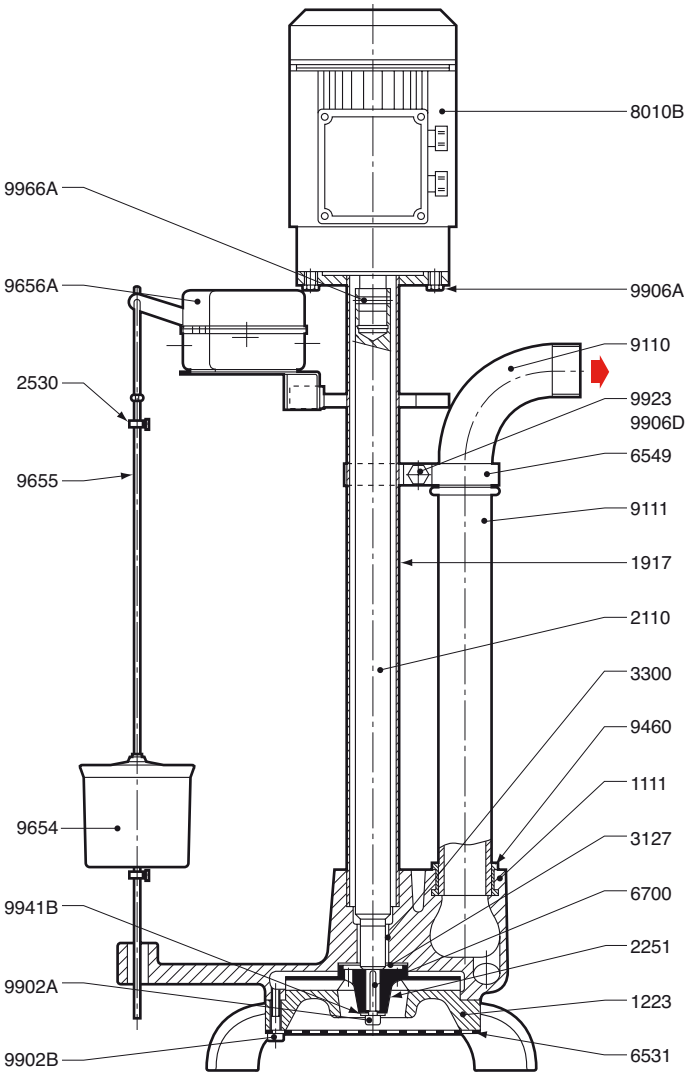

1111 - Pump casing
1223 - Suction end casing-tripod
1917 - Pump shaft connecting and protection tube
• 2110 - Pump shaft
• 2251 - Semi-open impeller
2530 - Top and bottom stops
• 3127 - Adjustment washer
• 3300 - Bottom sleeve bearing
6531 - Suction strainer
6549 - Tube collar
• 6700 - Impeller key (GV 50)
• 8010A - Special electric motor (GV 28)
• 8010B - Electric motor (GV 50)
9110 - Discharge elbow
9111 - Discharge pipe
• 9460 - Sealing ring
• 9654 - Float
9655 - Float rod
• 9656 - Switch built into motor of GV28
• 9656A - Separate switch (GV50)
9901B - Strainer-suction end casing attachment screw (GV28)
9902A - Impeller attachment screw (GV50)
9902B - Strainer-suction end casing attachment screw (GV50)
9906A - Motor attachment screw
9906B - Impeller attachment screw (GV28)
9906D - Collar attachment screw
9923 - Nut of screw 9906D
9941A - Washer under screw 9906A
9941B - Washer under impeller attachment screw
• 9966A - Pump-motor shaft coupling spring pin

(•) Recommended spare parts

GV 28 - GV 50

ELECTRICAL DATA AND DIMENSIONS

• **GV 28**

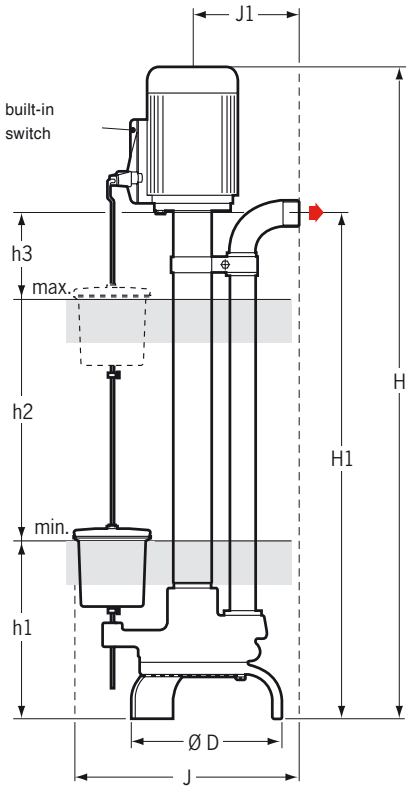

• **GV 50**

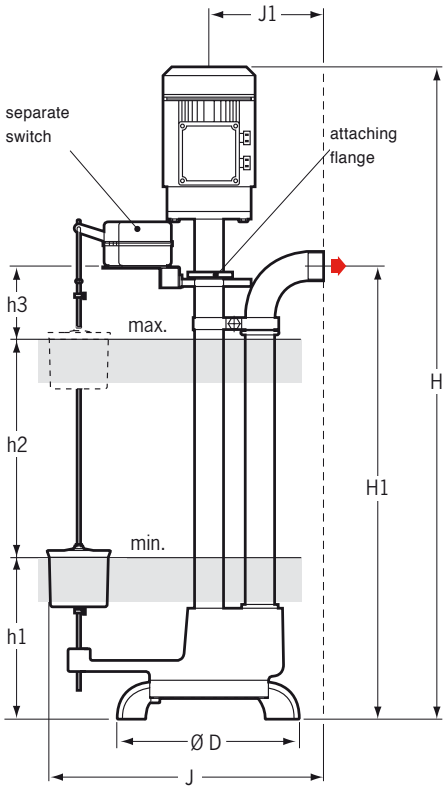

Fixing Flange

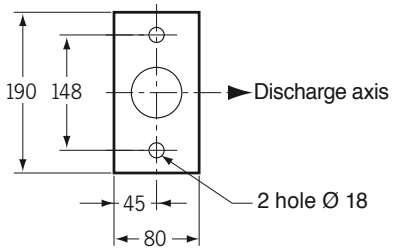

ORDER REFERENCE	MOTOR					PUMP								weight
	P2	I(A)			DNR	H	J	H1	Ø D	h1	h2	h3	J1	
	kW	1x230V	3x230V	3x400V	disch. thread.	mm	mm	mm	mm	mm	mm	mm	mm	kg
GV 28 M/T	0,37	3,90	1,59	1	1"	1247	300	1020	230	160	610	250	141	36
GV 50 T	2,20	—	7,60	4,40	1"1/2	1400	458	1034	325	130	740	130	190	75

FEATURES

a) Electrical data

- GV 28 M: single-phase 230 V - 50 Hz. with built-in capacitor (40μF x 320 V).
- GV 28 T and GV 50 T: 3-phase 230-400 V - 50 Hz.
- Motor must be protected by circuit breaker.

Switch

• GV 28: built into the motor.
• GV 50: separate from the motor.

Electrical connection via cable gland

• GV 28: of the switch.
• GV 50: on the motor and the switch.

b) Installation

- On perfectly horizontal floor.
- Shaft always vertical.

GV50: can be suspended and attached by its flange to 2 supports (see sketches on previous pages).

Connection to the installation

- By threaded pipe, screwed on either a union or flange + screw-on oval counter-flange PN6 (optional).

c) Packaging

- Supplied in wood box, rod and float fixed and protected against impacts.

d) Maintenance

- Repair: see recommended spare parts (•) subject to wear.

ACCESSORIES

• Union or,
• Flange and screw-on oval counter-flange PN6.
• Thermal protection relay for single-phase or three-phase motor (maximum 10A.



MINI SVO

SUBMERSIBLE PUMPS
Lifting of domestic waste and sewage water
2 pole - 50 Hz

OPERATING LIMITS

Flow rates up to:	**22 m³/h**
Head up to:	**10 m CL**
Temperature range:	**0 to + 40°C***
Max immersion depth:	**5 m**
Max free passage:	**Ø 40 mm**
ND discharge port:	**R1$^{1/2}$**

* max 60°C during 10 min

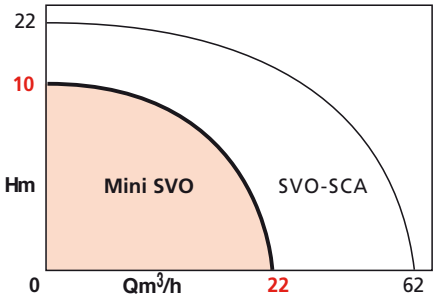

APPLICATIONS

Lifting of domestic waste water:
- sewage water
- rain water loaded with mud and non rigid particles with traces of hydrocarbons or washing products.

For:
- Housing.
- Garages.
- Parking lots.
- Restaurants.
- Boiler rooms.

ADVANTAGES

- **Suited for small sumps: small size and vertical discharge port**
- **Reliable: double sealing (mechanical seal + lip seal) and vortex impeller**
- **Safety in case of motor out-of-water occasional operation.**
- **Long life: tough materials**
- **Automatic operation: integrated float switch (single-phase version) ; optional (three-phase version).**
- **No particular maintenance. Easy impeller cleaning thanks to fast disassembly. Low weight.**
- **Supplied ready for fitting (single-phase version)**
- **Quiet operation**

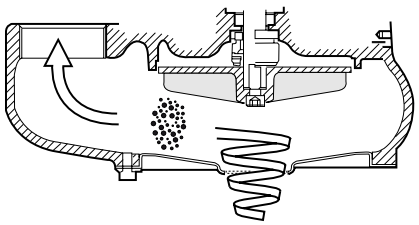

VORTEX impeller



• MINI-SVO-204-0.6MF

MINI SVO

DESIGN

• Hydraulic part

- Single block, centrifugal single-stage impeller.
- Axial suction under pump casing.
- Vertical discharge.
- G1$^{1/2}$ threaded port.
- Vortex impeller.
- Double sealing at shaft passage by mechanical and lip seals.

• Motor

- Submersible to semi-submersible
- Oil bath.

Single-phase version: automatic start and stop by float switch, thermal protection by automatic reset integrated probe, condenser integrated.
Three-phase version: mandatory thermal protection to be added.

Rotation speed :	2900 rpm
Windings, 1-phase :	230V
3-phase :	400V
Frequency :	50 Hz
Insulation category :	130(B)
Protection index :	IP 68

STANDARD CONSTRUCTION

Main parts	Material
Pump casing	Cast iron GJL200
Motor sleeve	Stainless Steel 304
Motor shaft	Stainless Steel 416
Suction lid	Stainless Steel 304
Vortex impeller	Composite
Mechanical seal	Carbon/alumin

IDENTIFICATION

MINI-SVO 2 04 - 0.6 M F

- Domestic pump Submersible with vortex impeller
- 2 : 2 pole
- ND discharge in cm
- P2n motor power in kW
- M : single-phase T : three-phase
- F : supplied with a float

HYDRAULIC PERFORMANCES

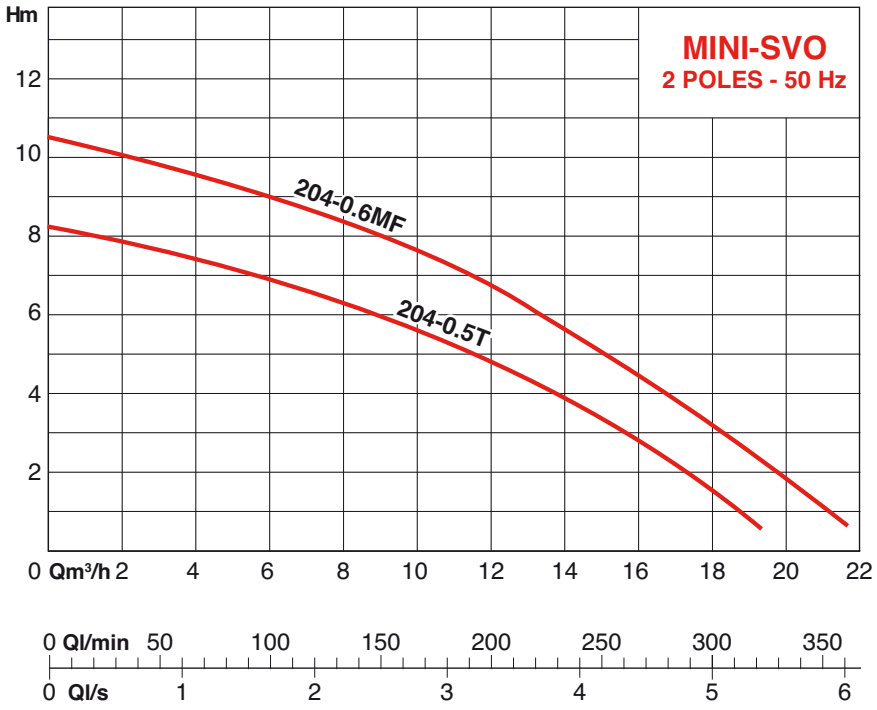

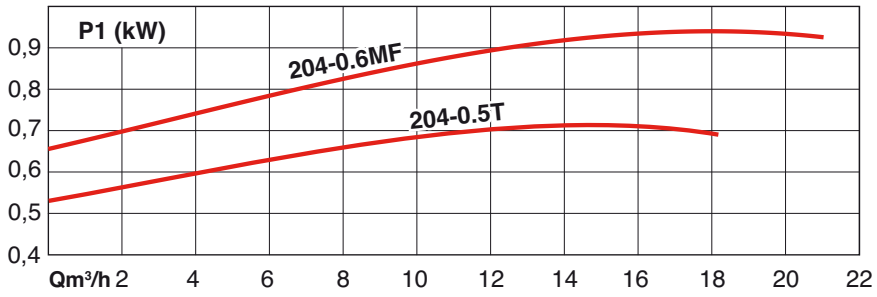

SECTIONAL VIEW (MINI-SVO-204 0.6MF)

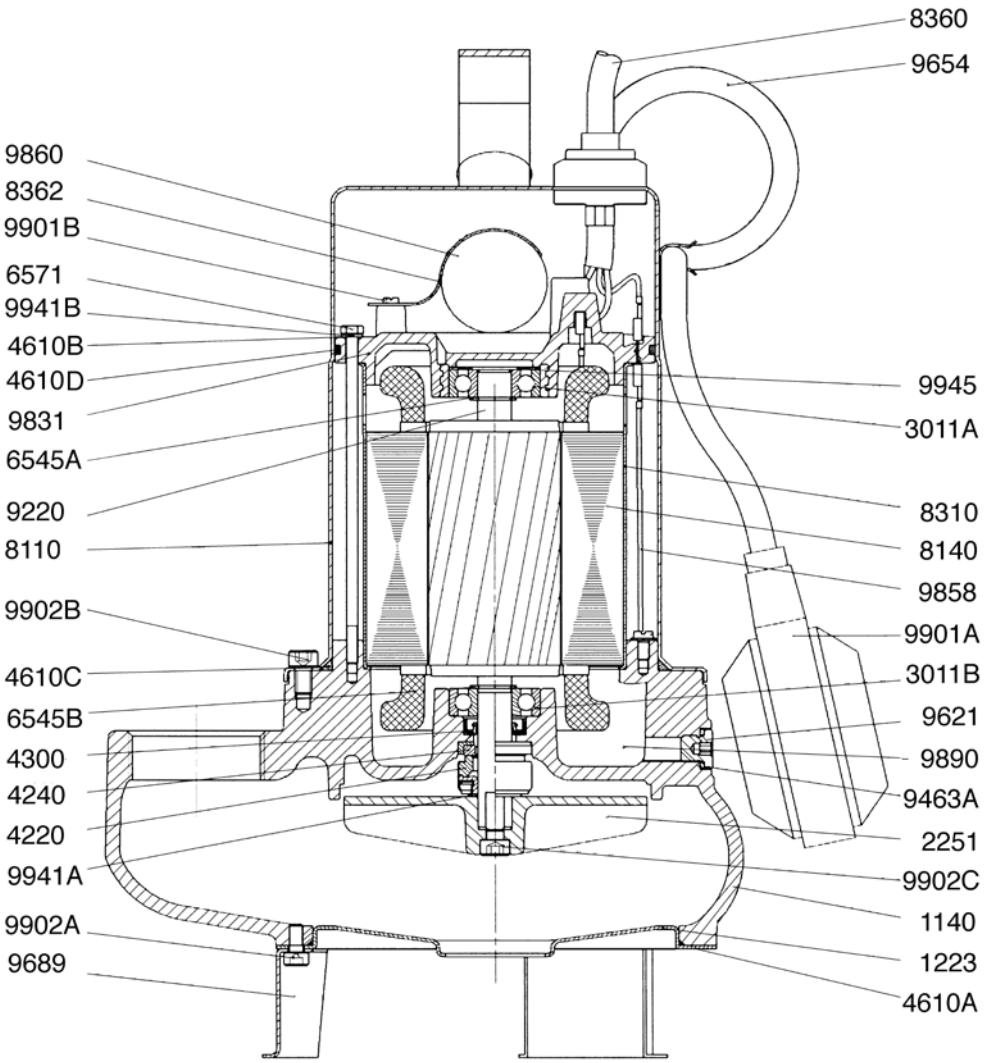

1140 - Discharge casing
1223 - Suction lid
• 2251 - Vortex impeller
3011A - Upper bearing
3011B - Lower bearing
• 4220 - Mechanical seal rotating part
• 4240 - Mechanical seal fixed part
• 4300 - Sealing lip ring
• 4610A - O-ring (between 1140 and 1223)
4610B - O-ring (under 9941B)
• 4610C - O-ring (between 1140 and 8110)
• 4610D - O-ring (between 9831 and 8110)
6545A - Upper clip
6545B - Lower clip

6571 - Assembly strut
8110 - Motor sleeve
8140 - Stator
8310 - Stator sleeve
• 8360 - Supply cable with plug and connector
8362 - Jumper
9220 - Rotor shaft
• 9463A - Sealing ring under 9621
9621 - Oil chamber cap
• 9654 - Float cable
• 9689 - Support foot
9831 - Rear bearing flask
9858 - Ground wire
• 9860 - Condenser
9890 - Oil

• 9901A - Ground screw
9901B - Jumper fitting screw
9902A - Bracket foot fitting screw
9902B - Motor sleeve fitting screw
9902C - Wheel fitting screw
9941A - Mechanical seal support washer
9941B - Washer under strut 6571
9945 - Elastic washer

(•): recommended spare parts

MINI SVO

INSTALLATION DIAGRAMS

• **Simplified installation MINI-SVO** with single phase motor with its float.

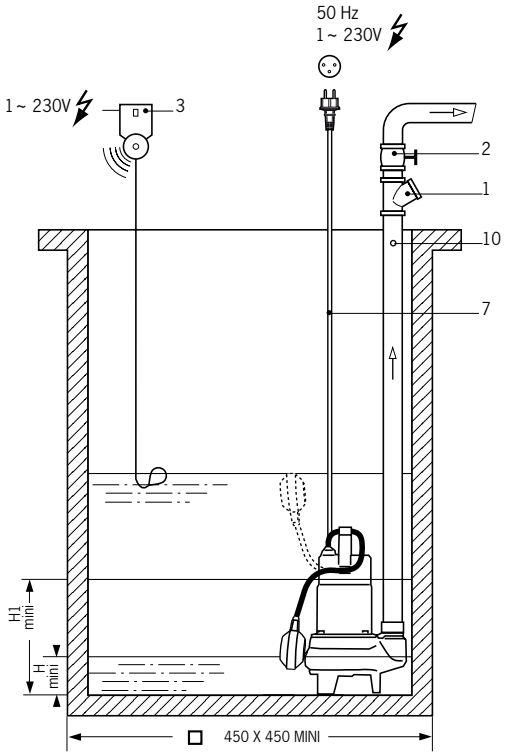

1 - Check valve suited for the fluid pumped.
2 - Isolating valve
3 - Overflow sound alarm
4 - Discontactor to a float switch: pump ON/OFF
5 - Cable (not supplied)
6 - Control and protection box
Yn 4100 (1 pump with 3 level regulators) or
Yn 4200 (2 pumps with 4 level regulators).
7 - Electric cable 5m
8 - Dual pump manifold
9 - Regulator cable wall support
10 - Purging hole to be performed

In discontinuous operation H min = 90 mm
In constant operation H1 min = 230 mm

• **Fixed installations with 1 or 2 MINI-SVO** three phase motors

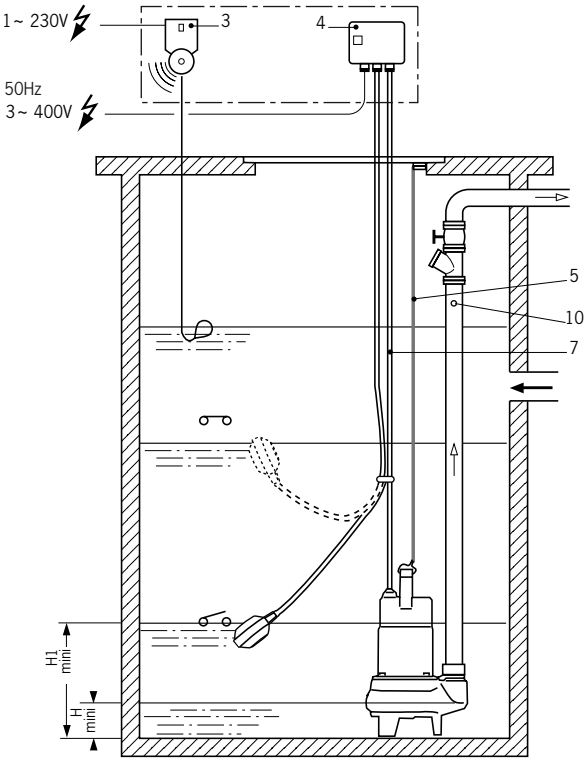

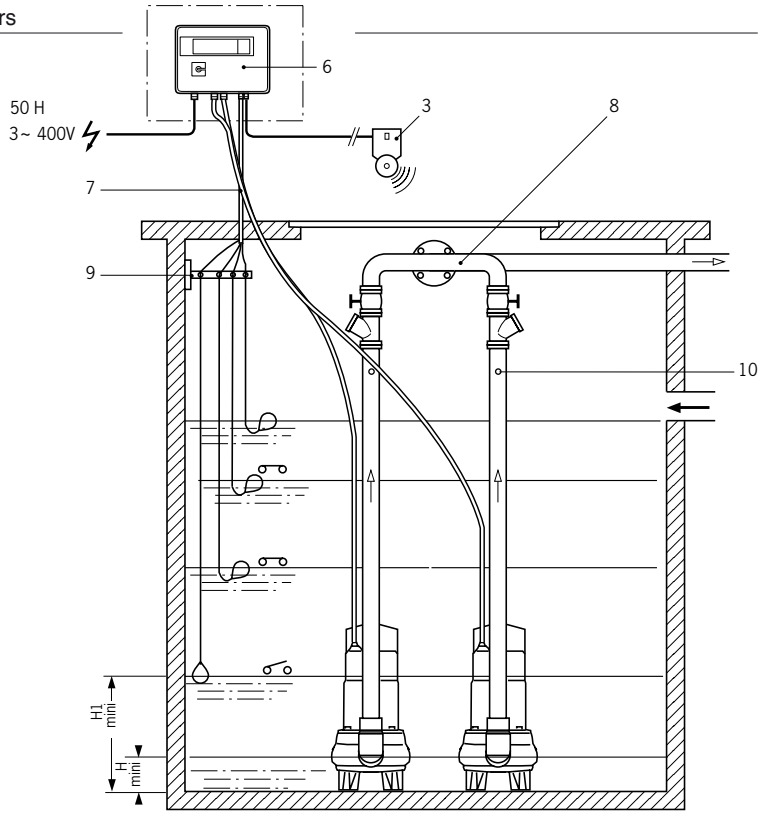

ELECTRICAL DATA AND DIMENSIONS

• **MINI-SVO-204-0.6MF**

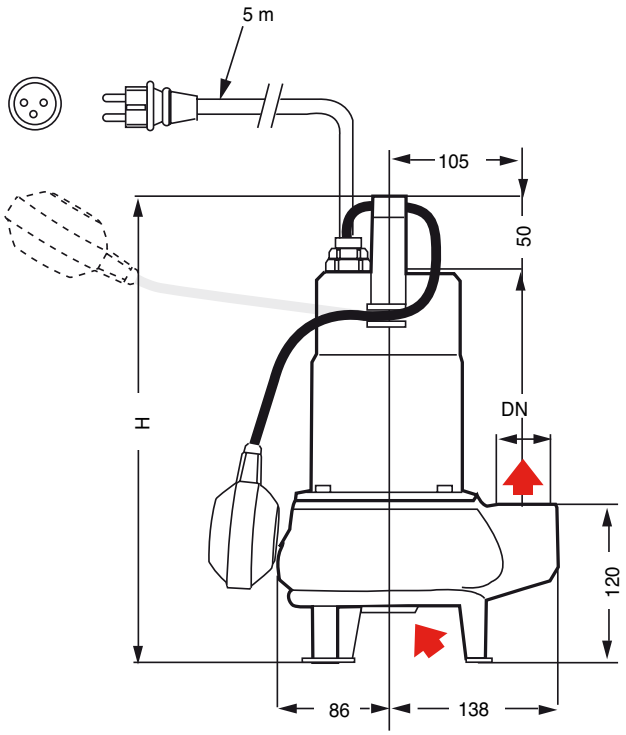

• **MINI-SVO-204-0.5T4**

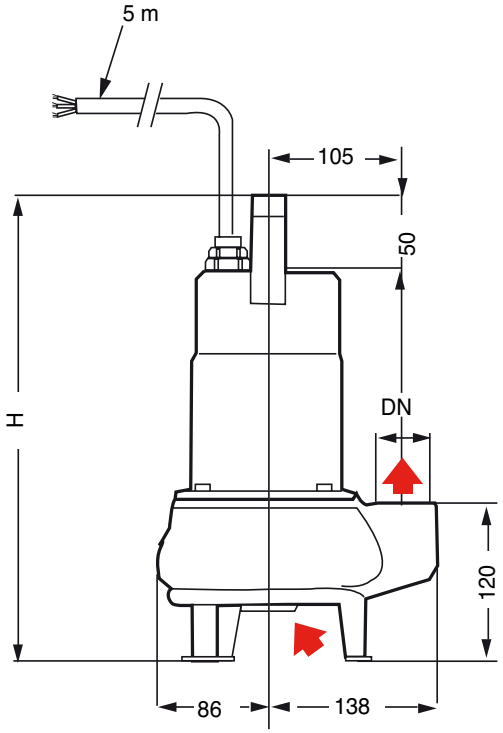

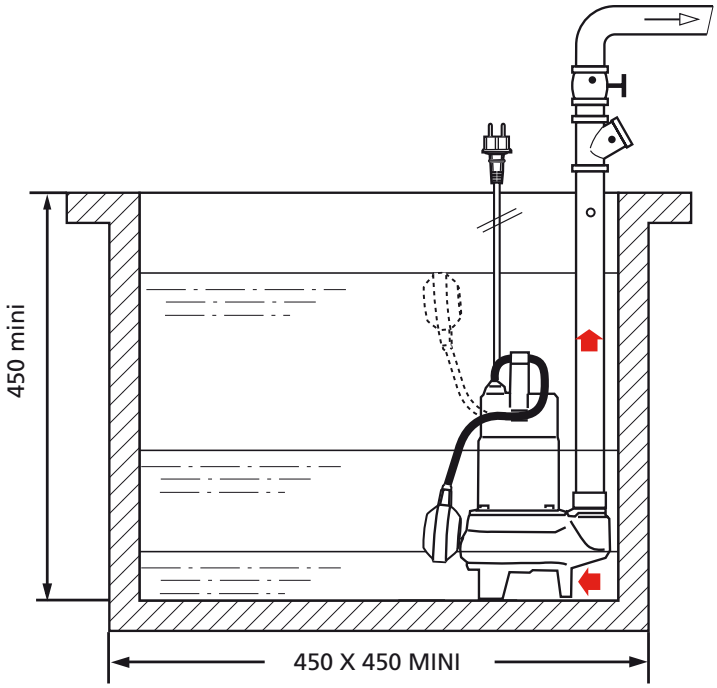

ORDER REFERENCE	P1	I(A)		Cond.	DND	DNS	H maxi	L. cable	Weight
	kW	1~230V	3~400V	µF		Ø mm	mm	m	kg
MINI-SVO-204-0.5T4	0.68	–	1,9	–	G11/2	40	352	5	11
MINI-SVO-204-0.6MF	0.94	4,7	–	14	G11/2	40	367	5	12

MINI SVO

CONTROL SYSTEMS

Electronic control and protection boxes

Models	YN 3000	YN 7000	MS Lift
			
Application	For controlling levels in a sump by an IPAE sensor (not provided)	For running a submersible pump, lift-pump or pressure booster.	For controlling levels in a fixed installation, dry sump or dry pit type
Number of pumps			
1 pump	YN3100	YN7100	1x4kW
2 pumps	YN3200	-	2x4kW
Characteristics			
1x230V	yes	yes	yes
3x230V	no	yes	no
3x400V	yes	yes	yes
Max. power per pump	4Kw	11Kw	4Kw
Intensity			
Single phase	0,3 to 12A	1 to 23A	1,5 to 12A
Three-phase	0,3 to 10A	1 to 23A	1,5 to 12A
Frequency	50/60Hz	50/60Hz	50/60Hz
Protection class	IP65	IP54	IP54
Level detectors			
Float switch	yes	yes	yes
1 pump	3	1 ou 2	2
2 pumps	4	no	3
IPAE Sensor	yes	-	-
Level electrode	-	2 provided	-

Level detectors		TYPE OF INSTALLATION			Length of cable
		Deep sump installation	**Transportable installation**	**Fixed installation**	in metre
Governed by level electrodes		**Recommended**	Incompatible	Possible	solde in mètre
Muddy water: Float switch Euroflot 430		Incompatible	Possible	Possible	10 ou 20
Governed by IPAE piezometric sensor		Possible	Possible	**Recommended**	10 ou 30

• ALARMSON



FEATURES

a) Electrical

– single phase 230V – 50 Hz.

Permanent capacitor and thermal protection by sensor built into the pump.

Connection to mains supply by standard male plug, 2 pin + earth.

- Three-phase 400V – 50 Hz.

Thermal protection against excess current essential, using circuit-breaker switch or control and protection box.

b) Fitting

- Fixed installation in sump.
- Motor axis always vertical.
- Rigid pipework.

c) Packaging

- Single phase and three-phase pumps delivered wrapped inside recyclable cardboard box, with 5 m of cable and handle.
- Single phase pump delivered with float switch and electric plug.

d) Maintenance

- See recommended spare parts (•) or the following kits :

- "Water-tightness" kit: mechanical seal + lip seal and gaskets. (All versions). Ref. : 4051807

- "Cable and float" kit: power cable with plug + float cable and connector, the whole factory-assembled. . (3~ Version). Ref. : 4051816

- "Electrical supply cable kit": electrical power supply cable without plug + connector, factory-assembled (3~ version). Ref. : 4051820

ACCESSORIES

Single phase and three-phase motors

- Cord (not supplied by Salmson).
- Non-return ball valve **Ref. : PRC-4004712.**
- Shut-off valves **Ref. : 4015489**
- Linking pipe for two-pump installation (not supplied by Salmson).
- Bracket kit for float-switch cables **Ref. : 4013188**
- Alarmson overflow or low water audible alarm control box for clean water and muddy water, **Ref. : 2529590.**

OPERATING RANGES

Flow rates of up to:	**62 m³/h**
Manometric heads:	**22 m CL**
Liquid temperature range:	**+3° to 35°C***
Liquid density:	**1,05 max**
Liquid pH:	**6-11**
Max. submergence depth:	**10 m**
Max. particle size:	**Ø 44 mm**
ND of delivery port:	**50 and 65****

*+ 60°C for 5 minutes
**SVO-SCA 205 and 206 respectively

SVO-SCA 205-206

SUBMERSIBLE PUMPS
For muddy water
2-pole - 50 Hz series
2 ranges: 304 STAINLESS STEEL & 316L STAINLESS STEEL

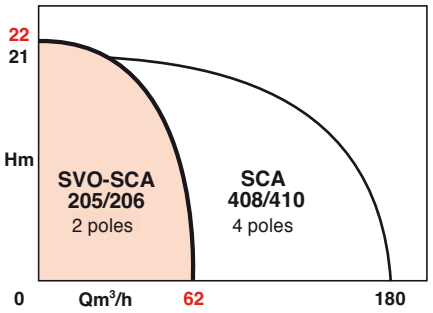

APPLICATIONS

Lift pumping of muddy water in the single and multiple-family housing and industrial sectors:
- wastewater and drainage water
- sanitary wastewater
- sewage
- emptying of septic tanks, etc.

RANGES:
- **304 Stainless steel range:**
  - non-corrosive liquids.
- **316L Stainless steel range:**
  - corrosive liquids (condensates, seawater, brackish water, demineralised water, etc.).

BENEFITS

- **Explosion-proof motor (206-3~ only): eliminating any accidental risks in explosive environments.**
- **Operating safety: oil-filled intermediate chamber, ensuring complete protection from infiltrations of water into the motor.**
- **304 or 316L stainless steel and composite materials: greater corrosion-resistance, improved safety and reliability of the pump.**
- **Pumps equipped with Vortex or single-vane, free-flow impellers which are virtually impossible to clog.**
- **Protective ring on the mechanical seal.**



- SVO-SCA 205
- SVO-SCA-206

- SVO - SCA single-phase motor with capacitor box



- VORTEX (SVO) impellers



- SINGLE-VANE impellers (SCA)



SVO-SCA 205-206

DESIGN

• Hydraulic part - ATEX (94/9/EC)*

- Centrifugal, single-stage.
- Axial intake under the housing; horizontal flanged discharge.
- Double sealing of shaft opening by a mechanical seal (on pumped liquid side) and by a lip seal (on motor side).
- Intermediate oil chamber between the hydraulic part and the motor.
- Two versions according to the impeller model:
- SVO: with Vortex impeller for sanitary wastewater, liquids containing solid and fibrous particles, sludge and gases.
- SCA: with single-vane impeller for effluent containing solid particles.

• Motor - ATEX (94/9/CE)*

- Submersible, direct starting.
- EEx d IIB T4-certified explosion-proof protection.
- Shaft guide bearings lubricated for life.
- 10 m long HO 7RN-F-type power cable with 4 conductors on the exposed end.
- Single-phase motor with integrated thermal protection and automatic reset, integral capacitor in the terminal box supplied with the pump.

Rotation speed:	2900 rpm
Three-phase winding	400 V (T4)
Single-phase	230 V (M)
Frequencies:	50 Hz (option 60 Hz)
Insulation class:	155 (F)
Protection class:	IP 68 (to 10 m max.)

* ATEX : SVO 206-T4 and SCA 206-T4 (explosive atmosphere protection conforming to the 94/9/EC directive.

IDENTIFICATION

SVO or SCA 206-1.1 T4-X

- pump code
- with Vortex impeller
- single-vane impeller
- 2-poles motor
- discharge DN in cm
- power of P2 motor in kW
- T4 : 400 V three-phase
- M : 230 V single-phase
- if 316L stainless steel

HYDRAULIC PRE-SELECTION RANGES

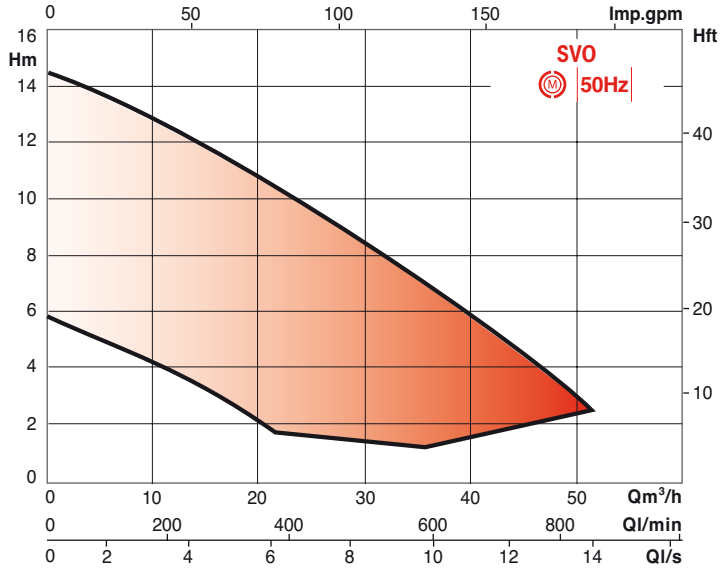

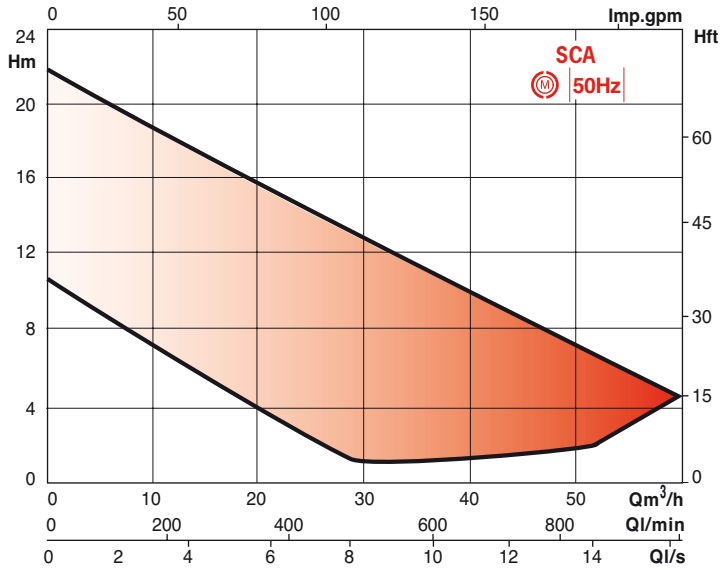

BASIC CONSTRUCTION

Main parts	Material	Material
	non-corrosive liquids	corrosive liquids
Suction cover 205	composite	composite
Suction cover 206	composite	composite
Impeller	composite	composite
Shaft 205	316 L stainless steel	316 L stainless steel
Shaft 206	steel (motor)/316 L stainless steel (c. pumped fluid)	
Housing	composite	composite
Motor casing	304 stainless steel	316 L stainless steel
Mechanical seal	Si carbide/Si carbide/Nitrile	Si carbide/Si carbide/Nitrile
Motor flange	304 stainless steel	316 L stainless steel
Fastenings	304 stainless steel	316 L stainless steel
Vapour relief valve 205	Nitrile	Nitrile

SVO-SCA 205-206

HYDRAULIC PERFORMANCE AT 2900 RPM

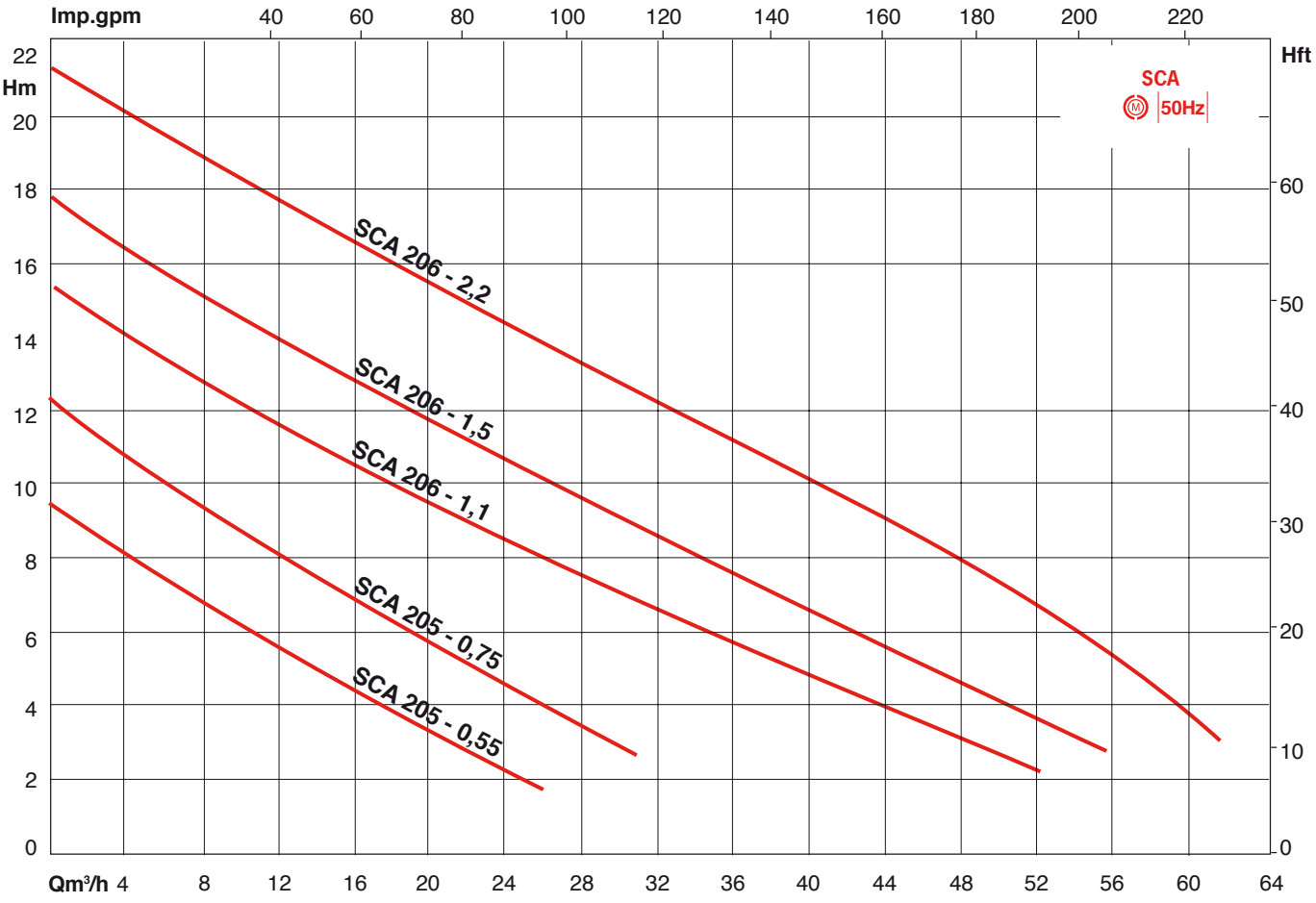

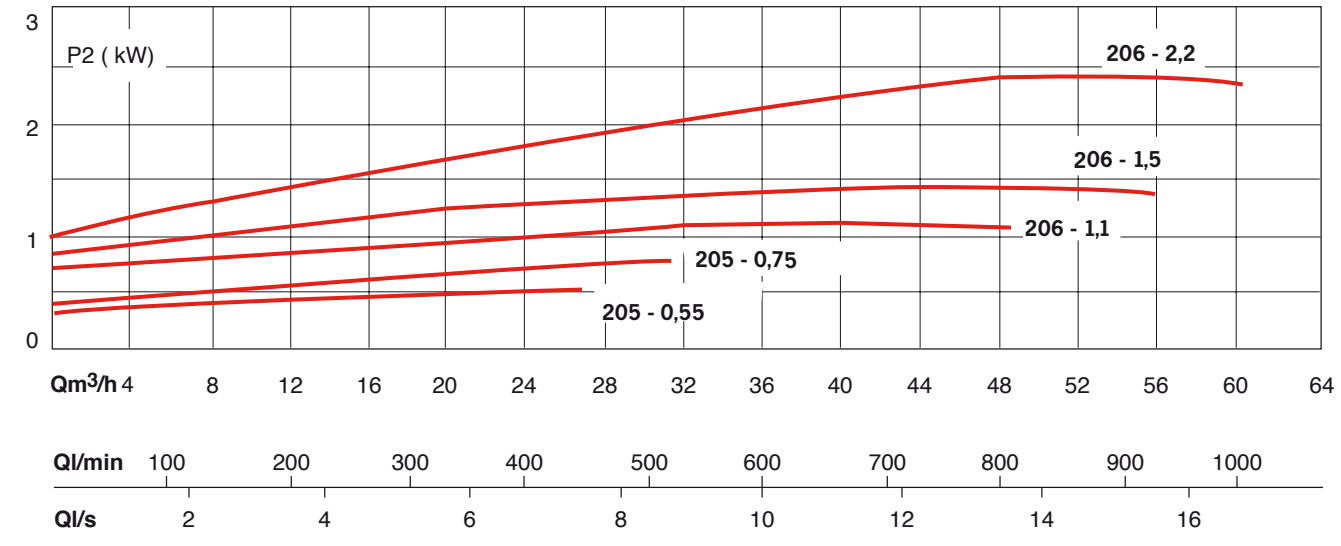

SVO-SCA 205-206

HYDRAULIC PERFORMANCE AT 2900 RPM

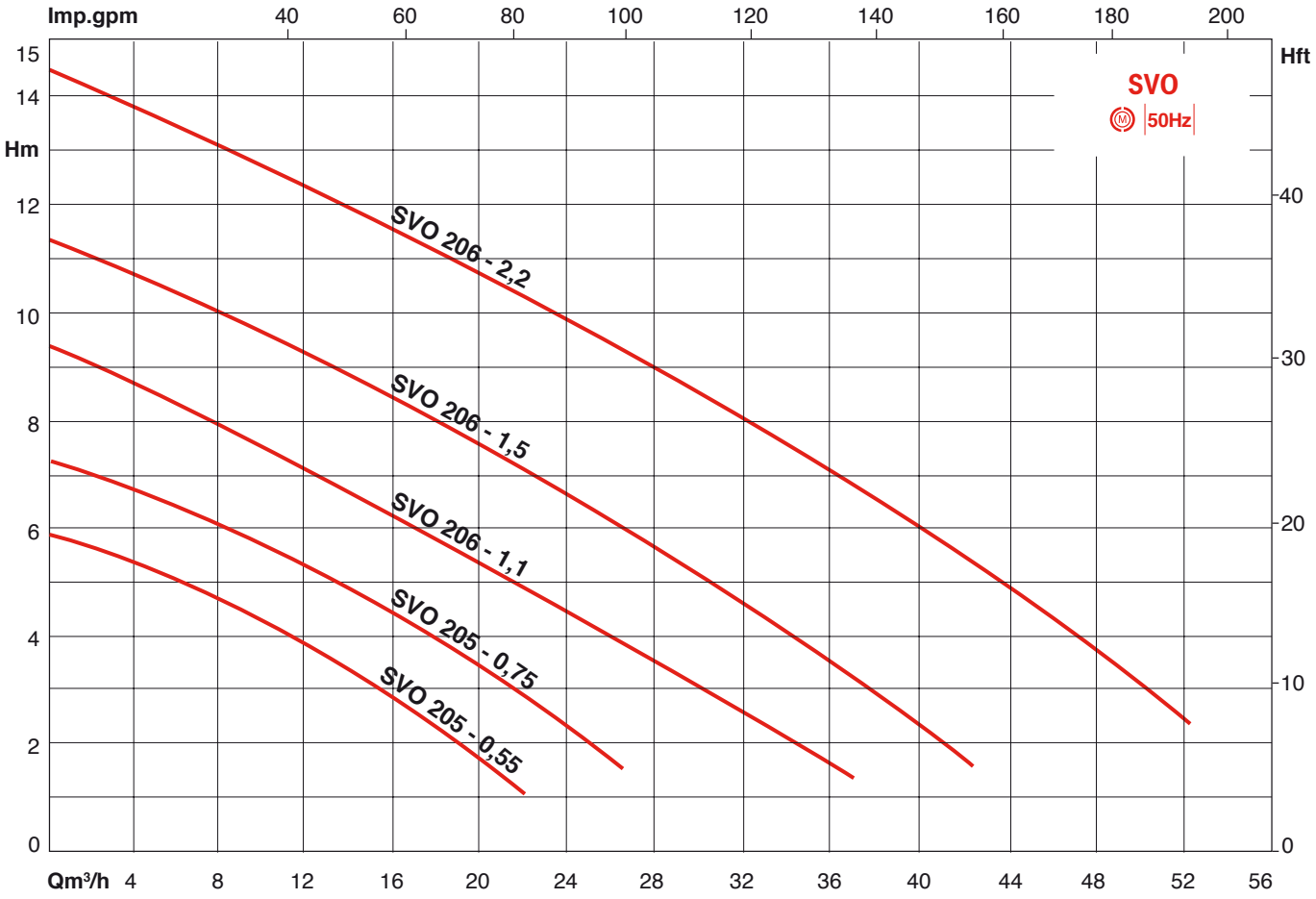

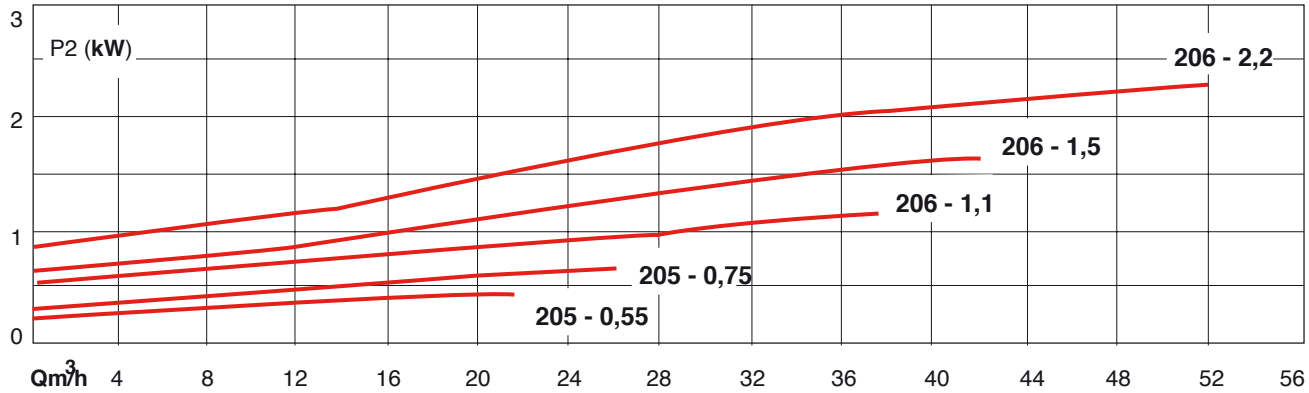

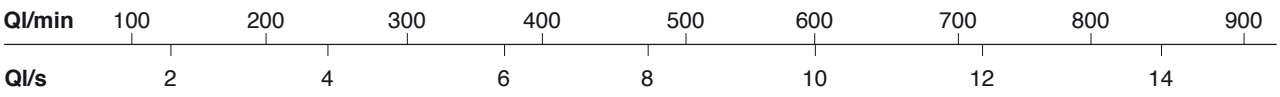

SECTIONAL DRAWING

• Assembly with Vortex impeller (DN 65)

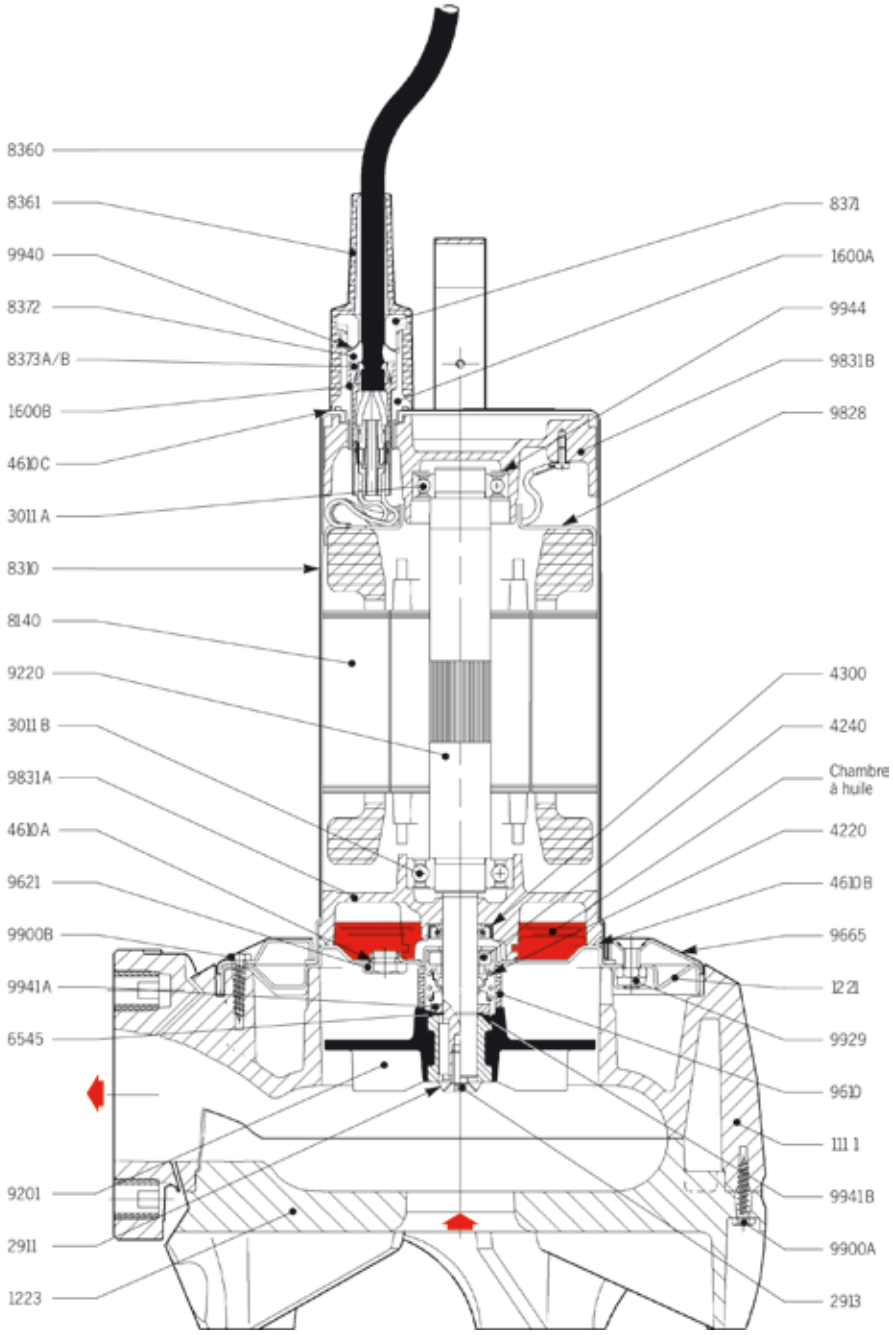

• Assembly with single-vane impeller

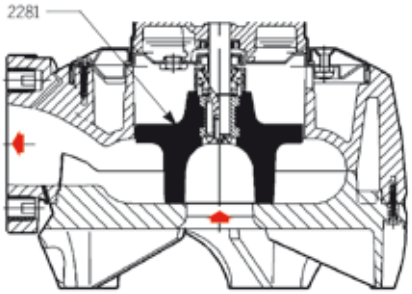

1111 - Pump housing
1221 - Motor shroud
1223 - Suction cover
1600A - Cable gland sleeve
1600B - Contact holder
• 2281 - Single-vane impeller
2911 - Finishing washer
2913 - Impeller attachment screw
• 3011A - Upper bearing
• 3011B - Lower bearing
• 4220 - Rotating part } seal
• 4240 - Fixed part } mechanical
• 4300 - Lip sealing ring
• 4610A - O-ring under plug 9621
• 4610B - Housing O-ring
• 4610C - O-ring for sleeve 8361
• 6545 - Impeller securing circlips
• 8140 - Stator
8310 - Ext. motor casing
• 8360 - Power cable: 10 m long
8361 - Cable sleeve
8371 - Cable gland nut
8372 - Cable gland seal
8373A - Cable thrust collar
8373B - Anchor ring
• 9201 - Vortex impeller
• 9220 - Rotor-shaft
• 9610 - Mechanical seal protector
9621 - Oil chamber plug
9665 - Motor flange
9828 - Stator cap
9831A - Lower bearing
9831B - Upper bearing
9900A - Suction cover fixing screw
9900B - Motor flange fixing screw
9929 - Nylstop nut under motor shroud
9940 - Cable gland washer
9941A - Mechanical seal thrust washer
9941B - Thrust washer
9944 - Spring washer

DN 50 pumps also feature a vapour relief valve.

• Recommended spare parts

SVO-SCA 205-206

SCHEMATIC INSTALLATION DIAGRAMS

• Fixed installation recommended*

* Pump with mounting base, complete lift-pumping system, switch and protection box with 3 level controllers.

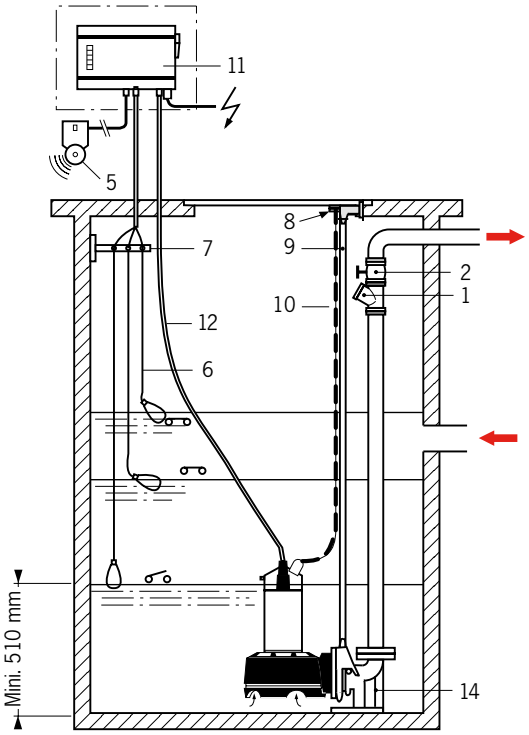

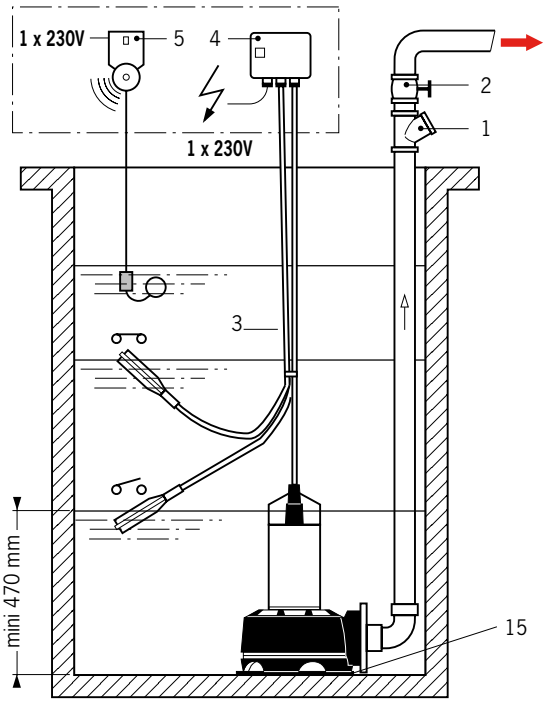

**Pump with single-phase motor on a base plate, with float switch, terminal box and audible overflow alarm.

• Fixed double installation***

*** Two pumps in parallel, linked by a pairing manifold, with mounting base, complete lift-pumping system, switch and protection box with 4 level controllers.

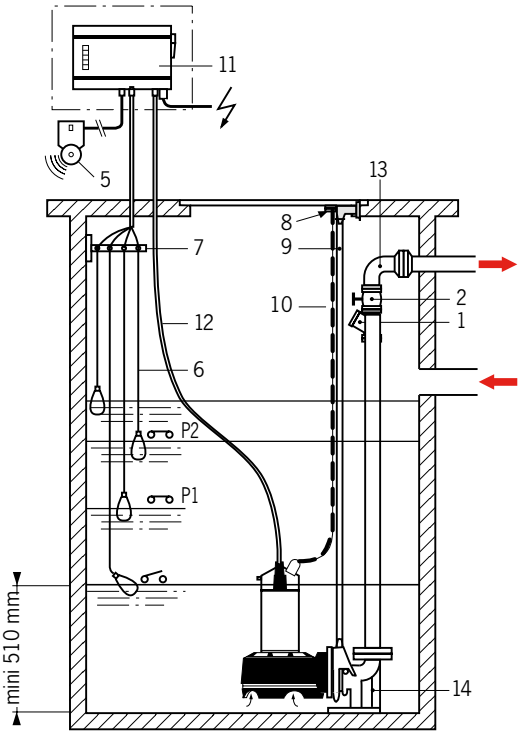

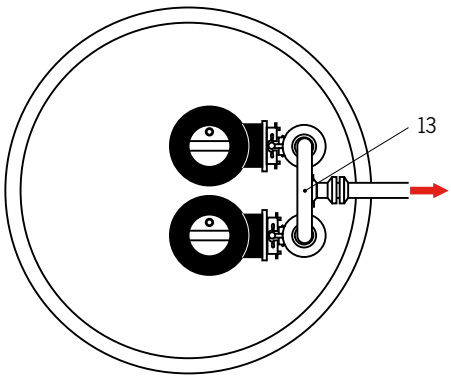

1 - Ball-type non-return valve.
2 - Shut-off valve.
3 - On-off pump float switch.
4 - Capacitor - connection box (single-phase motor).
5 - Audible overflow alarm.
6 - Level controllers or EAPS (electronic air pressure switches).
7 - Mounting bracket kit for float switches / cable attachment for EAPS.
8 - Upper guide bar bracket.
9 - Guide bar.
10 - Pump lifting chain.
11 - Switch and protection box.
12 - Motor power cable.
13 - Pairing manifold for two pumps.
14 - Mounting base.
15 - Base plate - increases the pump support area on a muddy bottom.

ELECTRICAL AND DIMENSIONAL SPECIFICATIONS

- **Mobile installation**

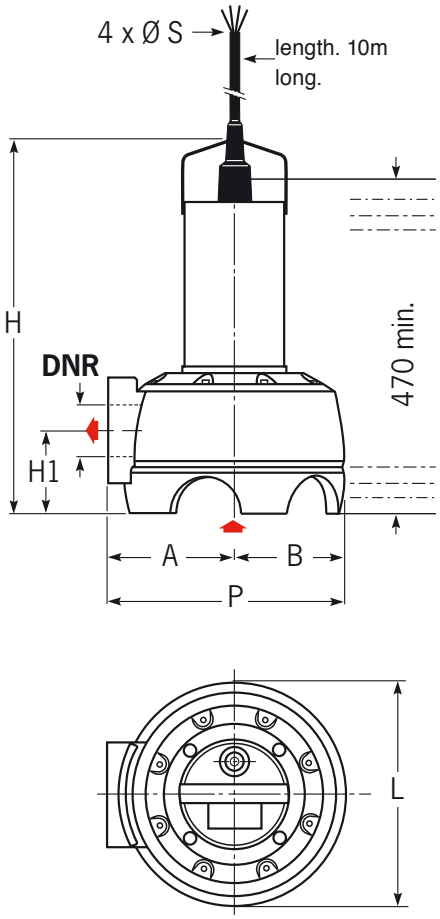

- **Single-phase version with terminal box**

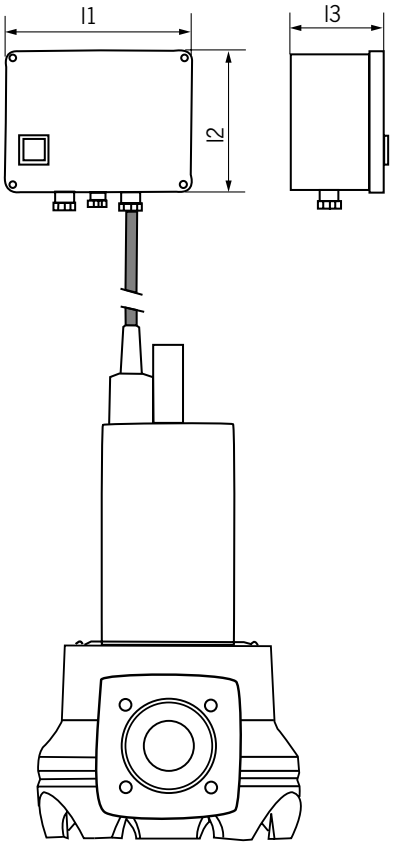

- **Fixed installation with lift-pumping system**

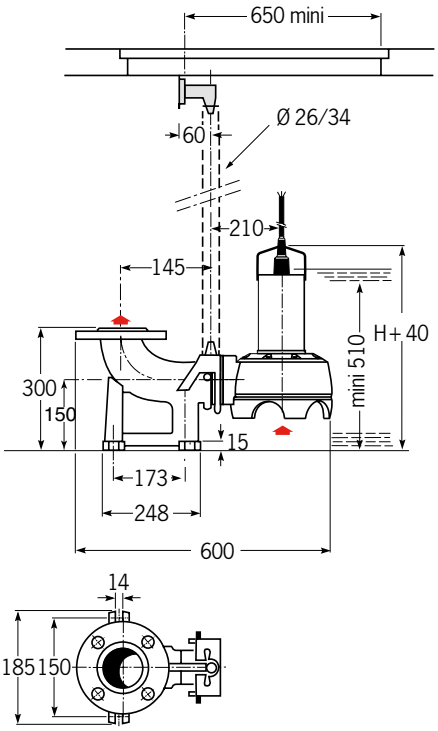

ORDER REFERENCE	MOTOR							PUMP									
	P2	I(A)	I(A)	I(A)	capac.	cable	ports	H	L	P	H1	A	B	l1	l2	l3	weight
	kW	1x 230V	3x 400V	3x 230V	µF	Ø S mm²	DNR	mm	mm	mm	mm	mm	mm	mm	mm	mm	kg
SVO 205-0,55 M	0,55	4,6	-----	-----	12	1	50	481	246	273	96	150	123	150	120	80	14
SVO 205-0,55 T4	0,55	-----	2	3,4	-----	1	50	481	246	273	96	150	123	-	-	-	13,5
SVO 205-0,75 M	0,75	5,84	-----	-----	16	1	50	481	246	273	96	150	123	150	120	80	15
SVO 205-0,75 T4	0,75	-----	2	3,4	-----	1	50	481	246	273	96	150	123	-	-	-	14,5
SCA 205-0,55 M	0,55	4,6	-----	-----	12	1	50	481	246	273	96	150	123	150	120	80	14
SCA 205-0,55 T4	0,55	-----	2	3,4	-----	1	50	481	246	273	96	150	123	-	-	-	13,5
SCA 205-0,75 M	0,75	5,84	-----	-----	16	1	50	481	246	273	96	150	123	150	120	80	15
SCA 205-0,75 T4	0,75	-----	2	3,4	-----	1	50	481	246	273	96	150	123	-	-	-	14,5
SVO 206-1,1 M	1,1	6,9	-----	-----	20	1	65	505	300	320	110	170	150	150	120	80	20
SVO 206-1,1 T4	1,1	-----	3,2	4,5	-----	1	65	505	300	320	110	170	150	-	-	-	21
SVO 206-1,5 M	1,5	9,5	-----	-----	30	1	65	535	300	320	110	170	150	200	150	80	21
SVO 206-1,5 T4	1,5	-----	3,6	6,1	-----	1,5	65	505	300	320	110	170	150	-	-	-	22
SVO 206-2,2 T4	2,2	-----	4,9	8,5	-----	1,5	65	535	300	320	110	170	150	-	-	-	23
SCA 206-1,1 M	1,1	6,9	-----	-----	20	1	65	505	300	320	110	170	150	150	120	80	20
SCA 206-1,1 T4	1,1	-----	3,2	4,5	-----	1	65	505	300	320	110	170	150	-	-	-	21
SCA 206-1,5 M	1,5	9,5	-----	-----	30	1	65	535	300	320	110	170	150	200	150	80	21
SCA 206-1,5 T4	1,5	-----	3,6	6,1	-----	1,5	65	505	300	320	110	170	150	-	-	-	22
SCA 206-2,2 T4	2,2	-----	4,9	8,5	-----	1,5	65	535	300	320	110	170	150	-	-	-	23

SVO-SCA 205-206

CONTROL SYSTEMS

Electronic switch and protection boxes

Model	YN 3000	YN 7000	MS Lift
			
Application	Management of sump levels via an EAPS sensor (not supplied)	Management of a submersible, lift or booster pump.	Management of levels in a fixed, sump or dry pit-type installation
Number of pumps			
1 pump	YN3100	YN7100	1x4kW
2 pumps	YN3200	-	2x4kW
Specifications			
1x230V	yes	yes	yes
3x230V	no	yes	no
3x400V	yes	yes	yes
Max. power per pump	4Kw	11Kw	4Kw
Current			
Single-phase	0,3 at 12A	1 at 23A	1,5 at 12A
Three-phase	0,3 at 10A	1 at 23A	1,5 at 12A
Frequency	50/60Hz	50/60Hz	50/60Hz
Protection class	IP65	IP54	IP54
Level detectors			
Float switch	yes	yes	yes
1 pump	3	1 or 2	2
2 pumps	4	no	3
EAPS sensor	yes	-	-
Level electrode	-	2 supplied	-

Level detectors		TYPE OF INSTALLATION			Cable length
		Deep well installation	**Portable installation**	**Fixed installation**	in metres
Regulation by level electrodes		Recommended	Incompatible	Possible	sold by the metre
Muddy water: Float switch Euroflot 430	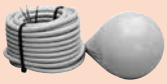	Incompatible	Possible	Possible	10 or 20
Regulation by EAPS piezometric sensor		Possible	Possible	Recommended	10 or 30

SVO-SCA 205-206

ACCESSORIES

- Base kits, DN 50 for SVO-SCA 205 and DN 65 for SVO-SCA 206, complete with 5 m long lifting chain and guide bar wall bracket.

• Mounting base kit

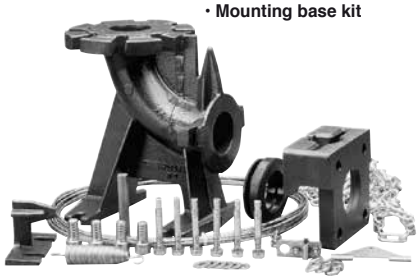

- Round, screw-on DN 2”- PN10 or DN 2”1/2-PN10 counter-flange.
- «A» extended stand for 206 pump: raises the pump from the bottom of the sump.

For an ATEX installation, use the ADF (Zener barrier) version of the EAPS box.



- Base plate - increases the pump support area on a muddy bottom.

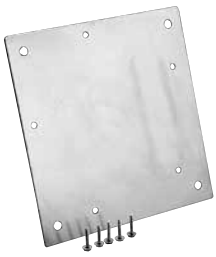

• Base plate kit

- Ball-type DN 2” and 2”1/2 special non-return valve for muddy water.
- Wall bracket for level controller cable run.
- Alarmson overflow or low water audible alarm control box for clean water and muddy water (ref. 2529590)

• ALARMSON



FEATURES

a) Electrical

- **“M”:** 230 V - 50 Hz single-phase, integral permanent capacitor in the box supplied with the pump.
- **“T4”:** 400 V - 50 Hz three-phase 400 V-50 Hz,

- Mandatory thermal overcurrent protection via a switch and circuit-breaker or via a switch and protection box.

b) Fitting

- Mobile or fixed installation with complete lift-pumping system.
- Connection to the system via a screw-on counter-flange (not supplied) for flexible hose or rigid pipe.

- **These pumps must be installed in flooded sumps.**

c) Packaging

- Pumps delivered in recyclable cardboard box packaging with a 10 m long, four-conductor power cable, without accessories.
- Single-phase model with permanent capacitor - box (0.55 and 0.75 kW single-phase, with float switch).

- The intermediate chamber is filled with oil:
- SINGLE and THREE-PHASE motors
  up to 0,75 kW : 115 ml.
- SINGLE-PHASE motors
  up to 1,1 kW : 150 ml.
  above: 190 ml.
- THREE-PHASE motors
  up to 1,5 kW : 150 ml.
  above: 190 ml.

d) Maintenance

- Replacement of recommended spare parts (•), or kits comprising several spare parts:
- Sealing kit,
- Can kit,
- Electric motor kit.

Please contact us.

SVO-SCA 205-206

NOTES

OPERATING RANGE

Flow rates up to:	**90 m³/h**
Mano. head:	**29 mCE**
Liquid temperature range:	**+3 to 40°C***
Max. immersion depth:	**20 m**
Free flow:	**50, 65 or 80 mm**
DN discharge opening :	**50, 65 or 80**

*Maximum 60°C for 3 minutes

ROCSAN LIX

SUBMERSIBLE PUMPS

Pumping of semi-collective and domestic muddy water 2 and 4 pole - 50 Hz

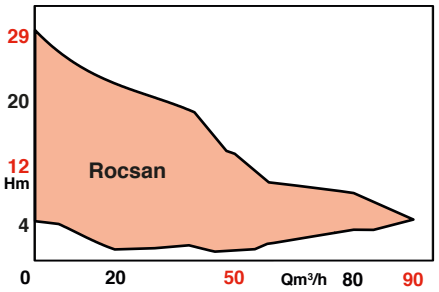

APPLICATIONS

Transportation of waste water containing solids and sewage to pumping stations.

Implementation adapted to intermittent operation in pumping stations.

ADVANTAGES

- **Optimum coverage of operating ranges for each DN.**
- **Operating safety thanks to integrated controls.**
- **Double independent mechanical seals for optimum security.**
- **Full flow vortex impeller.**



Support delivered separately

ROCSAN LIX

DESIGN

• Hydraulic part
- Submersible, vertical axis.
- Flanged connector.
- Shared pump/motor shaft.
- Axial suction under body.
- Vortex impeller.

• Imperviousness
- Double mechanical seals,
- Leak detection electrode connecting to intermediate oil chamber.

• Motor
- **General**: watertight with dry rotor
- **Protection**: integrated thermal probe PTO protecting the motor against overheating.
- **Start-up**:
  Single-phase version: integrated capacitor and overheating management with automatic restart.
  Three-phase version: direct start-up below 4 kW.
  The models equipped with floats (...-A) can be activated directly. A protection and switch box is required for the other versions.

- **Motor features**:

Rotation speed:	1450 or 2900 rpm
Network supply:	1~230 V, 50 Hz or 3~400 V, 50 Hz
Insulation category:	F
Protection index:	IP 68

EC compliance
Cable: 10m length, motor end fitted with a connector for ease of maintenance.

BASIC CONSTRUCTION

Main parts	Material
Pump casing	EN-GJL-250
Motor sleeve	Stainless steel 304
Motor shaft	Stainless steel 420
Vortex impeller	EN-GJL-250
Fluid side mechanical seal	SiC/SiC
Motor side mechanical seal	Carbon/Ceramic

PRE-SELECTION GRAPH

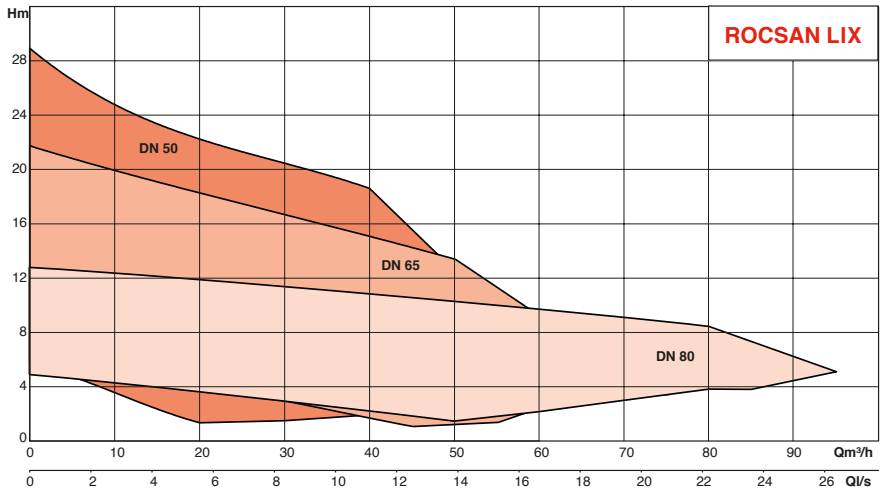

OPERATING PRINICPLE

S1 Continuous	Immersed	
S2 Occasional	Emerged	30 mins
S3 Intermittent	Emerged	25%

Starting frequency:
- recommended: 20 start-ups/h,
- maximum : 50 start-ups/h

IDENTIFICATION

Rocsan lix V05DA-122/E...-A

Group

Range

Impeller type: V= vortex impeller

Nominal connection diameter:
05 = DN 50
06 = DN 65
08 = DN 80

D = Open hydraulics suction side according to DIN

Hydraulic material design
A = standard execution

Hydraulics type

Motor type:
E = dry chamber motor

Additional electrical equipment:
O = With free cable end
P = With mains plug
A = With float switch and plug

HYDRAULIC PERFORMANCES - 2900 RPM

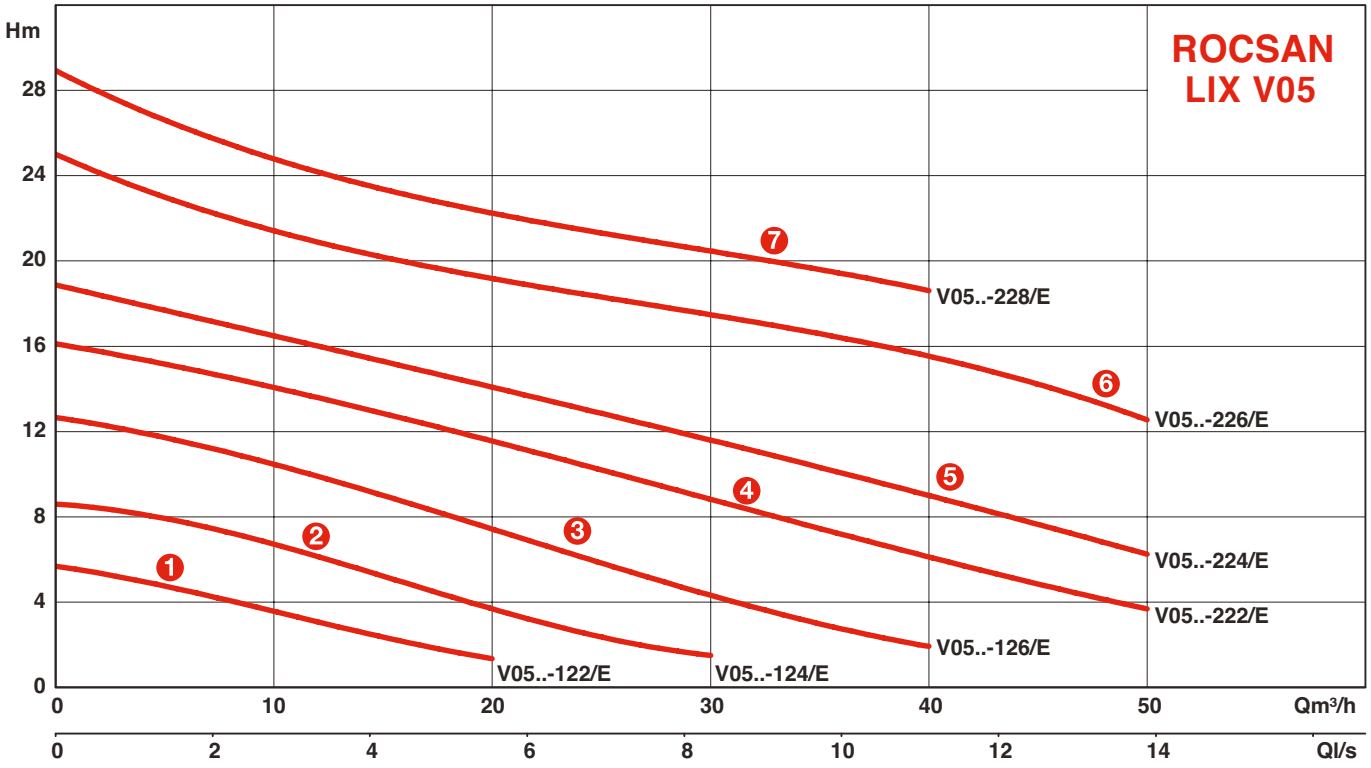

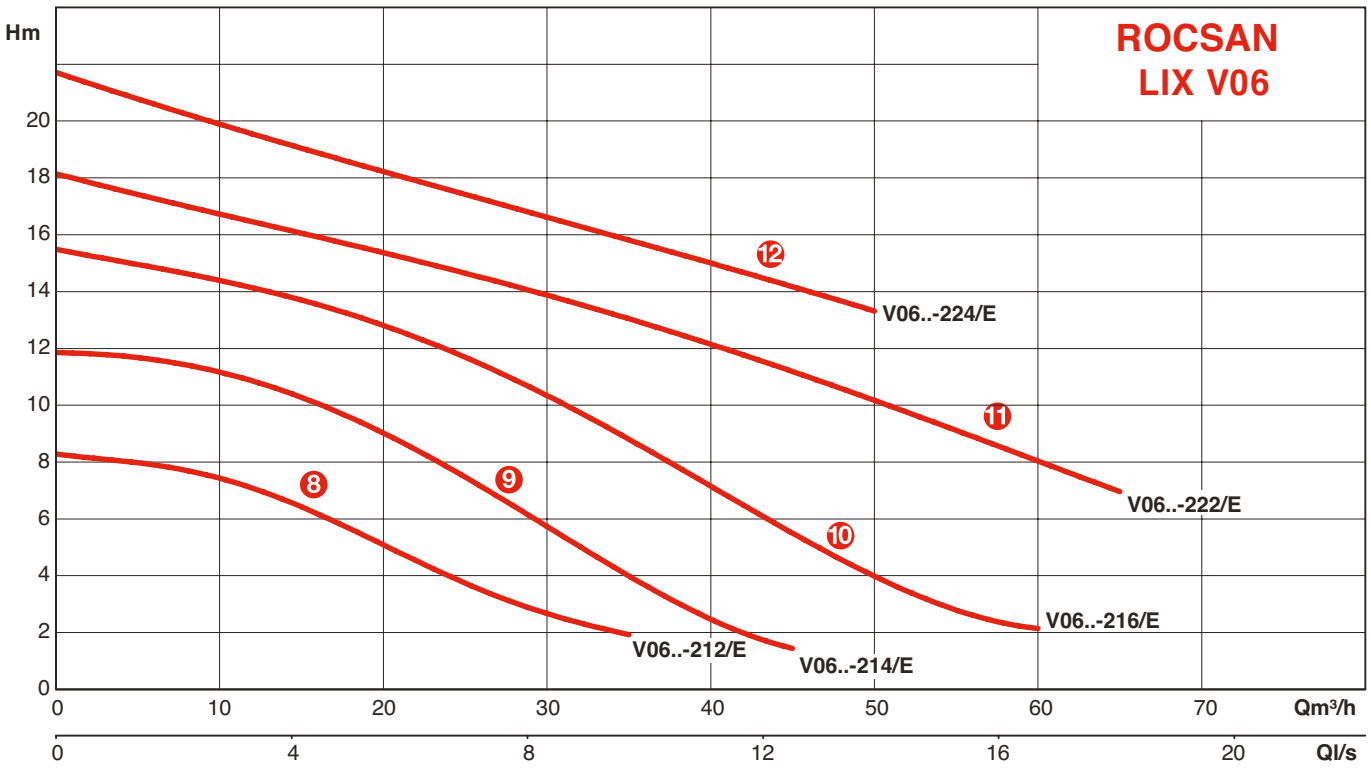

ROCSAN LIX

HYDRAULIC PERFORMANCES - 1450 RPM

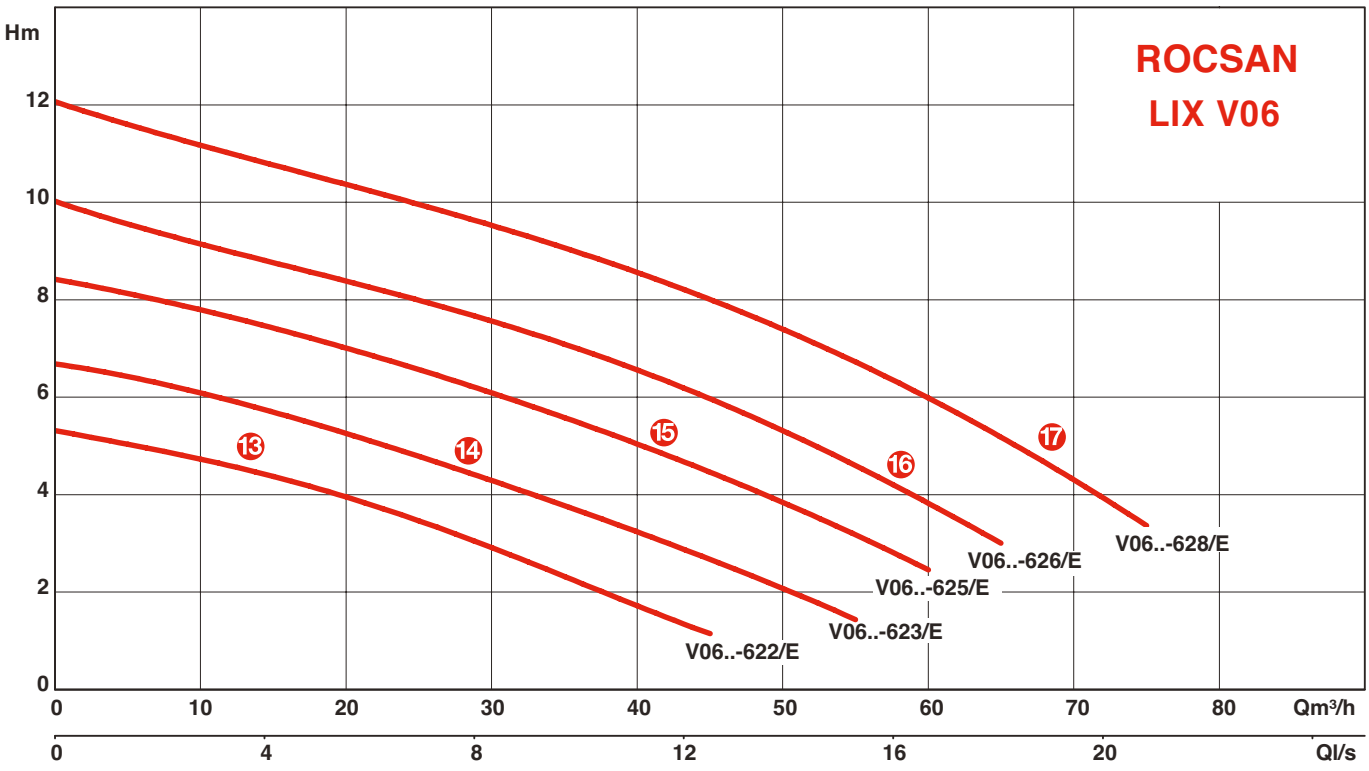

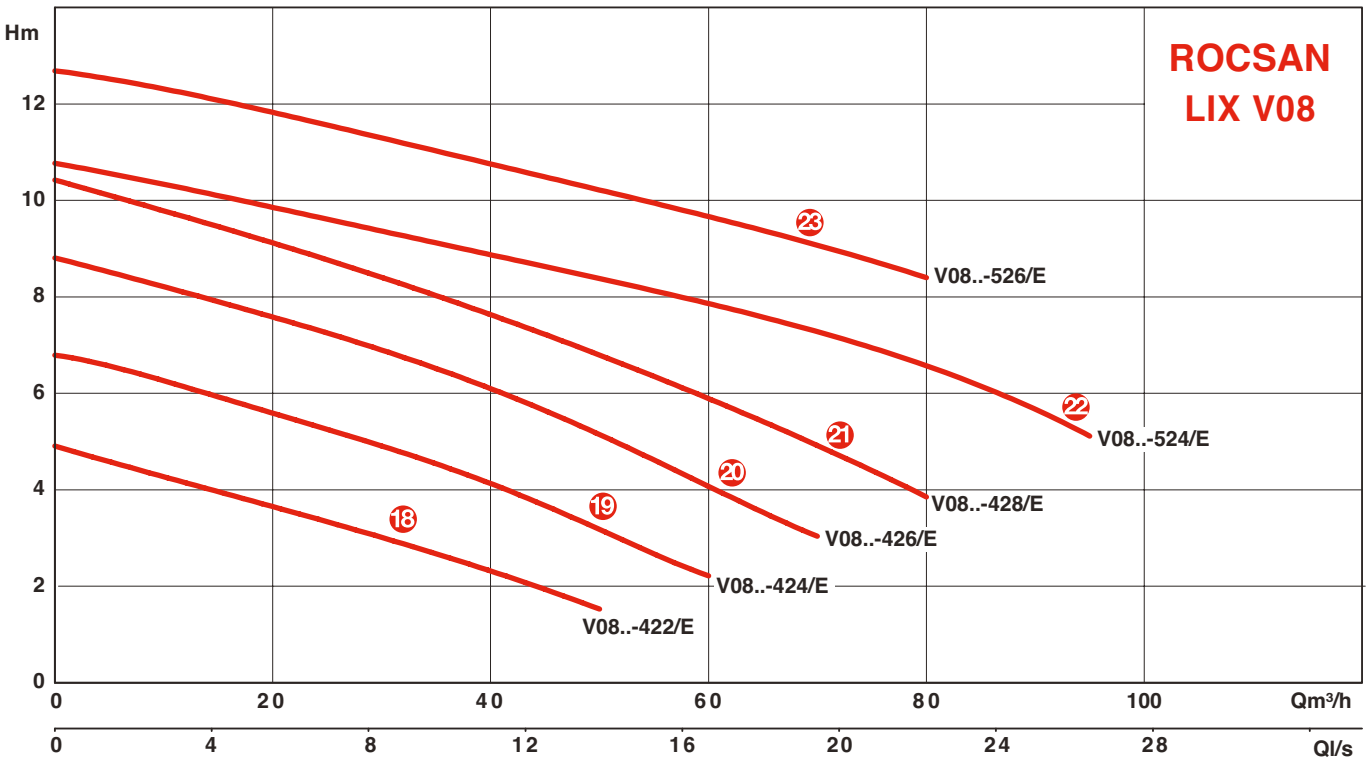

DIMENSIONS AND SPACE REQUIREMENT

Rocsan lix V05 Mobile system DN50

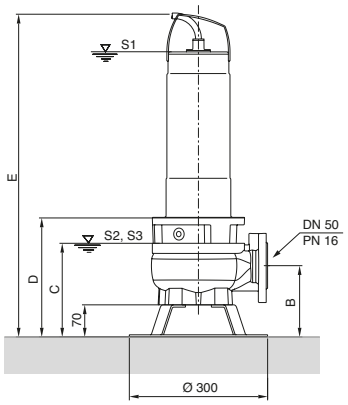

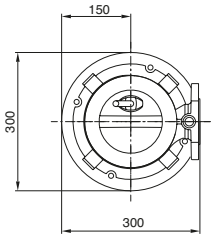

• Rocsan lix V05 Fixed system DN50

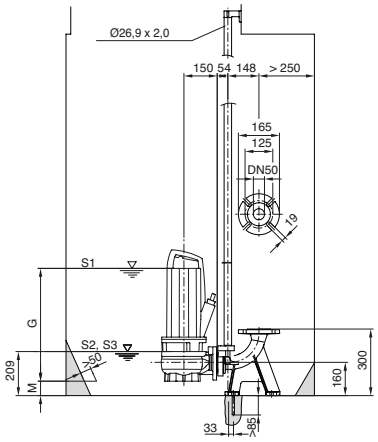

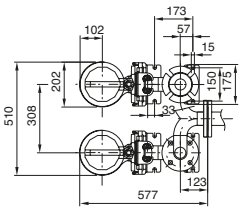

Reference	B	C	D	E	G	L	M
	mm	mm	mm	mm	mm	mm	mm
Rocsan lix V05DA-122/E	148	196	251	608	457	72	82
Rocsan lix V05DA-124/E	148	196	251	608	457	72	82
Rocsan lix V05DA-126/E	148	196	251	608	457	72	82
Rocsan lix V05DA-222/E	155	203	258	700	549	65	75
Rocsan lix V05DA-224/E	155	203	258	700	549	65	75
Rocsan lix V05DA-226/E	155	203	258	700	549	65	75
Rocsan lix V05DA-228/E	155	203	258	700	549	65	75

TECHNICAL DATA

Reference	Curve	Operation		P2	P1	In	Speed	Network voltage	IP	Cable	Mass	Grading	Start-up
		Out of water	immersed	kW	kW	A	rpm			m	kg	mm	
Rocsan lix V05DA-122/EAD0-2-M0011-523-P	1	S2-15 min S3-25%	S1	1,1	1,7	7,4	2900	1 ~ 230V, 50Hz	68	10	39,7	50	Direct
Rocsan lix V05DA-122/EAD0-2-M0011-523-A	1	S2-15 min S3-25%	S1	1,1	1,7	7,4	2900	1 ~ 230V, 50Hz	68	10	39,9	50	Direct
Rocsan lix V05DA-122/EAD1-2-T0011-540-O	1	S2-15 min S3-25%	S1	1,1	1,4	2,7	2900	3 ~ 400V, 50Hz	68	10	40,6	50	Direct
Rocsan lix V05DA-122/EAD1-2-T0011-540-A	1	S2-15 min S3-25%	S1	1,1	1,4	2,7	2900	3 ~ 400V, 50Hz	68	10	40,6	50	Direct
Rocsan lix V05DA-124/EAD0-2-M0011-523-P	2	S2-15 min S3-25%	S1	1,1	1,7	7,4	2900	1 ~ 230V, 50Hz	68	10	39,8	50	Direct
Rocsan lix V05DA-124/EAD0-2-M0011-523-A	2	S2-15 min S3-25%	S1	1,1	1,7	7,4	2900	1 ~ 230V, 50Hz	68	10	40	50	Direct
Rocsan lix V05DA-124/EAD1-2-T0011-540-O	2	S2-15 min S3-25%	S1	1,1	1,4	2,7	2900	3 ~ 400V, 50Hz	68	10	40,7	50	Direct
Rocsan lix V05DA-124/EAD1-2-T0011-540-A	2	S2-15 min S3-25%	S1	1,1	1,4	2,7	2900	3 ~ 400V, 50Hz	68	10	40,7	50	Direct
Rocsan lix V05DA-126/EAD0-2-M0015-523-P	3	S2-15 min S3-25%	S1	1,5	2	8,8	2900	1 ~ 230V, 50Hz	68	10	39,8	50	Direct
Rocsan lix V05DA-126/EAD0-2-M0015-523-A	3	S2-15 min S3-25%	S1	1,5	2	8,8	2900	1 ~ 230V, 50Hz	68	10	40	50	Direct
Rocsan lix V05DA-126/EAD1-2-T0015-540-O	3	S2-15 min S3-25%	S1	1,5	1,9	3,4	2900	3 ~ 400V, 50Hz	68	10	40,7	50	Direct

ROCSAN LIX

TECHNICAL DATA

Reference	Curve	Operation		P2	P1	In	Speed	Network voltage	IP	Cable	Mass	Grading	Start-up
		Out of water	immersed	kW	kW	A	rpm			m	kg	mm	
Rocsan lix V05DA-126/EAD1-2-T0015-540-A	3	S2-15 min S3-25%	S1	1,5	1,9	3,4	2900	3 ~ 400V, 50Hz	68	10	40,7	50	Direct
Rocsan lix V05DA-222/EAD1-2-T0025-540-O	4	S2-15 min S3-25%	S1	2,5	3,2	5,3	2900	3 ~ 400V, 50Hz	68	10	43,1	50	Direct
Rocsan lix V05DA-222/EAD1-2-T0025-540-A	4	S2-15 min S3-25%	S1	2,5	3,2	5,3	2900	3 ~ 400V, 50Hz	68	10	43,1	50	Direct
Rocsan lix V05DA-224/EAD1-2-T0025-540-O	5	S2-15 min S3-25%	S1	2,5	3,2	5,3	2900	3 ~ 400V, 50Hz	68	10	43,1	50	Direct
Rocsan lix V05DA-224/EAD1-2-T0025-540-A	5	S2-15 min S3-25%	S1	2,5	3,2	5,3	2900	3 ~ 400V, 50Hz	68	10	43,1	50	Direct
Rocsan lix V05DA-226/EAD1-2-T0039-540-O	6	S2-15 min S3-25%	S1	3,9	4,7	7,7	2900	3 ~ 400V, 50Hz	68	10	48,2	50	Direct
Rocsan lix V05DA-226/EAD1-2-T0039-540-A	6	S2-15 min S3-25%	S1	3,9	4,7	7,7	2900	3 ~ 400V, 50Hz	68	10	48,2	50	Direct
Rocsan lix V05DA-228/EAD1-2-T0039-540-O	7	S2-15 min S3-25%	S1	3,9	4,7	7,7	2900	3 ~ 400V, 50Hz	68	10	48,2	50	Direct
Rocsan lix V05DA-228/EAD1-2-T0039-540-A	7	S2-15 min S3-25%	S1	3,9	4,7	7,7	2900	3 ~ 400V, 50Hz	68	10	48,2	50	Direct

DIMENSIONS AND SPACE REQUIREMENT

• Rocsan lix V06 mobile system DN65 or DN 80

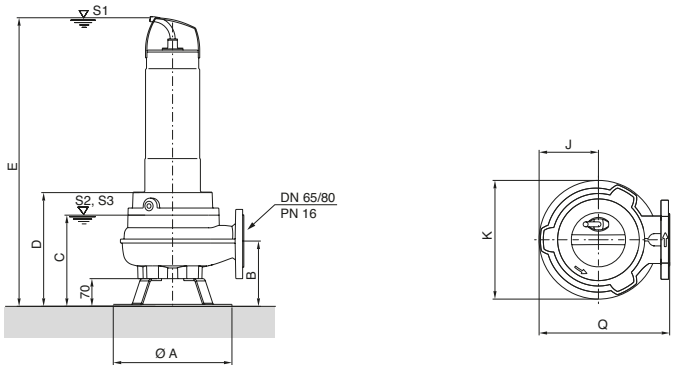

• Rocsan lix V06 Fixed system DN65

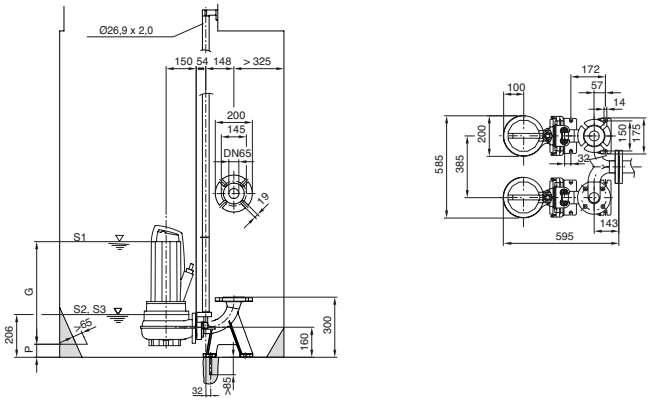

Rocsan lix V06 Fixed system DN80

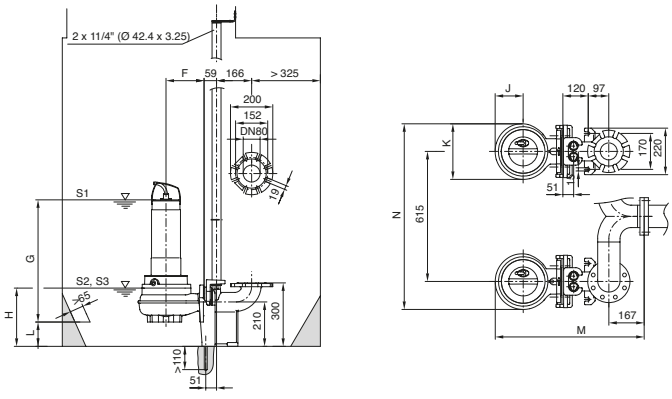

The outlet flange of the Rocsan lix V06 allows for the assembly of either DN65 or DN80 accessories

DIMENSIONS AND SPACE REQUIREMENT

Reference	B	C	D	E	F	G	H	J	K	L	M	N	P	Q
	mm	mm	mm	mm	mm	mm	mm	mm	mm	mm	mm	mm	mm	mm
Rocsan lix V06DA-212/E	155	211	266	623	150	471	256	100	200	125	642	815	75	250
Rocsan lix V06DA-214/E	155	211	266	623	150	471	256	100	200	125	642	815	75	250
Rocsan lix V06DA-216/E	155	211	266	708	150	556	256	100	200	125	642	815	75	250
Rocsan lix V06DA-222/E	155	211	266	708	150	556	256	100	200	125	642	815	75	250
Rocsan lix V06DA-224/E	155	211	266	708	150	556	256	100	200	125	642	815	75	250
Rocsan lix V06DA-622/E	165	230	287	729	180	578	275	147	263	115	719	878	62	327
Rocsan lix V06DA-623/E	165	230	287	729	180	578	275	147	263	115	719	878	62	327
Rocsan lix V06DA-625/E	165	230	287	729	180	578	275	147	263	115	719	878	62	327
Rocsan lix V06DA-626/E	165	230	287	729	180	578	275	147	263	115	719	878	62	327
Rocsan lix V06DA-628/E	165	230	287	729	180	578	275	147	263	115	719	878	62	327

TECHNICAL DATA

Reference	Curve	Operation		P2	P1	In	Speed	Network voltage	IP	Cable	Mass	Grading	Start-up
		Out of water	immersed	kW	kW	A	rpm			m	kg	mm	
Rocsan lix V06DA-212/EAD0-2-M0011-523-P	8	S2-15 min S3-25%	S1	1,1	1,7	7,4	2900	1 ~ 230V, 50Hz	68	10	41,5	65	direct
Rocsan lix V06DA-212/EAD0-2-M0011-523-A	8	S2-15 min S3-25%	S1	1,1	1,7	7,4	2900	1 ~ 230V, 50Hz	68	10	40,8	65	direct
Rocsan lix V06DA-212/EAD1-2-T0011-540-O	8	S2-15 min S3-25%	S1	1,1	1,4	2,7	2900	3 ~ 400V, 50Hz	68	10	41,5	65	direct
Rocsan lix V06DA-212/EAD1-2-T0011-540-A	8	S2-15 min S3-25%	S1	1,1	1,4	2,7	2900	3 ~ 400V, 50Hz	68	10	40,6	65	direct
Rocsan lix V06DA-214/EAD0-2-M0015-523-P	9	S2-15 min S3-25%	S1	1,5	2,0	8,8	2900	1 ~ 230V, 50Hz	68	10	41,6	65	direct
Rocsan lix V06DA-214/EAD0-2-M0015-523-A	9	S2-15 min S3-25%	S1	1,5	2,0	8,8	2900	1 ~ 230V, 50Hz	68	10	40,9	65	direct
Rocsan lix V06DA-214/EAD1-2-T0015-540-O	9	S2-15 min S3-25%	S1	1,5	1,9	3,4	2900	3 ~ 400V, 50Hz	68	10	41,6	65	direct
Rocsan lix V06DA-214/EAD1-2-T0015-540-A	9	S2-15 min S3-25%	S1	1,5	1,9	3,4	2900	3 ~ 400V, 50Hz	68	10	40,7	65	direct
Rocsan lix V06DA-216/EAD1-2-T0025-540-O	10	S2-15 min S3-25%	S1	2,5	3,2	5,3	2900	3 ~ 400V, 50Hz	68	10	42,7	65	direct
Rocsan lix V06DA-216/EAD1-2-T0025-540-A	10	S2-15 min S3-25%	S1	2,5	3,2	5,3	2900	3 ~ 400V, 50Hz	68	10	42,7	65	direct
Rocsan lix V06DA-222/EAD1-2-T0039-540-O	11	S2-15 min S3-25%	S1	3,9	4,7	7,7	2900	3 ~ 400V, 50Hz	68	10	47,5	65	direct
Rocsan lix V06DA-222/EAD1-2-T0039-540-A	11	S2-15 min S3-25%	S1	3,9	4,7	7,7	2900	3 ~ 400V, 50Hz	68	10	47,5	65	direct
Rocsan lix V06DA-224/EAD1-2-T0039-540-O	12	S2-15 min S3-25%	S1	3,9	4,7	7,7	2900	3 ~ 400V, 50Hz	68	10	47,5	65	direct
Rocsan lix V06DA-224/EAD1-2-T0039-540-A	12	S2-15 min S3-25%	S1	3,9	4,7	7,7	2900	3 ~ 400V, 50Hz	68	10	47,5	65	direct
Rocsan lix V06DA-622/EAD0-4-M0011-523-P	13	S2-15 min S3-25%	S1	1,1	1,5	7,7	1450	1 ~ 230V, 50Hz	68	10	53,2	65	direct
Rocsan lix V06DA-622/EAD1-4-T0011-540-O	13	S2-15 min S3-25%	S1	1,1	1,5	3,4	1450	3 ~ 400V, 50Hz	68	10	53,1	65	direct
Rocsan lix V06DA-623/EAD0-4-M0015-523-P	14	S2-15 min S3-25%	S1	1,5	2,2	9,4	1450	1 ~ 230V, 50Hz	68	10	53,2	65	direct
Rocsan lix V06DA-623/EAD1-4-T0015-540-O	14	S2-15 min S3-25%	S1	1,5	2,1	3,9	1450	3 ~ 400V, 50Hz	68	10	53,1	65	direct
Rocsan lix V06DA-625/EAD0-4-M0015-523-P	15	S2-15 min S3-25%	S1	1,5	2,2	9,4	1450	1 ~ 230V, 50Hz	68	10	53,4	65	direct
Rocsan lix V06DA-625/EAD1-4-T0015-540-O	15	S2-15 min S3-25%	S1	1,5	2,1	3,9	1450	3 ~ 400V, 50Hz	68	10	53,3	65	direct
Rocsan lix V06DA-626/EAD1-4-T0025-540-O	16	S2-15 min S3-25%	S1	2,5	3,3	6,0	1450	3 ~ 400V, 50Hz	68	10	55,4	65	direct
Rocsan lix V06DA-628/EAD1-4-T0025-540-O	17	S2-15 min S3-25%	S1	2,5	3,3	6,0	1450	1 ~ 230V, 50Hz	68	10	55,5	65	direct

ROCSAN LIX

DIMENSIONS AND SPACE REQUIREMENT

- **Rocsan lix V08 Mobile system DN80**

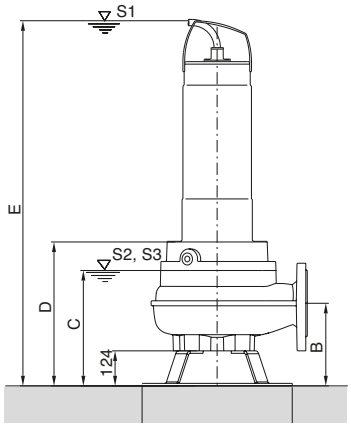

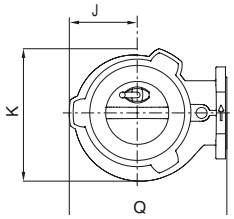

- **Rocsan lix V08 Fixed system DN80**

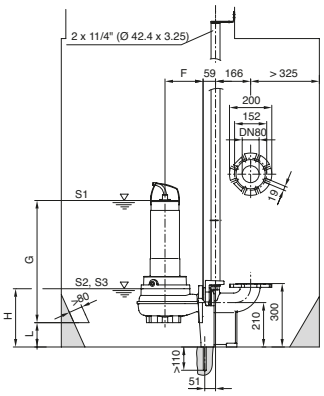

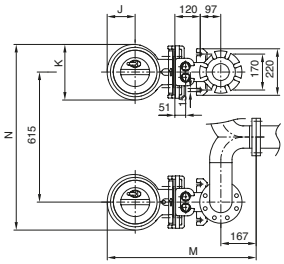

Reference	B	C	D	E	F	G	J	K	L	M	N	Q
	mm	mm	mm	mm	mm	mm	mm	mm	mm	mm	mm	mm
Rocsan lix V08DA-422/E	229	304	361	803	195	597	148	288	105	642	903	343
Rocsan lix V08DA-424/E	229	304	361	803	195	597	148	288	105	642	903	343
Rocsan lix V08DA-426/E	229	304	361	803	195	597	148	288	105	642	903	343
Rocsan lix V08DA-428/E	229	304	361	803	195	597	148	288	105	642	903	343
Rocsan lix V08DA-524/E	234	309	366	808	205	602	153	312	100	719	927	358
Rocsan lix V08DA-526/E	234	309	366	808	205	602	153	312	100	719	927	358

DONNEES TECHNIQUES

Reference	Curve	Operation		P2	P1	In	Speed	Network voltage	IP	Cable	Mass	Grading	Start-up
		Out of water	immersed	kW	kW	A	rpm			m	kg	mm	
Rocsan lix V08DA-422/EAD0-4-M0011-523-P	18	S2-15 min S3-25%		S1		1,1	1,5 7,7 1450	1 ~ 230V, 50Hz	68	10	60,3	80	Direct
Rocsan lix V08DA-422/EAD0-4-M0011-523-A	18	S2-15 min S3-25%		S1		1,1	1,5 7,7 1450	1 ~ 230V, 50Hz	68	10	60,3	80	Direct
Rocsan lix V08DA-422/EAD1-4-T0011-540-O	18	S2-15 min S3-25%		S1		1,1	1,5 3,4 1450	3 ~ 400V, 50Hz	68	10	60,3	80	Direct
Rocsan lix V08DA-422/EAD1-4-T0011-540-A	18	S2-15 min S3-25%		S1		1,1	1,5 3,4 1450	3 ~ 400V, 50Hz	68	10	60,3	80	Direct
Rocsan lix V08DA-424/EAD0-4-M0011-523-P	19	S2-15 min S3-25%		S1		1,1	1,5 7,7 1450	1 ~ 230V, 50Hz	68	10	60,5	80	Direct
Rocsan lix V08DA-424/EAD0-4-M0011-523-A	19	S2-15 min S3-25%		S1		1,1	1,5 7,7 1450	1 ~ 230V, 50Hz	68	10	60,5	80	Direct
Rocsan lix V08DA-424/EAD1-4-T0011-540-O	19	S2-15 min S3-25%		S1		1,1	1,5 3,4 1450	3 ~ 400V, 50Hz	68	10	60,5	80	Direct
Rocsan lix V08DA-424/EAD1-4-T0011-540-A	19	S2-15 min S3-25%		S1		1,1	1,5 3,4 1450	3 ~ 400V, 50Hz	68	10	60,5	80	Direct
Rocsan lix V08DA-426/EAD0-4-M0015-523-P	20	S2-15 min S3-25%		S1		1,5	2,2 9,4 1450	1 ~ 230V, 50Hz	68	10	60,6	80	Direct
Rocsan lix V08DA-426/EAD0-4-M0015-523-A	20	S2-15 min S3-25%		S1		1,5	2,2 9,4 1450	1 ~ 230V, 50Hz	68	10	60,6	80	Direct
Rocsan lix V08DA-426/EAD1-4-T0015-540-O	20	S2-15 min S3-25%		S1		1,5	2,1 3,9 1450	3 ~ 400V, 50Hz	68	10	60,6	80	Direct
Rocsan lix V08DA-426/EAD1-4-T0015-540-A	20	S2-15 min S3-25%		S1		1,5	2,1 3,9 1450	3 ~ 400V, 50Hz	68	10	60,6	80	Direct
Rocsan lix V08DA-428/EAD1-4-T0025-540-O	21	S2-15 min S3-25%		S1		2,5	3,3 6 1450	3 ~ 400V, 50Hz	68	10	60,7	80	Direct
Rocsan lix V08DA-524/EAD0-4-T0035-540-O	22	S2-15 min S3-25%		S1		3,5	4,5 8,3 1450	3 ~ 400V, 50Hz	68	10	67	80	Direct
Rocsan lix V08DA-526/EAD0-4-T0035-540-O	23	S2-15 min S3-25%		S1		3,5	4,5 8,3 1450	3 ~ 400V, 50Hz	68	10	67,1	80	Direct

RECOMMENDED ACCESSORIES FOR MOBILE SYSTEM

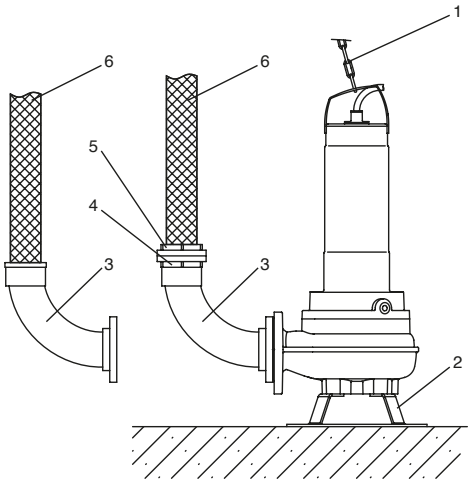

1) Pumping chain
2) Bracket
3) Elbow
4) and 5) Quick-fitting pipe unions
6) Flexible pipe

ACCESSORIES		Item reference
Bracket	Kit for DN50/65	6064667
	Kit for DN80	6022586
Elbow	Straight elbow DN50 PVC	4027343
	Straight elbow DN65 Cast iron	4027345
	Straight elbow DN80 Cast iron	6065692
Pipe (for use with ringed elbows)	10m Di63 pipe for elbow DN50	4027324
	10m Di70 pipe for elbow DN65	4027323
	20m Di75 pipe for elbow DN80	2014152
	30m Di75 pipe for elbow DN80	2014153
Stainless steel chain kit 316 (chain + 2 shackles)	Length 5m Links diameter 8mm for pump up to 400 kg	6063136
	Length 10m Links diameter 8mm for pump up to 400 kg	6063138

RECOMMENDED ACCESSORIES FOR FIXED SYSTEM

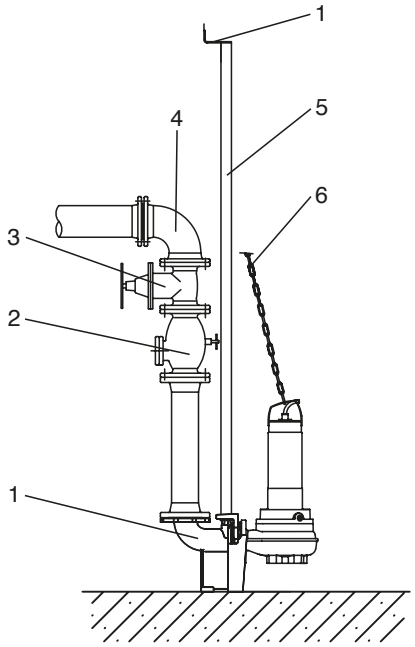

1) Support base
2) Non-return valve
3) Shut-off valve
4) Elbow
5) Guide bars
6) Pumping chain

ACCESSORIES		Item reference
Stop valves	Stop valve DN50	2017160
	Stop valve DN65	2014646
	Stop valve DN80	2017162
Non-return valve	Ball-type non-return valve DN50 PN 10	4015465
	Ball-type non-return valve DN65 PN 10	4015760
	Ball-type non-return valve DN80 PN 10/16	4015761
Float	Nivo 430X1-10M	4027319
	Nivo 430X1-20M	4027320
	Float support angle bracket kit	4013188
IPAE	IPAE with 10 m cable	2519921
	IPAE with 30m cable	2519922
	IPAE with 50m cable	2519923
	Cable holder for IPAE (5)	2519927
	IPAE case version ADF (Zener barrier)	2521216
Stainless steel chain kit 316 (chain + 2 shackles)	Length 5m Links diameter 8mm for pump up to 400 kg	6063136
	Length 10m Links diameter 8mm for pump up to 400 kg	6063138
Support base	For DN50	6064369
	For DN65	6066845
	For DN80	6022585
	(guide bars not included)	

ROCSAN LIX

CONTROL SYSTEMS

Modèle	YN 3000	MS Lift	SC Lift
			
Application	Level management in a sump with EAPS probe (not supplied).	Management of levels for fixed sump or dry pit system.	Management of levels for fixed sump or dry pit system.
Number of pumps			
1 pump	YN3100	1x4kW	1x...A
2 pumps	YN3200	2x4kW	2x...A
Features			
1x230V	yes	yes	on demand
3x230V	no	no	no
3x400V	yes	yes	yes
Max. power per pump	4Kw	4Kw	37Kw
Intensity			
Single phase	0,3 to 12A	1,5 to 12A	0,5 to 12A
Three phase	0,3 to 10A	1,5 to 12A	0,5 to 72A
Frequency	50/60Hz	50/60Hz	50Hz
Protection index	IP65	IP54	IP54
Level detectors			
Float switch	yes	yes	yes
1 pump	3	2	4
2 pumps	4	3	5
IPAE probe	yes	no	yes

Level detectors		SYSTEM TYPE			Cable length
		Deep well system	**Transportable system**	**Fixed system**	in metres
Clear water: Float switch Euroflot 423		Incompatible	**Advised**	Possible	10 or 20
Muddy water: Float switch Nivo 430		Incompatible	Possible	Possible	10 or 20
Regulation by piezometric probe EAPS		Possible	Possible	**Advised**	10 or 30

·Contact us for adjustment flanges for base frames.

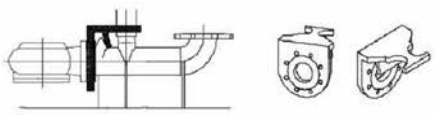

FEATURES

a) Electriques

- Single phase versions P or A : CE mains plug with earth (type C+E+F).
- Three phase version A : 16A plug 3P+N+T.
- Thermal protection against excess current must be provided by circuit-breaker switch or protection and switch box.

b) Assembly

- pump in vertical position for fixed or mobile system.
- **mobile system** : discharge opening connected by an elbow to flexible piping with a diameter greater than the discharge diameter of the pump.
- **double system:** the pumps may be joined together with a collector.
- Non-return valve and additional valves to be assembled preferably on upper part of discharge line.
- Connection by flexible or rigid piping.

c) Packaging

- Pump delivered on a pallet.
- Pump delivered with electric cable H07RN-F.
- Accessories packed separately.

SCA 408-410

SUBMERSIBLE PUMPS
SANITATION RANGE
4 pole - 50 Hz

OPERATING RANGE

Flow rates up to:	**180 m³/h**
Mano. head:	**21 m CL**
Liquid temperature range:	**+3 to 40°C***
Liquid density:	**1,05 max.**
Liquid pH:	**3-11**
Max. immersion depth:	**20 m**
Max. grading:	**Ø 80-95 mm**
DN discharge opening:	**80-100**

*+ 60°C for 5 minutes

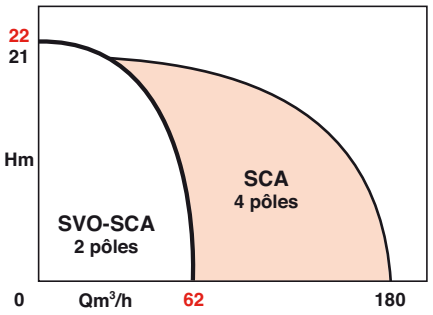

APPLICATIONS

Pumping of muddy water in collective, tertiary and industrial housing sectors:
- waste water and drainage water,
- sewage,
- sewer water,
- septic tank drainage,
- corrosive liquids: condensates, seawater, salty water, demineralised water, **contact us.**

ADVANTAGES

- **Flame-proof motor: eliminates all accidental risks in explosive environments.**
- **(Patented) detachable «flame-proof» cable.**
- **Operating safety: intermediate chamber with double mechanical seal filled with cooling liquid (glycol water) providing complete imperviousness against water infiltrations in the motor.**
- **Probe for detection of moisture in the motor.**
- **Cooling sleeve: anti-clogging turbulence system.**
- **316L stainless steel and composite material: anti-corrosion and anti-abrasive protection and increased pump reliability.**
- **Anti-clogging hydraulics thanks to spiral construction.**



• SCA410



• SINGLE CHANNEL impeller

SCA 408-410

DESIGN

• Hydraulic section - ATEX (94/9/EC)*

- Centrifugal, single stage.
- Axial suction under the body, horizontal flanged discharge.
- Double imperviousness to shaft flow thanks to mechanical seals on pumped liquid side and motor side.
- Cooling sleeve allowing for the evacuation of motor calories both in dry and submerged sumps.
- Impellers with counterblades for residual water containing solid and fibrous particles.

• Motor - ATEX (94/9/EC)*

- Submersible, direct activation or YΔ.
- Ipsothermal probe and moisture detectorté (PTO - 24 V max - 100 m A).
- **Approved flame-proof protection EEx d IIB T4.**
- 10m long electric cable, bare end with 7, 10 or 12 conductors.

Rotation speed: 1450 rpm
Standard 3 ~ winding: 400 V (T4)
Frequency : 50 Hz
Insulation category: 155 (F)
Protection index: IP 68 (20 m max.)

* ATEX : protection against explosive atmospheres consistent with directive 94/9/EC

BASIC CONSTRUCTION

Main parts	Material
Body	composite material
Impeller	composite material
Suction base	composite material
Motor housing	Stainless steel 316 L/ 1.4104
Motor end plate	Stainless steel 316 L/ 1.4104
Mechanical seal motor side	Graphite/Cr molybdenum/NBR
Mechanical seal impeller side	Car Si/Car Si/NBR
Motor flange	Stainless steel 316 L/ 1.4104
Fastenings	Stainless steel 316 L/ 1.4104

IDENTIFICATION

SCA 408-19/2,9 T4

- Pump code
- 4 pole motor
- Discharge DN in cm
- Impeller Ø in cm
- P2n motor power in kW
- Tree phase 400 V

HYDRAULIC PERFORMANCES - 1450 REV/MIN

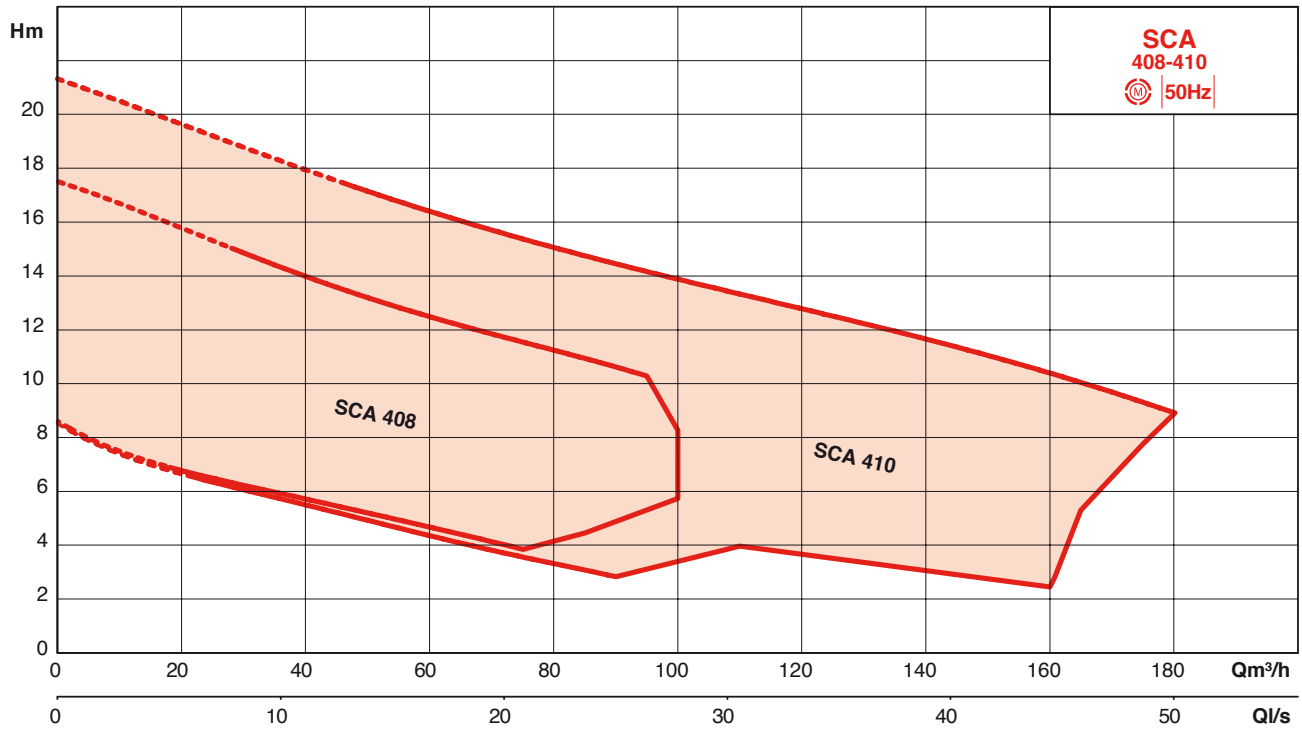

REPRESENTATIVE CROSS-SECTION SCA 410

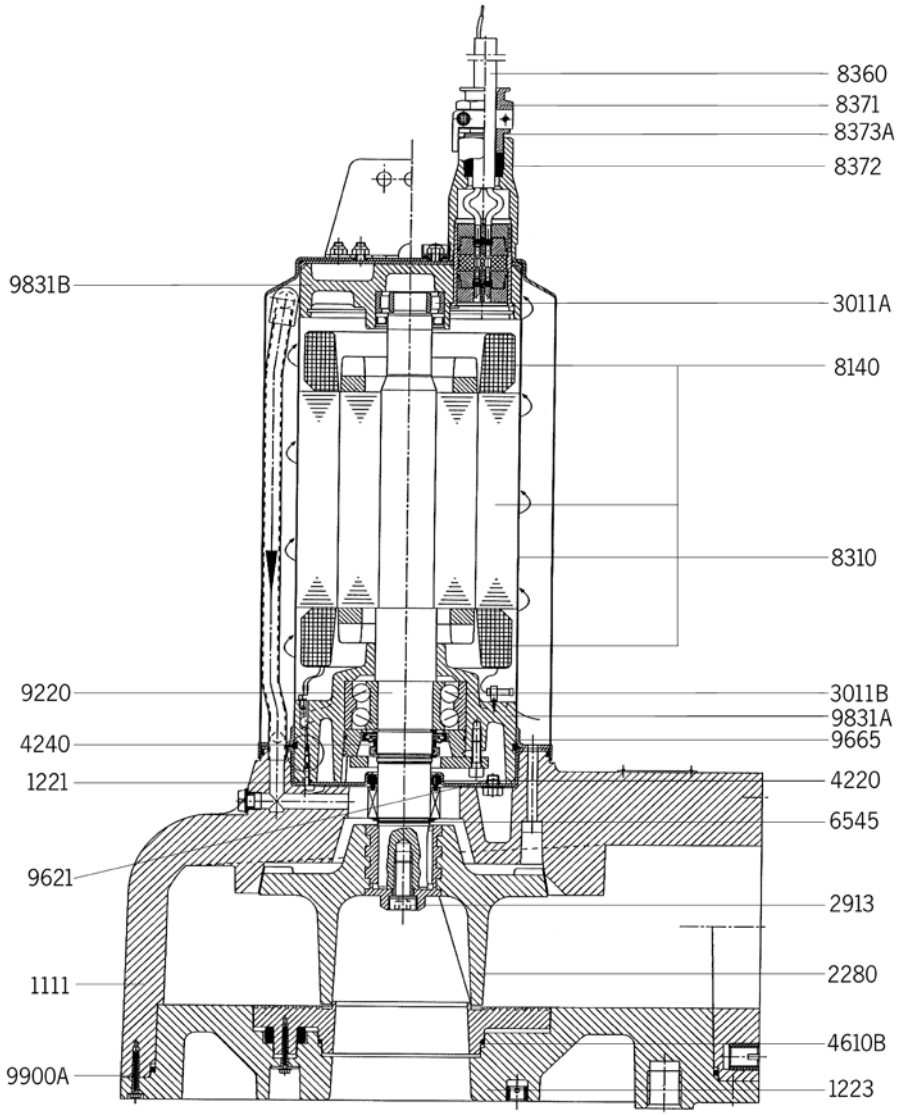

1111 - Pump body
1221 - Motor end plate
1223 - Suction base
• 2280 - Dual-channel impeller
• 2281 - Single-channel impeller
2913 - Impeller attachment screw
• 3011A - Upper bearing
• 3011B - Lower bearing
• 4220 - Lower section l seal
• 4240 - Upper section l mechanical
• 4610B - Body o-ring
• 6545 - Impeller support circlips
• 8140 - Stator
8310 - Ext. motor sleeve
• 8360 - Electric cable length 10 m
8371 - Cable screw nut
8372 - Cable screw joint
8373A - Cable thrust collar
• 9220 - Rotor shaft
9621 - Cooling chamber plug
9665 - Motor flange
9831A - Lower bearing
9831B - Upper bearing
9900A - Suction base attachment screw

• Recommended spare parts

NB : our repair service reconditions units in the factor (contact us).

SCA 408-410

HYDRAULIC PERFORMANCES

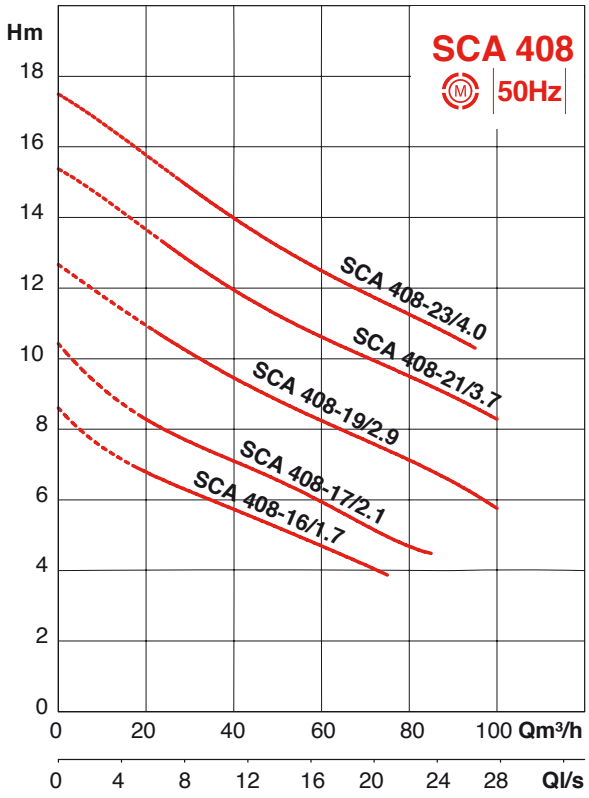

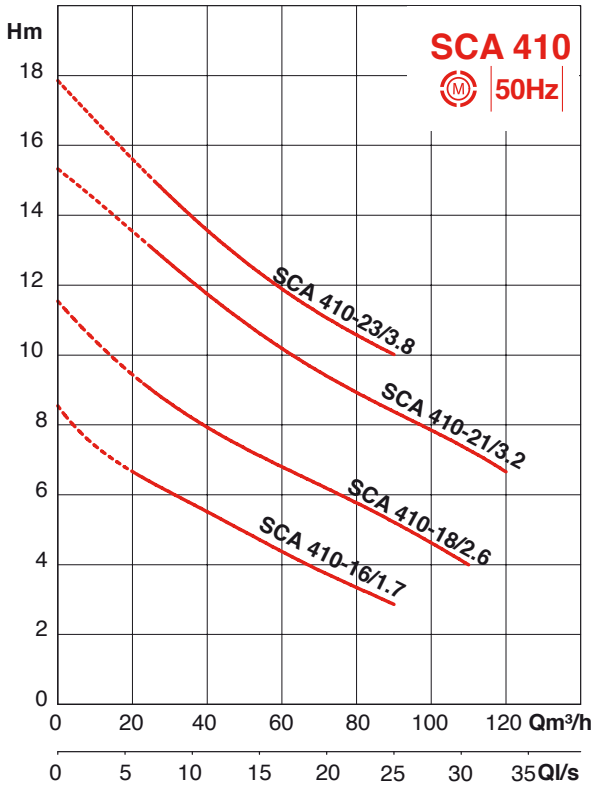

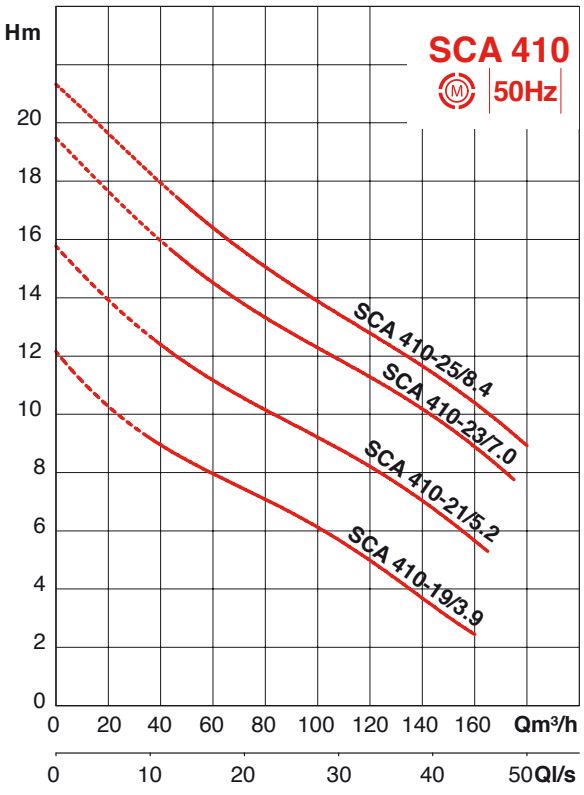

FUNCTIONAL SYSTEM DIAGRAMS

• Fixed system in submerged sump with complete pumping system

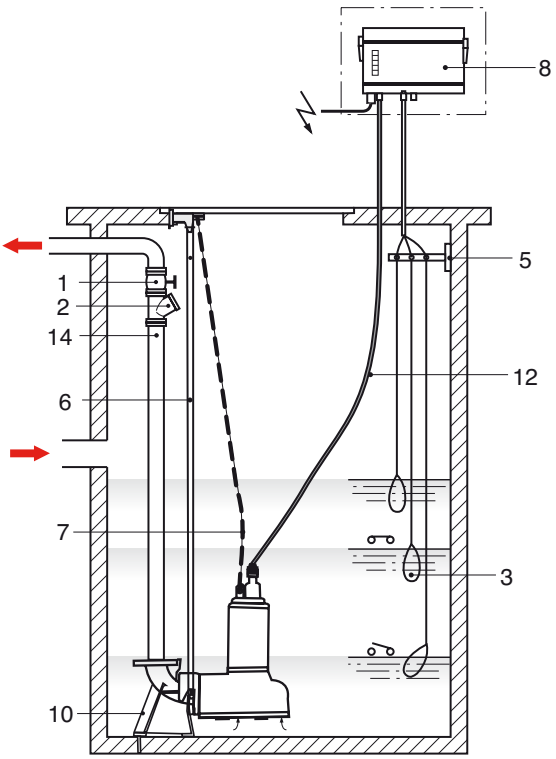

1 - Shut-off valve.
2 - Ball type non-return valve.
3 - Pump on/off float switch.
4 - Air pressure switch.
5 - Float support angle bracket kit / cable holder for IPAE.
6 - Ø50-60 - G2 guide bars.
7 - Pump lifting chain.
8 - Standard switch box.
9 - Switch box for ADF system.
10 - Attachment base foot.
11 - Height extension foot.
12 - Electric cable length 10 m.
13 - Flexible tube.
14 - Air cock hole to be created.
15 - Anti-vibration sleeve.
16 - Piping support rods.

• Fixed system - ADF in submerged sump

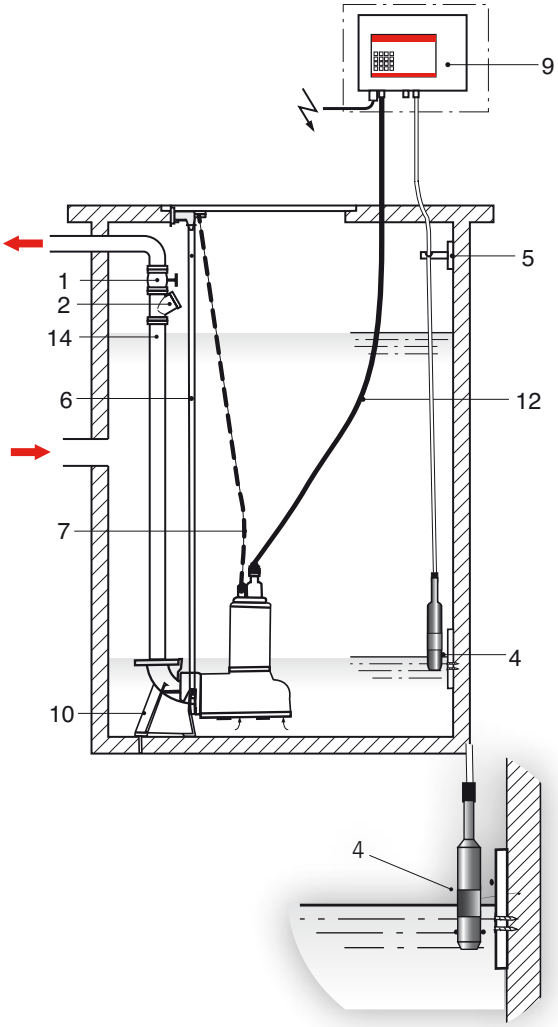

• Fixed system - in dry sump - direct assembly on piping

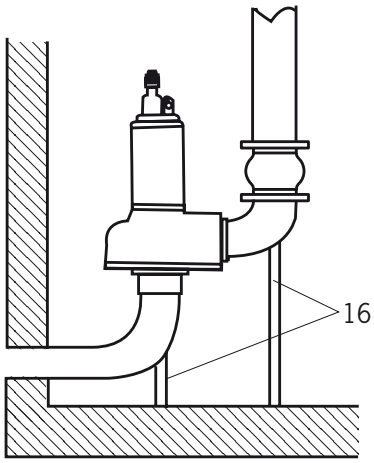

• MOBILE submerged sump system

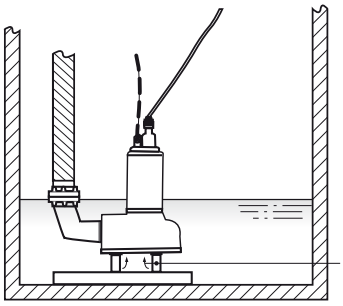

SCA 408-410

ELECTRICAL AND DIMENSIONAL FEATURES

REFERENCE ORDER	DNR	DNA	Max. grading	A	B	C	E	F	H	J	K	L	L1	M	N	O	P1	P2	P3
				mm	mm	mm	mm	mm	mm	mm	mm	mm	mm	mm	mm	mm	mm	mm	mm
SCA 408	80	100	80 mm	200	160	18	57	228	725	200	428	200	615	360	135	240	315	365	355
SCA 410-16/1,7 à/to -23/3,8	100	100	95 mm	220	180	18	58	228	725	200	428	225	615	373	135	250	340	365	355
SCA 410-19/3,9 à/to -25/8,4	100	100	95 mm	220	180	18	58	255	749	211	460	225	615	373	140	255	370	385	365

REFERENCE ORDER	Q	R	S	T	U	V	W 1pump	W 2pumps	a	b	c	d	e	f	g	h	k	Mass
	mm	mm	mm	mm	mm	mm	Ø mm	mm	mm	mm	mm	mm	mm	mm	mm	mm	mm	kg
SCA- 408	105	136	238	590	490	793	650	700x1200	200	170	170	225	29	615	0	279	14	42
SCA 410-16/1,7 à/to -23/3,8	117	146	238	590	490	793	650	700x120	338	298	213	202	47	615	0	279	20	43
SCA 410-19/3,9 à/to -25/8,4	115	150	260	590	490	820	650	700x120	338	298	213	202	47	738	20	320	20	60

• Fixed system - vertical in submerged sump. Pump model represented : SCA 408

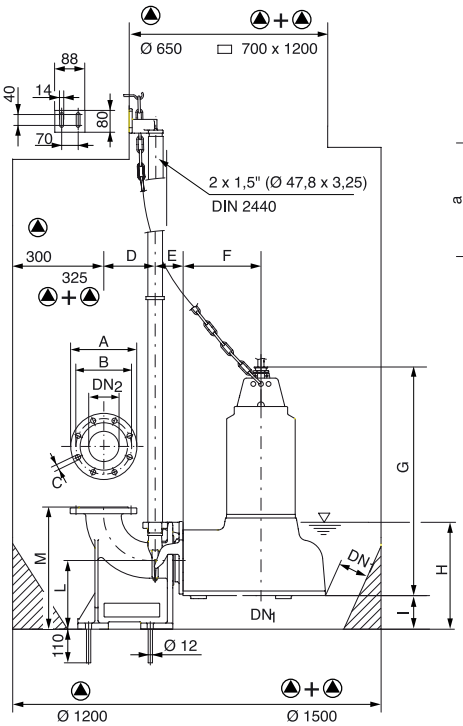

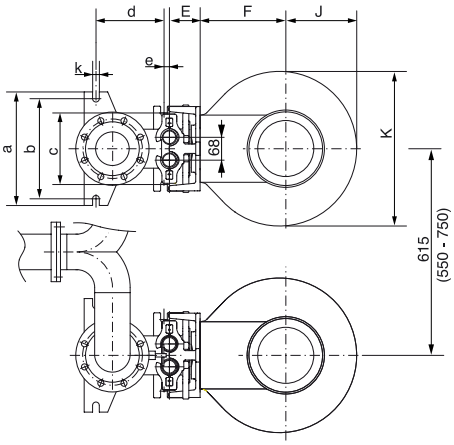

REFERENCE ORDER	P2	P1	I(A)	cables
	kW	kW	3x 400V	Ø S mm²
SCA 408-16/1.7 T4	1,7	2	6,4	7x1,5
SCA 408-17/2.1 T4	2,1	2,5	6,7	7x1,5
SCA 408-19/2.9 T4	2,9	3,3	7,3	7x1,5
SCA 408-21/3.7 T4	3,7	4,5	8,5	7x1,5
SCA 408-23/4.0 T4	4	5,1	9,5	7x1,5

REFERENCE ORDER	P2	P1	I(A)	cables
	kW	kW	3x 400V	Ø S mm²
SCA 410-16/1.7 T4	1,7	2,1	6,6	7x1,5
SCA 410-18/2.6 T4	2,6	3,4	7,5	7x1,5
SCA 410-19/3.9 T4	3,9	5	12,5	10x1,5
SCA 410-21/3.2 T4	3,2	4,8	9	7x1,5
SCA 410-21/5.2 T4	5,2	6,7	14,1	10x1,5
SCA 410-23/3.8 T4	3,8	5,2	9,5	7x1,5
SCA 410-23/7 T4	7	8,8	16,7	10x1,5
SCA 410-25/8.4 T4	8,4	10,6	18,8	10x1,5

• Mobile system - vertical.

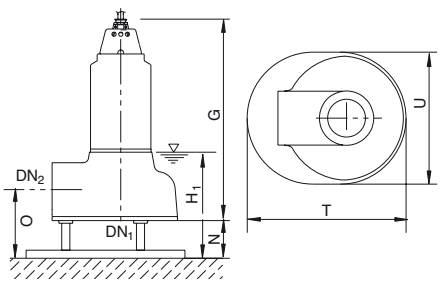

• Base foor, dry system.

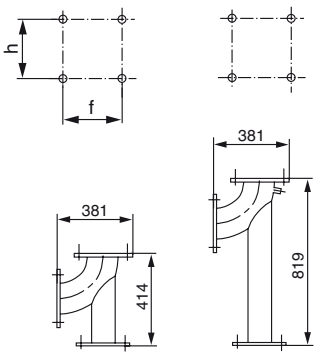

CONTROL SYSTEMS

Electronic protection and switch boxes

Model	YN 3000	YN 7000	MS Lift	SC Lift
				
Application	Level management in a sump with IPAE probe (not supplied).	Management of immersed lift or overpressure pump.	Management of levels for fixed sump or dry pit system.	Management of levels for fixed sump or dry pit system.
Number of pumps				
1 pump	YN3100	YN7100	1x4kW	1x...A
2 pumps	YN3200	-	2x4kW	2x...A
Features				
1x230V	yes	yes	yes	yes
3x230V	no	yes	no	yes
3x400V	yes	yes	yes	yes
Max. power per pump	4Kw	11Kw	4Kw	37Kw
Intensity				
Single phase	0,3 to 12A	1 to 23A	1,5 to 12A	0,5 to 72A
Three phase	0,3 to 10A	1 to 23A	1,5 to 12A	0,5 to 72A
Frequency	50/60Hz	50/60Hz	50/60Hz	50Hz
Protection index	IP65	IP54	IP54	IP54
Level detectors				
Float switch	yes	yes	yes	
1 pump	3	1 or 2	2	4
2 pumps	4	no	3	5
IPAE probe	yes	-	-	yes
Level electrode	-	2 supplied	-	-
Activation	Direct	Direct	Direct	Direct/Y Delta

Level detectors		SYSTEM TYPE			Cable length
		Deep well system	**Transportable system**	**Fixed system**	in metres
Regulation by level electrodes		**Advised**	Incompatible	Possible	sold by the metre
Clear water: Float switch Euroflot 423		Incompatible	**Advised**	Possible	10 or 20
Muddy water: Float switch Euroflot 430		Incompatible	Possible	Possible	10 or 20
Regulation by piezometric probe IPAE		Possible	Possible	**Advised**	10 or 30

SCA 408-410

ELECTRICAL ACCESSORIES

DESIGNATION	DESCRIPTION	REFERENCE ORDER
ALARMSON	Audible overflow alarm	2529590
ALARMSON S	Audible overflow alarm with 8h standby capacity	2529591
Motor protection case with control light and thermal protection with magneto-thermal activation	6,3 to 10A: SCA408 and SCA410 1,7 to 3,9kW	4066596
IPAE level probe	Readings at depth of 0 to 1m with 10m cable (compatible with YN3000 box and SC Lift)	2519924
	Readings at depth of 0 to 1m with 30m cable (compatible with YN3000 box and SC Lift)	2519925
	Readings at depth of 0 to 2.5m with 10m cable (compatible with YN3000 box and SC Lift)	2519921
	Readings at depth of 0 to 2.5m with 30m cable (compatible with YN3000 box and SC Lift)	2519922
NIVO430 level regulator	with 10m cable	4027319
NIVO430 level regulator	with 20m cable	4027320
Euroflot423 float switch	with 10m cable	4048483
Euroflot423 float switch	with 20m cable	4048484

- **Alarmson**, audible overflow or water shortage alarm box for clear and muddy water.

• ALARMSON



- **The ADF version of the IPAE box,** (Zener barrier) should be used for an ATEX system.



PARTICULARITIES

a) Electrical

- "T4": tree-phase 400 V-50 Hz.
- Thermal protection against excess current must be provided by circuit-breaker switch or protection and switch box.

b) Assembly

- Mobile or fixed system - horizontal or vertical - with complete guide system.
- Connected to system by welded backflange (not supplied for) :
- flexible or,
- rigid tube.
- Possibility of connecting all these pumps directly in dry sump system thanks to DN pump flange screwed directly to suction point.
- These pumps may be installed in dry sumps (vertical or horizontal position) or submerged sumps (vertical position).

Contact us for information on the dry sump system.

c) Packaging

- Pump delivered on pallet with motor protection and plastic film; electric cable with 7, 10 or 12 conductors, length 10 m ; without accessories. Motor sleeve protected by cardboard packaging.
- Intermediate chamber filled with cooling liquid in the factory.

d) Maintenance

- Replacement of spare parts recommended (•), or kits containing several spare parts:
- Seal kit,
- Stator / sleeve kit,
- Electric motor kit.

Contact us.

SUMBERGED SUMP SYSTEM - ACCESSORIES

• Fixed system on base foot

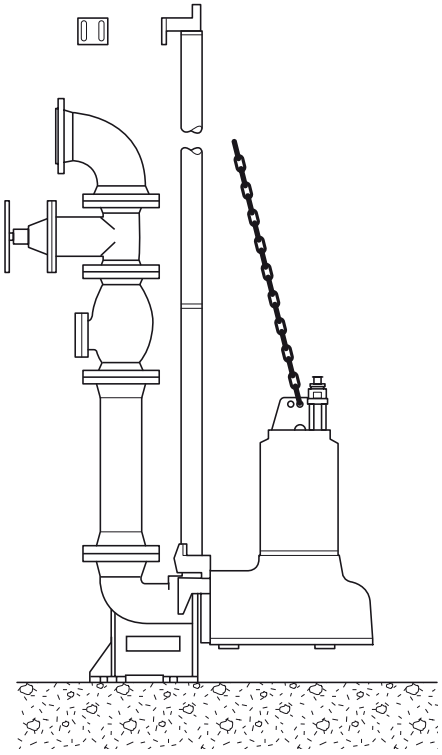

ACCESSORIES		DN80 Item ref.	DN100 Item ref.
	**Elbow**	2017689	2015592
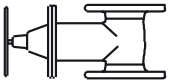	**Valve (cast iron)**	2017162	2017163
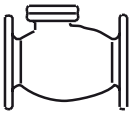	**Ball-type non-return valve (cast iron)**	4015761	4015762
	**Chain (zinc-coated steel)**	**5 m** 6060673 **10 m** 6060716	**5 m** 6060673 **10 m** 6060716
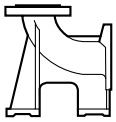	**Base foot (cast iron)**	2 bars 2029052	2 bars 2029053

• Mobile system

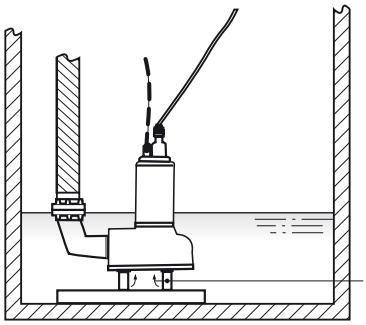

ACCESSORIES		DN80 Item ref.	DN100 Item ref.
	**Chain (stainless steel)**	**5 m** 6060677 **10 m** 6060679	**5 m** 6060677 **10 m** 6060679
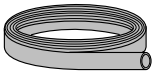	**Flexible pipe**	**10 m** 2017691 **20 m** 2017692 **30 m** 2017693	**10 m** 2015585 **20 m** 2015586 **30 m** 2015587
 a) b)	**Quick-fitting pipe union**	a) 18275 b) 18269	a) 19792 b) 18276
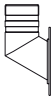	**Straight elbow**	2017698	2015591
	**Welded backflange (black steel)**	82247	82248
	Heigh extension (plate: stainless steel 3 feet: composite)	2017687	2015584

SCA 408-410

DRY SUMP SYSTEM - ACCESSORIES

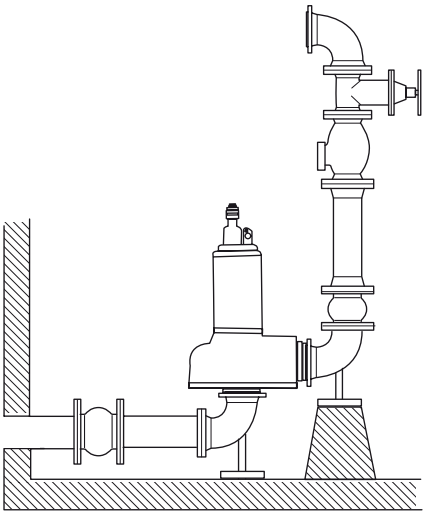

ACCESSORIES		DN80 Item ref.	DN100 Item ref.
	**Elbow**	2017689	2015592
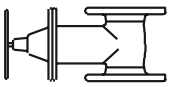	**Valve (cast iron)**	2017162	2017163
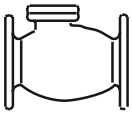	**Ball-type non-return valve (cast iron)**	4015761	4015762
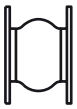	**Anti-vibration sleeve**	4015461	4015746
	**Panel sleeve**	2015590	2015590
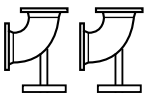	**Base foot kit**	KIT-BV-S408 2036898	KIT-BV-S410-C* 2035453 KIT-BV-S410-L** 2035454 C*: short - L**: long
	**Welded backflange (black steel)**	82247	82248

Compulsory accessory with box other than Yn...: probe connection box: SK545 (in case of replacement of previous ranges).
Ref: 2029300.

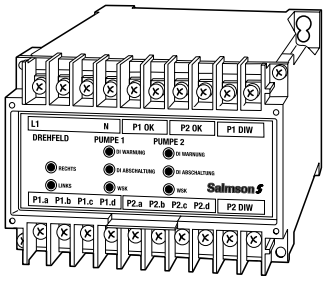

Float support angle bracket kit
Ref: 4013188

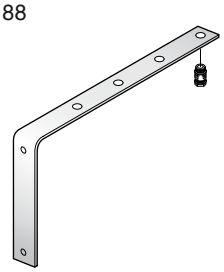

KIT-ADAPT/C100 :
adaptation sleeve SCA410/U6200, DN100.
Ref: 2019415

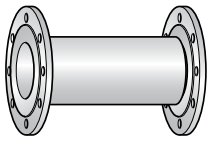

OPERATING RANGE

Flow rates up to:	**90 m³/h**
Head up to:	**29 mCE**
Liquid temperature range:	**+3 to 40°C***
Max. immersion depth:	**20 m**
Free flow:	**50, 65 or 80 mm**
DN discharge opening:	**50, 65 or 80**

*Maximum 60°C for 3 minutes

ROCSAN EVO

SUBMERSIBLE PUMPS

Muddy water pumping for collective use 2 and 4 pole - 50 Hz

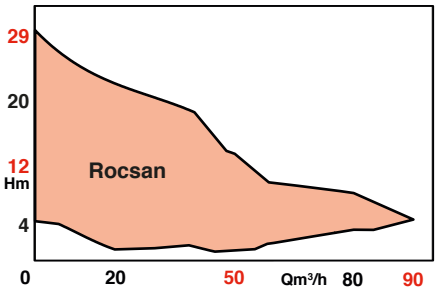

APPLICATIONS

Transportation of waste water containing solids and sewage to pumping stations.

Implementation adapted to intensive operation in pumping stations.

ADVANTAGES

- **Optimum coverage of operating ranges for each DN.**
- **Operating safety thanks to integrated controls.**
- **Double independent mechanical seals for optimum security.**
- **Full flow vortex impeller.**
- **Ceram C0 surfacing is available in option to improve corrosion protection.**
- **Versions on demand for dry installation (Up to 1,65kW in 2 pole and 1,25kW in 4 pole).**

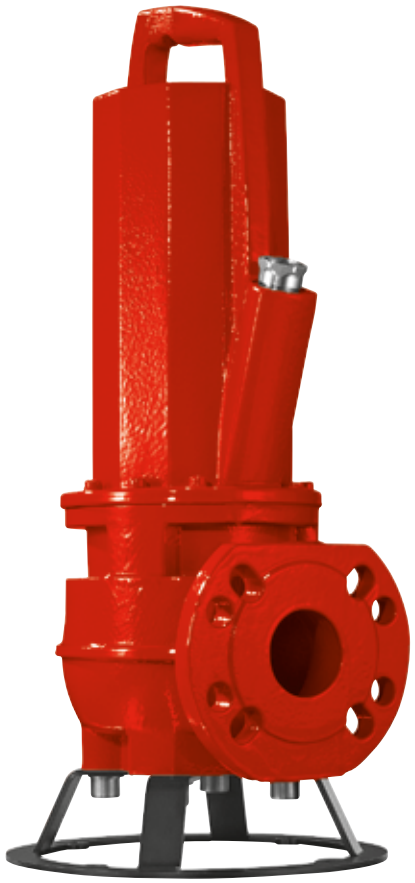

Support delivered separately

ROCSAN EVO

DESIGN

• Hydraulic part
- Submersible, vertical axis.
- Flanged connector.
- Shared pump/motor shaft.
- Axial suction under casing.
- Vortex impeller.

• Imperviousness
- Double mechanical seals,
- Leak detection electrode connecting to intermediate oil chamber.
- Wire-to-wire watertight cable input (cores immersed in a special resin).

• Motor
- **General**: watertight with dry rotor
- **Protection**: integrated PTO sensor (PTC sensor on request) protecting the motor against overheating.
- **Start-up**:
  Single-phase version: integrated capacitor.
  Three-phase version: direct start-up below 4 kW.
  Switch box and water level protection to be provided for single and three-phase versions.

- **Motor features**:

Rotation speed:	1450 or 2900 rpm
Network supply:	3~400 V, 50 Hz
Insulation category:	F
Protection index:	IP 68
EC compliance	
ATEX	

BASIC CONSTRUCTION

Main parts	Material
Pump casing	EN-GJL-250
Motor sleeve	EN-GJL-250
Motor shaft	Stainless steel 420
Vortex impeller	EN-GJL-250
Fluid side mechanical seal	SiC/SiC
Motor side mechanical sealr	Carbon/Ceramic

PRE-SELECTION GRAPH

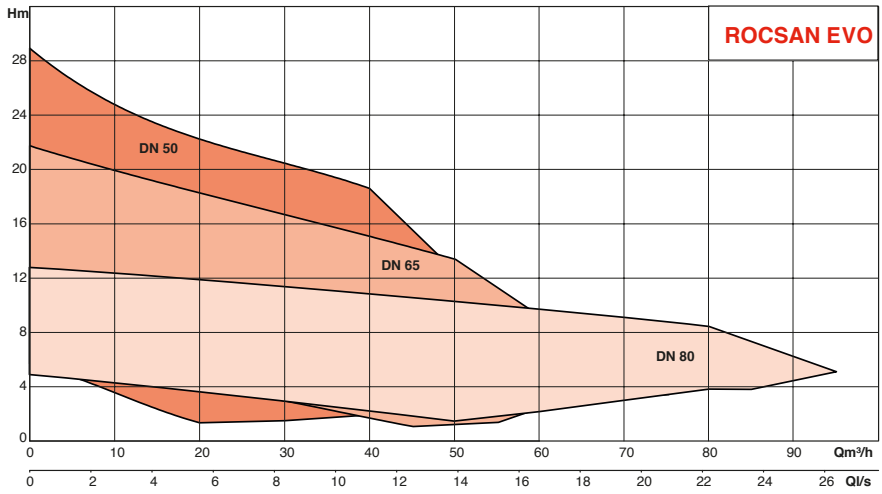

OPERATING PRINCIPLE

S1 Continuous	Immersed*	
S2 Occasional	Emerged	30 mins
S3 Intermittent	Emerged	50%

* Emerged on demand

Starting frequency:
- recommended: 20 start-ups/h,
- maximum : 50 start-ups/h

IDENTIFICATION

Rocsan evo V05DA-122/E...-0

Group

Range

Impeller type: V= vortex impeller

Nominal connection diameter:
05 = DN 50
06 = DN 65
08 = DN 80

D = Open hydraulics suction side according to DIN

Hydraulic material design
A = standard execution

Hydraulics type

Motor type:
E = dry chamber motor

Additional electrical equipment:
O = With free cable end

HYDRAULIC PERFORMANCES - 2900 RPM

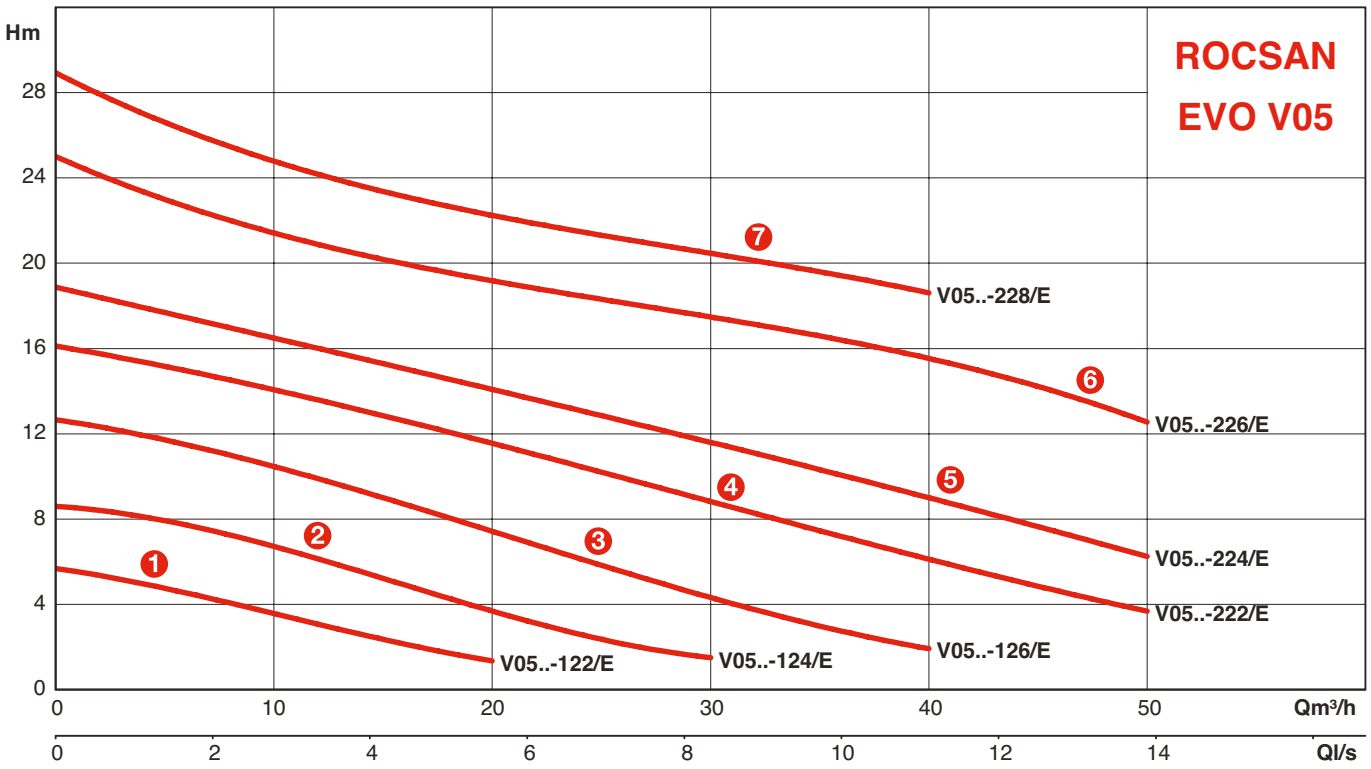

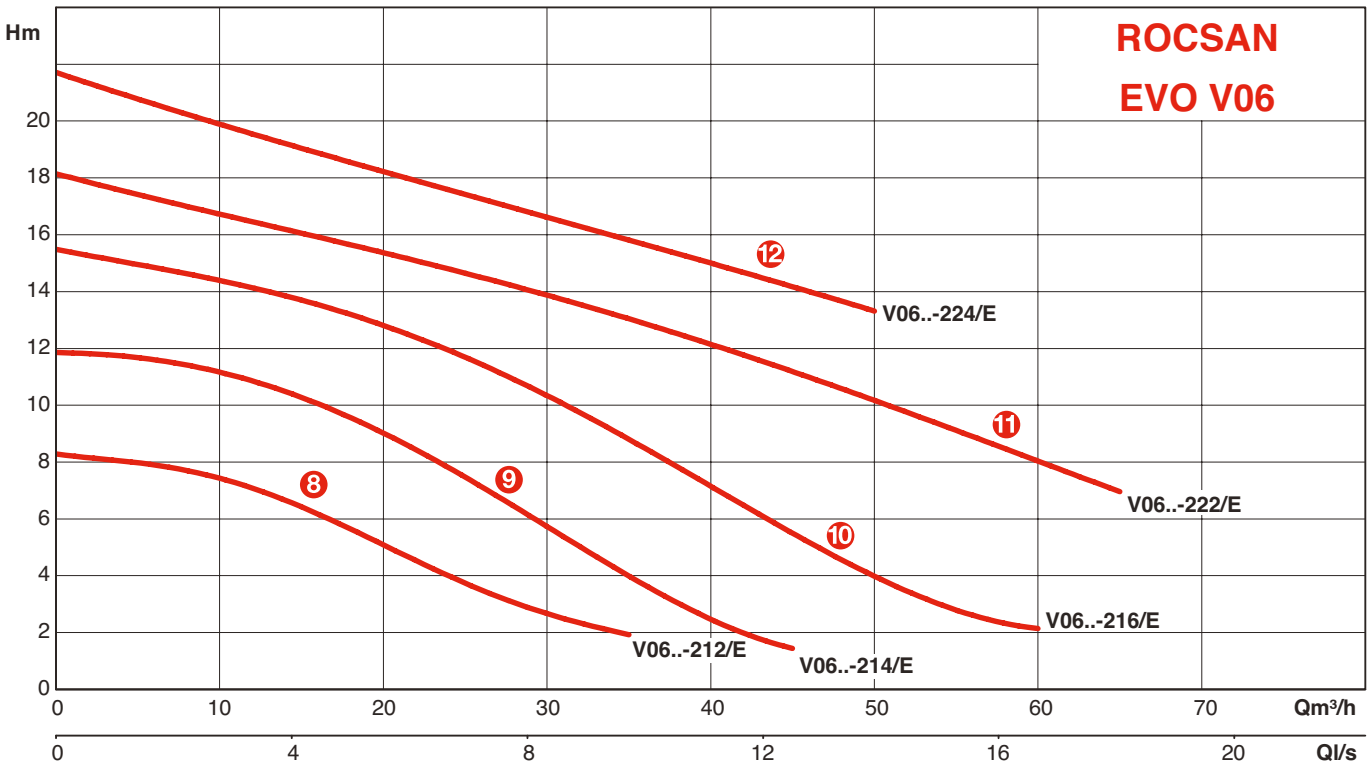

ROCSAN EVO

HYDRAULIC PERFORMANCES - 1450 RPM

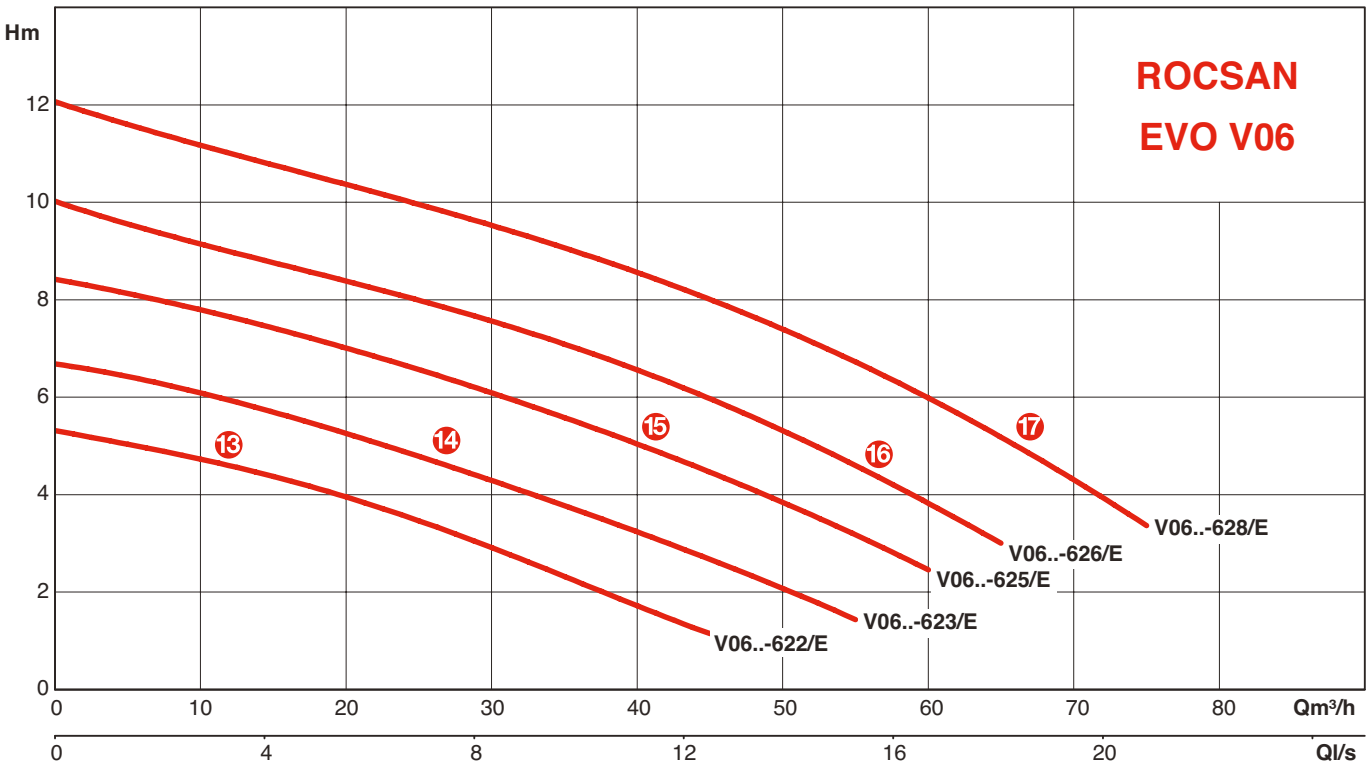

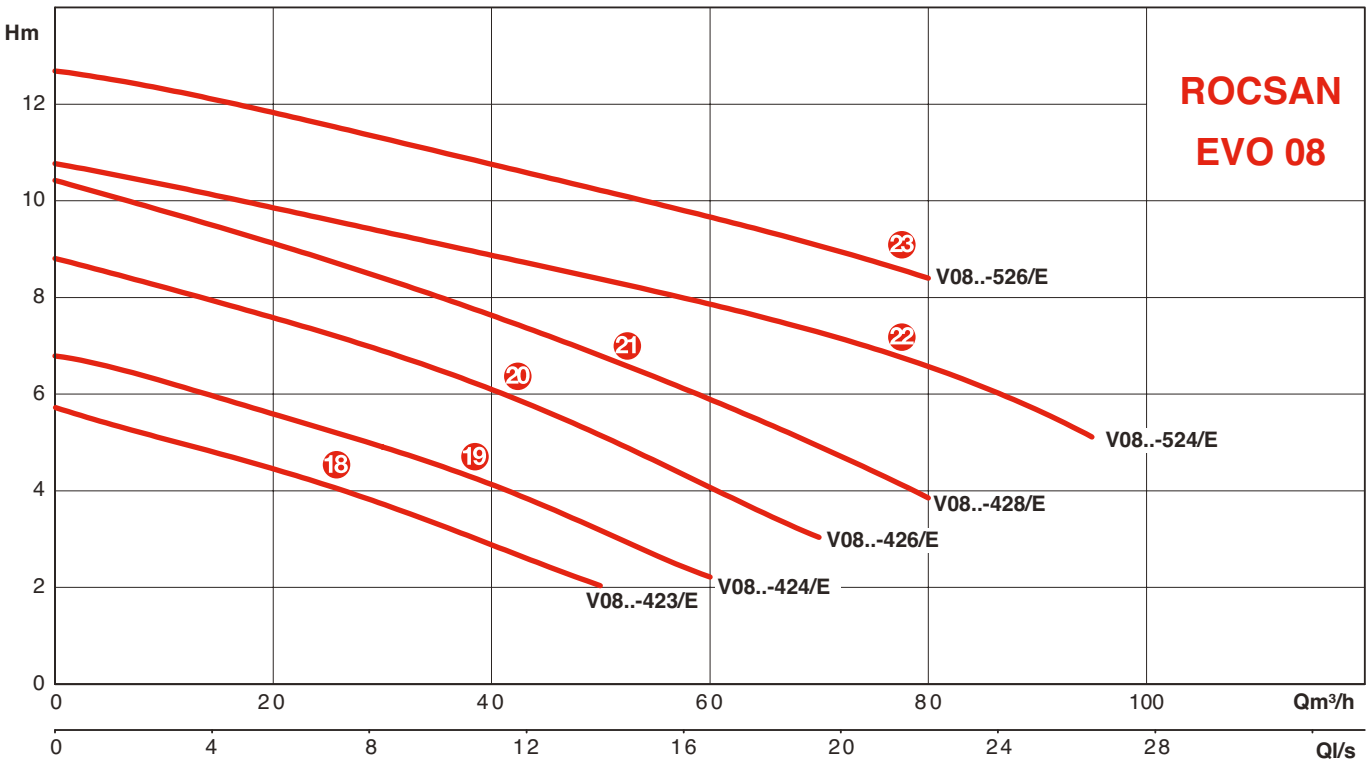

DIMENSIONS AND SPACE REQUIREMENT

- **Rocsan evo V05 mobile system DN50**

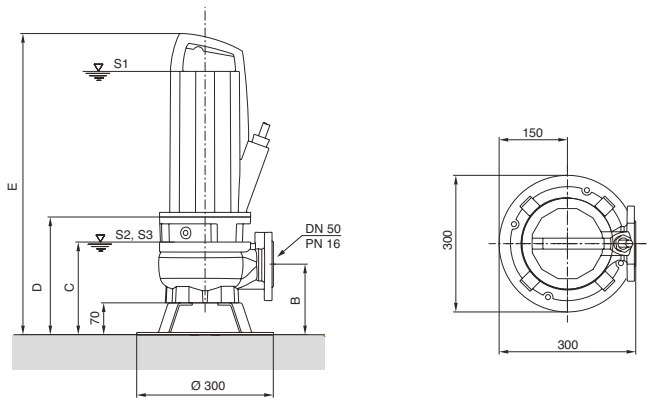

- **Rocsan evo V05 fixed system DN50**

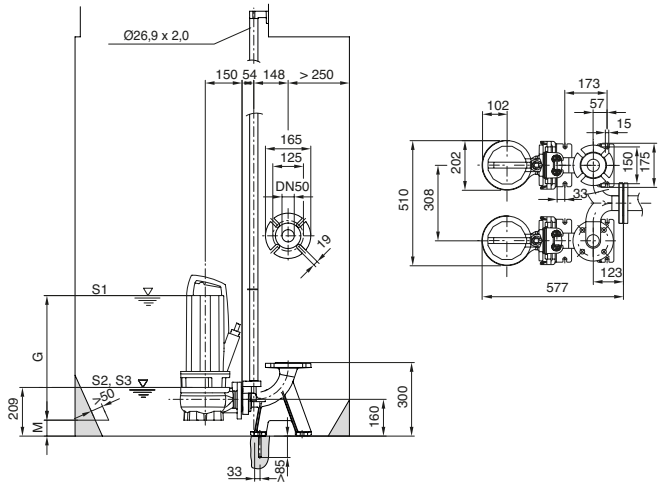

Reference	B	C	D	E	G	L	M
	mm	mm	mm	mm	mm	mm	mm
Rocsan evo V05DA-122/E	148	196	251	569	417	72	82
Rocsan evo V05DA-124/E	148	196	251	569	417	72	82
Rocsan evo V05DA-126/E	148	196	251	569	417	72	82
Rocsan evo V05DA-222/E	155	203	258	661	508	65	75
Rocsan evo V05DA-224/E	155	203	258	661	508	65	75
Rocsan evo V05DA-226/E	155	203	258	661	508	65	75
Rocsan evo V05DA-228/E	155	203	258	661	508	65	75

TECHNICAL DATA

Reference	Curve	Operation		P2	P1	In	Speed	Network voltage	IP	Cable	Mass	Grading	Start-up
		Out of water	immersed	kW	kW	A	rpm			m	kg	mm	
Rocsan evo V05DA-122/EAD0X2-M0011-523-O	1	S2 - 30 min S3 - 50%	S1	1,1	1,6	7,2	2900	1~230 V, 50 Hz	68	10	48,2	50	Direct
Rocsan evo V05DA-122/EAD1X2-T0011-540-O	1	S2 - 30 min S3 - 50%	S1	1,1	1,4	2,7	2900	3~400 V, 50 Hz	68	10	48,2	50	Direct
Rocsan evo V05DA-124/EAD0X2-M0011-523-O	2	S2 - 30 min S3 - 50%	S1	1,1	1,6	7,2	2900	1~230 V, 50 Hz	68	10	48,3	50	Direct
Rocsan evo V05DA-124/EAD1X2-T0011-540-O	2	S2 - 30 min S3 - 50%	S1	1,1	1,4	2,7	2900	3~400 V, 50 Hz	68	10	48,3	50	Direct
Rocsan evo V05DA-126/EAD0X2-M0015-523-O	3	S2 - 30 min S3 - 50%	S1	1,5	2,1	9,3	2900	1~230 V, 50 Hz	68	10	48,3	50	Direct
Rocsan evo V05DA-126/EAD1X2-T0015-540-O	3	S2 - 30 min S3 - 50%	S1	1,5	1,9	3,4	2900	3~400 V, 50 Hz	68	10	48,3	50	Direct
Rocsan evo V05DA-222/EAD1X2-T0025-540-O	4	S2 - 30 min S3 - 50%	S1	2,5	3,2	5,3	2900	3~400 V, 50 Hz	68	10	53,7	50	Direct
Rocsan evo V05DA-224/EAD1X2-T0025-540-O	5	S2 - 30 min S3 - 50%	S1	2,5	3,2	5,3	2900	3~400 V, 50 Hz	68	10	53,7	50	Direct
Rocsan evo V05DA-226/EAD1X2-T0039-540-O	6	S2 - 30 min S3 - 50%	S1	3,9	4,7	7,7	2900	3~400 V, 50 Hz	68	10	57,8	50	Direct
Rocsan evo V05DA-228/EAD1X2-T0039-540-O	7	S2 - 30 min S3 - 50%	S1	3,9	4,7	7,7	2900	3~400 V, 50 Hz	68	10	57,8	50	Direct

ROCSAN EVO

DIMENSIONS AND SPACE REQUIREMENT

• **Rocsan evo V06 Mobile system DN65 or DN 80**

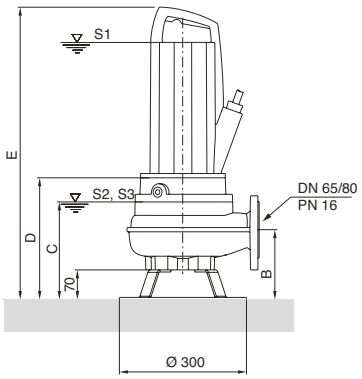

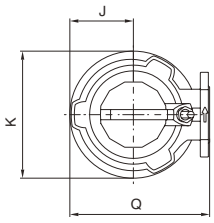

• **Rocsan evo V06 Fixed system DN65**

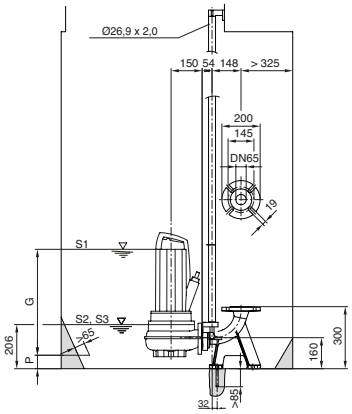

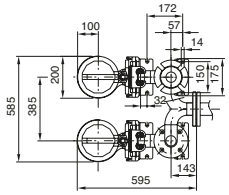

The outlet flange of the Rocsan evo V06 allows for the assembly of either DN65 or DN80 accessories

Rocsan evo V06 Fixed system DN80

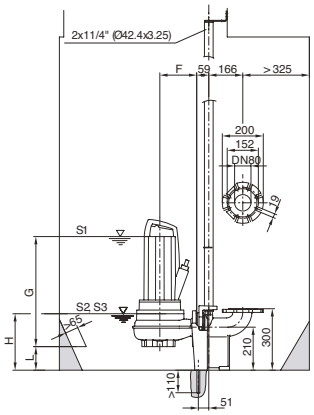

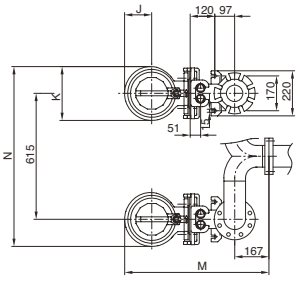

DIMENSIONS AND SPACE REQUIREMENT

Reference		B	C	D	E	G	L	M
		mm	mm	mm	mm	mm	mm	mm
Rocsan evo V06DA-212/E	155	211	266	584	431	256	100	200	125	642	815	75
Rocsan evo V06DA-214/E	155	211	266	584	431	256	100	200	125	642	815	75
Rocsan evo V06DA-216/E	155	211	266	669	516	256	100	200	125	642	815	75
Rocsan evo V06DA-222/E	155	211	266	–	–	256	100	200	125	642	815	75
Rocsan evo V06DA-224/E	155	211	266	–	–	256	100	200	125	642	815	75
Rocsan evo V06DA-622/E*	165	230	287	690	537	275	147	263	115	719	878	65
Rocsan evo V06DA-623/E*	165	230	287	690	537	275	147	263	115	719	878	65
Rocsan evo V06DA-625/E*	165	230	287	690	537	275	147	263	115	719	878	65
Rocsan evo V06DA-626/E*	165	230	287	690	537	275	147	263	115	719	878	65
Rocsan evo V06DA-628/E*	165	230	287	690	537	275	147	263	115	719	878	65

* In compliance with the free passage under pumps (65mm) , use guide bars DN80.

TECHNICAL DATA

Reference	Curve	Operation		P2	P1	In	Speed	Network voltage	IP	Cable	Mass	Grading	Start-up
		Out of water	immersed	kW	kW	A	rpm			m	kg	mm	
Rocsan evo V06DA-212/EAD0X2-M0011-523-O	8	S2 - 30 min S3 - 50%	S1	1,1	1,6	7,2	2900	1~230 V, 50 Hz	68	10	49,1	65	Direct
Rocsan evo V06DA-212/EAD1X2-T0011-540-O	8	S2 - 30 min S3 - 50%	S1	1,1	1,4	2,7	2900	3~400 V, 50 Hz	68	10	49,1	65	Direct
Rocsan evo V06DA-214/EAD0X2-M0015-523-O	9	S2 - 30 min S3 - 50%	S1	1,5	2,1	9,3	2900	1~230 V, 50 Hz	68	10	49,2	65	Direct
Rocsan evo V06DA-214/EAD1X2-T0015-540-O	9	S2 - 30 min S3 - 50%	S1	1,5	1,9	3,4	2900	3~400 V, 50 Hz	68	10	49,2	65	Direct
Rocsan evo V06DA-216/EAD1X2-T0025-540-O	10	S2 - 30 min S3 - 50%	S1	2,5	3,2	5,3	2900	3~400 V, 50 Hz	68	10	53,3	65	Direct
Rocsan evo V06DA-222/EAD1X2-T0039-540-O	11	S2 - 30 min S3 - 50%	S1	3,9	4,7	7,7	2900	3~400 V, 50 Hz	68	10	57,7	65	Direct
Rocsan evo V06DA-224/EAD1X2-T0039-540-O	12	S2 - 30 min S3 - 50%	S1	3,9	4,7	7,7	2900	3~400 V, 50 Hz	68	10	57,7	65	Direct
Rocsan evo V06DA-622/EAD0X4-M0011-523-O	13	S2 - 30 min S3 - 50%	S1	1,1	1,6	7	1450	1~230 V, 50 Hz	68	10	64,7	65	Direct
Rocsan evo V06DA-622/EAD1X4-T0011-540-O	13	S2 - 30 min S3 - 50%	S1	1,1	1,5	3,4	1450	3~400 V, 50 Hz	68	10	63,7	65	Direct
Rocsan evo V06DA-623/EAD0X4-M0015-523-O	14	S2 - 30 min S3 - 50%	S1	1,5	2,1	9,3	1450	1~230 V, 50 Hz	68	10	64,7	65	Direct
Rocsan evo V06DA-623/EAD1X4-T0015-540-O	14	S2 - 30 min S3 - 50%	S1	1,5	2,1	3,9	1450	3~400 V, 50 Hz	68	10	63,7	65	Direct
Rocsan evo V06DA-625/EAD0X4-M0015-523-O	15	S2 - 30 min S3 - 50%	S1	1,5	2,1	9,3	1450	1~230 V, 50 Hz	68	10	64,9	65	Direct
Rocsan evo V06DA-625/EAD1X4-T0015-540-O	15	S2 - 30 min S3 - 50%	S1	1,5	2,1	3,9	1450	3~400 V, 50 Hz	68	10	63,9	65	Direct
Rocsan evo V06DA-626/EAD1X4-T0025-540-O	16	S2 - 30 min S3 - 50%	S1	2,5	3,3	6	1450	3~400 V, 50 Hz	68	10	66	65	Direct
Rocsan evo V06DA-628/EAD1X4-T0025-540-O	17	S2 - 30 min S3 - 50%	S1	2,5	3,3	6	1450	3~400 V, 50 Hz	68	10	66,1	65	Direct

ROCSAN EVO

DIMENSIONS AND SPACE REQUIREMENT

• **Rocsan evo V08 Mobile system DN80**

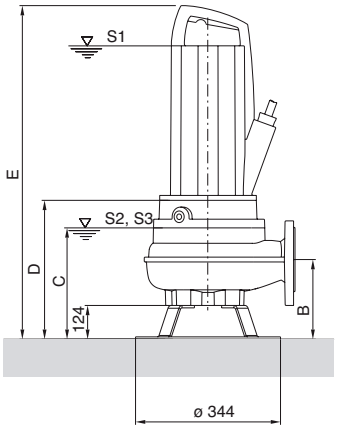

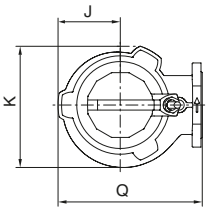

• **Rocsan evo V08 Fixed system DN80**

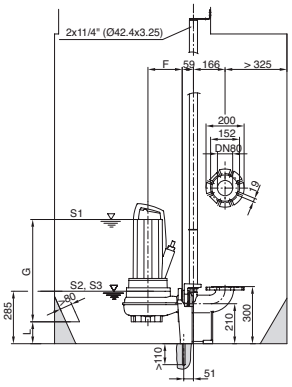

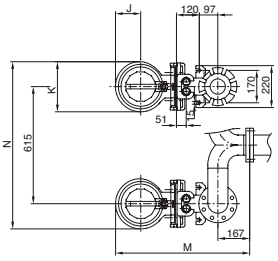

Reference		B	C	D	E	G	L	M
		mm	mm	mm	mm	mm	mm	mm
Rocsan evo V08DA-423/E	229	304	361	764	195	557	148	288	105	642	903	343
Rocsan evo V08DA-424/E	229	304	361	764	195	557	148	288	105	642	903	343
Rocsan evo V08DA-426/E	229	304	361	764	195	557	148	288	105	642	903	343
Rocsan evo V08DA-428/E	229	304	361	764	195	557	148	288	105	642	903	343
Rocsan evo V08DA-524/E	234	309	366	769	205	562	153	312	100	719	927	358
Rocsan evo V08DA-526/E	234	309	366	769	205	562	153	312	100	719	927	358

TECHNICAL DATA

Reference	Curve	Operation		P2	P1	In	Speed	Network voltage	IP	Cable	Mass	Grading	Start-up
		Out of water	immersed	kW	kW	A	rpm			m	kg	mm	
V08DA-423/EAD1X4-T0011-540-O	18	S2 - 30 min S3 - 50%	S1	1,1	1,5	3,4	1450	3~400 V, 50 Hz	68	10	70,9	80	Direct
V08DA-424/EAD0X4-M0011-523-O	19	S2 - 30 min S3 - 50%	S1	1,1	1,5	7,7	1450	1~230 V, 50 Hz	68	10	72,1	80	Direct
V08DA-424/EAD1X4-T0011-540-O	19	S2 - 30 min S3 - 50%	S1	1,1	1,5	3,4	1450	3~400 V, 50 Hz	68	10	71,1	80	Direct
V08DA-426/EAD0X4-M0015-523-O	20	S2 - 30 min S3 - 50%	S1	1,5	2,2	9,4	1450	1~230 V, 50 Hz	68	10	72,2	80	Direct
V08DA-426/EAD1X4-T0015-540-O	20	S2 - 30 min S3 - 50%	S1	1,5	2,1	3,9	1450	3~400 V, 50 Hz	68	10	71,2	80	Direct
V08DA-428/EAD1X4-T0025-540-O	21	S2 - 30 min S3 - 50%	S1	2,5	3,3	6	1450	3~400 V, 50 Hz	68	10	73,3	80	Direct
V08DA-524/EAD0X4-T0035-540-O	22	S2 - 30 min S3 - 50%	S1	3,5	4,5	7,9	1450	3~400 V, 50 Hz	68	10	76,6	80	Direct
V08DA-526/EAD0X4-T0035-540-O	23	S2 - 30 min S3 - 50%	S1	3,5	4,5	7,9	1450	3~400 V, 50 Hz	68	10	76,7	80	Direct

RECOMMENDED ACCESSORIES FOR MOBILE SYSTEM

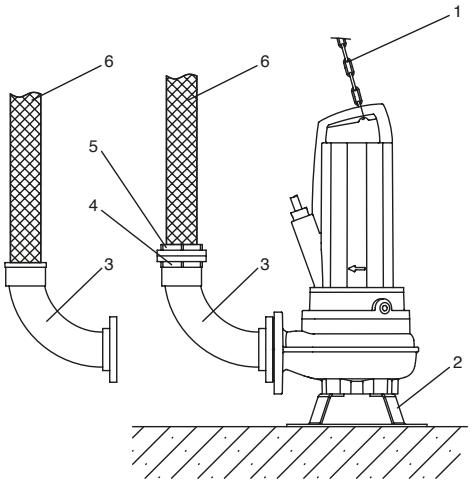

1) Pumping chain
2) Bracket
3) Elbow
4) and 5) Quick-fitting pipe unions
6) Flexible pipe

ACCESSORIES		Item reference
Bracket	Kit for DN50/65	6064667
	Kit for DN80	6022586
Elbow	Straight elbow DN50 PVC	4027343
	Straight elbow DN65 Cast iron	4027345
	Straight elbow DN80 Cast iron	6065692
Pipe (for use with ringed elbows)	10m Di63 pipe for elbow DN50	4027324
	10m Di70 pipe for elbow DN65	4027323
	20m Di75 pipe for elbow DN80	2014152
	30m Di75 pipe for elbow DN80	2014153
Stainless steel chain kit 316 (chain + 2 shackles)	Length 5m Links diameter 8mm for pump up to 400 kg	6063136
	Length 10m Links diameter 8mm for pump up to 400 kg	6063138

RECOMMENDED ACCESSORIES FOR FIXED SYSTEM

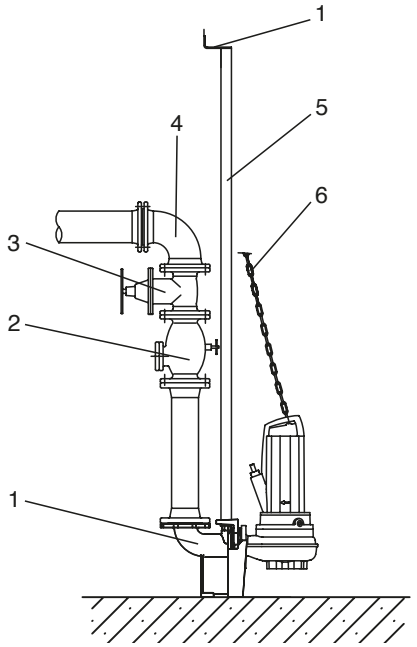

1) Support base
2) Non-return valve
3) Shut-off valve
4) Elbow
5) Guide bars
6) Pumping chain

ACCESSORIES		Item reference
Stop valves	Stop valve DN50	2017160
	Stop valve DN65	2014646
	Stop valve DN80	2017162
Non-return valve	Ball-type non-return valve DN50 PN 10	4015465
	Ball-type non-return valve DN65 PN 10	4015760
	Ball-type non-return valve DN80 PN 10/16	4015761
Float	Nivo 430X1-10M	4027319
	Nivo 430X1-20M	4027320
	Float support angle bracket kit	4013188
IPAE	IPAE with 10 m cable	2519921
	IPAE with 30m cable	2519922
	IPAE with 50m cable	2519923
	Cable holder for IPAE (5)	2519927
	IPAE case version ADF (Zener barrier)	2521216
Stainless steel chain kit 316 (chain + 2 shackles)	Length 5m Links diameter 8mm for pump up to 400 kg	6063136
	Length 10m Links diameter 8mm for pump up to 400 kg	6063138
Support base	For DN50	6064369
	For DN65	6066845
	For DN80	6022585
	(guide bars not included)	

ROCSAN EVO

CONTROL SYSTEMS

Modèle	YN 3000	MS Lift	SC Lift
			
Application	Level management in a sump with EAPS probe (not supplied).	Management of levels for fixed sump or dry pit system.	Management of levels for fixed sump or dry pit system.
Number of pumps			
1 pump	YN3100	1x4kW	1x...A
2 pumps	YN3200	2x4kW	2x...A
Features			
1x230V	yes	yes	on demand
3x230V	no	no	no
3x400V	yes	yes	yes
Max. power per pump	4Kw	4Kw	37Kw
Intensity			
Single phase	0,3 to 12A	1,5 to 12A	0,5 to 12A
Three phase	0,3 to 10A	1,5 to 12A	0,5 to 72A
Frequency	50/60Hz	50/60Hz	50Hz
Protection index	IP65	IP54	IP54
Level detectors			
Float switch	yes	yes	yes
1 pump	3	2	4
2 pumps	4	3	5
IPAE probe	yes	no	yes

Level detectors		SYSTEM TYPE			Cable length
		Deep well system	**Transportable system**	**Fixed system**	in metres
Clear water: Float switch Euroflot 423		Incompatible	**Advised**	Possible	10 or 20
Muddy water: Float switch Nivo 430		Incompatible	Possible	Possible	10 or 20
Regulation by piezometric probe EAPS		Possible	Possible	**Advised**	10 or 30

·Contact us for adjustment flanges for base frames.

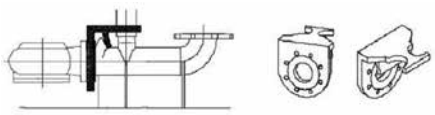

FEATURES

a) Electrical

- Single phase versions P or A : CE mains plug with earth (type C+E+F).
- Three phase version A : 16A plug 3P+N+T.
- Thermal protection against excess current must be provided by circuit-breaker switch or protection and switch box.

b) Assembly

- pump in vertical position for fixed or mobile system.
- **mobile system**: discharge opening connected by an elbow to flexible piping with a diameter greater than the discharge diameter of the pump.
- **double system**: the pumps may be joined together with a collector.
- Non-return valve and additional valves to be assembled preferably on upper part of discharge line.
- Connection by flexible or rigid piping.

c) Packaging

- Pump delivered on a pallet.
- Pump delivered with electric cable H07RN-F.
- Accessories packed separately.

OPERATING RANGES

Flow rates of up to:	**360 m³/h**
Manometric heads of up to:	**62 m**
Max. submergence depth:	**12,5 m**
Max. particle size:	**Ø 50 to 80***
DN of delivery port:	**80/100/150 mm**
IP :	**68**

*according to models

UVO-UCA-UCB

SUBMERSIBLE PUMPS
Pumping of muddy water
Collective
2 and 4 pole - 50 Hz

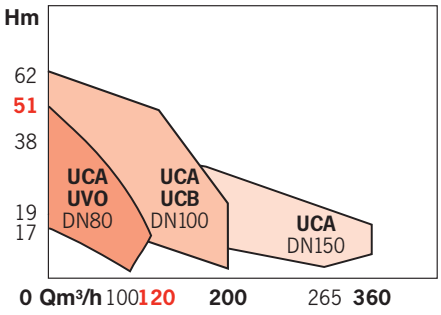

APPLICATIONS

Pumps designed for intermittently operating pumping and disposal plants.

Pumping of:
- wastewater
- sewage
- flume water (max. 8% solids)
- industrial water

Emptying of:
- septic tanks
- sewers
- municipal reservoirs
- water treatment plants

BENEFITS

- **Continuous operation S1 submerged.**
- **Safe operation, thanks to thermal protection sensors and moisture sensors.**
- **Anti-capillary cable.**
- **Possible to maintain the oil chamber from outside.**



UVO-UCA-UCB

DESIGN

• Hydraulic part:

- Submersible, vertical axis.
- Common pump / motor shaft.
- Intermediate chamber between pump and motor filled with oil and insulated by a double seal.
- Mechanical seal on fluid side and lip seal on motor side for the UCA 208, 410 and UVO 208 10.5 kW.
- Double mechanical cartridge seal for UCB 410, UCA 415 and UVO 208, except for UVO 208 10.5 kW.
- Three types of impellers: single-vane, double-vane and vortex.

• Motor

- Sealed dry runner
- Integrated thermal sensor protects the motor from any overheating. Provide a switch and low-water protection box.
- Direct starting up to 4 kW; above this, star delta starting.
- Speed: 1,450 and 2,900 rpm
- Winding: 3 ~ 400 V
- Frequency: 50 HZ
- Insulation class: 155 (F)
- Protection class: IP 68
- EC Conformity

Moisture detector on all models except UCB 410

MECHANICAL SEAL PRINCIPLE

K Type: Double mechanical seal in a cartridge

Double mechanical seal, silicon carbide friction surfaces (highly resistant to wear) and Viton gasket, integrated into a stainless steel cartridge.

Benefits:

- Compact assembly reducing stress on the step bearing.
- Great resistance to wear and corrosion.
- Operational safety.
- Long service life
- Operation independent of the direction of rotation
- Easy servicing, quick and easy assembly/ dismantling.
- Standardised model.

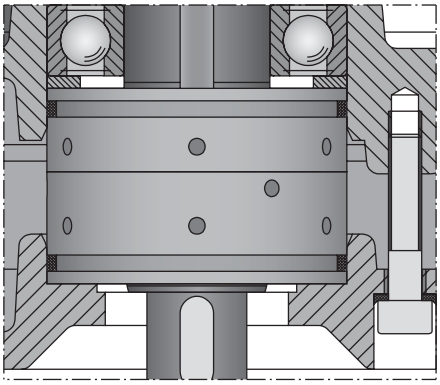

H type: Double sealing mechanism

Hydraulic side: single mechanical seal,silicon carbide friction surfaces (highly resistant to wear) and Viton seal.

Motor side: Viton lip seal.

Benefits:

- Simple and robust sealing mechanism
- Low cost
- Standardised model

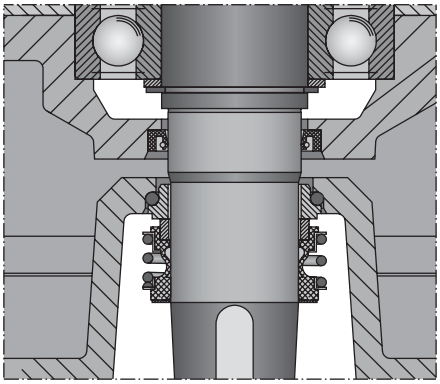

IDENTIFICATION

UCA 2 08 12/3,7 T4
CB 4
VO

Series code
CA: single-vane impeller
CB: double-vane impeller
VO: Vortex impeller

Number of poles

Delivery diameter in cm

Impeller diameter in cm

P2 in kW

T4: 400 V three-phase

BASIC CONSTRUCTION

Model	UCA 208	UVO 208	UCA 410	UCB 410	UCA 415
Pump housing	EN-GJL 200		EN-GJL 250	EN-GJS 500-7	EN-GJL 250
Impeller	GGG 50 (0.7050)	UVO 208-16 and UVO 208-17 : EN-GJL 200 (GG20 - 0.6020) UVO 208-19 and UVO 208-21 : GGG50 (0.7050)	EN-GJL 250	EN-GJS 500-7	EN-GJL 250
Shaft	AISI-420				
Mechanical seal	SiC / SiC				
Sealing on motor side with 10.5 kW Viton SiC / SiC	Viton	SiC / SiC except UVO 208-16 with 10,5 kW	Viton	SiC / SiC	
Motor housing	GG25		GG25	GG25	GG25

HYDRAULIC PERFORMANCES

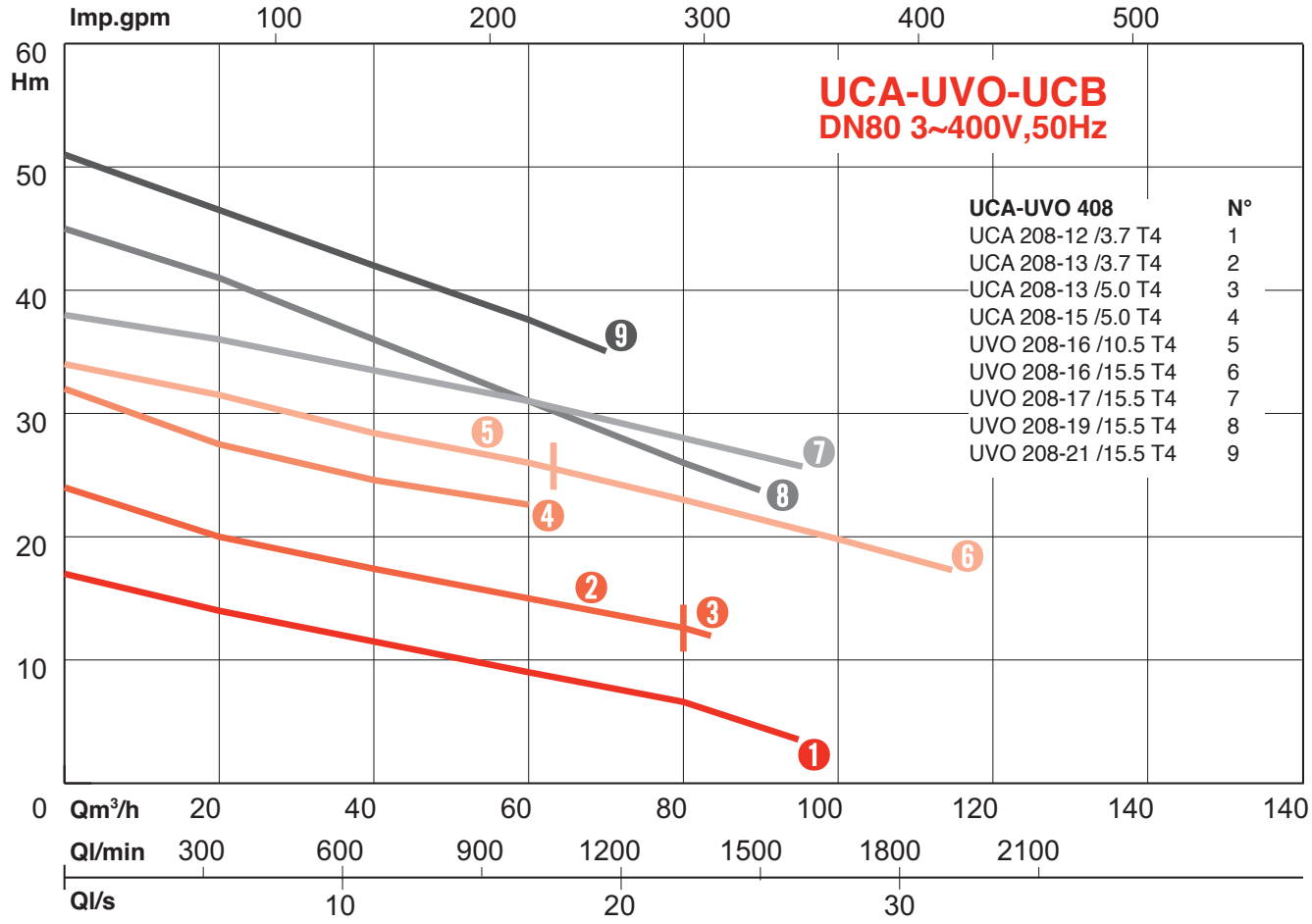

UVO-UCA-UCB

HYDRAULIC PERFORMANCES

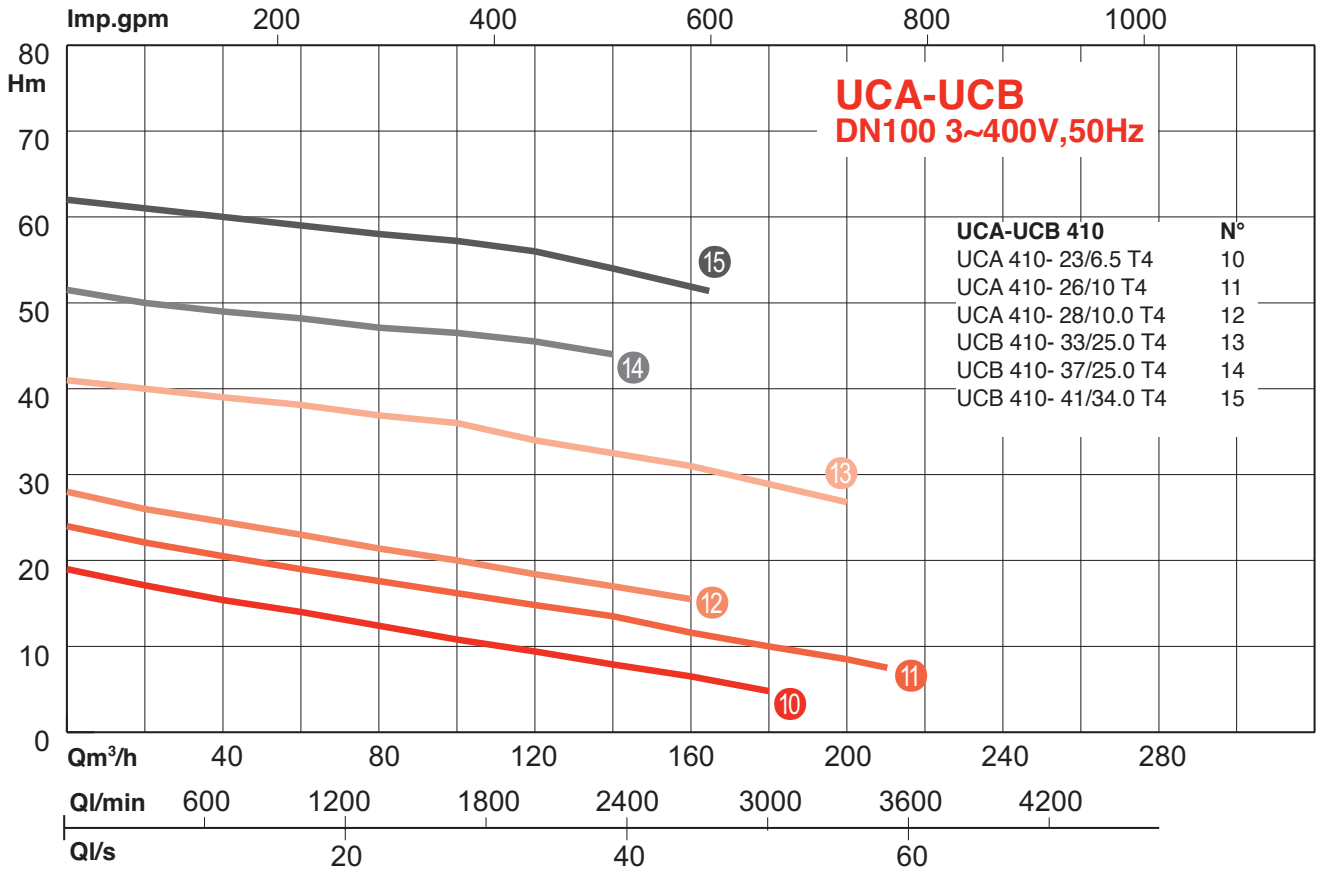

HYDRAULIC PERFORMANCES

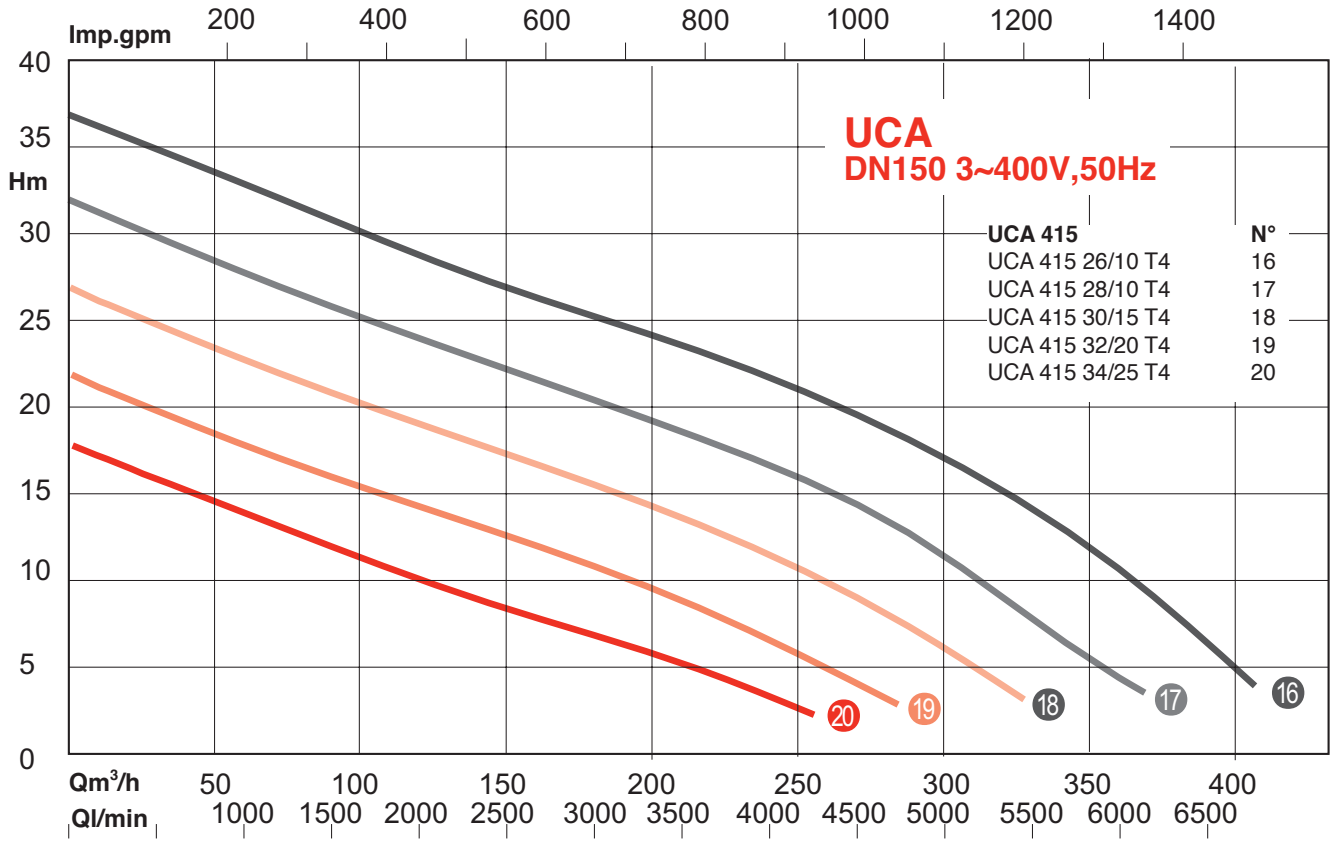

UVO-UCA-UCB

DIMENSIONS AND REQUIRED SPACE

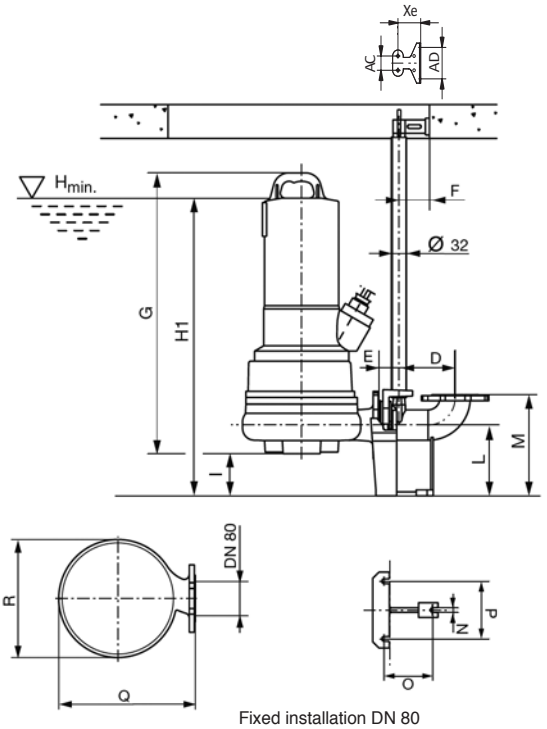

Fixed installation DN 80

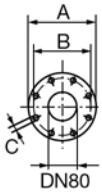

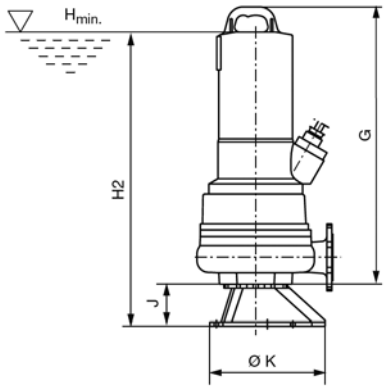

Mobile installation DN 80

UCA-UVO 208	A	B	C	D	E	F	G	H1	H2	I	J	K	L	M	N	O	P	Q	R
UCA208-12/3.7 T4	200	160	18	166	59	90	539	580	585	119	124	344	210	300	15	120	170	264	229
UCA208-13/3.7 T4	200	160	18	166	59	90	539	580	585	119	124	344	210	300	15	120	170	264	229
UCA208-13/5.0 T4	200	160	18	166	59	90	594	635	640	119	124	344	210	300	15	120	170	264	229
UCA208-15/5.0 T4	200	160	18	166	59	90	593	635	640	119	124	344	210	300	15	120	170	264	229
UVO208-16/10.5 T4	200	160	18	166	59	90	753	790	805	110	124	344	210	300	15	120	170	374	340
UVO208-16/15.5 T4	200	160	18	166	59	90	875	910	925	110	124	344	210	300	15	120	170	374	340
UVO208-17/15.5 T4	200	160	18	166	59	90	875	910	925	110	124	344	210	300	15	120	170	374	340
UVO208-19/15.5 T4	200	160	18	166	59	90	832	880	880	125	124	344	210	300	15	120	170	405	350
UVO208-21/15.5 T4	200	160	18	166	59	90	832	880	880	125	124	344	210	300	15	120	170	405	350

TECHNICAL DATA

	Curve no.	Out-of-water operation	Submerged operation	P1 kW	P2 kW	I A	Speed rpm	Mains voltage	IP	Cable m	Mass kg	Particle size	Starting
UCA 208-12 /3.7 T4	1	S2 - 15	S1	4,7	3,75	7,6	2900	3~400V, 50Hz	68	15	55	70	direct
UCA 208-13 /3.7 T4	2	S2 - 15	S1	4,7	3,75	7,6	2900	3~400V, 50Hz	68	15	55	70	direct
UCA 208-13 /5.0 T4	3	S2 - 15	S1	5,9	5	9,7	2900	3~400V, 50Hz	68	15	59	70	Y - Δ
UCA 208-15 /5.0 T4	4	S2 - 15	S1	5,9	5	9,7	2900	3~400V, 50Hz	68	15	59	70	Y - Δ
UVO 208-16 /10.5 T4	5	S2 - 15	S1	12,3	10,5	20,5	2900	3~400V, 50Hz	68	15	119	80	Y - Δ
UVO 208-16 /15.5 T4	6	S2 - 15	S1	18,6	15,5	30	2900	3~400V, 50Hz	68	15	201	80	Y - Δ
UVO 208-17 /15.5 T4	7	S2 - 15	S1	18,6	15,5	30	2900	3~400V, 50Hz	68	15	201	80	Y - Δ
UVO 208-19 /15.5 T4	8	S2 - 15	S1	18,6	15,5	30	2900	3~400V, 50Hz	68	15	195	50	Y - Δ
UVO 208-21 /15.5 T4	9	S2 - 15	S1	18,6	15,5	30	2900	3~400V, 50Hz	68	15	195	50	Y - Δ

DIMENSIONS AND REQUIRED SPACE

• UCA-UVO 410

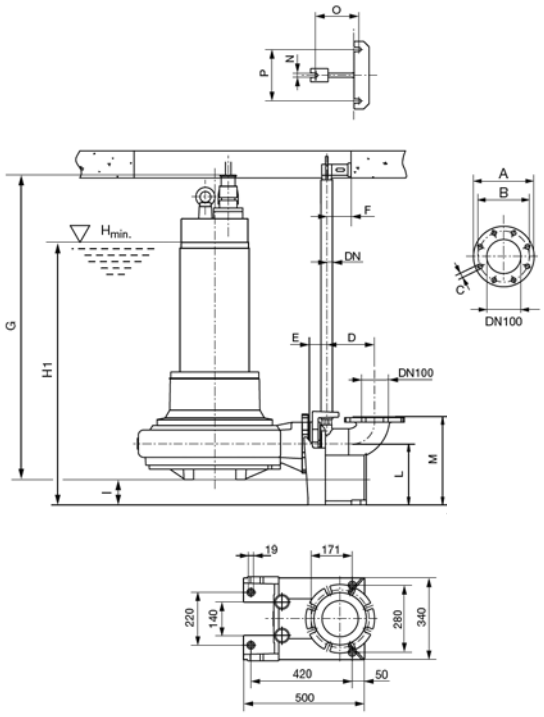

Fixed installation DN 100

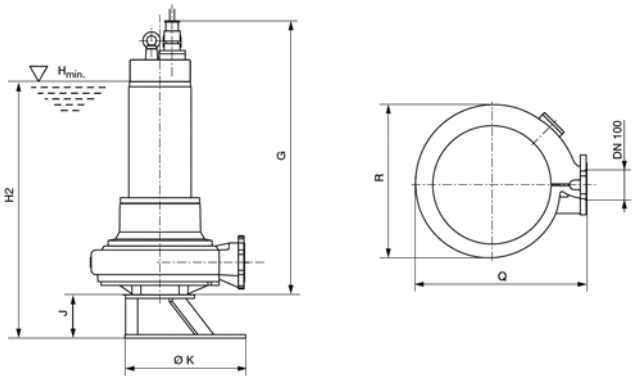

Mobile installation DN 100

UCA-UVO 410	A	B	C	D	E	F	G	H1	H2	I	J	K	L	M	N	O	P	Q	R	DN
UCA410-23/6.5 T4	220	180	18	176	65	90	664	710	715	120	124	320	225	325	15	160	190	448	394	32
UCA410-26/10.0 T4	220	180	18	176	65	90	744	670	795	120	124	320	225	325	15	160	190	448	394	32
UCA410-28/10.0 T4	220	180	18	176	65	90	744	670	795	120	124	320	225	325	15	160	190	448	394	32
UCB410-33/25.0 T4	285	240	22	241	109	120	1160	1160	1155	183	180	500	320	540	Base plate UCB 410			635	563	50
UCB410-37/25.0 T4	285	240	22	241	109	120	1160	1160	1155	183	180	500	320	540				635	563	50
UCB410-41/34.0 T4	285	240	22	241	109	120	1230	1230	1225	183	180	500	320	540				635	563	50

TECHNICAL DATA

	Curve	Out-of-water operation	Submerged operation	P1	P2	I	Speed	Mains voltage	IP	Cable	Mass	Particle size	Starting
	no			kW	kW	A	rpm			m	kg		
UCA 410- 23/6.5T4	10	-	S1	8,2	6,5	13,5	1450	3~400V, 50Hz	68	15	106	80	Y - Δ
UCA 410- 26/10.0T4	11	-	S1	12,2	10	21	1450	3~400V, 50Hz	68	15	137	80	Y - Δ
UCA 410- 28/10.0T4	12	-	S1	12,2	10	21	1450	3~400V, 50Hz	68	15	137	80	Y - Δ
UCB 410- 33/25.0T4	13	-	S1	28,5	25	49,5	1450	3~400V, 50Hz	68	15	361	80	Y - Δ
UCB 410- 37/25.0T4	14	-	S1	28,5	25	49,5	1450	3~400V, 50Hz	68	15	361	80	Y - Δ
UCB 410- 41/34.0T4	15	-	S1	39	34	68	1450	3~400V, 50Hz	68	15	415	80	Y - Δ

UVO-UCA-UCB

DIMENSIONS AND REQUIRED SPACE

• **UCA 415**

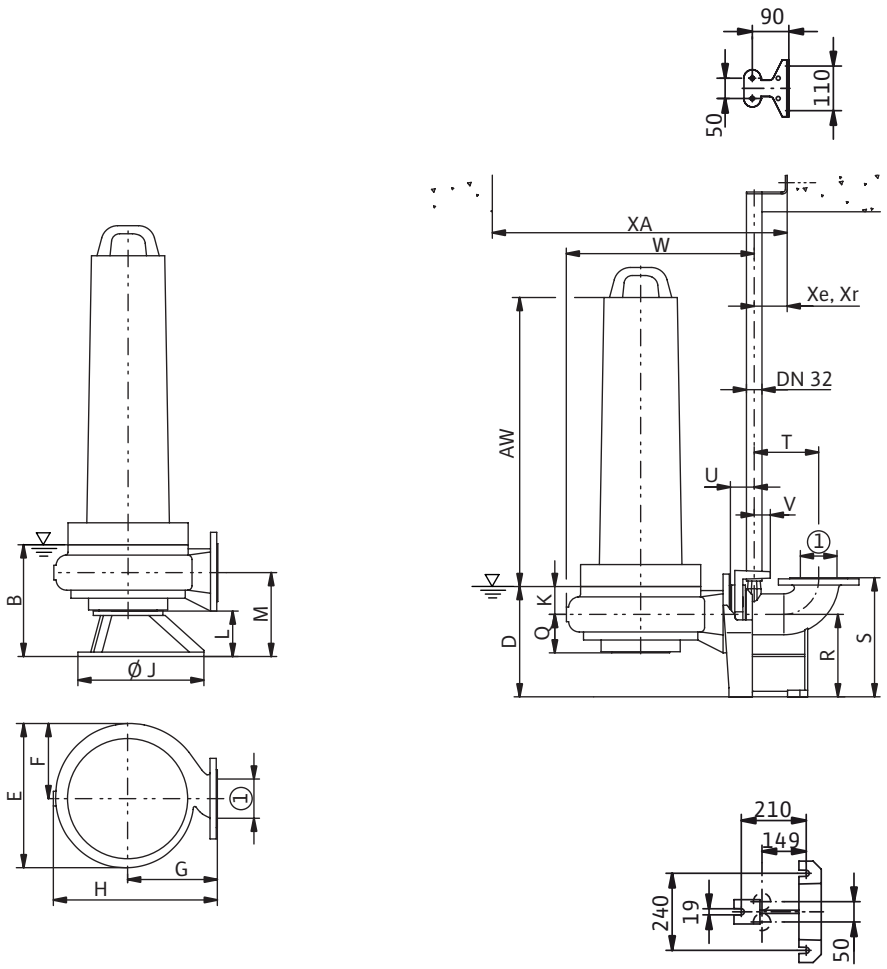

	B	D	E	F	G	H	J	K	L	M	Q	R	S	U	T	V	W	AW
UCA 415-26/10.0 T4	445	402	533	289	400	666	500	145	180	363	183	320	465	88	220	38	754	510
UCA 415-28/10.0 T4	445	402	533	289	400	666	500	145	180	363	183	320	465	88	220	38	754	510
UCA 415-30/15.0 T4	445	402	533	289	400	666	500	145	180	363	183	320	465	88	220	38	754	674
UCA 415-32/20.0 T4	445	402	533	289	400	666	500	145	180	363	183	320	465	88	220	38	754	674
UCA 415-34/25.0 T4	445	402	533	289	400	666	500	145	180	363	183	320	465	88	220	38	754	678

TECHNICAL DATA

	Curve	Out-of-water operation	Submerged operation	P1	P2	I	Speed	Mains voltage	IP	Cable	Mass	Particle size	Starting
	no			kW	kW	A	rpm			m	kg		
UCA415-26/10.0 T4	16	-	S1	12,2	10	21	1450	3~400V, 50Hz	68	15	237	80	Y - Δ
UCA415-28/10.0 T4	17	-	S1	12,2	10	21	1450	3~400V, 50Hz	68	15	237	80	Y - Δ
UCA415-30/15.0 T4	18	S2 - 15	S1	18,6	15,5	30	1450	3~400V, 50Hz	68	15	314	80	Y - Δ
UCB415-32/20.0 T4	19	S2 - 15	S1	24	20	41	1450	3~400V, 50Hz	68	15	328	80	Y - Δ
UCB415-34/25.0 T4	20	-	S1	28,5	25	49,5	1450	3~400V, 50Hz	68	15	379	80	Y - Δ

RECOMMENDED ACCESSORIES FOR FIXED INSTALLATION

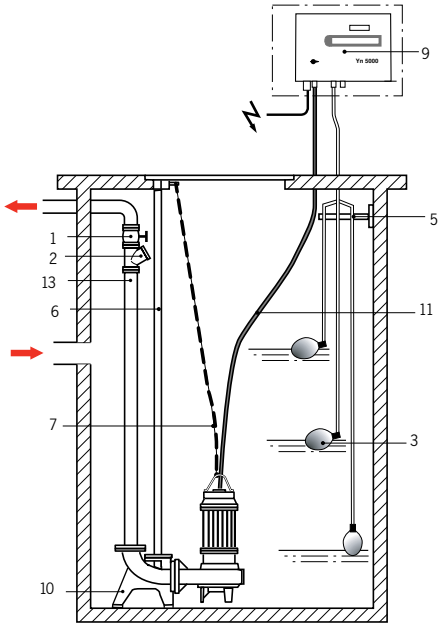

1 : Full-flow shut-off valve
2 : Ball-type non-return valve
3 : On-Off level controller
4 : IPAE electronic air-pressure switch level sensor
5 : Angle-bracket support kit for floats/
cable fastener for IPAE electronic air-pressure switch
6 : Guide bars
7 : Lifting chain
9 : Switch and protection box
10 : Base plate fixing kit
11 : Electric cable for motor
13 : Drain hole to create

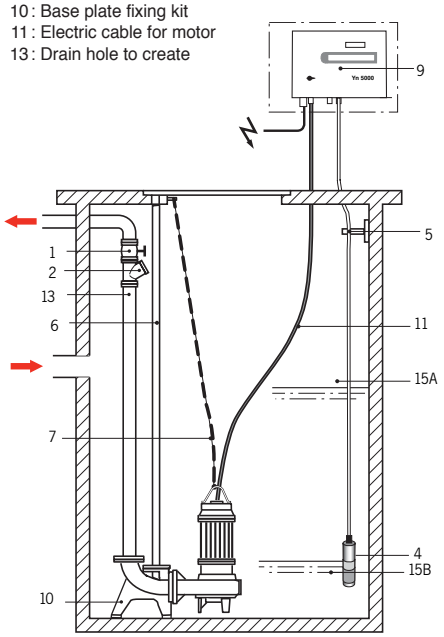

1 - Gate valves	
Gate valve DN 80	2017162
Gate valve DN100	2017163



2 - Non-return valve	
Ball-type non-return valve DN 80	4015761
Ball-type non-return valve DN 100	4015762



3, 5 - Float	
Nivo 430X1-10M	4027319
Nivo 430X1-20M	4027320
Angle-bracket support kit for floats	4013188



4, 5 - IPAE electronic air-pressure switch	
IPAE with 10 m of cable	2519921
IPAE with 30m of cable	2519922
IPAE with 50m of cable	2519923
Cable fastener for IPAE (5)	2519927
IPAE box, explosion-proof version (Zener barrier)	2521216



7 - Zinc-plated steel chain kit (chain + 2 shackles)	
5m, 8 mm thick (for pump exceeding 400 kg)	6060673
10 m, 8 mm thick (for pump exceeding 400 kg)	6060716



9 - Boxes				
Description	Max. curr. (A)	Voltage (V)	Freq. (Hz)	No. of controllable pumps
YN3112 T4	12	3~400	50/60	1
YN3212 T4	12	3~400	50/60	2
S-CTRL-SC-L-1x12A-T4-SD-WM-PKG	14	3~400	50/60	1
S-CTRL-SC-L-2x12A-T4-SD-WM-PKG	14	3~400	50/60	2
S-CTRL-SC-L-1x18A-T4-SD-WM-PKG	19	3~400	50/60	1
S-CTRL-SC-L-2x18A-T4-SD-WM-PKG	19	3~400	50/60	2
S-CTRL-SC-L-1x24A-T4-SD-WM-PKG	24	3~400	50/60	1
S-CTRL-SC-L-2x24A-T4-SD-WM-PKG	24	3~400	50/60	2
S-CTRL-SC-L-1x32A-T4-SD-WM-PKG	32	3~400	50/60	1
S-CTRL-SC-L-2x32A-T4-SD-WM-PKG	32	3~400	50/60	2
S-CTRL-SC-L-1x42A-T4-SD-WM-PKG	42	3~400	50/60	1
S-CTRL-SC-L-2x42A-T4-SD-WM-PKG	42	3~400	50/60	2
S-CTRL-SC-L-1x55A-T4-SD-WM-PKG	55	3~400	50/60	1
S-CTRL-SC-L-2x55A-T4-SD-WM-PKG	55	3~400	50/60	2
S-CTRL-SC-L-1x72A-T4-SD-WM-PKG	72	3~400	50/60	1
S-CTRL-SC-L-2x72A-T4-SD-WM-PKG	72	3~400	50/60	2

DOL: direct starting, TD: star/delta starting
TD: star/delta starting



10 - Base plate kits (without guide bar)	
Base plate for UCA DN 80	6022585
Base plate for UCA DN 100	2029053
Base plate for UCB 410	6022591
DN base plate for UCA 150	6036890



UVO-UCA-UCB

RECOMMENDED ACCESSORIES FOR MOBILE INSTALLATION

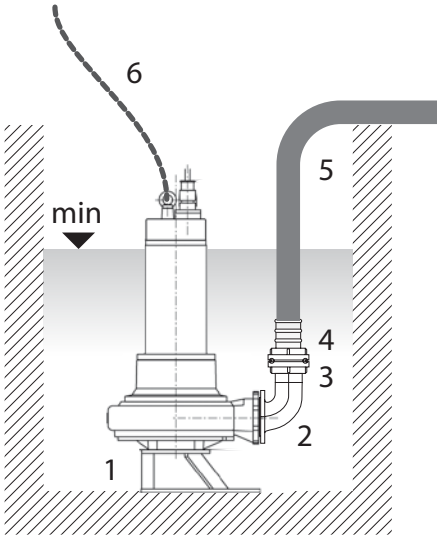

1 : Bracket for mobile installation
2 : Right-angled elbow
3 & 4 : Quick-fitting pipe union
5 : Flexible hose
6 : Lifting chain

1 - Bracket	
UCA 208	6001190
UVO 208	6020099
UCA 410	6031386
UCB 410/UCA 415	6024243

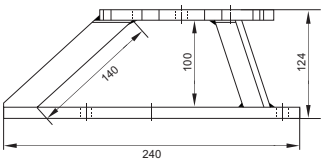

2 - Elbow	
Right-angled elbow DN 80	2017689
Right-angled elbow 100	2015592



3 et 4 - Quick-fitting pipe union	
3) DN 80	18275
4) DN 80	18269
3) DN 100	19792
4) DN 100	18276

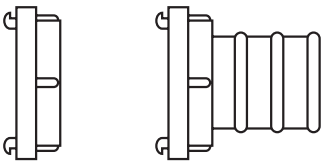

5 - Pipe	
10 m pipe DN80	2017691
20 m pipe DN80	2017692
30 m pipe DN80	2017693
10 m pipe DN100	2015585
20 m pipe DN100	2015586
30 m pipe DN100	2015587



6 - Zinc-plated steel chain kit (chain + 2 shackles)	
5 m, 8 mm thick (for pump exceeding 400 kg)	6060673
10 m, 8 mm thick (for pump exceeding 400 kg)	6060716



RECOMMENDED ACCESSORIES

• SC Lift

- Management of one or two pump(s) in a fixed installation: submerged sump or dry pit by microprocessor.
- Monitoring of level and protection of motor(s) from overcurrents, thermal overloads and dry running.



• IPAE

Electronic Air-Pressure Switch for clean and muddy water.



- Designed to operate in explosive atmospheres.
- Also operates on emptying and filling.
- Complies with the 94/9/EC Directive (ATEX): protection from explosive atmospheres.
- Remote control.
- Explosion-proof.
- Insensitive to water temperature and the presence of scum.
- Acid-resistant.
- Tamper-proof, extremely accurate: 2 cm and economical.
- Power supply voltage: 230 - 50Hz.
- Use with YN 5000E.

For an ATEX installation, use the Zener barrier (see IPAE instructions for further information).

• NIVO430

- Environmentally-friendly, mercury-free muddy water float switch.
- Operates on emptying and filling with slave switch.



• Adaptation flanges for Flygt base plates with screws and gasket

EMU DN80 / Flygt DN80	6030437
EMU DN100 / Flygt DN100	6030438
EMU DN150 / Flygt DN150	6030439
EMU DN80 / Flygt DN100	6030447
EMU DN100 / Flygt DN150	6030448

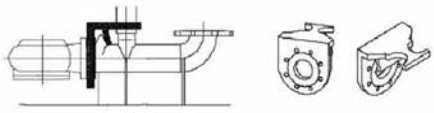

FEATURES

a) Electrical

- 400 V three-phase – 50 Hz direct starting for 208-12/3,7 T4 and 208-13/3,7 T4 models
- 400 V three-phase – 50Hz start-delta starting
- Mandatory thermal protection from overcurrents via switch and circuit-breaker or via switch and protection box.

b) Fitting

- pump in vertical position for fixed or mobile installation
- **mobile installation**: delivery port is connected by an elbow to a flexible hose of larger diameter than the pump delivery diameter.
- **Double installation**: I the pumps may be doubled up via a manifold
- Non-return valve and other valves to be fitted preferably in the upper part of the delivery conduit.
- Connection via a flexible hose or rigid pipe

c) Packaging

- Pump delivered on a pallet
- Pump supplied with H07RN-F electrical cables for the UCA, or NSSHöu-S for the UVO/UCB.
- Accessories packaged separately

UVO-UCA-UCB

NOTES

RANGE OF APPLICATION

Flows up to:	**16 m³/h**
Manometric head up to:	**38 m**
Temperature range of the liquid:	**+3° à +40°C**
DN outlet:	**40**
Protection class:	**68**

MINI SDL

SUBMERSIBLE MACERATING PUMPS

Lift-pump for muddy water
Commercial
2 pole – 50 Hz

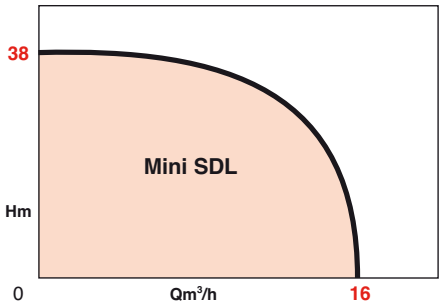

APPLICATIONS

- Lift-pump for waste water, sewage, water with fibrous particles, cloth etc.
- Emptying septic tanks and sewers.
- Lift-pump for canteen waste water.
- Non-corrosive waste from the food industry.

For housing, restaurants, garages, car parks etc. Anywhere with a high manometric head.

ADVANTAGES

- **The combination of two materials Cast iron + 316L stainless steel gives protection against corrosion and increased reliability.**
- **Blade with high strength and great hardness.**
- **Spherical blade to avoid friction and premature wear.**
- **Fixed blade with an ogive to channel the flow and of ensure better intake**
- **Two standard types of installation: fixed installation in a submerged sump and mobile installation.**
- **Connexions: Flange, nominal diameter 40, nominal press. 10, Internal threaded R1$^{1/2}$**
- **Reduced diameter piping means higher head and evacuation over longer distances.**



• MINI-SDL

MINI SDL

DESIGN

• Hydraulic part:

- Submersible, vertical axis.
- Shaft common to pump and motor.
- intermediate chamber between pump and motor filled with oil, isolated by a mechanical seal on the pumped fluid side and a lip seal on the motor side
- A single-vane impeller on which the moving blade is fixed
- Fixed blade fitted with an ogive mounted on pump housing
- Particle size 6 mm

• Motor :

- Water-tight dry rotor
- Built-in thermal sensor protecting the motor against any overheating.
- WSK thermal sensor
- Direct starting
- Speed: 2900 rpm
- Winding: ~1 ; 230V
  ~3 ; 400V
- Frequency: 50 HZ
- Classe d'isolation: 155 (F)
- Insulation class: IP 68
- EC compliant
- **ATEX for ~3 versions.**

BASIC CONSTRUCTION

Main components	Material
Hydraulics	EN-GJL 250
Motor housing	1.4404
Impeller	EN-GJL 200
Shaft	1.0570
Water-seal fluid side	Carbide / Cér.
Water-seal motor side	NBR
Blades	1.4528

CHARACTERISTICS

- Hydraulics in cast iron + stainless steel 316 L Motor + blades in cast stainless steel
- 10 m detachable cable
- Single-vane impeller
- Installation on base plate with Ø33/42 guide bars or stainless steel legs for mobile installation.
- Explosion-proof as standard on the three-phase version

IDENTIFICATION

Mini S DL 2 04 2,0 T4
M

S : code range
DL : Macerating impeller
2 pole
nominal diameter of outlet in cm
P2 in KW
T4 : 3~ 400 V
M : 1~ 230 V

HYDRAULIC PERFORMANCE AT 2900 RPM

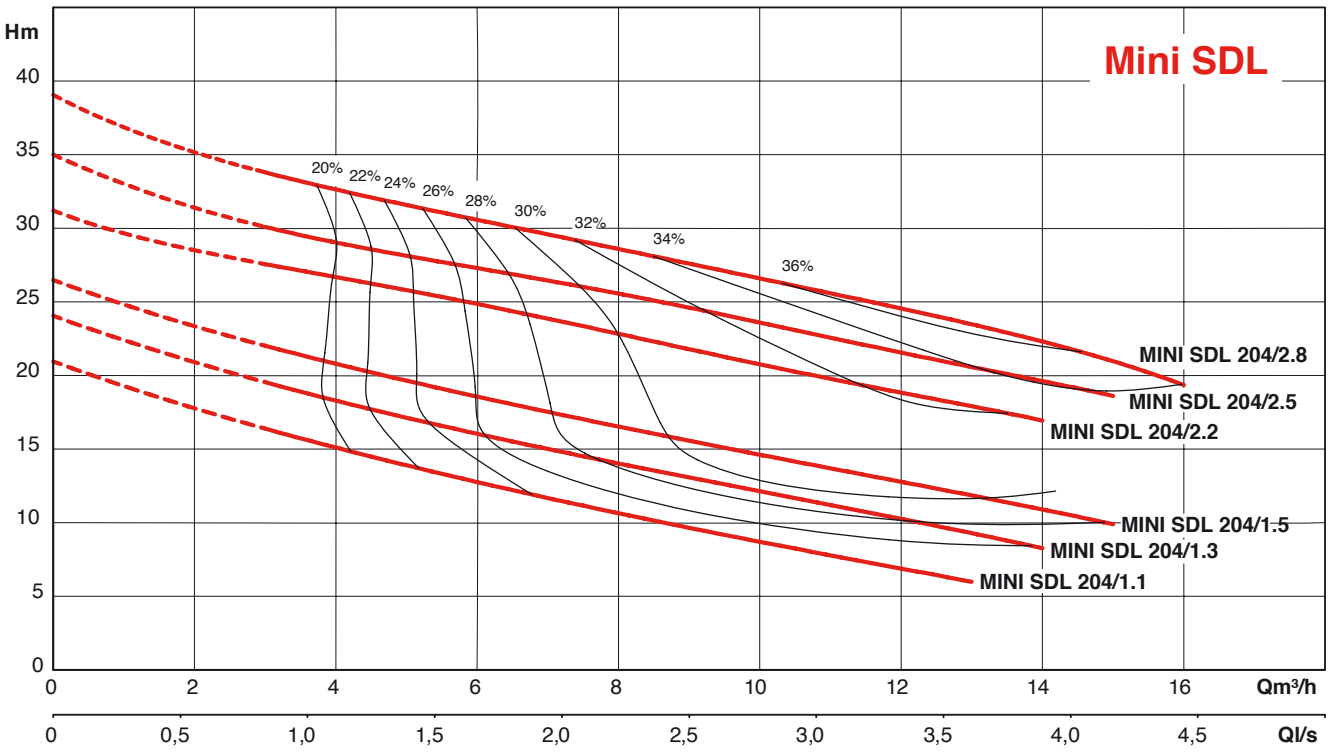

CROSS SECTION

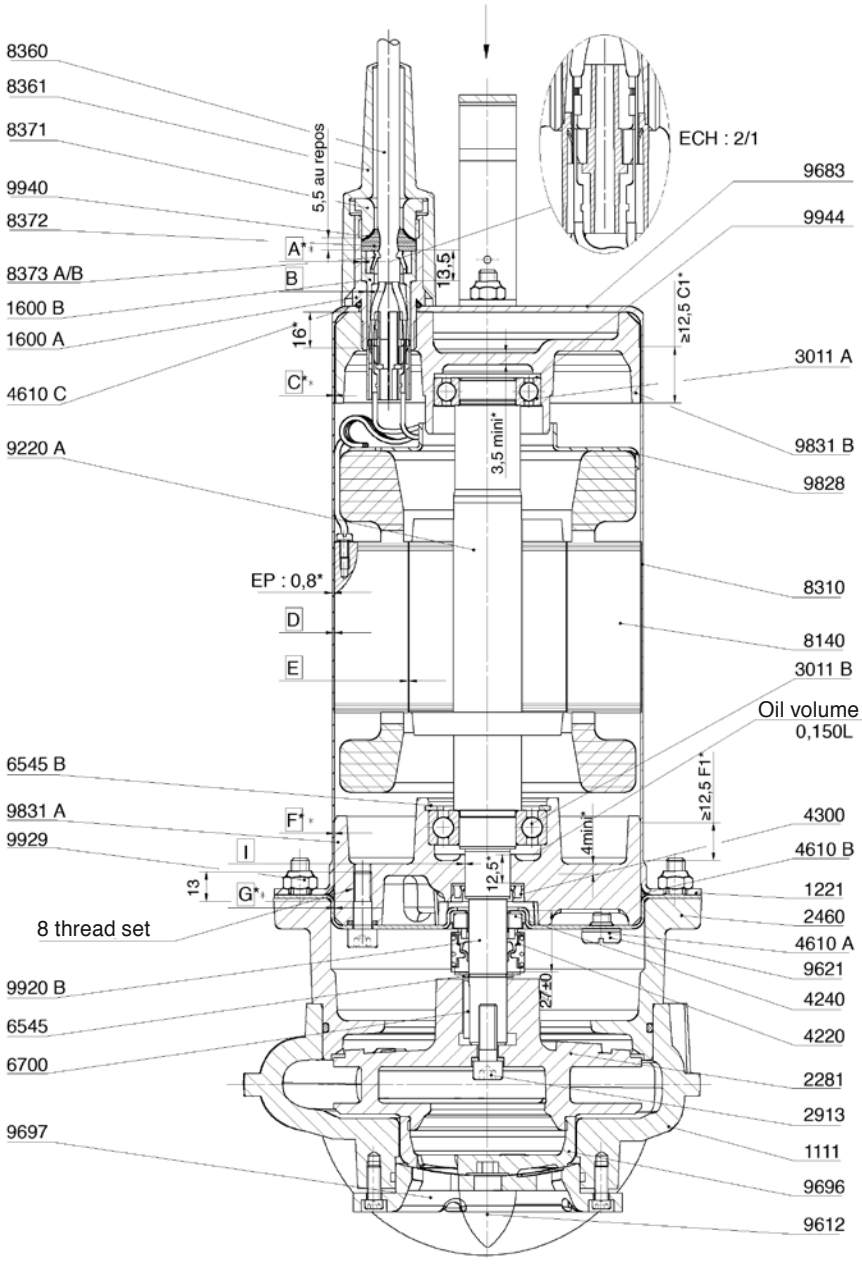

1111 - Pump casing
1221 - Motor casing
1600 A - Stuffing-box bushing
1600 B - Contact support
2281 - Closed single-channel impeller
2460 - Motor adjustment flange
2913 - Impeller attachment screw
3011A - Upper bearing
3011B - Lower bearing
4220 - Mechanical-seal: fixed part
4240 - Mechanical-seal: rotating part
4300 - Watertight lip seal
4610 A - O-ring joint (cap 9621)
4610B - O-ring joint (casing)
4610C - O-ring joint (sleeve 8361)
6545 - Support circlips
6700 - Key
8140 - Stator
8310 - Outside motor casing
8360 - 10-m power cable
8361 - Power-cable sleeve
8371 - Stuffing-box nut
8372 - Stuffing-box joint
8373 A - Cable tightening cone
8373 B - Anchor ring
9220 - Impeller shaft
9612 - Plug
9621 - Oil-chamber cap
9683 - Pump plate
9696 - Mobile blade
9697 - Permanent blade
9828 - Stator mount
9831A - Lower level
9831B - Upper level
9929 - Motor-casing Nylstop nut
9940 - Stuffing-box washer
9944 - Elastic washer

MINI SDL

DIMENSIONS

• **Fixed installation**

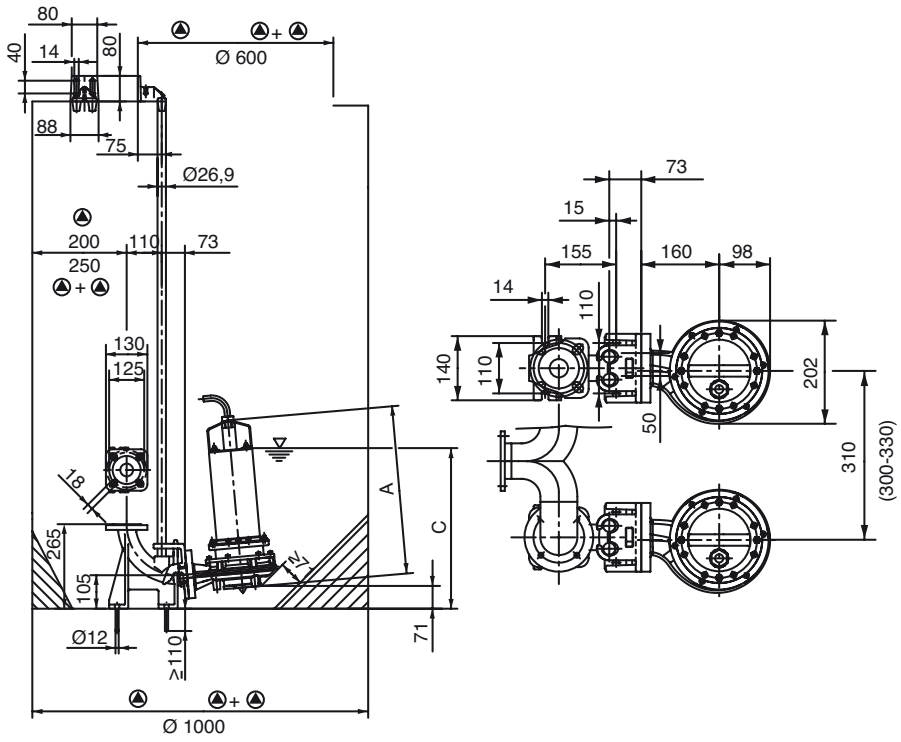

• **Mobile installation**

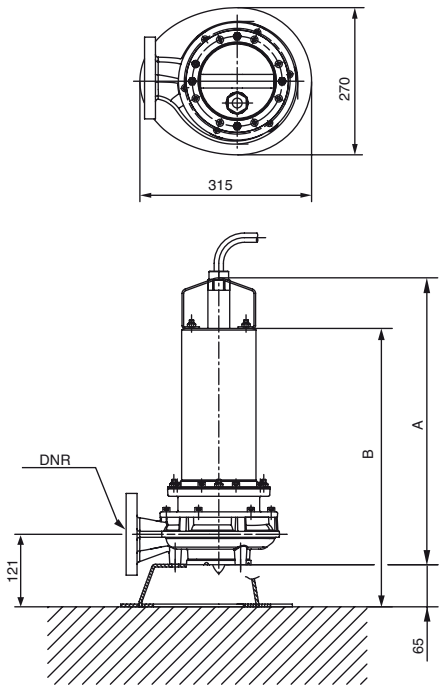

Order reference	P2	P1	I (A)	I (A)	A	B	C	Opening	
	KW	KW	1x230V	3x400V	mm	mm	mm	DNR	Kg
MINI SDL 204/1,1M	1	1,3	8	-	498,5	463,5	469,5	Rp 1¼ / DN40	30
MINI SDL 204/1,3M	1,2	1,6	8,7	-	498,5	463,5	469,5	Rp 1¼ / DN40	30
MINI SDL 204/1,5M	1,5	1,9	9,5	-	498,5	463,5	469,5	Rp 1¼ / DN40	30
MINI SDL 204/1,1T4	1	1,2	-	2,5	498,5	463,5	469,5	Rp 1¼ / DN40	30
MINI SDL 204/1,3T4	1,2	1,45	-	2,8	498,5	463,5	469,5	Rp 1¼ / DN40	30
MINI SDL 204/1,5T4	1,5	1,7	-	3,2	498,5	463,5	469,5	Rp 1¼ / DN40	30
MINI SDL 204/2,2T4	2,1	2,6	-	5,3	518,5	483,5	489,5	DN40	39,4
MINI SDL 204/2,5T4	2,3	2,8	-	5,8	518,5	483,5	489,5	DN40	39,4
MINI SDL 204/2,8T4	2,5	3	-	6	518,5	483,5	489,5	DN40	39,4

ACCESSORIES RECOMMENDED FOR FIXED AND ATEX INSTALLATION (IPAE)

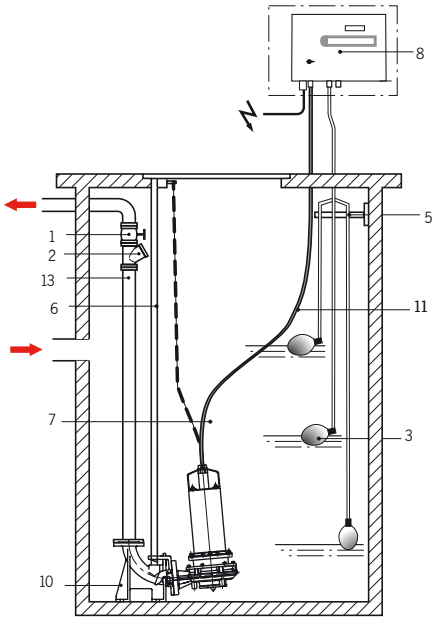

1: Shut-off valve with full flow
2: Non-return ball valve
3: On/off float switch
4: EAPS air pressure switch
5: Bracket kit to support floats / cable attachment for OPAE
6: Guide bars nominal diameter 3/4”
7: Chain of lift-pump
8: Control and protection box
10: Kit for base plate
11: Electric motor cable
13: Drain hole to be drilled
14: Zener barrier, essential for an ATEX installation

Reminder: pumps with 3~phase references are ATEX

1 - Gate valves	
Shut-off valve	4015489

2 - Non-return valve	
Non-return valve	4015759

4, 5 & 14 - IPAE	
IPAE with 10 m of cable	2519921
IPAE with 30m of cable	2519922
IPAE with 50m of cable	2519923
Cable attachment for IPAE	2519927
IPAE box version ADF (Zener barrier)	2521216
Bracket kit to support floats	4013188

7 - Chain of lift-pump	
Chain of lift-pump (10m)	6060716

10 - Base plate kit	
Base plate kit mini-SDL	2057179

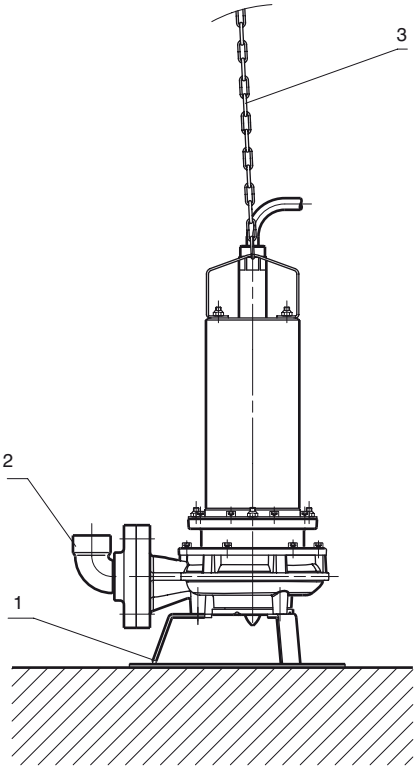

1 : Support for mobile installation
2 : 90° elbow
3 : Chain of lift-pump

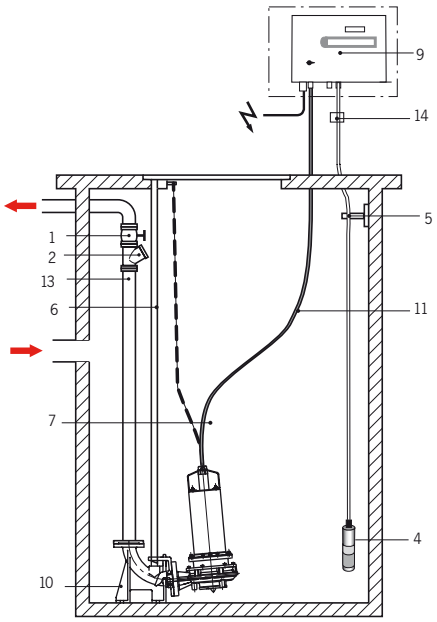

For an ATEX installation, use IPAE box version ADF (Zener barrier) .



1 - Support	
Support for Mobile Installation	2058721

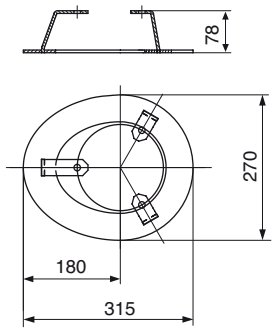

2 - Nominal 40mm diameter elbow with flange	
Output elbow	2057401

3 - Chain of lift-pump	
Chain of lift-pump	6060673

MINI SDL

CONTROL SYSTEMS

Electronic control and protection boxes

Models	YN 3000	YN 7000	MS Lift
			
Application	For controlling levels in a sump by an IPAE sensor (not provided)	For running a submersible pump, lift-pump or pressure booster.	For controlling levels in a fixed installation, dry sump or dry pit type
Number of pumps			
1 pump	YN3100	YN7100	1x4kW
2 pumps	YN3200	-	2x4kW
Characteristics			
1x230V	yes	yes	yes
3x230V	no	yes	no
3x400V	yes	yes	yes
Max. power per pump	4Kw	11Kw	4Kw
Intensity			
Single phase	0,3 to 12A	1 to 23A	1,5 to 12A
Three-phase	0,3 to 10A	1 to 23A	1,5 to 12A
Frequency	50/60Hz	50/60Hz	50/60Hz
Protection class	IP65	IP54	IP54
Level detectors			
Float switch	yes	yes	yes
1 pump	3	1 ou 2	2
2 pumps	4	no	3
IPAE Sensor	yes	-	-
Level electrode	-	2 provided	-

Level detectors		TYPE OF INSTALLATION			Length of cable
		Deep sump installation	**Transportable installation**	**Fixed installation**	in metre
Governed by level electrodes		**Recommended**	Incompatible	Possible	solde in mètre
Muddy water: Float switch Euroflot 430	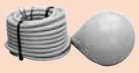	Incompatible	Possible	Possible	10 ou 20
Governed by IPAE piezometric sensor		Possible	Possible	**Recommended**	10 ou 30

FEATURES

a) Electrical

- 3~ 400V – 50Hz direct starting

- Thermal protection against overcurrent essential, by slave switch or circuit-breaker or control box with water-level controller.

b) Mounting

- pump in vertical position for fixed or mobile installation
- mobile installation: the outlet port is connected by an elbow to flexible pipework with a diameter greater than the pump outlet.
- Double installation: the pumps can be linked together by pipe
- Non-return valve and valves to be fitted preferably in the upper part of the outlet pipe.
- Connection by hose or rigid pipework

c) Packaging

- Pump delivered in a recyclable cardboard box
- Pump delivered with electric cables H07RN – F (10 m)
- Accessories wrapped separately

OTHER ACCESSORIES

• **Alarmson**, overflow or low water audible alarm control box for clean water and muddy water (réf. 2529590)

• ALARMSON



OPERATING RANGES

Flow rates of up to:	**9 m³/h**
Manometric heads of up to:	**8 m CE**
Water temperature:	**+ 35°C***
Maximum particle size:	**10 mm**

* 90°C for intermittent operation and for 3 minutes.

SUBSANIT-2

LIFT PUMP MODULE FOR DOMESTIC WASTEWATER
50 Hz

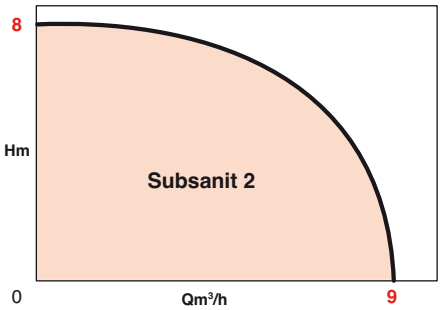

APPLICATIONS

Lift-pumping of domestic wastewater from:
- Wash basins.
- Washing machines.
- Shower cubicles.

Lift-pumping of wastewater not containing fats or fibrous materials.
Not suitable for use with muddy water or faeces from toilets (see Sanitson Premium).

Ideal for installing additional showers in basements.

BENEFITS

- **As easy to install as a washing machine.**
- **Opaque tank for a more attractive appearance.**
- **Lift-pumping to the sewer line in compete safety.**
- **Non-return mechanism built into the discharge.**
- **Component parts made from corrosion-resistant materials.**
- **Easily removable connectors.**
- **Quiet operation.**
- **Large effective volume (15 L): requires fewer pump starts.**
- **Fully automatic and maintenance-free operation.**
- **Corrosive water version available on request.**



• SUBSANIT-2



• SUBSON20-MF



• Integrated non-return valve



• SHOWER KIT: only required if the shower base is ≤ 270 mm above the floor level.

SUBSANIT-2

DESIGN

Lift pump module featuring:

- 32.5 L tank, with leaktight lid and closing clamps
- SUBSON-20MF submersible pump – 230 V single-phase, permanent capacitor motor with integral thermal protection - including an electrical cable and 2-pin + earth plug. Automatic operation via float switch;

Add a switch and low-water protection box for both single-phase and three-phase versions.

- Three connectors for:
  - wastewater discharge
  - adapting to a shower cubicle
  - washing machine
- two gaskets: for vent and wash basin ports
- stopper for shower adapter port.

BASIC CONSTRUCTION

Main parts	Material
Tank	Polyethylene
Pump cover + Base suct.	Polypropylene 30% FG
Impeller	Noryl
Fastenings	AISI 304

DESCRIPTION OF MODULE

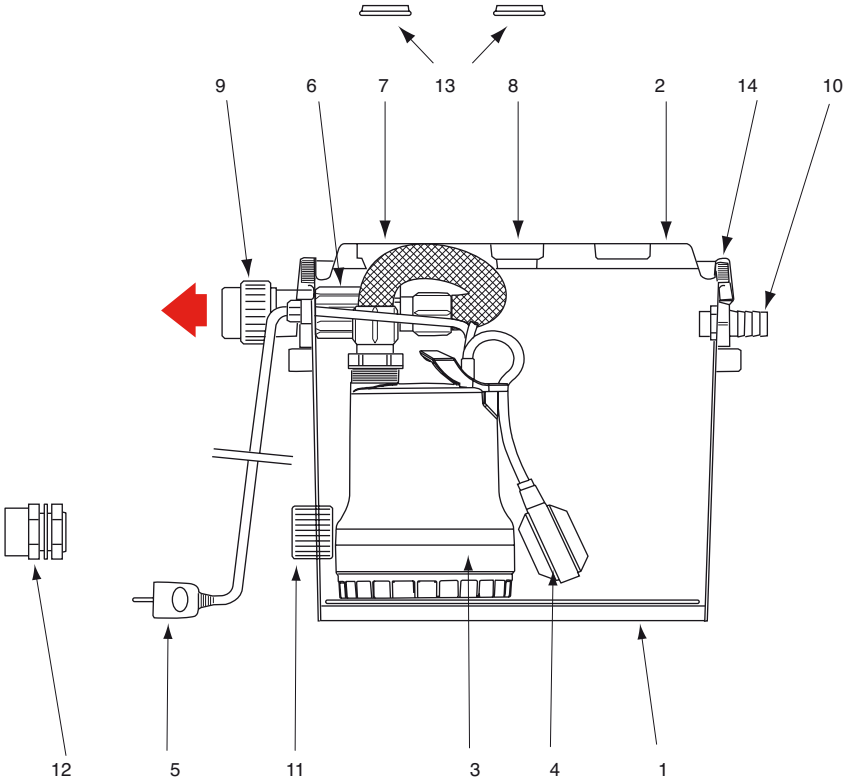

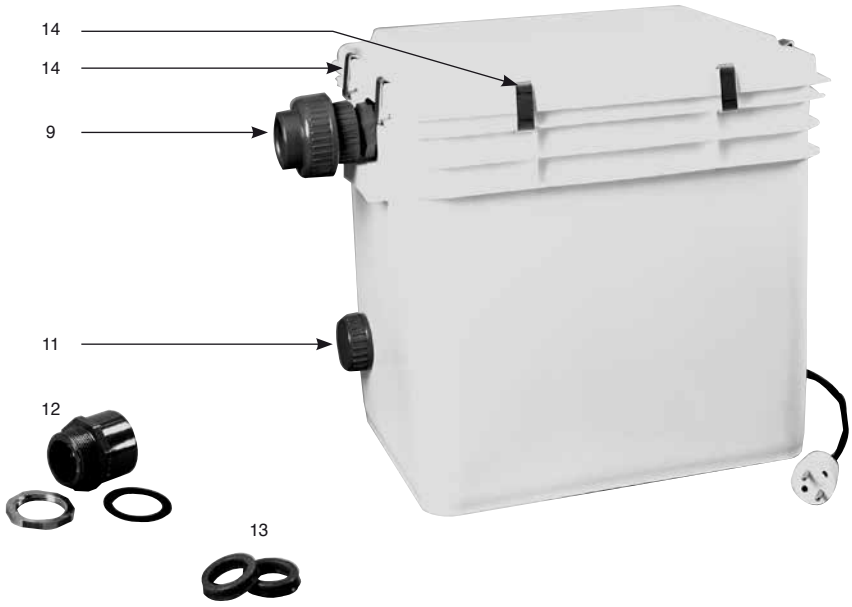

1 - 32.5 litre tank.
2 - Lid with O-ring seal.
3 - SUBSON-20MF submersible pump.
4 - Float switch.
5 - 2.5 m long electrical cable with standardised 2-pin + earth plug.
6 - Integrated non-return valve
7 - Port for fresh air vent.
8 - Wash basin connection port.
9 - Rotating union for wastewater discharge.
10 - Hose barb connector for washing machine.
11 - Stopper for shower cubicle port.
12 - Shower cubicle adapter connector (supplied unfitted).
13 - Gaskets for vent and washbasin ports.
14 - Lid closing clamps.

SCHEMATIC INSTALLATION DIAGRAM

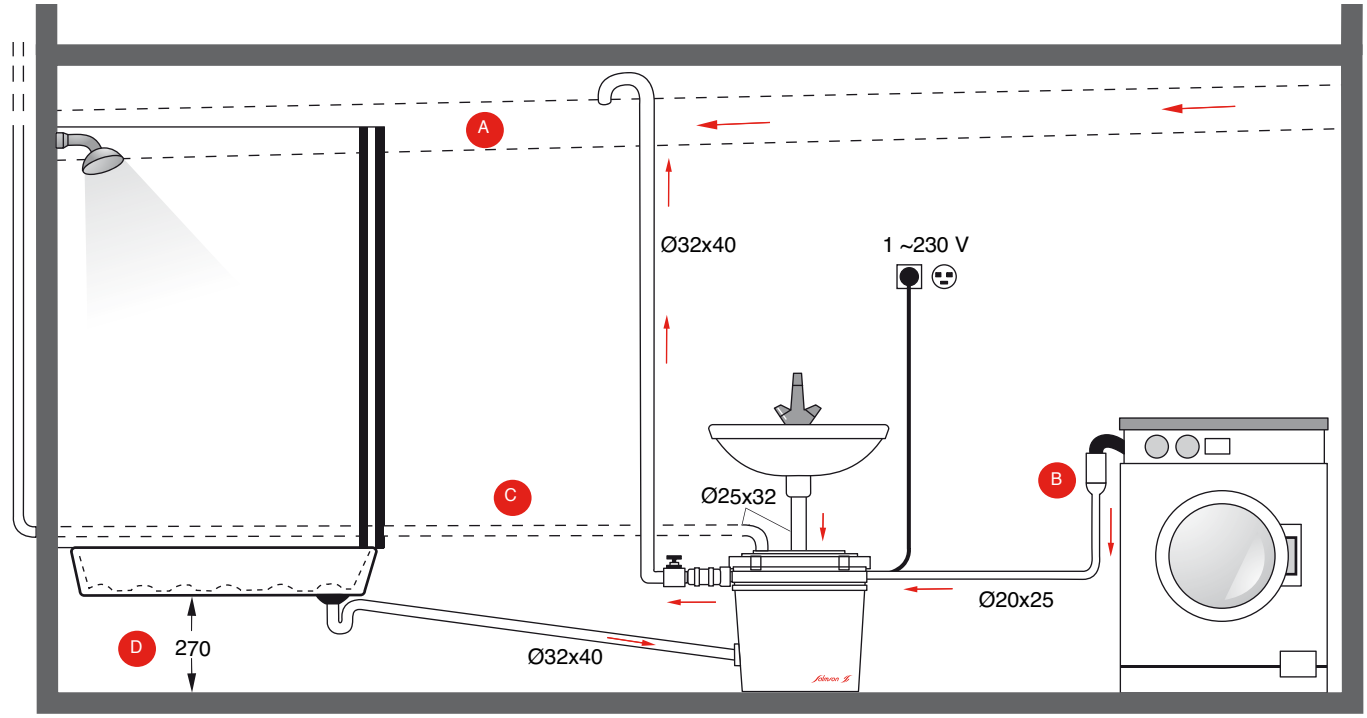

A - The SUBSANIT-2 discharge line must be connected to the top of the sewer line, forming a loop (see above).
B - The minimum height of the washing machine emptying pipe must conform to the requirement stated in the machine instructions.
C - The SUBSANIT-2 fresh air vent must be directed outside.
D - Minimum height = 270 mm. If the connection from the shower cubicle to the SUBSANIT-2 is ≤ 270 mm above the floor level, install the shower kit (very low control level = 80 mm, preventing water from flowing back into the shower).

NB
It is essential to provide a minimum slope of 2.5 cm/m for the length of pipework between the shower and the SUBSANIT.

HYDRAULIC PERFORMANCE

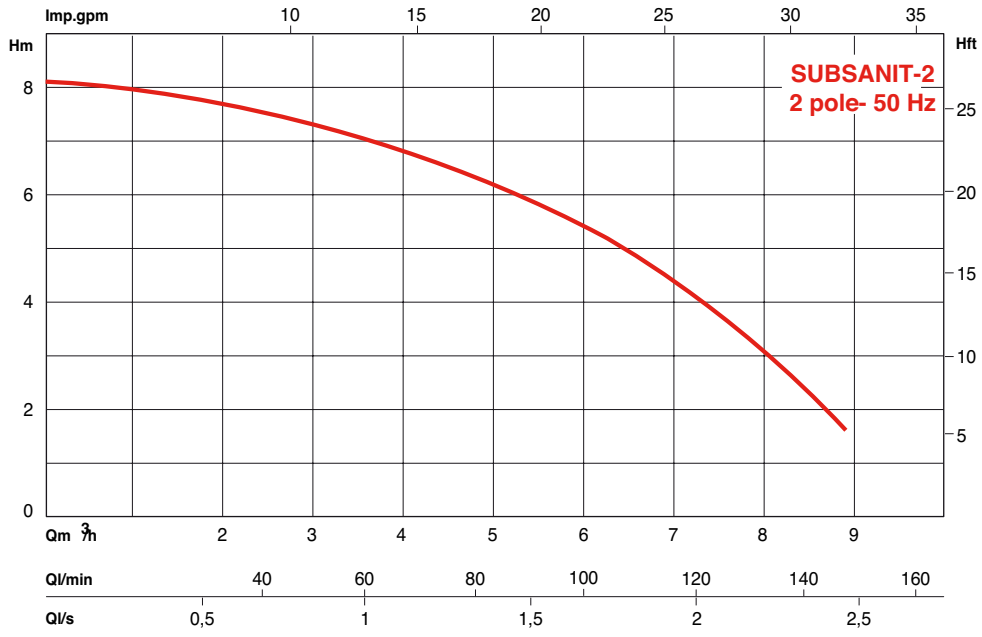

SUBSANIT-2

ELECTRICAL AND DIMENSIONAL SPECIFICATIONS

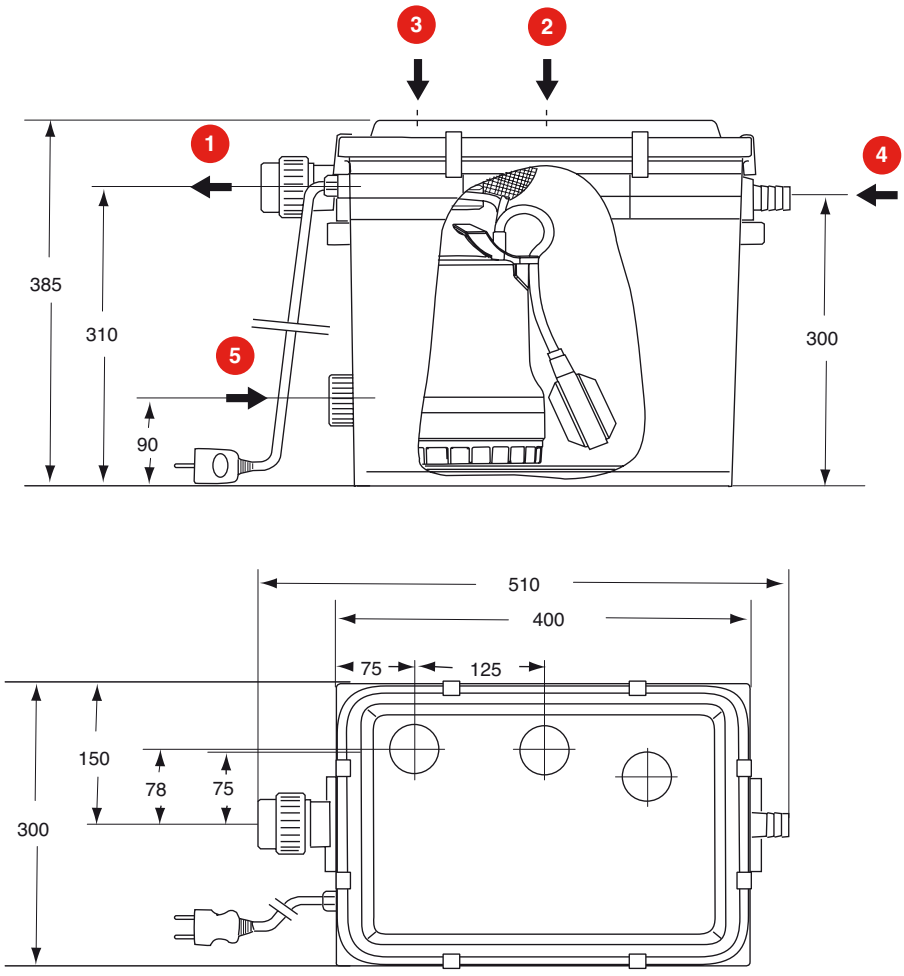

• **SUBSANIT-2**

2-pole motor			Diameter of ports to be connected				Weight
P2n	P1	Nom. current	Wastewater discharge	Washbasin vent	Washing machine	Shower	Approx.
W	W	A	1	2 3	4	5	Kg
370	450	2,1	DN 40	DN 32	DN 25 (hose barb)	DN 40	8

N.B. : the connections to ports 2 and 3 (washbasin and vent) may be reversed.

FEATURES

a) Electrical

- 230 V - 50 Hz single-phase with capacitor built into the motor.
- Motor protection is not essential (integral thermal protection).

b) Fitting

- Module to be placed on the floor.
- Connection to the sewer line by rigid PVC DN 32 pipework.
- The vent pipework (to the outside air) must conform to the hygiene regulations in force.

c) Packaging

- Supplied complete, packaged in a cardboard box.

d) Maintenance

- Repair or complete exchange of the pump components (please contact us for spare parts kits).

ACCESSORIES

- Wastewater discharge shut-off valve.

- SUBSANIT-2-SHOWER KIT Ref. 4053182
For shower applications when the connection distance from the floor to the base of the shower cubicle is ≤ 270 mm.

LIFTSON-S

LIFTING MODULES
Domestic wastewater
50 Hz
Compliant with standard
12050-1

OPERATING LIMITS

Flows rates up to :	**55 m³/h**
Heads up to :	**6,5 m**
Max. water temperature :	**+ 35°C**
Particle size :	**40 mm**
Manifold inlet :	**DN 100**
Shower inlet... :	**DN 40**
Discharge :	**DN 80/100**
Vent :	**DN≤70**

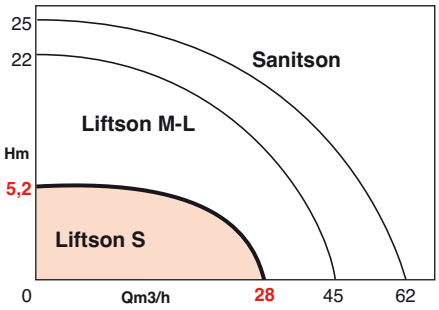

APPLICATIONS

Lifting of household wastewater and valve water whenever the evacuation level is below the sewer or the collection point is at a distance from it :

- Washrooms, showers, toilets, washing machines and small installations :
  - Houses,
  - Stadiums,
  - Sports complexes,
  - Laboratories.
- An ideal module for a bathroom or extra toilets in a basement.

ADVANTAGES

- **Fully corrosion-resistant product.**
- **Highly compact: designed for easy fitting in a ventilation space, behind a wall, between a partition and a false partition, under a staircase, etc ...**
- **Complete product allowing the equipping of a bathroom with multiple direct connections (toilet, sink and shower), the connecting of a backup hand pump and a boiler room sump pump.**
- **Direct accessibility to all the module's functions without intervention in the tank: all the units are visible.**
- **Preset level sensor.**
- **Alarm sensor ready for connection.**
- **Easy installation and maintenance.**
- **Compliant with standard 12050-1**



• **LIFTSON S, single-phase version.**
Capacitor plug and flexible discharge connection sleeve provided.



• **Vortex impeller**



• **LIFTSON S** installed between a wall and a partition.
Direct connections: shower, toilet, sink.



• **LIFTSON S** installed behind a wall.
Direct connections: toilet, sink.

LIFTSON-S

DESIGN

• Lifting module comprising :

- A 45L composite material single-piece tank Useful volume: 29L with 250 mm hole and 20 L with 180 mm hole.

Pump

pump body built into the tank, “vortex” impeller and 40mm free passage. Double sealing of the oil chamber.

Motor

- 4 poles, 316 stainless steel sleeve.
- 1,1 kW, single-phase and three-phase versions equipped with temperature probes.

In single phase as in three-phase a control and protection box is essential against lack of water.

Winding :	single-phase 230V 3-phase 400V
Frequency :	50 Hz
Protection index :	IP 67

- Modules designed for intermittent automatic operation.
- 1.1M and 1.1T4 models : supplied complete with capacitor plug and standardized site plug respectively.
- Resetting thermal protection.
- Model 1.1T4-NP supplied with bare cable. Indispensable control unit (for an extra cost).

STANDARD CONSTRUCTION

Main parts	Materials
Tank :	MD polyethylene
Vortex impeller :	MD polyethylene
Shaft :	Steel on motor side 316L steel on pumped fluid side
Mechanical seal :	Si Carbide/Si Carbide/Nitrile
Motor flange:	304 stainless steel
Fastenings :	304 stainless steel

DESCRIPTION OF MODULE (Model shown: Single-phase)

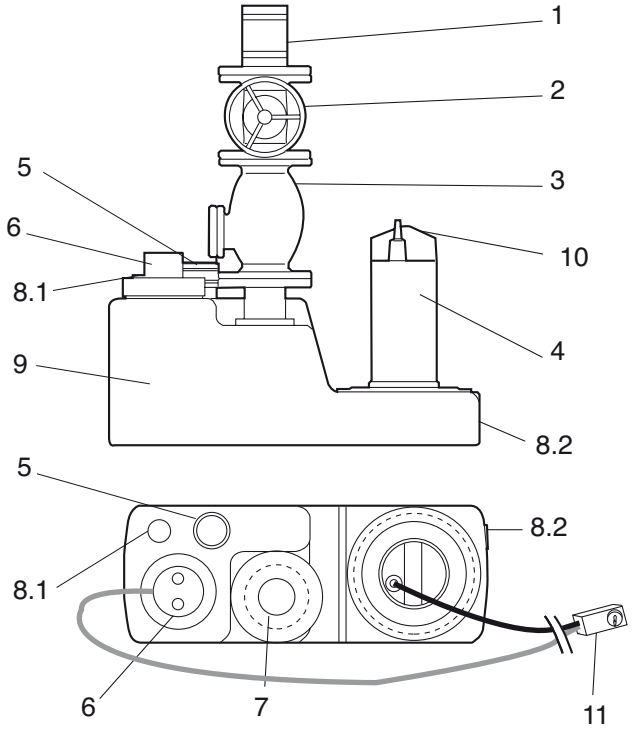

1 – Connection hose with flange – ND 80 (provided).
2 – Full flow isolation valve – ND 80 (optional).
3 – Ball check valve – ND 80/100 (optional).
4 – Pump motor.
05 – Vent coupling – ND = 70.
06 – Level sensor unit (serviceable).
07 – Discharge – ND 80/100.
08 – ND 40 connections.
09 – Medium density polyethylene tank.
10 – Handle.
11 – Capacitor plug.

HYDRAULIC PERFORMANCES AT 1450 RPM

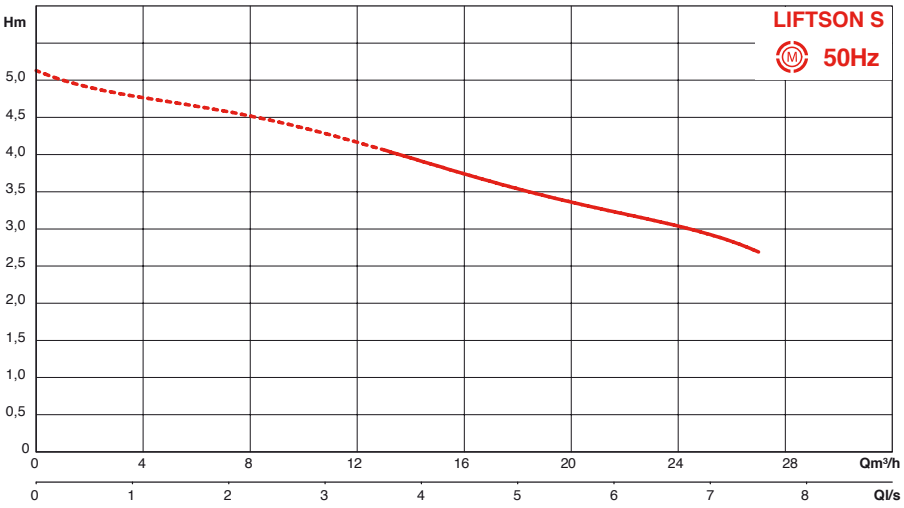

INSTALLATION DIAGRAMS – HYDRAULIC CONNECTIONS

• Installation with wastewater/valve water connection: ND 100

Backup hand pump and sump pump connections: ND 40

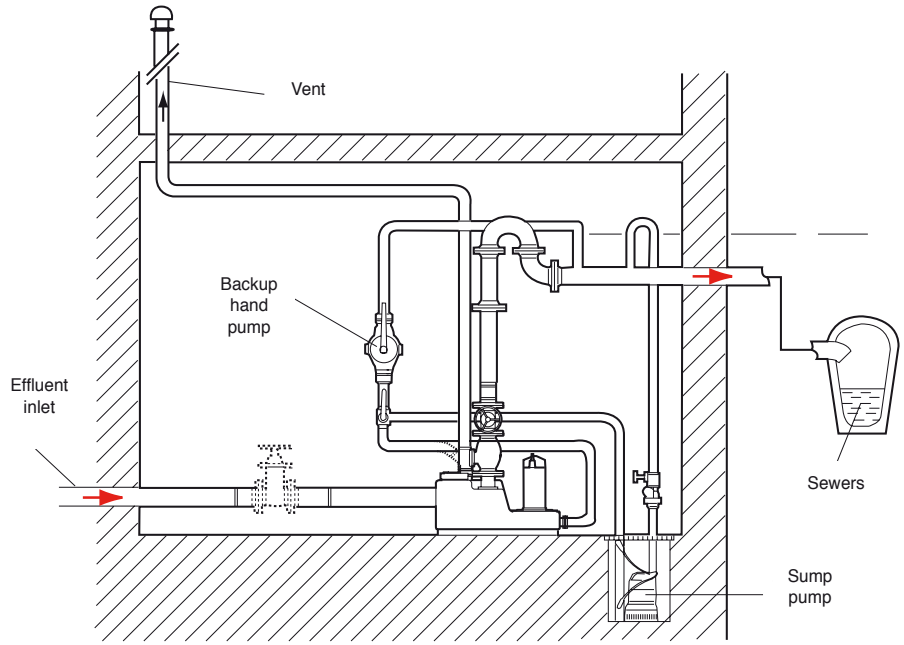

All the hydraulic connections to the LIFTSON S must be made using a flexible sleeve.

Shower inlet:	ND 40
Bath inlet:	ND 40
Sink inlet:	ND 40
Washing machine inlet:	ND 40
Toilet inlet:	ND 80/100
Manifold inlet:	ND 100

• Installation* with direct wastewater/valve water connection

LIFTSON S fitted between a wall and a partition

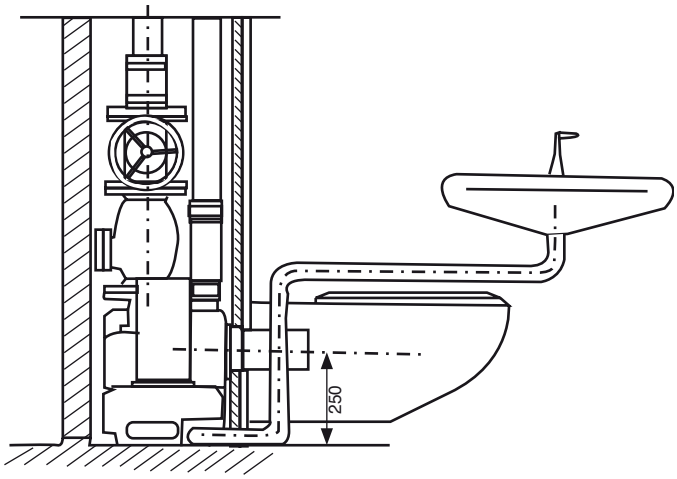

* Inspection hatch required

• Installation with direct valve water connection

LIFTSON S fitted between a wall and a partition

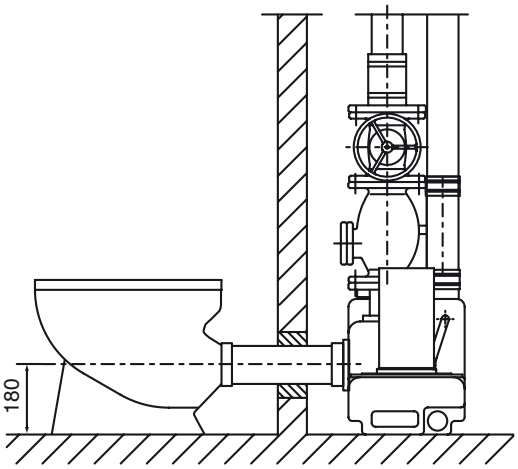

LIFTSON-S

ELECTRICAL DATA AND DIMENSIONS

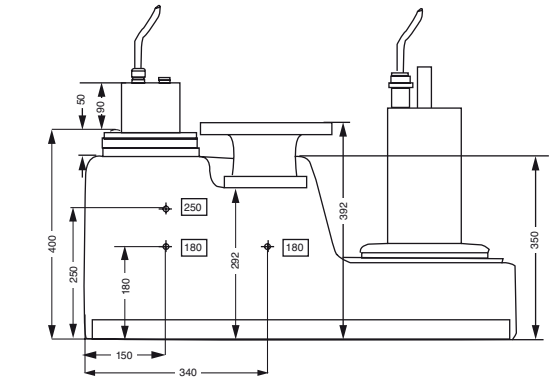

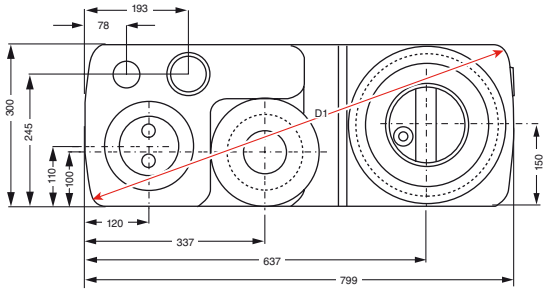

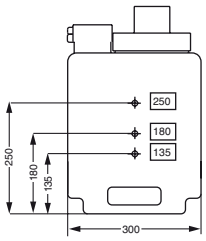

Orifices

Effluent discharge	ND80/100
Vent	ND ≤ 70
Manifold inlet:	ND 100
Toilet inlet	ND 80
Direct shower inlet, etc.	ND 40*

* Choice of orifice, in the upper or lower section.

ORDER REFERENCE	supply current	total power capacity	intensity requirement in A		passage cross-section	mass	D1
	V	kW	1 x 230 V	3 x 400 V	mm	kg	mm
LIFTSON S 1.1M	1 x 230	1,1	7,5	–	40	30	853
LIFTSON S 1.1T4	3 x 400	1,1	–	3	40	30	853
LIFTSON S 1.1T4-NP	3 x 400	1,1	–	3	40	30	853

ACCESSOIRES

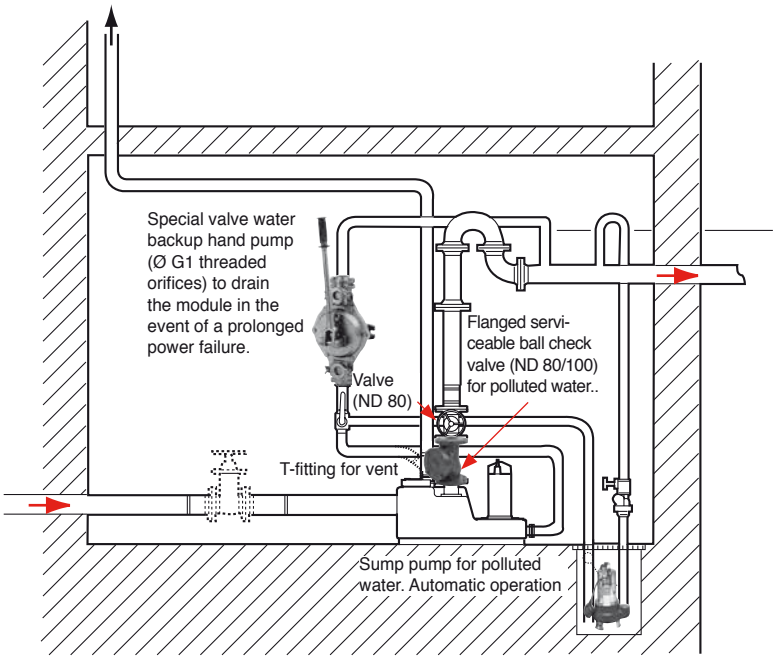

FEATURES

a) Electrical

- 230 V (M) - 50 Hz single-phase, with capacitor plug.
- 400V - 50 Hz three-phase with neutral conductor (T4), with standardized site plug or bare cable NP version (in this case, the control box (ref: 2515154) is indispensable).

b) Assembly

- The pipes must be supported and secured so that no stress is put on the tank.
- All the hydraulic connections to the LIFTSON S must be made via flexible hose.
- The connection to the discharge must be made using the flexible sleeve provided.
- The hole for the effluent inlet orifice must be made on site.
- The backup hand pump must be accessible and preferably connected in the lower section of the tank (designed for ND 40 orifice).

Recommendation

A special polluted water ball check valve should be fitted on the pump's discharge pipe, to prevent any risk of the water returning, and an isolation valve.

c) Packaging

- Cardboard packaging.

Module supplied with ND 100 inlet seal, 3 strips of anti-vibration foam, a tank drilling tool, 2 mounting legs for the tank, plus screws to fasten the legs to the ground, and a flexible discharge connection sleeve.

d) Maintenance

- Replacing the mechanical seals, checking the condition of the sensor pressure measuring tubes.

RECOMMENDED ACCESSORIES

- Overflow audible alarm :

ALARMSON, ref. : 4051111 ; ALARMSON-S (with safety battery), réf. : 4051114, to be connected to the alarm sensor.

- ND 80/100 ball check valve, ref. : 04617/04618.
- ND 80/100 valves, ref. : 2019391/2015582.
- Control box for "T4-NP" model (mandatory accessory) : COF-LIFTSON-S 1.1T4-NP, ref. : 2515154.
- Hand pump :

POMPMAIN, ref. : 019439 ou,
KITPOMPMAIN, ref. : 065959.

- PVC piping.
- T-fitting for vent (not provided by SALMSON).
- Cellar drainage pump.

RANGE OF APPLICATION

Flows up to:	**40 m³/h**
Manometric head up to:	**22 m**
Maximum water temperature:	**+ 3 à 40°C**
Particle size:	**45 mm**
Inlet pipe:	**DN 40/50/100/150**
Outlet:	**DN 80**
Vent:	**DN 70**

LIFTSON M-LIX L

LIFT-PUMP MODULES
Domestic waste water
50 Hz
Complies with standard
EN 12050-1

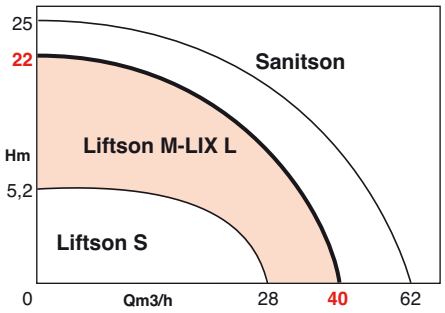

APPLICATIONS

Individual homes:
Raising waste water and sewage, wherever the level of the waste pipe is lower than the sewer.
Multiple dwellings, restaurants, industries.

Raising muddy waste water from:
Raising muddy waste water from:
- WCs, toilet blocks
- Kitchens, with a compulsory grease trap
- Showers.

For multiple dwellings: the two-pump Liftson.

ADVANTAGES

- **Easy to install. Ready to pump**
- **Two mechanical seals for an higher security**
- **Great flexibility of installation**
- **Direct access to all the functions**
- **Totally corrosion proof**
- **Complies with standard EN 12050-1**

CHARACTERISTICS

- Light and compact
- Non-return valve built into the outlet (except for single-pump model M)
- Built-in float switch
- Delivered with control box
- Option of multiple direct connections to the tank such as inlets or a hand pump)
- Bottom of the tank inclined towards the pump
- The motors, adjustment of the level sensor, and the non-return valve are accessible from outside the tank.
- Switchgear with general fault signal (SSM) and overflow alarm;

Independent alarm from the network (with 9V battery not supplied).

• Liftson M - 2 pumps



LIFTSON M-LIX L

DESIGN

• lift-pump module consisting of:

- Monobloc tank in composite material from 62 to 140L depending on whether the pump is a single or double version, with a usable volume of 24 to 50L.

• Hydraulic part:

- pump built into the tank, vortex impeller, open passage 45 mm to 85 mm. Double water-proofed with oil chamber.

• Motor

- 2-pole housing in stainless steel.
- Fitted with heat sensor in single phase and three-phase versions.

Winding: 1~ 230 V
3~ 400 V
Frequency : 50 Hz
Protection : IP 67
Insulation class: LIFTSON M : F
LIFTSON LIX L : H

- Modules intended for intermittent operation.
- Modules delivered complete with control box and plug.

Thermal protection with reset.

• Weight of modules:

LIFTSON M 1 pump : 57 kg
LIFTSON M 2 pumps : 91 kg

LIFTSON Lix L 1 pump : 54 kg
LIFTSON Lix L 2 pumps : 82 kg

BASIC CONSTRUCTION

Main components	Material	
	Liftson M	Liftson LIX L
Tank	Polyethylene	
Hydraulic casing	Grey cast iron EN-GJL-250	Polyurethane and polyethylene
Vortex impeller	Polyurethane	
Shaft	Stainless steel 316L	
Mechanical seal	Carbide Si/Carbide Si/Nitrile	
Motor housing	Liftson M : Stainless steel 316L Liftson LIX L : Stainless steel 304	

IDENTIFICATION

LIFTSON M - 2 V - 208 / 5,3 T4

- Waste water lift-pump module
- Range M
- Number of pumps — 1 : V, 2 : 2V
- Motor 2 pole : 208
- DN : 80 mm
- Motor power
- Three-phase motor: T4
  Single phase: M

IDENTIFICATION

LIFTSON LIX L1-10/EAD1-2-T0018-540-P/MS

- Waste water lift-pump module
- Range
- Number of pumps
- Max. pressure in metre at Q=0
- dry chamber motor
- Standard execution
- 2 independently operating mechanical seals
- IE class of motor
- Number of pole
- 3~ moteur
- Motor power P2 kW/10
- Frequency 50 Hz
- Current code
- cable with plug
- MS Lift Control box

HYDRAULIC PERFORMANCES

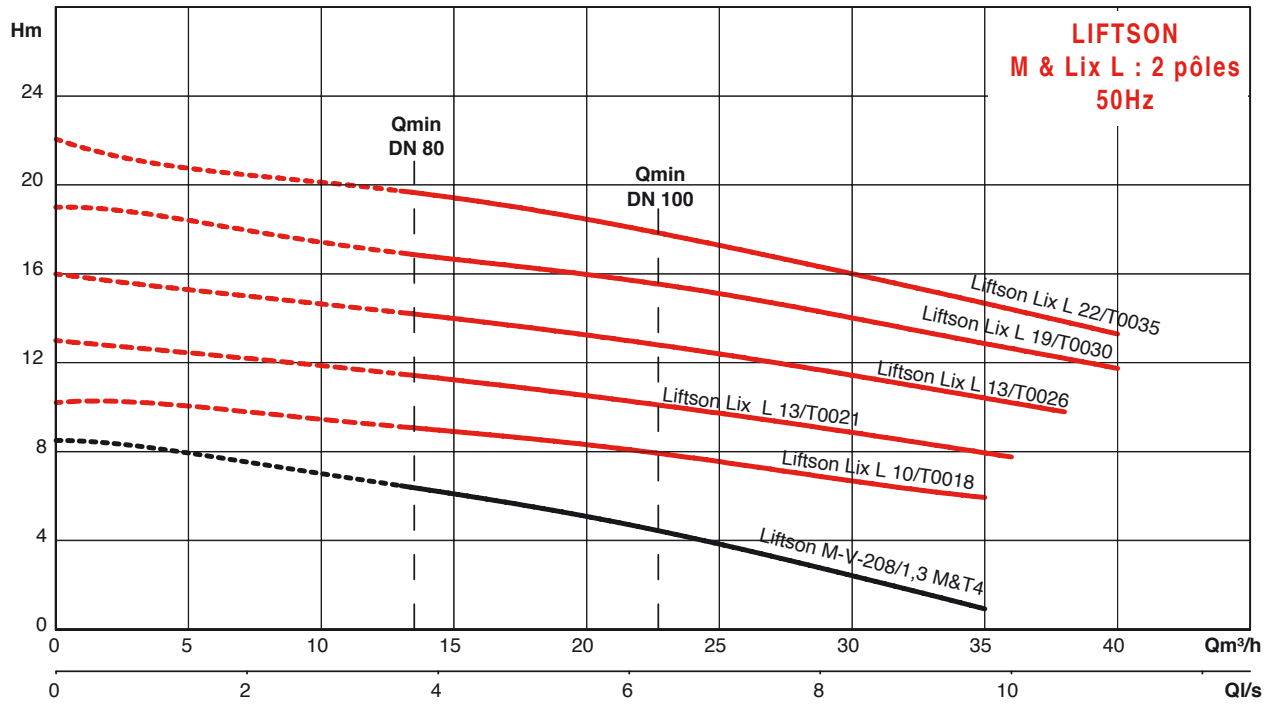

DIMENSIONS AND CHARACTERISTICS LIFTSON M

• LIFTSON M - 1 PUMP

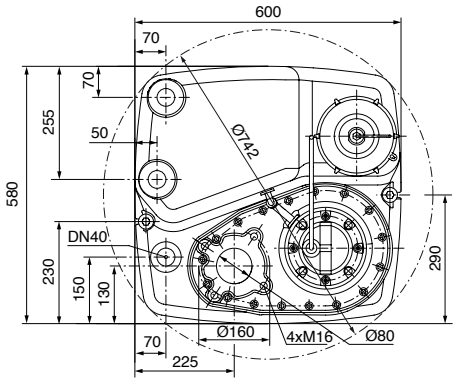

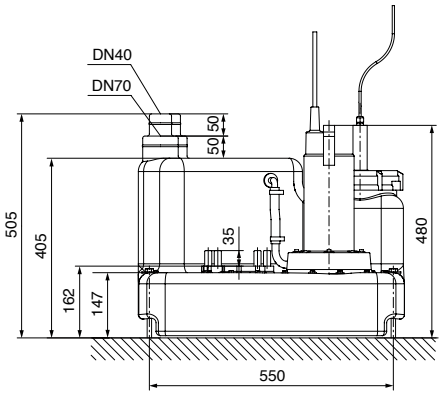

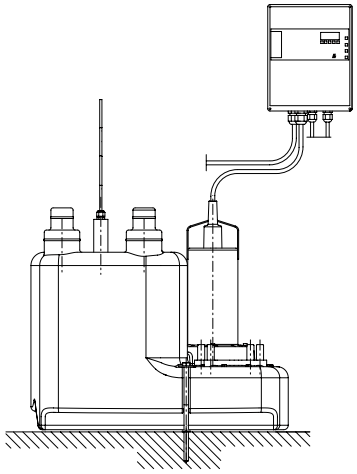

• LIFTSON M - 2 PUMPS

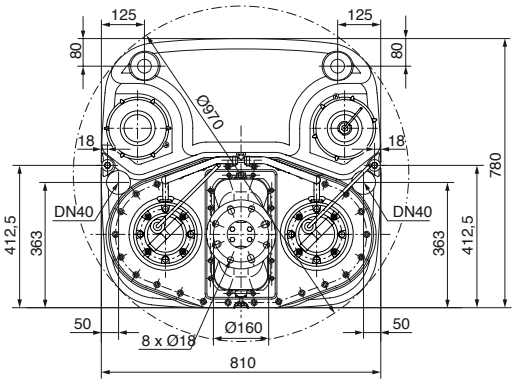

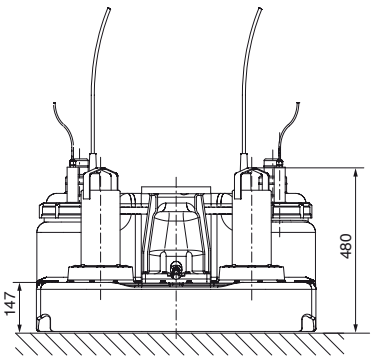

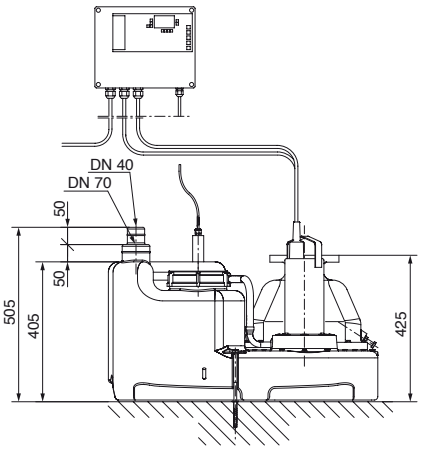

LIFTSON M-LIX L

DIMENSIONS AND CHARACTERISTICS LIFTSON LIX L

• **LIFTSON Lix L - 1 PUMP**

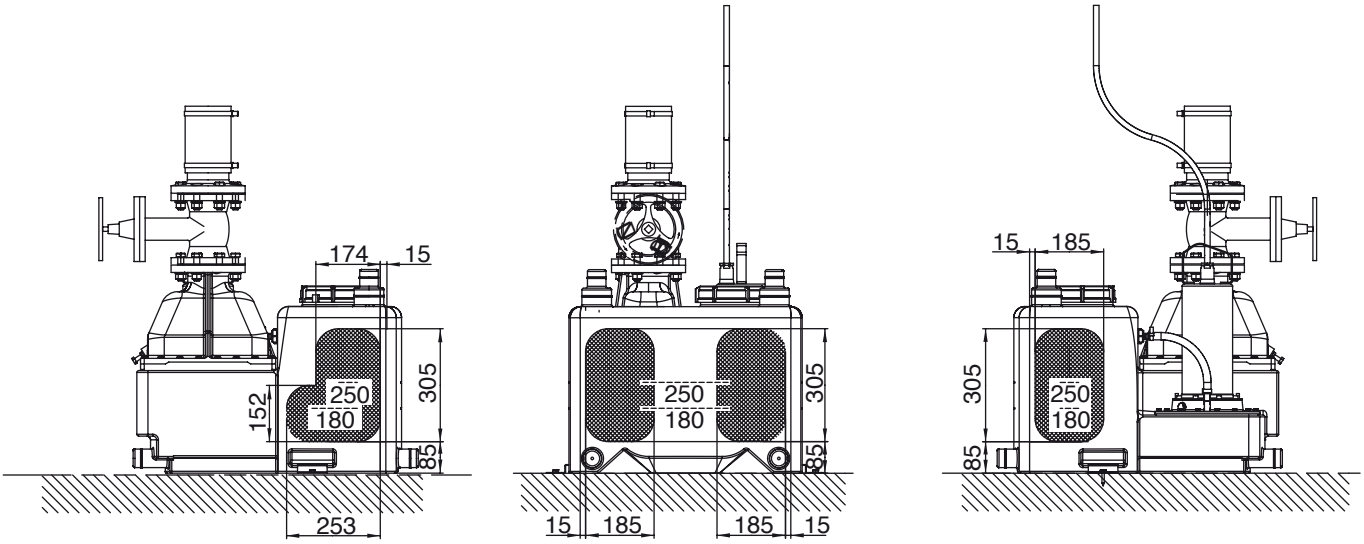

• **LIFTSON Lix L - 2 PUMPS**

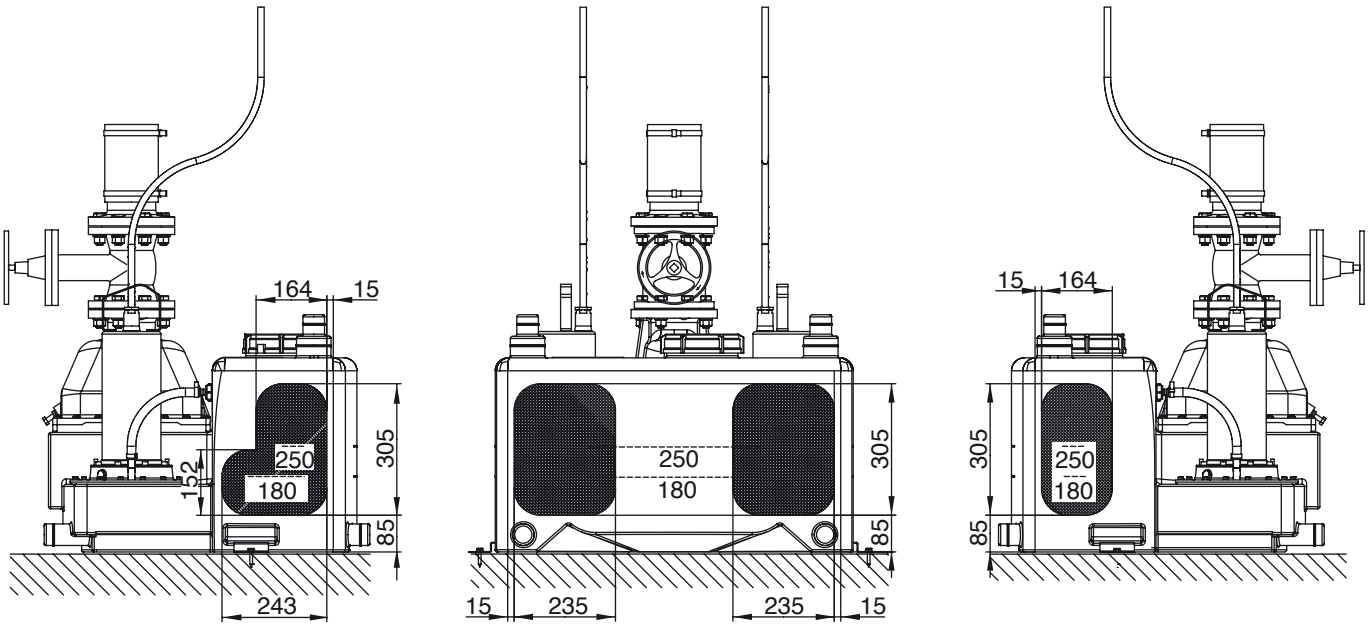

INSTALLATION DIAGRAM. CONNECTIONS AND ACCESSORIES

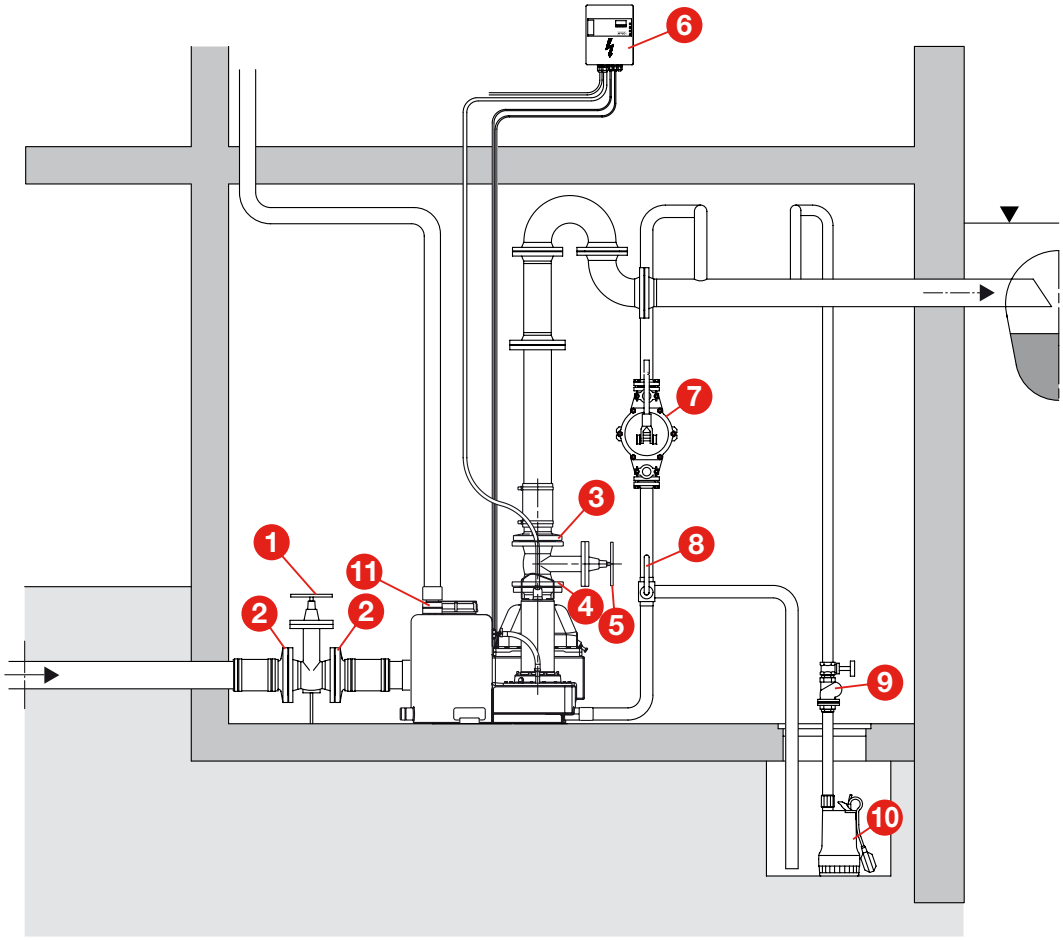

1. Shut-off valve DN100 ou DN150
2. Conversion flange DN100 ou DN150
3. Conversion flange DN80/100
4. Non-return valve (built into outlet pipe)
5. Shut-off valve DN80
6. Liftson Control box MS Lift 1x4,0 ou MS Lift 2x4,0
7. Hand pump
8. Three-way valves
9. Non-return valve
10. Sump pump
11. Vent connector

LIFTSON M-LIX L

ELECTRICAL CHARACTERISTICS

ORDER REFERENCE	Current	Power P1	Intensity In	ƒ	Speed	Protection	Operation
	V	kW	A	Hz	tr/mn		
LIFTSON M-V-208/1,3M	1x230	1,3	5,8	50	2900	IP 67	S3 15% 80 sec.
LIFTSON M-V-208/1,3T4	3x400	1,3	2,5	50	2900	IP 67	S3 15% 80 sec.
LIFTSON M-2V-208/1,3M	1x230	2x1,3	2x5,8	50	2900	IP 67	S3 15% 80 sec.
LIFTSON M-2V-208/1,3T4	3x400	2x1,3	2x2,5	50	2900	IP 67	S3 15% 80 sec.
LIFTSON LIX L1-10/EAD1-2-T0018-540-O/MS	3x400	1,8	3,7	50	2900	IP 67	S3-10%, 120 sec
LIFTSON LIX L1-13/EAD1-2-T0021-540-O/MS	3x400	2,1	4,5	50	2900	IP 67	S3-10%, 120 sec
LIFTSON LIX L1-16/EAD1-2-T0026-540-O/MS	3x400	2,6	5,4	50	2900	IP 67	S3-10%, 120 sec
LIFTSON LIX L1-19/EAD1-2-T0030-540-O/MS	3x400	3	6,3	50	2900	IP 67	S3-10%, 120 sec
LIFTSON LIX L1-22/EAD1-2-T0035-540-O/MS	3x400	3,5	7	50	2900	IP 67	S3-10%, 120 sec
LIFTSON LIX L2-10/EAD1-2-T0018-540-O/MS	3x400	2x1,8	2x3,7	50	2900	IP 67	S3-10%, 120 sec
LIFTSON LIX L2-13/EAD1-2-T0021-540-O/MS	3x400	2x2,1	2x4,5	50	2900	IP 67	S3-10%, 120 sec
LIFTSON LIX L2-16/EAD1-2-T0026-540-O/MS	3x400	2x2,6	2x5,4	50	2900	IP 67	S3-10%, 120 sec
LIFTSON LIX L2-19/EAD1-2-T0030-540-O/MS	3x400	2x3,0	2x6,3	50	2900	IP 67	S3-10%, 120 sec
LIFTSON LIX L2-22/EAD1-2-T0035-540-O/MS	3x400	2x3,5	2x7	50	2900	IP 67	S3-10%, 120 sec

RECOMMENDED ACCESSORIES (OPTIONS)

Name	Item no
Lip seals on inlet	
Lip seal nominal diameter DN 100	2521849
Lip seal kit nominal DN 100*	2521850
Lip seal kit nominal DN 150*	2521851
Outlet hose	
Flexible sleeve DN 80/80**	2521845
Flexible sleeve DN 80/100**	2521846
Hand pump	
POMPMAIN	2060166
Overflow alarms	
ALARMSON	4051111
ALARMSON-S	4051114

* Joint + hole cutter
** Clip + flat gasket + flexible sleeve + screws

FEATURES

a) Electrical

- Single phase 230V (M) – 50 Hz, with capacitor plug.
- Three-phase 400 V with Neutral (T4) – 50 Hz, with standard plug.

b) Fitting

- The pipework must be supported and fixed so that there is no strain on the tank.
- All the hydraulic connections to the LIFTSON must be through flexible hoses.
- The outlet connection must be made with the flexible hose provided.
- The inlet openings must be drilled on site using the hole-cutter provided.
- The emergency hand pump must be accessible and preferably connected to the lower part of the tank (nominal diameter 40 to 50 provided).

c) Items included

- Control box (1~230V/3~400V).
- Connexion kit for the DN100 inlet (hole-cutter provided).
- Spigot flange nominal diameter 80/100 with flat gasket, length of flexible hose, clips for the flexible hose, and nuts and bolts to connect the outlet pipe.
- DN70 connector to connect the air bleed pipe
- Length of flexible hose DN50 with clip to connect the inlet pipe to the hand diaphragm pump or to a DN40 inlet.
- Insulating strips to protect the installation by damping vibrations.
- Fixing equipment.
- Assembly and commissioning instructions.

d) Maintenance

- Replace the mechanical seals.

OPERATING RANGE

Flow rates up to:	62 m³/h
TMH up to:	25 m
Temperature:	+ 35°C*
Passage grading:	Ø 10 to 44 mm
Waste inlet:	DN 100
Waste discharge:	1"1/2 to 2"1/2
Ventilation opening:	Ø 75 mm
Electric sleeve opening:	Ø 63 mm

*+ 60°C with intermittent operation for 5 min.

SANITSON PREMIUM

PUMPING STATIONS

Rainwater and/or waste water Domestic and collective systems - 50 Hz

Compliance with standards EN 12050-1 or -2 inside buildings and EN 752 outside

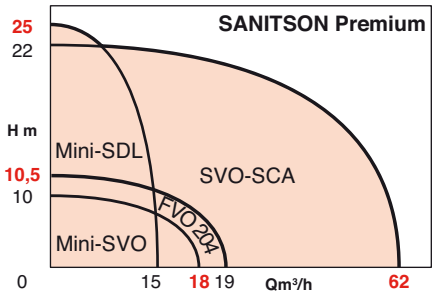

APPLICATIONS

Pumping station for waste water or valves with or without particles or faecal matter when the evacuation level is lower than the collection network: Bathrooms, toilets, showers, kitchens…

- **Individual housing**
- **Group housing**
- Local community (restaurants, sports grounds, camp-sites, local authorities...)

ADVANTAGES

- **Flexibility of applications:**
- **Internal and external system.**
- **Adapted to branched pressurised networks.**
- **Can be fully buried.**
- **Wide range of pumps available**
- **High-density large-capacity polyethylene tank: corrosion resistant and 100% watertight.**
- **Adaptable thanks to possibility of inlet holes all around the tank.**
- **Flexible system thanks to screwed 30cm height extension (optional).**

- **Ease of use:**
- **Wide range of accessories supplied.**
- **The screwed lid is opened and closed manually.**
- **Lid locked using screw provided.**
- **Possibility of operation with two pumps at the same time.**
- **Principle of "all in one": non-return valve, stop valve and integrated assembled internal piping.**
- **"Ready-to-assemble" domestic range.**

- **Easy maintenance and service:**
- **Pumps easy to dismantle.**
- **Integrated attachment for level adjustment.**
- **Two carrying handles.**
- **100% impervious (odours, gases and liquids).**





SANITSON PREMIUM

DESIGN

- Monobloc tank in high-density polyethylene, large capacity: impervious, corrosion and shock resistant.
- Screwed lid fitted with a seal.
- Choice of waste inlet holes (hole saw and DN 100 joint included).
- Equipped with one or two submersible single or three-phase pumps, silent motor, 50 Hz, vortex or single-channel grinding impellers.
- Level adjustment adapted to different types of pumps. Prevents blocking with grease.
- Protection and switch box determined according to pump type.
- Possibility of height adjustment.

Two pump model:

- Permanently available thanks to the "back-up" pump.
- Possibility of cascade operation in case of a sudden increase in flow.

UNIT DESCRIPTION



1 - High-density polyethylene tank Interior: one or two submersible pumps.
2 - Connection box delivered with the single-phase pump for the SANITSON Premium - domestic one pump.
3 - Lid with seals.
4 - Carrying handles.
5 - Discharge openings for waste.
6 - Ventilation opening.
7 - Opening available for electric sleeve (for buried system).
8 - Cable glands (for interior systems).
9 - Choice of waste inlet holes (see page 3).
10 - Tank drain hole, hand pump system.
11 - Switch box.
12 - 30 cm height increase (optional).

IDENTIFICATION

SANITSON Premium-2-SVO 206- 1,1M

Synthetic pumping station

2 = 2 pumps; nothing = 1 pump

Name of pump
no pump name = domestic version
(Mini SVO, SVO 205 or FVO 204, depending on version).
with pump name = professional version
(Mini SDL 204, SVO 205 or SVO 206, depending on version).

Number of poles

Nominal discharge diameter (cm)

Motor power P2 (kW)

M = single phase
MBF = single phase with starter box and float
T = three phase

WASTE INLET HOLE ZONES

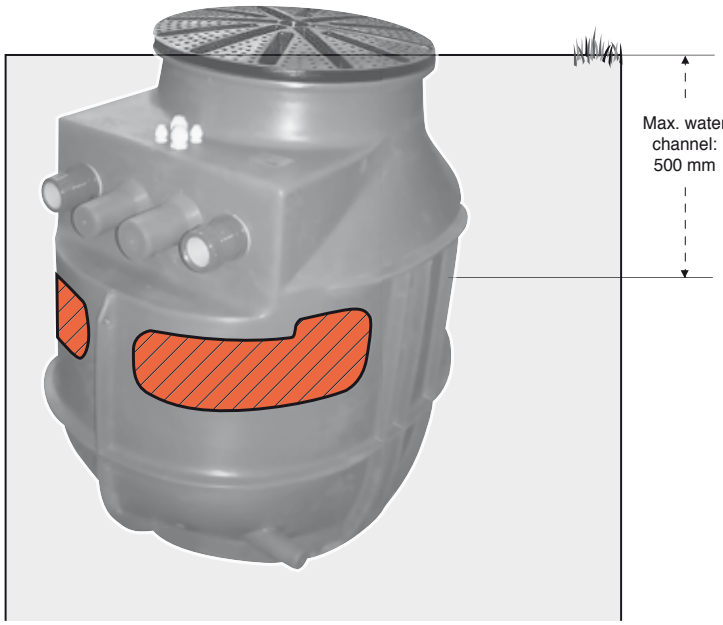

- Hole saw included

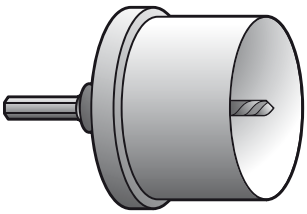

FUNCTIONAL SYSTEM DIAGRAM

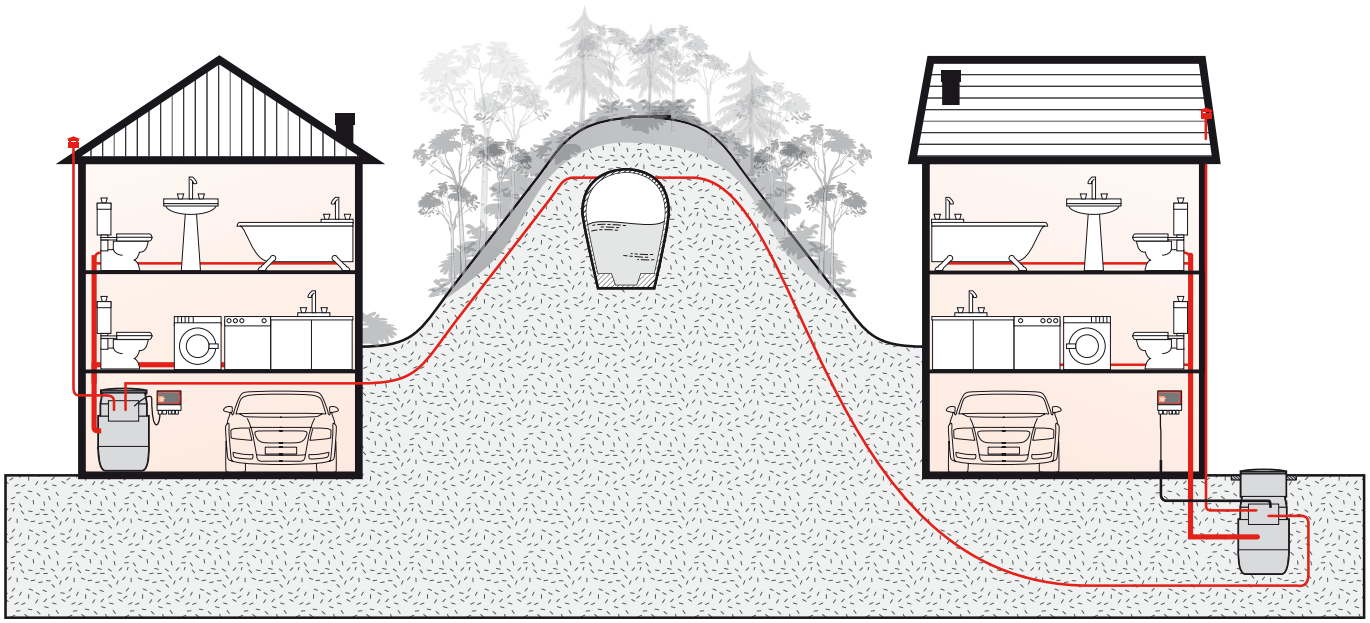

SANITSON PREMIUM

HYDRAULIC PERFORMANCES - MOTORS 2900 REV/MIN

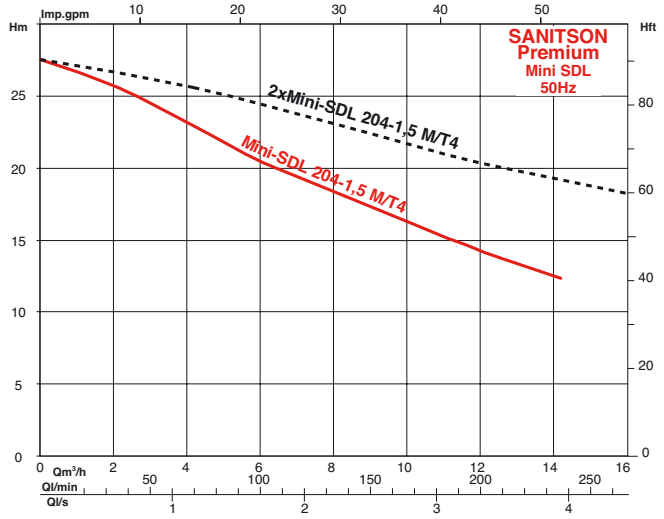

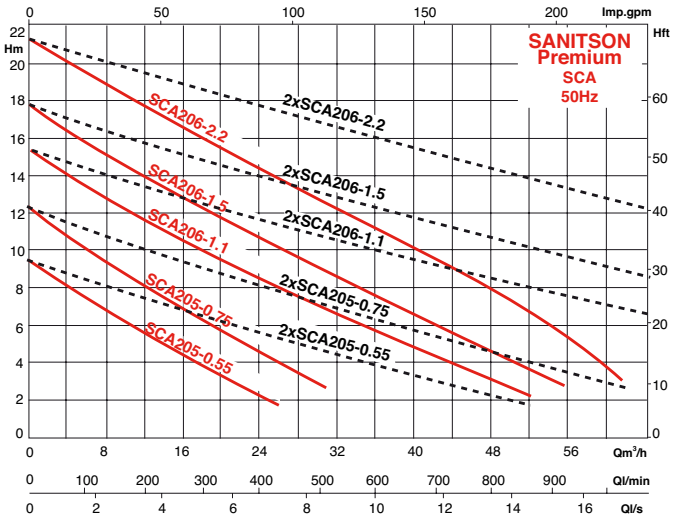

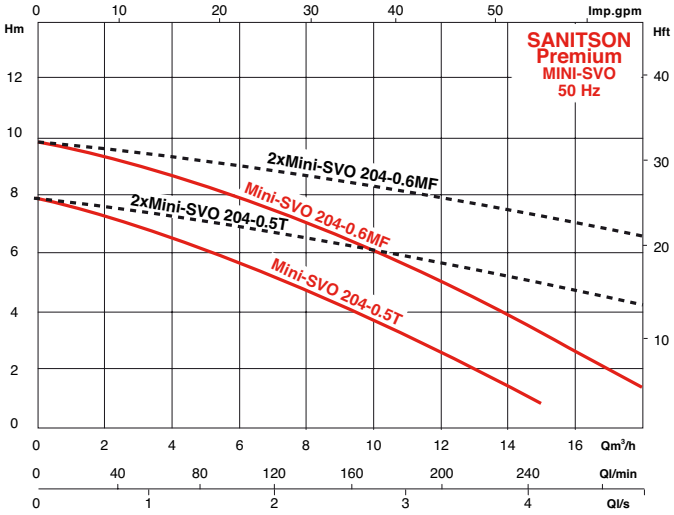

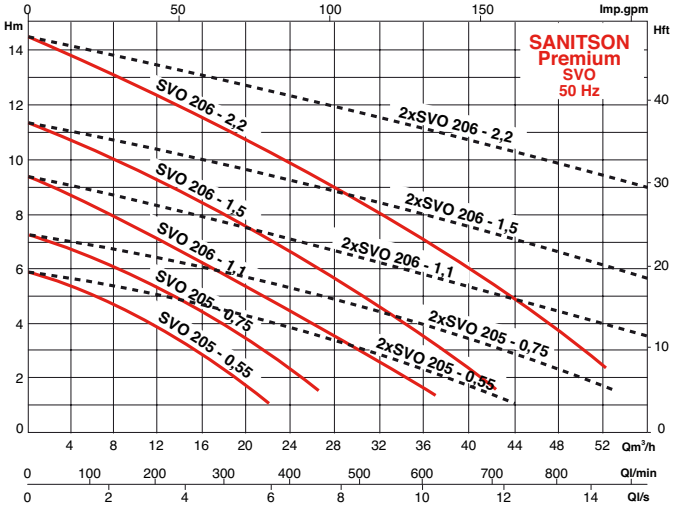

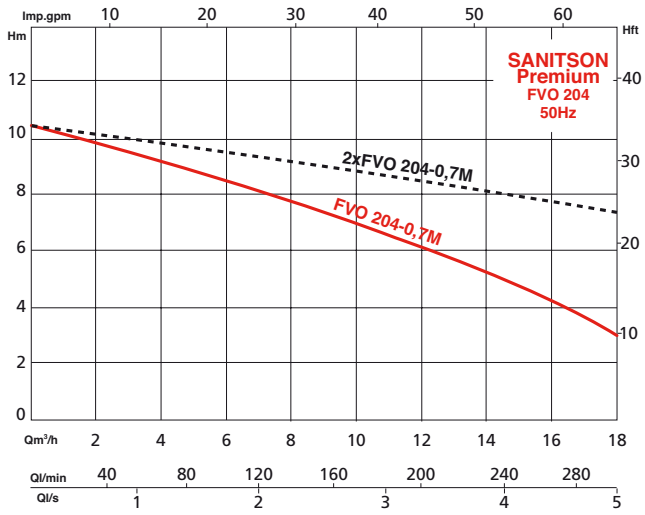

SWITCH BOXES

• SALMSON MS Lift

for Sanitson-Premium 204-0,5-T4



Application

Switch box for the automatic management of pumps and pumping units up to 4kW.

Technical features

- Operating voltage:	1 ~ 230 V 3 ~ 400 V
- Frequency:	50/60 Hz
- Max. breaking power:	P2 ≥ 4 kW (3 ~ 400 V)
- Max. current:	12A
- Protection type:	IP54
- Protection with fuses:	16A, AC3 (not supplied)
- Ambient temperature:	-10 °C to +40°C
- Alarm contact: Max. contact load	250 V, 1A~
- Operating indication contact: Max. contact load.	250 V, 1A~
- Transformer protection fuse:	100 mA/500V

• SALMSON YN 3100

for SANITSON Premium professional one pump version



Application

These switch boxes can be used to manage one (YN3112) or two (YN3212) pumps with a maximum absorbed power of 4 kW.

Technical features

- Operating voltage:	
YN3112 T4, YN 3212 T4 :	3 ~ 400 V (L1,L2,L3,PE)
YN3112 M, YN 3212 M :	1 ~ 230 V (L,N,PE)
- Frequency:	50/60 Hz
- Maximum connected power:	P2 ≥ 4 Kw
- Intensity range:	0,3 -12,0A (M or T4)
- Protection type:	IP 65
- Temperature range:	-20 to +60°C
- Alarm contact:	
Contact load	250 V, 1 A

All the signal and control elements can be found on the front of the switch box.
Easy to use thanks to configured switch box operated with keys and a red rotating button on the front.
Changes in the adjustment values (by means of a digital potentiometer) are immediately displayed in light text on the LCD screen
The filling level of the station is indicated in cm (with IPAE 0-1mCE).
The electronic control system is placed in a wall-mounted case (IP65).

Advantages:

- Innovative: adjustment of levels by IPAE
- Easy installation: adjustments are made outside the tank.
- Easy maintenance thanks to a pump starting meter and an hourly operating meter.

Security:

- In the event of a prolonged stoppage, the box sends an automatic impulse to the pumps to clean the mechanical seal.
- Automatic resetting.
- Management of the parallel alignment of two pumps in the event of a strong flow (YN3200).

Open-ended:

Allows for activation of signal.

• SALMSON YN 3200

for SANITSON Premium domestic and professional two pump version



SANITSON PREMIUM

CONNECTIONS AND ACCESSORIES

• Example of interior system

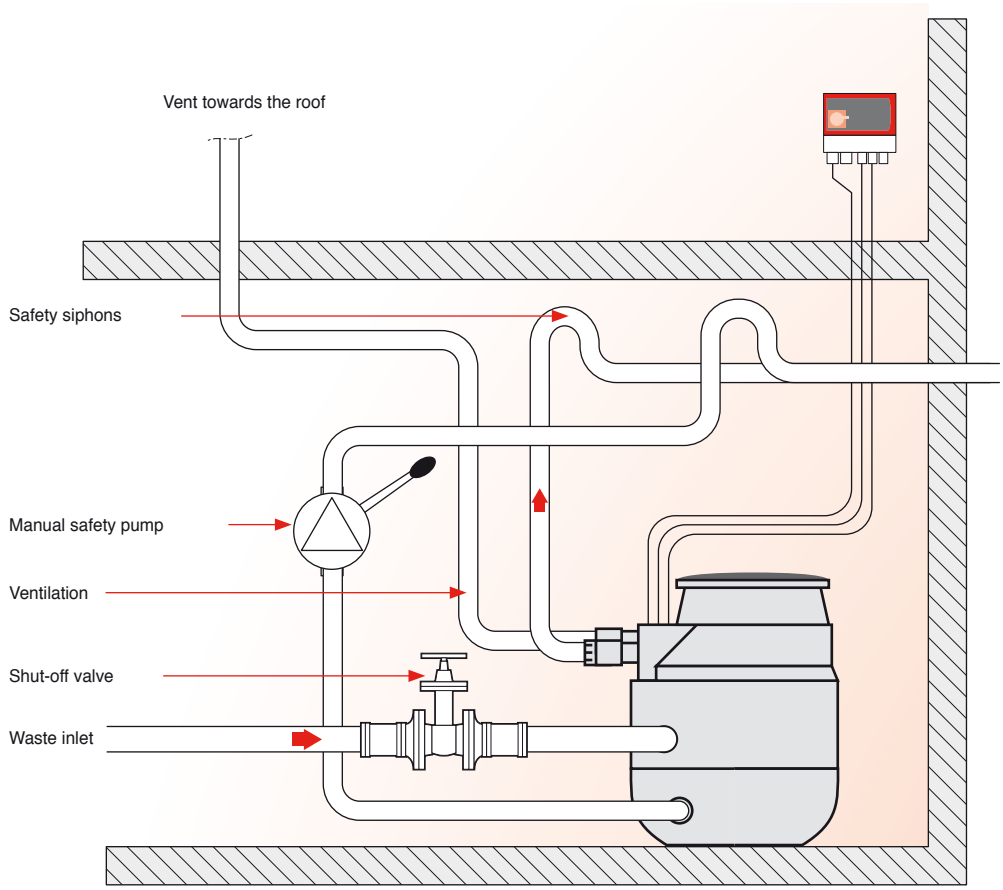

• Example of exterior system buried with height adjustment (maximum of one)

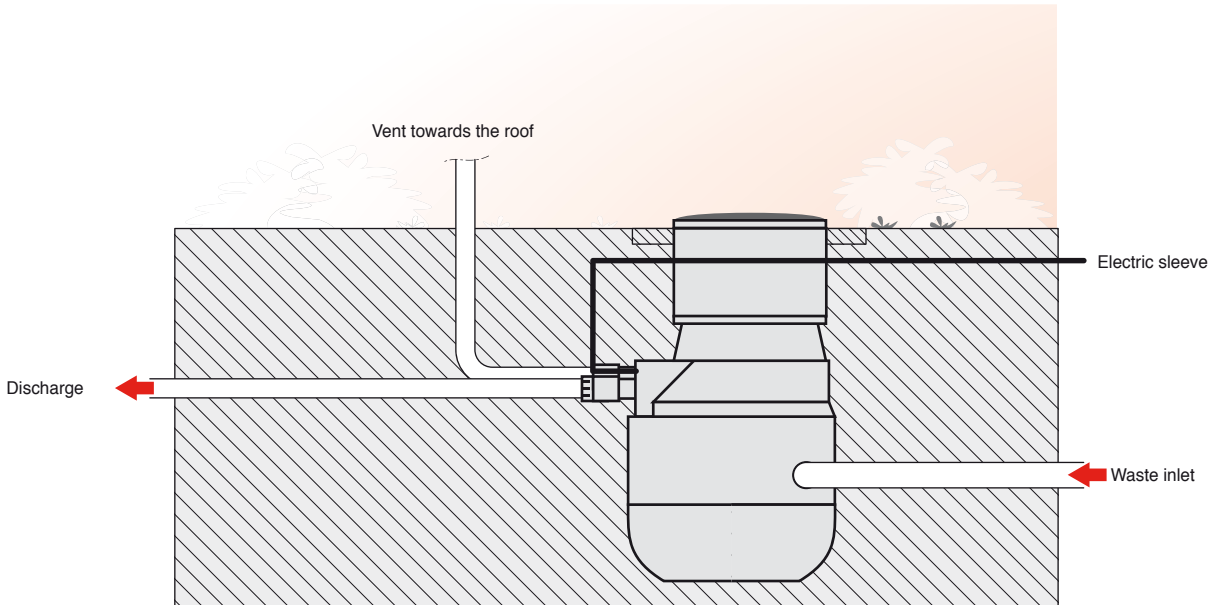

DIMENSIONAL FEATURES – SANITSON PREMIUM - VERSION 1 PUMP

- **SANITSON Premium - version 1 pump**

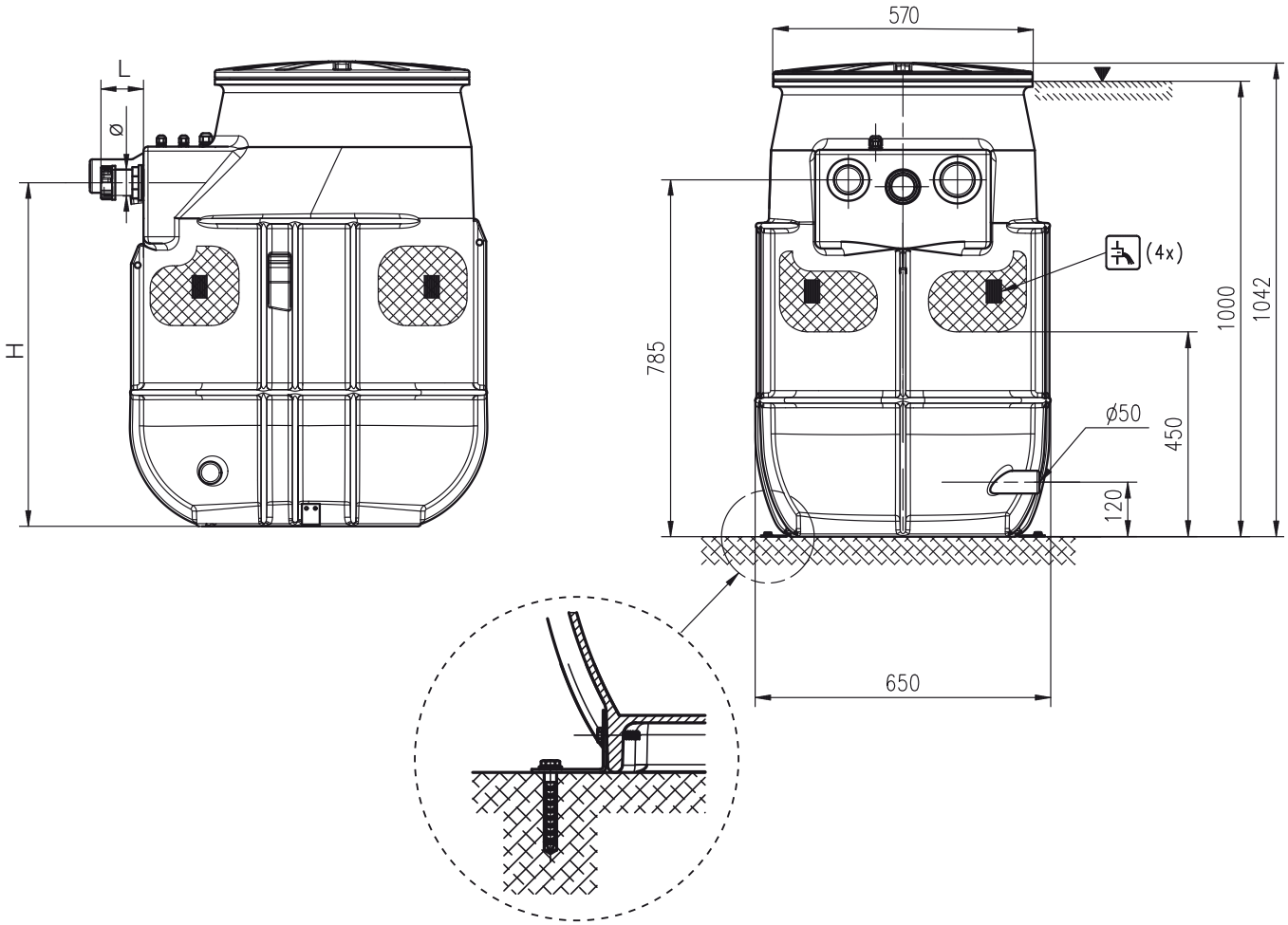

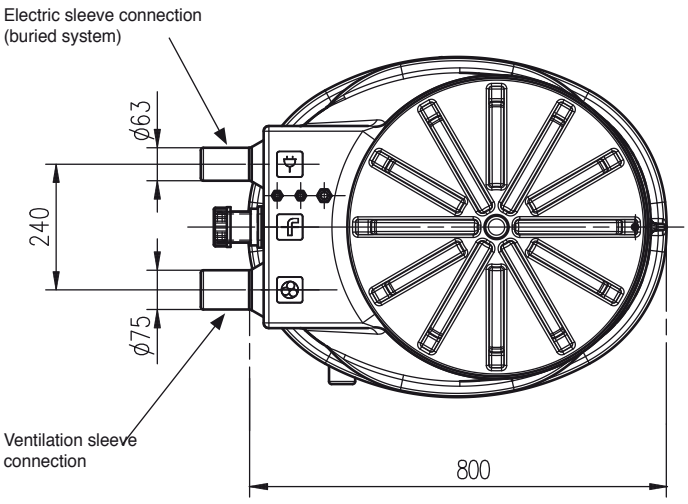

	Domestic version			Professional version		
	Mini - SVO 204	**FVO 204**	**SVO 205**	**Mini SDL 204**	**SVO 205**	**SVO 206**
Volume Total (l)	255	255	255	255	255	255
H (mm)	770	770	770	735	735	735
L (mm)	100	60	50	95	65	65
Ø	G2”	G2”1/2	G2”1/2	G1”½	G2”	G2”

SANITSON PREMIUM

DIMENSIONAL FEATURES – SANITSON PREMIUM - VERSION 2 PUMPS

• **SANITSON Premium - 2 pumps**

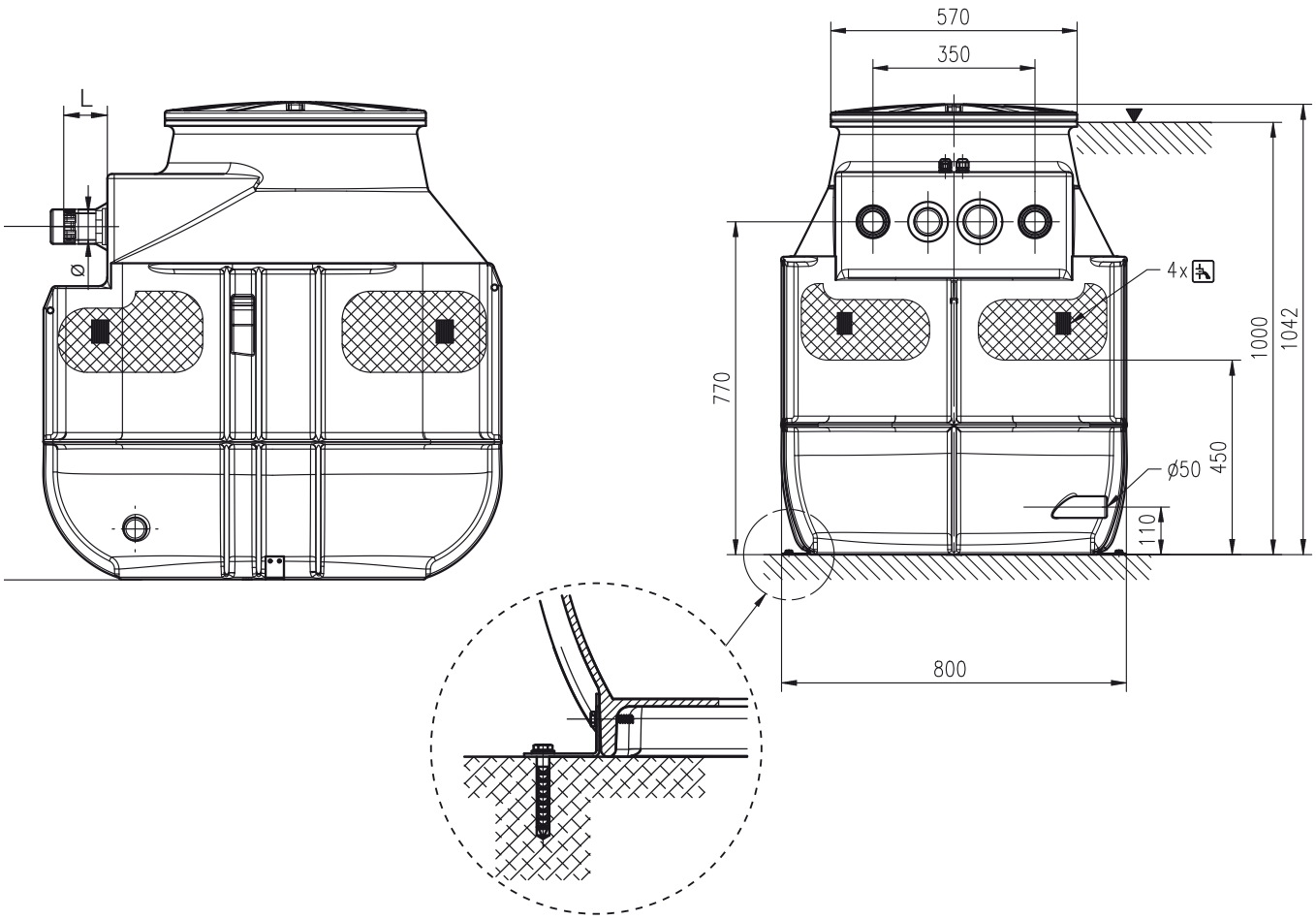

	Domestic version			Professional version		
	Mini - SVO 204	FVO 204	SVO 205	Mini SDL 204	SVO 205	SVO 206
Volume Total (l)	400	400	400	400	400	400
H (mm)	770	770	770	745	745	745
L (mm)	100	60	50	100	75	75
Ø	G2”	G2”1/2	G2”1/2	G1”½	G2”	G2”

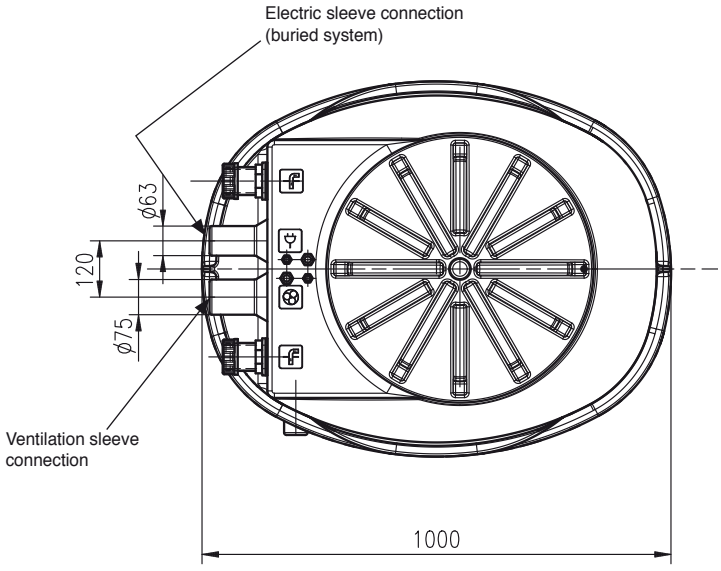

ELECTRICAL FEATURES AND PARTICULARITIES

• SANITSON Premium Domestic delivered fully assembled including:

- PEHD tank, lid and pump/pumps.
- Regulation system.
- Stainless steel 316 and PVC discharge line integrating cast iron ball-type non-return valve and PVC 1/4 turn valve.

Item reference	Particularity	Voltage V	Power P1 kW	Intensity A	Max. grading mm	Weight kg	Compliant with standard	Order reference
Sanitson Premium - 204-0,5T4	• Pump with float, • Discharge fitted with compression connection.	3~400	1 x 0,68	1,9	35	51	CE EN 12050 - 2	2525141
Sanitson Premium - 204-0,6M	• Pump with float, capacitor integrate din motor, direct connection to 230V mains.	1~230	1 x 0,94	4,7	35	51	CE EN 12050 - 2	2525140
Sanitson Premium - 204-0,7M EN-1	• Discharge fitted with compression connection.	1~230	1 x 1,2	5,3	40	64	CE EN 12050 - 1	2529850
Sanitson Premium - 205-0,75MBF	• Pumps with float and capacitor case. • Discharge fitted with threaded connection.	1~230	1 x 1,1	5,84	44	46	CE EN 12050 - 1	2525596
Sanitson Premium - 2-204-0,5T4	• YN3000 switch box (audible alarm included) and IPAE level probe. • Discharge fitted with compression connection (except SVO 205 equipped with threaded connection).	3~400	2 x 0,68	2 x 1,9	35	105	CE EN 12050 - 2	2525143
Sanitson Premium - 2 -204-0,6M		1~230	2 x 0,94	2 x 4,7	35	78	CE EN 12050 - 2	2525142
Sanitson Premium - 2 -204-0,7M EN-1		1~230	2 x 1,2	2 x 5,3	40	103	CE EN 12050 - 1	2529851
Sanitson Premium - 2 -205-0,75MBF		1~230	2 x 1,1	2 x 5,84	44	63	CE EN 12050 - 1	2525597

• SANITSON Premium Professional delivered assembled except pump, box and IPAE:

- PEHD tank and lid.
- Pumps on rope clamp and stainless steel 316 lift chain.
- Stainless steel discharge line integrating composite ball-type non-return valve and brass gate valve, threaded connection.
- YN3000 switch box (audible alarm included) and IPAE level probe.

Item reference	Voltage V	Power P2 kW	Intensity A	Max. grading mm	Weight kg	Compliant with the standard	Order reference
Sanitson Premium - MiniSDL 204-1,5M	1~230	1x1,5	9,5	10	44	CE EN 12050 - 1	4099765
Sanitson Premium - MiniSDL 204-1,5T4	3~400	1x1,5	3,2	10	44	CE EN 12050 - 1	4099766
Sanitson Premium - SVO205-0,75T 4	3~400	1x0,75	2	44	46	CE EN 12050 - 1	4099761
Sanitson Premium - SVO206-1,1T4	3~400	1x1,1	3,2	44	46	CE EN 12050 - 1	4099763
Sanitson Premium - SVO206-1,1M	1~230	1x1,1	6,9	44	46	CE EN 12050 - 1	4099762
Sanitson Premium - SVO206-1,5T4	3~400	1x1,5	3,6	44	46	CE EN 12050 - 1	4099764
Sanitson Premium - SVO206-1,5M	1~230	1x1,5	9,5	44	46	CE EN 12050 - 1	4099767
Sanitson Premium - SVO-206-2,2T4	3~400	1x2,2	4,9	44	46	CE EN 12050 - 1	4099768
Sanitson Premium - 2 - MiniSDL 204-1,5M	1~230	2x1,5	2 x 9,5	10	60	CE EN 12050 - 1	4099757
Sanitson Premium - 2 - MiniSDL 204-1,5T4	3~400	2x1,5	2 x 3,2	10	60	CE EN 12050 - 1	4099758
Sanitson Premium - 2 - SVO205-0,75T4	3~400	2x0,75	2 x 2	44	63	CE EN 12050 - 1	4099753
Sanitson Premium - 2 - SVO206-1,1T4	3~400	2x1,1	2 x 3,2	44	63	CE EN 12050 - 1	4099755
Sanitson Premium - 2 - SVO206-1,1M	1~230	2x1,1	2 x 6,9	44	63	CE EN 12050 - 1	4099754
Sanitson Premium - 2 - SVO206-1,5T4	3~400	2x1,5	2 x 3,6	44	63	CE EN 12050 - 1	4099756
Sanitson Premium - 2 - SVO206-1,5M	1~230	2x1,5	2 x 9,5	44	63	CE EN 12050 - 1	4099759
Sanitson Premium - 2 - SVO-206-2,2T4	3~400	2x2,2	2 x 4,9	44	63	CE EN 12050 - 1	4099760

SCA models with pump single-channel impeller available on request

Standard CE EN 12050-1: For waste containing faecal matter (sewage, also covers grey water and rainwater waste).

Standard CE EN 12050-2: For waste not containing faecal matter (exclusively for grey water and rainwater waste).

SANITSON PREMIUM

ACCESSORIES

Description	Order reference
30 cm height adjustment with joints	2525177
Ø110mm joint for additional inlet	2521849
Manual pump bracket (compulsory)	65959
Manual diaphragm pump G 1 ½"	2060166
Suction pad (firing*) G 1"	2525168
DN 100 shut-off valve attachment material included for waste inlet	2017163
DN 100 flanged sleeve to connect the shut-off valve to the waste inlet	2521847
Shut-off valve G 1 ½"	2525175
Shut-off valve G 2"	2525176
PVC G 1 ½" connection to DN50 of Sanitson discharge to network	2525182
PVC G 1 ½" connection to DN65 of Sanitson discharge to network	2525158
PVC G 2" connection to DN65 of Sanitson discharge to network	2525159
PVC G 2" connection to DN75 of Sanitson discharge to network	2525169
ALARMSON** Audible overflow alarm for domestic Sanitson Premium 1 pump (already included in Yn3000 box for the other models)	2529590
ALARMSON S** Audible overflow alarm for domestic Sanitson Premium 1 pump (already included in Yn3000 box for the other models) with 8h standby capacity	2529591
NIVO430 float 10m cable	4027319
NIVO430 float 20m cable	4027320

* If the SANITSON Premium is above the waste inlet.
** Delivered without floats.

PARTICULARITIES

a) Electricity

- Single phase 230V - 50Hz, with firing capacitor integrated in Mini SVO 204 and FVO 204 pump motors and in external housing for SDL and SVO-SCA 205/206 pumps.
- Three phase 400V - 50Hz.

b) Installation

- Connect to collection network with rigid pump for discharge and PVC pipe Ø 100mm for waste inlet and vent
. **See applicable standards.**

c) Emballage

- on pallet

d) Maintenance

- Simplified maintenance.

ACCESSORIES SUPPLIED

- Anti-floating plates with self-drilling screw to attach the tank and screw + concrete pin for ground + hose clamp.
- Reinforced tube sleeve for manual pump connection à main
- Standard plug for single-phase pump.
- Ø124 mm hole saw with drill to create waste inlet.
- Ø110mm joint for waste inlet + hose clamp.
- Integrated bracket for attachment of level adjustment.

HVAC

Technical reminders **676**

HVAC - Wet rotor circulators

NXL - NYL	**677**
Siriux home	**681**
Priux home	**687**
Priux home B 60-40	**695**
Priux home D	**701**
Priux home zoom	**709**
Geosun	**715**
SCX - DCX small collective	**719**
SCX - DCX collective	**727**
Siriux master	**755**
Priux master	**799**

HVAC - Dry rotor circulators

LRL-JRL - LRL-U	**819**
LRN-JRN	**843**
LRE-JRE	**859**
SIL	**895**
DIL	**919**
SIE	**951**
DIE	**979**
Ixens	**1027**
GET	**1049**
PBS	**1057**
PBE	**1077**
NRG	**1117**
NOS	**1123**
NOES	**1163**
NOE-NOH	**1171**
SCP	**1173**

HVAC - Modules

Expanson comfort	**1213**
Kidson	**1223**
Cleanson	**1227**
Condenson classic	**1233**

HOW TO CHOOSE A CIRCULATOR

DETERMINING THE FLOW RATE:

The flow rate depens on:
- boiler capacity.
- difference (ΔT) between the "start" temperature and the "return" temperature.

ΔT will depend on type of heating system and is normally shown on tables provided by system supplier.

The following average values can be taken into account:
- radiators: 15/20°C.
- underfloor heating: 10°C.

$Qm^3/h = P\ (Kw) / \Delta T\ (°C) \times 1{,}163$

Note: on system where the boiler is used for production of secondary hot water as well as for heating. only that part of its output dedicated to heating should be taken into consideration in the formula above.

Example: for an installed capacity of 10 kW

Radiators:

$$Q = \frac{10}{15 \times 1.163} = 0.57\ m^3/h$$

Underfloor heating:

$$Q = \frac{10}{15 \times 1.163} = 0.85\ m^3/h$$

DETERMINING THE TOTAL MANOMETRIC HEAD:

In a closed circuit. the Total Manometric Head is equal to the pressure losses.
Flamand's law – TMH of modern systems is approx 20mm/linear metre. More precise data are given in the table below:

Pressure losses in new pipeworks

	Nominal diameter of pipework				
m^3/h	1/2"	3/4"	1"	1"1/4	1"1/2
0,1	0.004				
0,2	0.015	0.003			
0,5	0.100	0.020	0.005	0.001	
0,7	**0.200**	0.040	0.010	0.002	
1	0.400	0.080	0.024	0.005	0.002
1,5		**0.170**	0.050	0.010	0.003
2		0.330	**0.900**	0.020	0.009
3			0.210	**0.045**	0.022
4			0.320	0.076	0.035
5					**0.060**

The data is expressed in water column meters per linear meter of metallic pipe.

For PVC pipework take 80% o f values shown opposite (multiply values by 0.8).

Values in red match flow velocity ranging from 1 to 1.5m/s (max speed recommended).

OPERATING LIMITS

Flow rates up to :	**4 m³/h**
Heads up to :	**6 m**
Max. operating pressure :	**10 bar**
Temperature range :	**-10°C to +110°C***
Max. ambient temperature :	**+ 40°C**

*up to 50% glycol by volume

NXL ★★★ - NYL★★★

DOMESTIC HEATING CIRCULATORS
Individual heating - air-conditioning
50 Hz

- Cannot either be sold or be used in the EEC
- Does not bear the CE marking

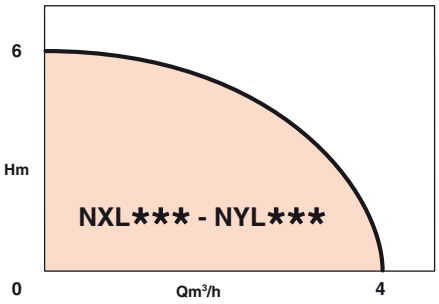

APPLICATIONS

Accelerated hot - or cold - water circulation in open or closed heating or air-conditioning circuits :
- Detached houses
- Greenhouses...
- New installations, old (renovations), extensions.

ADVANTAGES

- **Flexible**
- **Quiet**
- **Reliable : overprotection**
- **Optimized efficiencies**

• NYL* 33-25P**





• NYL* 53-25P**
• NYL* 13-25P**

130 mm between flanges,
terminal box at 9 o'clock for easier access to unions.

• NXL* 53-32P**
• NXL* 13-32P**
Circulator diameter allowing direct connection to 1¼" pipe



• NXL* 33-25P**



NXL ★★★ - NYL★★★

ADVANTAGES

• Flexible:
- electrical connection on the right or left
- quick electrical connections.

• Quiet:
- curves appropriate for floor-mounted boilers, flow limited to reduce flowing-water noise.

• Reliable: overprotection
- Anti-particle filter
- double flow circulation with drilled shaft (anti-clogging, venting of the rotor chamber).
- High starting torque.

• Optimized efficiencies

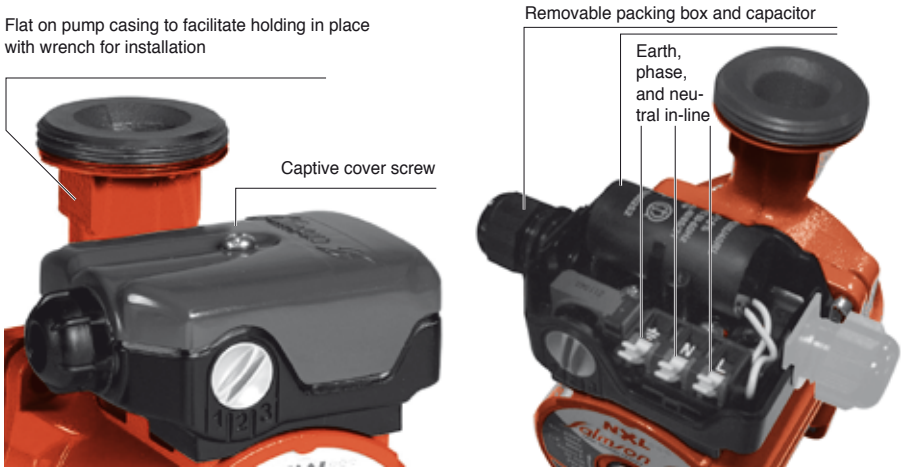

DESIGN

• Pump
- Pump casing with threaded ports for direct mounting on pipe.
- Rotating parts in contact with water made of corrosion-proof materials.
- Stainless-steel impeller neck ring.

• Motors
- Three speeds with manual selection.
- Wet rotor, bearings lubricated by pumped liquid.
- Rotor chamber protected by sintered bronze filter.
- Manual bleed when started up.
- Drilled shaft.

Speed :	see table
Winding 1-phase :	230 V
Frequency :	50 Hz (60 Hz optional)
Insulating category :	155 (F)
Protection index :	IP 42
Conformity :	IEC 60.335-2-51
	TF110

MAXIMUM SPEED SELECTION CHART

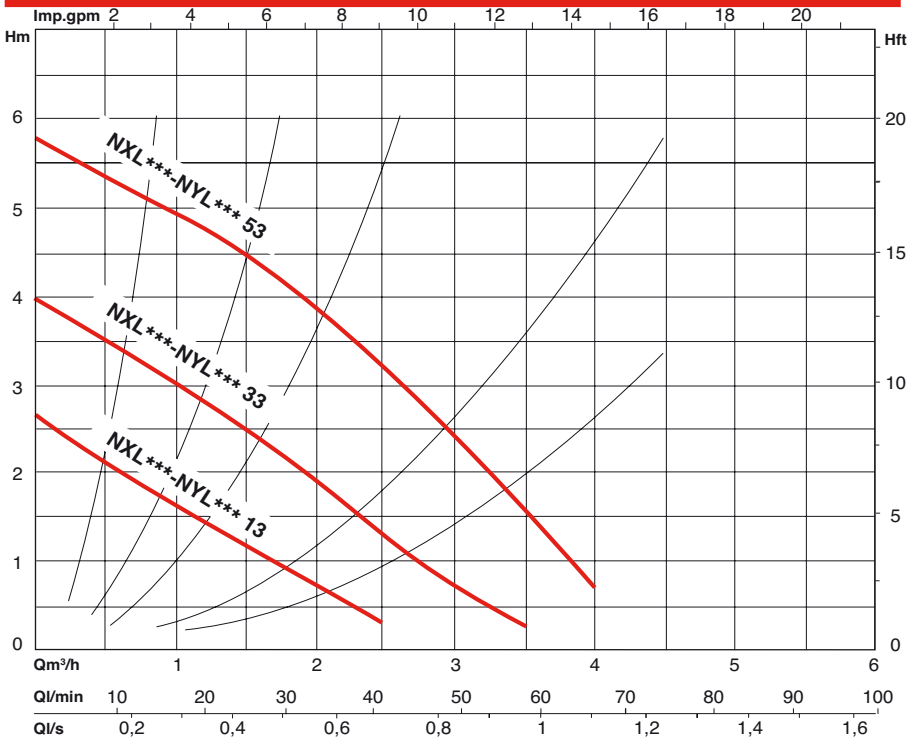

STANDARD CONSTRUCTION

Main part	Material
Pump housing	Cast iron GG20
Impeller	Composite mat.
Shaft-airgap sleeve	Stainless steel
Impeller neck ring	Stainless steel
Bearings	Graphite
Seals	Ethylene-Propylene

• MINIMUM SUCTION PRESSURES ACCORDING TO OPERATING TEMPERATURE

Type	82°C	95°C	110°C
All models	1,5 mw.g.	3 mw.g.	10 mw.g.

10.2 m w.g. = 1 bar

To avoid bearing damage and the risks of cavitation of the pump, it is essential to observe the minimum pressures stated above.

NXL ★★★ - NYL★★★

IDENTIFICATION

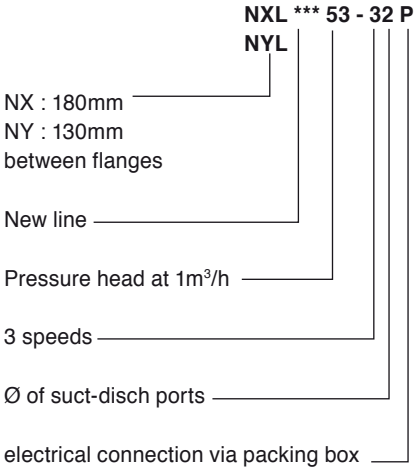

FITTING POSITIONS

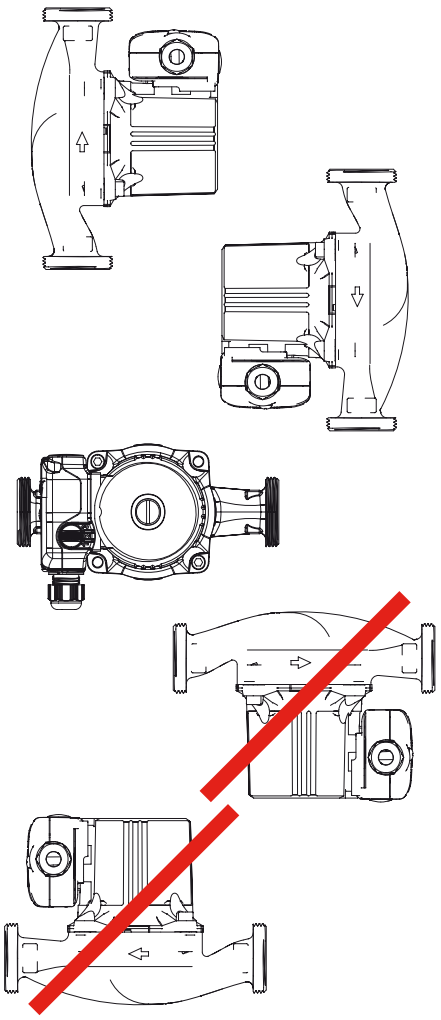

HYDRAULIC PERFORMANCES - 3 SPEEDS

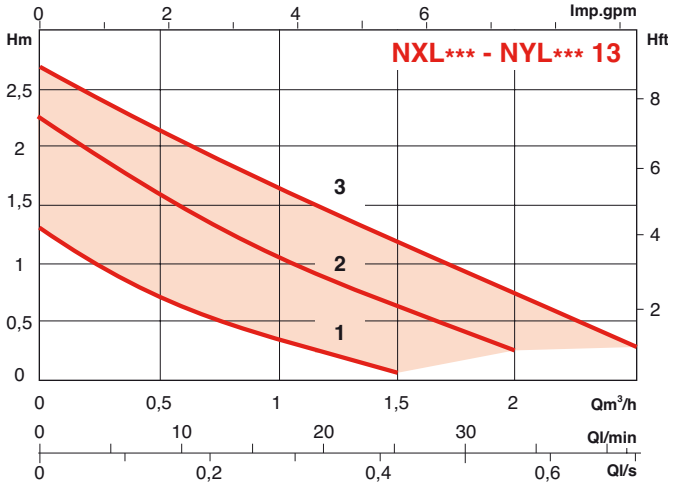

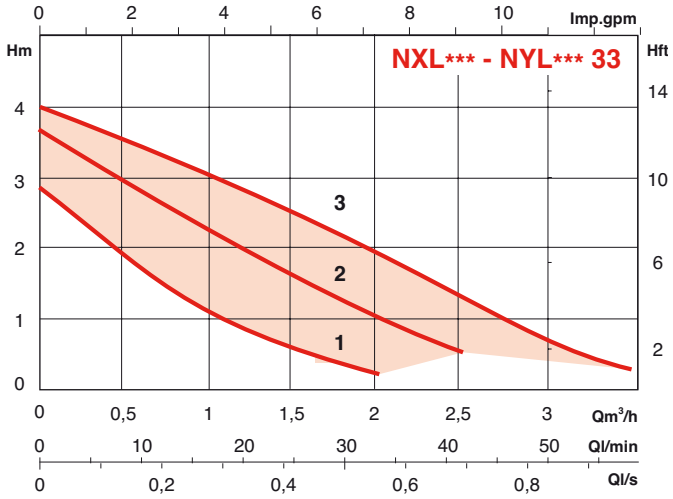

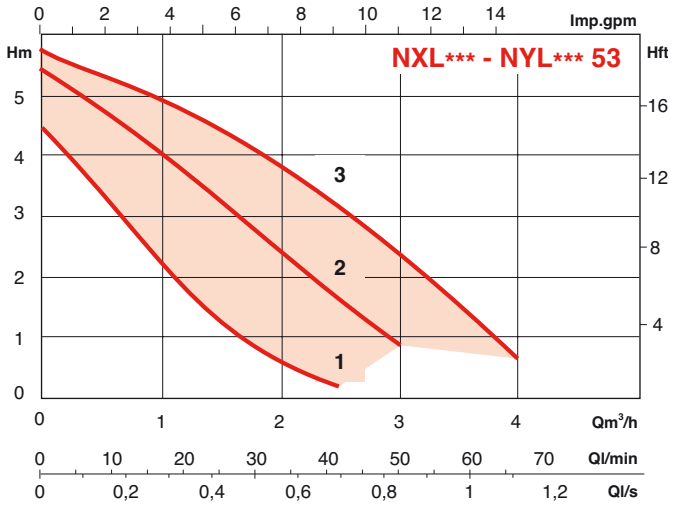

NXL ★★★ - NYL★★★

ELECTRICAL DATA AND DIMENSIONS

• **NXL*** 13 - NXL*** 33 - NXL*** 53**

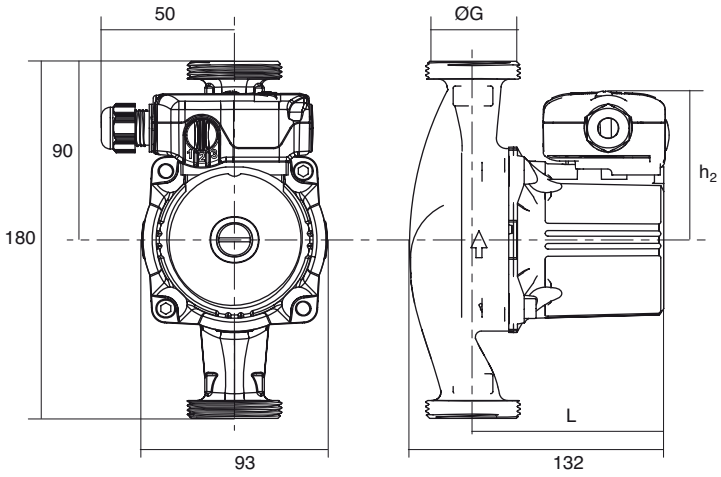

• **NYL*** 13 - NYL*** 33 - NYL*** 53**

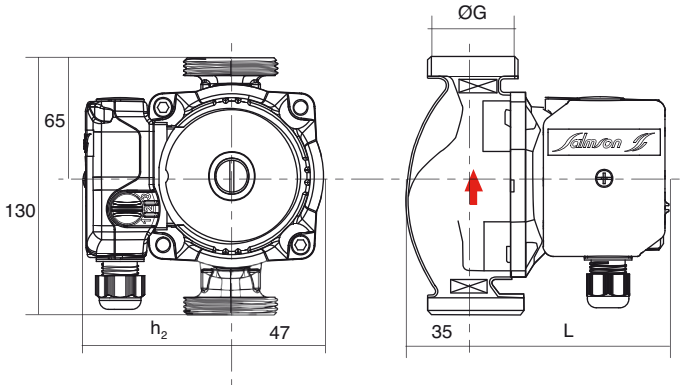

FEATURES

a) Electrical
- All types single-phase, 230-V, 50-Hz, with capacitor built into terminal box.
- Motor protection circuit-breaker not required.

b) Installation
- Motor shaft always horizontal.
- Connection to installation by unions

c) Packaging
- Supplied with gaskets, without unions.

d) Maintenance
- Standard exchange of circulator.

OPTIONS AND ACCESSORIES

- Unions.
- Isolating valves.
- Unsticking plug; facilitates unsticking of shaft and rotor (without removing plug).



Adaptation ring
ØG1$^{1/2"}$-2" Réf. 4051850



Spherical isolating valves
RU 2634 Réf. 4063825

Order Reference	MOTOR Speed selector	Speed (rpm)	P1 (W)	I1 (A)	Conden-sator µF x V	PUMP Body casing length	ØG circulator	Connexion on threaded pipe Ø 1/2"	Ø 3/4"	Ø 1"	Ø 1"1/4	L	h2	Mass (kg)
NXL***13-25	1	1 450	18	0,08	1,6 * 400	180 mm	1"1/2	_	RED 2027	RU 2634	_	98	73	2,35
NXL***13-32	2	1 500	30	0,13		180 mm	2"	_	_	RED 2634	RU 3342			
NYL***13-15						130 mm	1"	RU 1521	_	_	_			
NYL***13-25	3	1 800	45	0,20		130 mm	1"1/2	_	RED 2027	RU 2634	_			
NXL***33-25	1	1 550	28	0,13	1,7 * 400	180 mm	1"1/2	_	RED 2027	RU 2634	_	98	73	2,35
NXL***33-32						180 mm	2"	_	_	RED 2634	RU 3342			
NYL***33-15	2	1 950	38	0,17		130 mm	1"	RU 1521	_	_	_			
NYL***33-20						130 mm	1"1/4	_	RU 2027	_	_			
NYL***33-25	3	2 200	48	0,21		130 mm	1"1/2	_	RED 2027	RU 2634	_			
NXL***53-25	1	1 900	43	0,20	2,6 * 400	180 mm	1"1/2	_	RED 2027	RU 2634	_	98	77	2,35
NXL***53-32	2	2 350	61	0,28		180 mm	2"	_	_	RED 2634	RU 3342			
NYL***53-15						130 mm	1"	RU 1521	_	_	_			
NYL***53-25	3	2 550	84	0.36		130 mm	1"1/2	_	RED 2027	RU 2634	_			

OPERATING RANGE

Flow rate of up to	**4 m³/h**
Manometric head of up to	**6 m**
Max. operating pressure	**10 bar**
Min. intake pressure	**0,3 bar at 95°C**
Water temperature range	**+2 at +110°C***
EEI-Part 2	**≤0,20**

* for a max. ambient temperature of 40°C

The reference criterion for the most efficient circulating pumps is EEI ≤ 0.20

SIRIUX HOME

High-efficiency circulating pumps
Heating
50 Hz

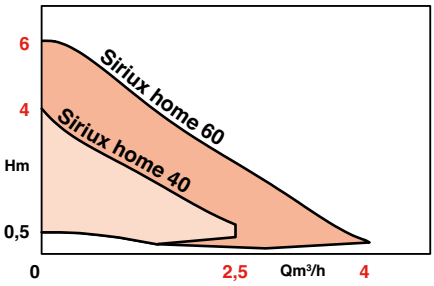

APPLICATIONS

For the accelerated circulation of hot water in heating circuits with duty point optimisation for:

- New or old systems (reconditioning – extension)
- Systems with or without thermostatically controlled valves
- Single-family houses
- Radiators and underfloor heating systems
- Thermosiphon-type systems

BENEFITS

• ENERGY SAVINGS

Circulating pump conforms to the ErP 2013 and 2015 European directive.

Min. consumption: 3 Watt.

Current and cumulative display of electricity consumption of the circulating pump.

"Fine pilot" function for dynamic optimisation of the setpoint value.

• VERSATILITY

Precise setting of differential pressure (TDH - Total Dynamic Head) for optimal energy savings.

2 regulation modes meet the needs of all types of systems.

Ventilating function.

Night mode.

Automatic degumming.

• COMFORT

Eliminates whistling and noise around thermostatically controlled valves.

Automatically adapts its speed to the needs of the heating system.

• INSTALLATION AND ADJUSTMENT

Simple and intuitive setting interface.

Salmson tool-free connector.

Compact size .



• Siriux Home available in 180 mm and 130 mm port-to-port distances

ErP
ENERGY-RELATED PRODUCTS CERTIFIED BY SALMSON®



• Salmson connector

SIRIUX HOME

DESIGN

• Hydraulic part

- Single housing with threaded ports for direct fitting onto pipework.

• Motor

- Single-phase, wet runner, with bearings lubricated by pump fluid.
- Self-regulating, adapts to the pressure required by the system.
- Self-protected: requires no external protection.
- Synchronous motor with ECM (Electronically Commuted Motor) technology, equipped with a permanent magnet rotor. The magnetic field rotating around the stator is created by the electronic commutation of the coils.

This rotating field creates a continuous torque due to the attraction of the opposing magnetic poles of the rotor, by controlling its position (synchronous motor). This ensures optimal motor performance, regardless of its speed.

Protection class:	IPX4D
Max. temperature of the fluid conveyed:	TF 110
ECM conformity:	- 61000-6-1 - 61000-6-2 - 61000-6-3 - 61000-6-4

IDENTIFICATION

Siriux home 4 0 - 25 / 180

- High-efficiency pump
- Residential application
- TDH at 0 m³/h
- DN (nominal diameter) of ports:
- Port-to-port distance of pump housing

BASIC CONSTRUCTION

Main parts	Material
Pump housing	Cast iron
Impeller	Mat. Composite
Shaft-air gap sleeve	Stainless steel
Suction ring Stainless	Stainless steel
Bearings	Graphite
Seal	Ethylene-propylene

BENEFITS

• Energy savings:

- High-efficiency circulating pumps, with duty point optimisation.
- Energy savings of up to 90% compared to a traditional circulating pump.
- Conforms to European Directive: ErP 2013 and ErP 2015.

• Noise control

- Eliminates whistling and hydraulic noise around thermostatically controlled valves.
- The circulating pump's characteristics are automatically adjusted according to the opening and closing of the thermostatically controlled valves.

• Communication interface

- Facilitates settings thanks to its intuitive icons
- Allows for the visualisation of all settings made at a glance
- Makes users aware of energy savings.



• Simple and intuitive settings

- Turn to select an icon or adjust a parameter.



- Press to select a menu or confirm a setting.

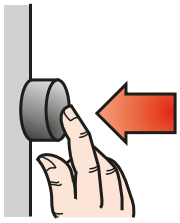



• Salmson connector

- Quick and **tool-free** electrical connections.
- Clear **separation of hydraulic and electrical connections** for improved safety.



SETTINGS

Manometric head setting

2 available sizes of motor:

- **Siriux home 40-****
  - TDH: 0.5 m to 4m
- **Siriux home 60-****
  - TDH: 0.5m to 6m

Automatic slower night mode:

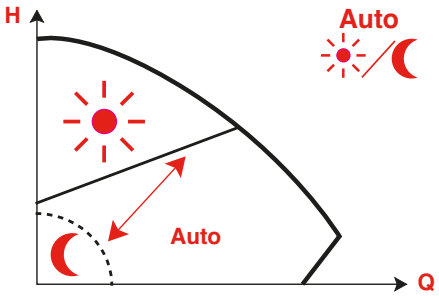



Function activated



Function not activated

Thanks to its temperature sensor, Siriux Home can detect when the boiler is operating in "night" mode.

When Siriux Home detects a significant drop in water temperature, it automatically switches over to its "night" curve to avoid any unnecessary power consumption.

As soon as it detects a temperature rise, Siriux Home switches back to its preset operating curve.

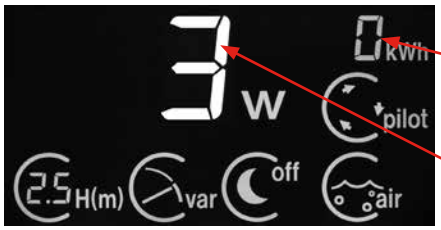

Electricity consumption

- Cumulative electricity consumption of Siriux Home since first use
- Current electrical consumption of Siriux Home

Regulation function:



With this regulation mode, in the event of a drop in flow rate, the differential pressure (manometric head) is reduced electronically, according to the preset differential pressure setpoint value.

Recommended regulation mode for heating installations with thermostatically controlled valves



With this regulation mode, the electronic system keeps the differential pressure of the circulating pump at a constant level regardless of the flow rate, according to the preset pressure setpoint value.

Recommended for underfloor heating systems and Thermosiphon-type systems.

Venting function:



Function activated



Function not activated

First purpose:
When used for the first time, this function allows for the expulsion of air bubbles from the Siriux Home rotor chamber.

Secondary purpose:
This function also supports the venting of the heating system. When operating, it releases air bubbles trapped within the system and conveys them to the highest point in the system (deaerator).

The "venting" function operates for 10 minutes. A countdown is displayed in the upper, right-hand side of the screen. At the end of this ten-minute period, the pump automatically returns to the settings selected previously.

Fine pilot function:



Function activated



Function not activated

When the Fine Pilot function is activated, the pump analyses the heat requirement on the basis of the setpoint value. This analysis allows for the continuous adjustment of the value within the partial load range. The pump power is thus continuously optimised.

The Fine Pilot function can only be activated via a Δp-v regulation mode.

SIRIUX HOME

HYDRAULIC PERFORMANCE

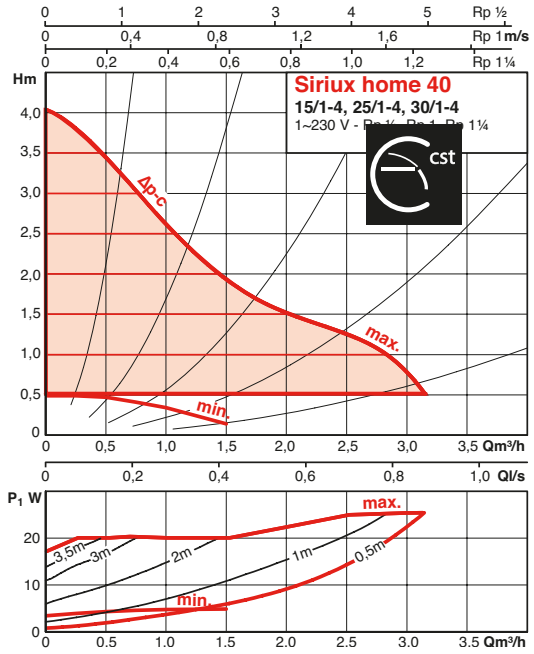

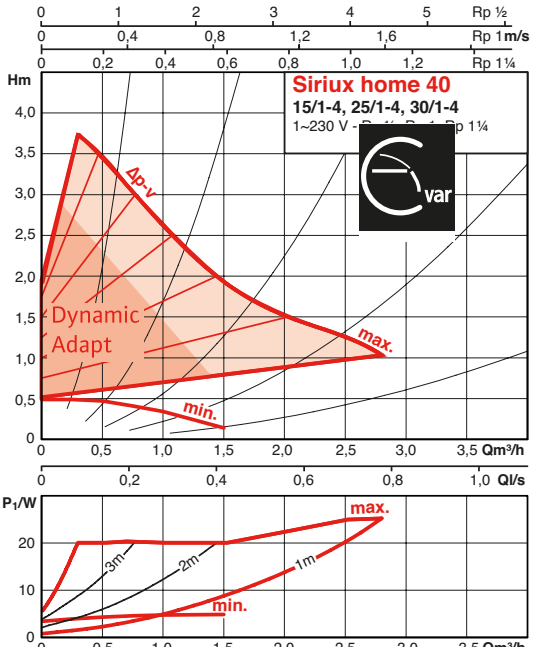

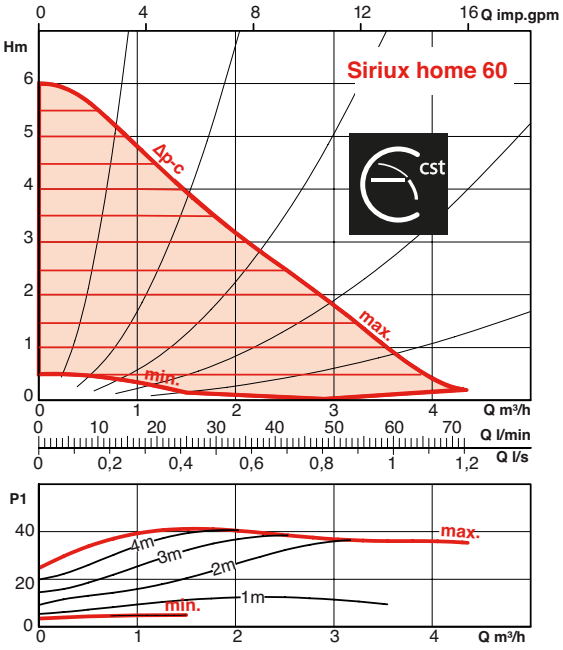

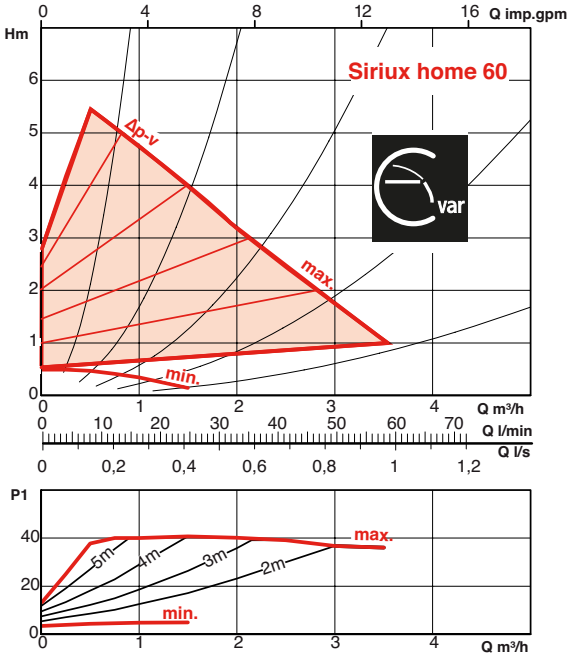

QUICK SETTING HELP

Values given for information only

Heating system	Regulation mode	Size of system	Siriux home
With thermostatically controlled valves	var	Up to 15 radiators	Siriux home 40
		Up to 20 radiators	Siriux home 60
Underfloor heating	cst	Up to 120 m²	Siriux home 40
		Up to 220 m²	Siriux home 60
Thermosiphon-type	cst	-	Siriux home 40

QUICK SETTING HELP

For systems with radiators

Length of most unfavourable loop (outbound & inbound)	Setpoint value					
30 m	1,3	1,3	1,0	1,0	1,2	1,1
40 m	1,5	1,3	1,3	1,0	1,4	1,3
50 m	1,8	1,5	1,5	1,3	1,8	1,7
60 m	2,3	2,0	1,8	2,2	2,0	1,8
80 m	2,5	2,3	2,9	2,6	2,4	
100 m	2,8	2,5	3,2	3,0	2,8	
120 m	3,0	4,0	3,5	3,2		
Flow rate (m³/h)	0,5	1	1,5	2	2,5	3

Siriux home 40 Siriux home 60

For systems with underfloor heating

Outbound & inbound length of PER 16 x 20	Setpoint value						
20 m		1,0			1,0		
40 m	2,0			2,0			
60 m	3,0		3,0				
80 m		4,0					
100 m	5,0						
Flow rate (m³/h)	0,5	1	1,5	2	2,5	3	3,5

Outbound & inbound length of PER 13 x 16	Setpoint value						
20 m		1			1,5		
40 m	3,0		3,0				
60 m	4,5						
80 m							
100 m							
Flow rate (m³/h)	0,5	1	1,5	2	2,5	3	3,5

Siriux home 40 Siriux home 60

NB : These setpoint values are given for information only. The flow rate can be adjusted as follows:
Lowest setpoint value = reduced flow rate
Highest setpoint value = increased flow rate, within the circulating pump's performance limits

ELECTRICAL CONNECTIONS

Quick and tool-free electrical connections

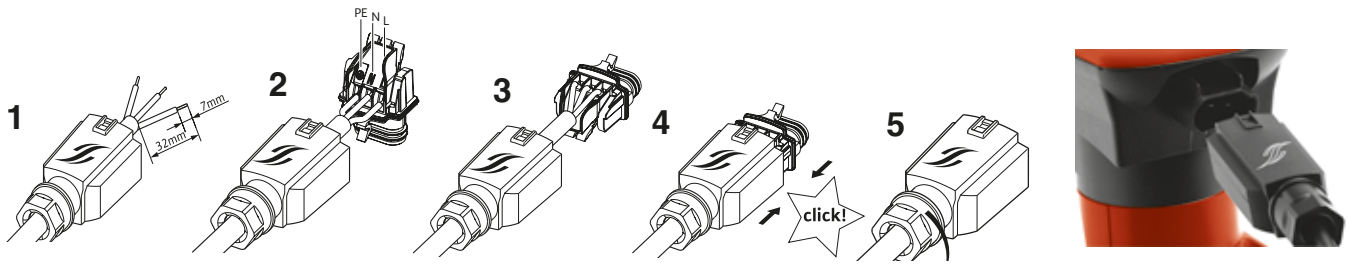

INSTALLATION POSITIONS

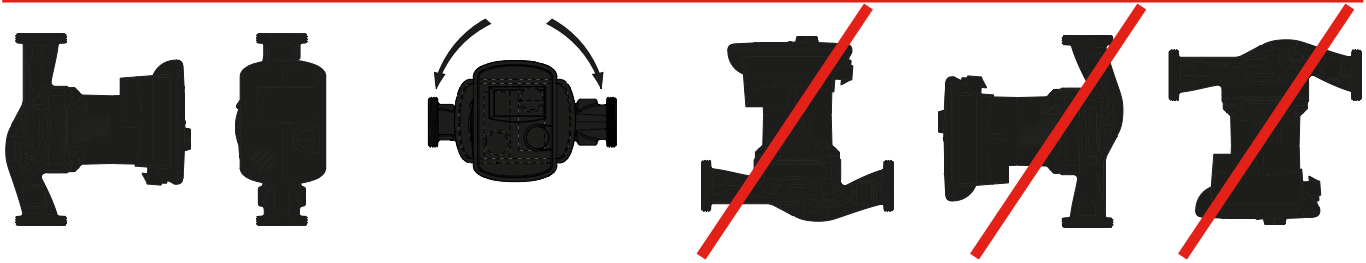

SIRIUX HOME

ELECTRICAL AND DIMENSIONAL SPECIFICATIONS

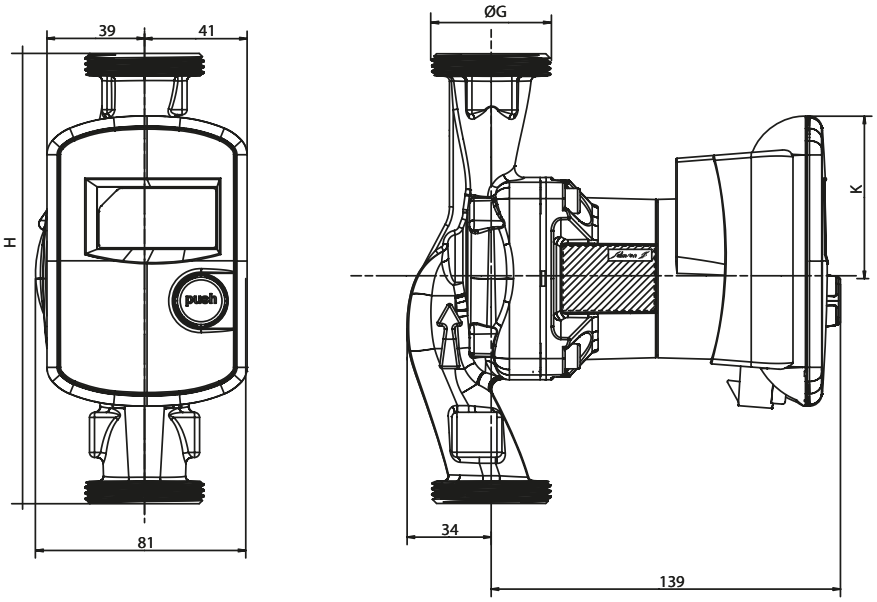

FEATURES

a) Electrical
- 230 V - 50 Hz (60Hz) single-phase
- Motor protection via circuit-breaker is not essential.

b) Fitting
- Axis of motor always horizontal.
- Connection to system via pipe unions.

c) Packaging
- Supplied with connector and gaskets, but without pipe unions.

d) Maintenance
- Standard replacement of the appliance.

Order reference	Motor						Pump			
	P1 (W)		I(A)		Speed (rpm)		H (mm)	K (mm)	Ø G	Weight (kg)
	Min	Max	Min	Max	Min	Max				
Siriux home 40-25 / 180 mm	3W	20W	0,04	0,26	1 200	3 600	180	90	1"1/2	2,3
Siriux home 40-32 / 180 mm									2"	
Siriux home 40-15 / 130mm							130	65	1"	
Siriux home 40-25 / 130mm									1"1/2	
Siriux home 60-25 / 180 mm	3W	40W	0,04	0,44	1 200	4 700	180	90	1"1/2	2,3
Siriux home 60-32 / 180 mm									2"	
Siriux home 60-15 / 130mm							130	65	1"	
Siriux home 60-25 / 130mm									1"1/2	

ACCESSORIES

Order reference	Threaded tube connection				
	1/2"	3/4"	1"	1"1/4	2"
Siriux home 40-25 / 180 mm	_	RED 2027	RU 2634	_	_
Siriux home 40-32 / 180 mm	_	_	RED 2634	RU 3342	RU 4049
Siriux home 40-15 / 130mm	RU 1521	_	_	_	_
Siriux home 40-25 / 130mm		RED 2027	RU 2634	_	_
Siriux home 60-25 / 180 mm	_	RED 2027	RU 2634	_	_
Siriux home 60-32 / 180 mm	_	_	RED 2634	RU 3342	RU 4049
Siriux home 60-15 / 130mm	RU 1521	_	_	_	_
Siriux home 60-25 / 130mm	_	RED 2027	RU 2634	_	_



• Insulation housing Ref.: 4160237



• Adapter rings ØG 1"1/2 - 2" Ref.: 4051850



• Shut-off ball valve RU 2634 - Ref.: 4104734

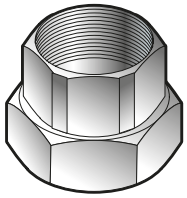

• Pipe union



• 2 m cable with lateral connector (set of 10 units) Réf.: 4164854

PRIUX HOME

High-efficiency circulating pumps
Heating – Air conditioning
50 Hz

OPERATING RANGE

Flow rate of up to	**5 m³/h**
Manometric head of up to	**8 mWC**
Max. operating pressure	**6 bar**
Min. suction pressure	**0,3 bar at 95°C**
Temperature range	**-10°C at 95°C**
Max. ambient temperature	**+40°C**
EEI-Part 2	**≤0,20**

The reference criterion for the most efficient circulating pumps is EEI ≤ 0,20

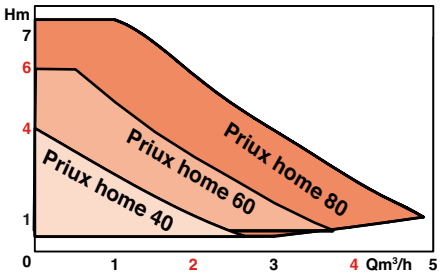

APPLICATIONS

For the accelerated circulation of hot water and iced water in the heating and air-conditioning circuits of single-family houses.

- New and old systems (renovation – extension)
- Installations with and without thermostatically controlled valves
- Installations with radiators and underfloor heating systems
- Thermosiphon-type installations

BENEFITS

- **Completely interchangeable with existing models**
- **Simplified settings**
- **Easy replacement**
- **Installation and maintenance**
- **Energy savings**
- **Noise control**





• Salmson connector

PRIUX HOME

DESIGN

• Hydraulic part

- Single housing with threaded port for direct fitting onto pipework.

• Motor

- Single-phase, glandless, shaft bearings lubricated by the pumped fluid.
- Synchronous motor with ECM (Electronically Commuted Motor) technology, equipped with a permanent magnet rotor. The magnetic field rotating around the stator is created by the electronic commutation of the coils.

Protection class:	IP X2D
Max. temperature of the conveyed fluid:	TF 95
EMC compliance:	- 61000-6-1 - 61000-6-2 - 61000-6-3 - 61000-6-4

IDENTIFICATION

Priux home 4 0 - 25 / 180

- High-efficiency pump
- Residential application
- TDH at 0 m3/h
- DN (nominal diameter) of ports:
- Port-to-port distance of pump housing

BASIC CONSTRUCTION

Main parts	Material
Pump housing	Cast iron
Impeller	Composite material
Shaft, jacket and air gap	Stainless steel
Suction ring	Stainless steel
Shaft bearings	Graphite
Gasket	Ethylene-propylene

BENEFITS

• Energy savings

- Conforms to the European Directive: E rP 2013 and ErP 2015.
- Energy savings of up to 90% compared to old-generation circulating pumps.
- Minimum consumption: 4 watts.
- Display of current consumption.

• Noise control

- Elimination of whistling and hydraulic noises thanks to electronic speed variation.

• Completely interchangeable with existing models

- 3 sizes of motors: 4 m, 6 m and 8 m.
- Two types of port-to-port distances: 130 and 180 mm.
- All types of connections: 1", 1 1/2" and 2".

• Simplified settings

- Just one setting dial.
- LED display of the manometric head.
- Choice of regulation mode according to the installation.

• Easy replacement

- Markings for selecting the manometric head.

• Installation and maintenance

- Requires less space.
- Salmson connector: no tools required
- Automatic degumming.

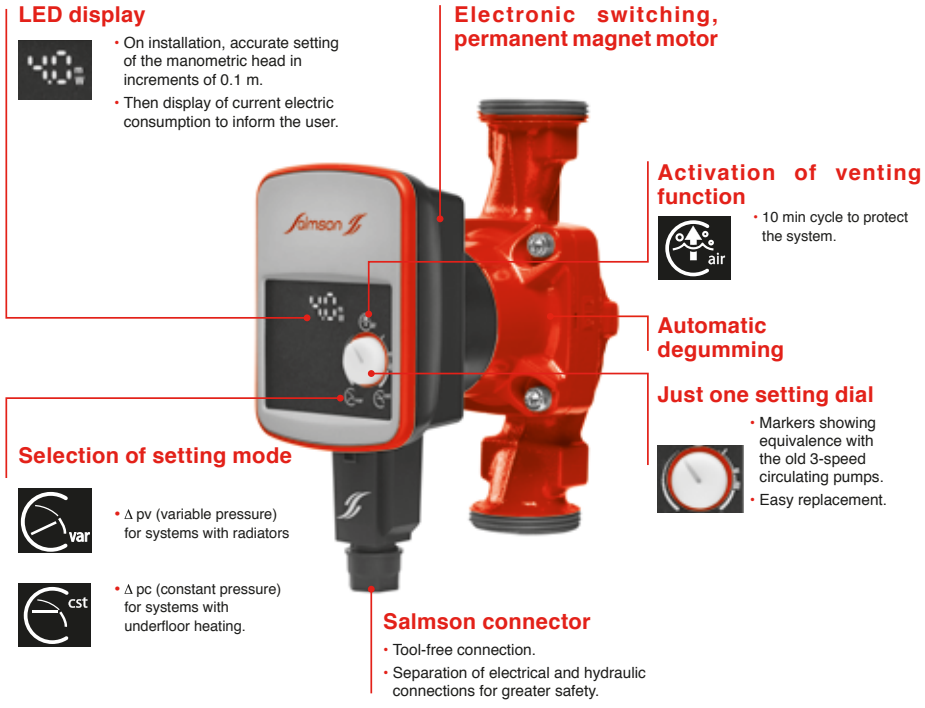

SETTINGS

Setting the Manometric Head

Turning the white dial shows the manometric head in metre on the LED display.

For easier settings, the white dial may be set to the symbols I, II or III on the Δpc scale, which are marker points showing equivalence with the old 3-speed circulating pumps.



Factory setting: ½ max. manometric head - Δpv.

Electricity consumption



In operating mode, the current power consumption is displayed in W.



Regulation function:



With this regulation mode, the differential pressure (manometric head) can be reduced electronically in the event of a reduction in the flow rate, according to the predefined differential pressure setpoint value.

Recommended regulation mode for heating systems with thermostatically controlled valves



With this regulation mode, the differential pressure of the circulating pump is kept at a constant level electronically, regardless of the flow rate, according to the predefined pressure setpoint value.

Recommended regulation mode for installations with an underfloor heating system and for Thermosiphon-type installations.

Venting function:



Primary purpose:
When first started up, this function allows for the venting of air bubbles contained within the Priux home rotor chamber.

Secondary purpose:
This function also supports the venting of the heating system. As it operates, air bubbles trapped within the system are released and then conveyed to the highest point of the system (deaerator).

The "venting" function lasts for 10 minutes. After these 10 minutes, the manometric head must be reset, otherwise the circulating pump will return to the factory setting.

PRIUX HOME

HYDRAULIC PERFORMANCE

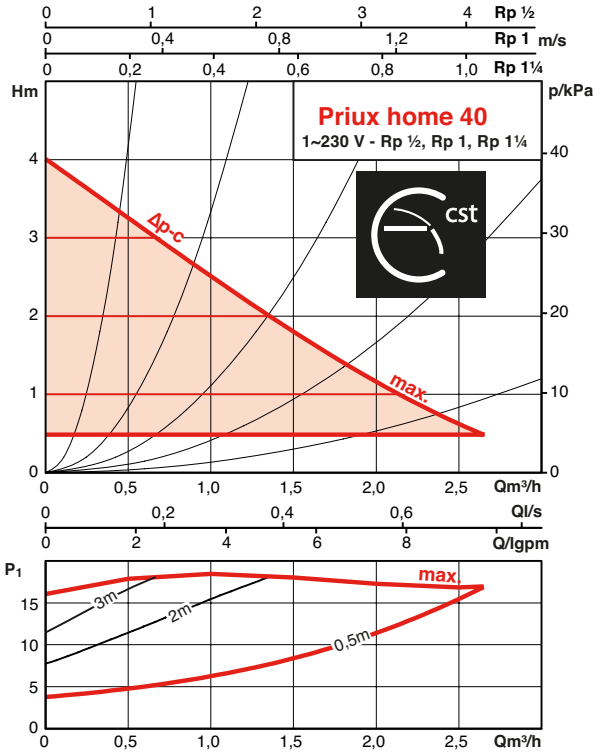

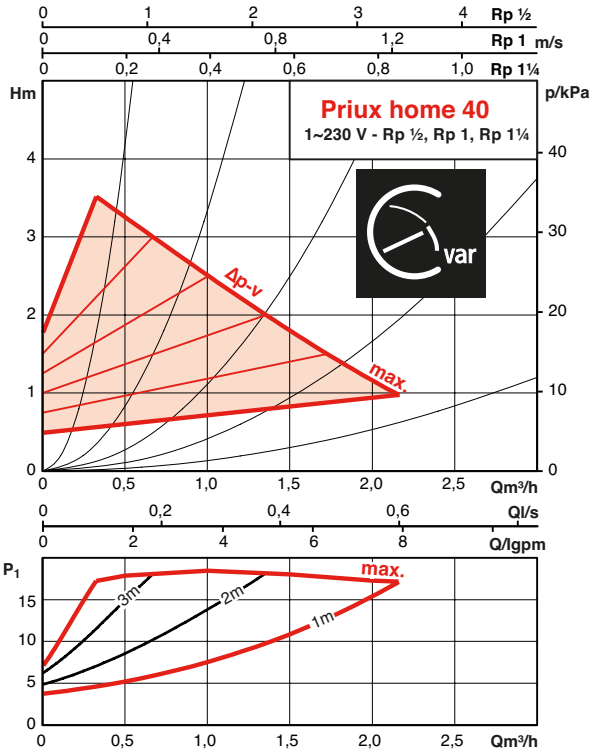

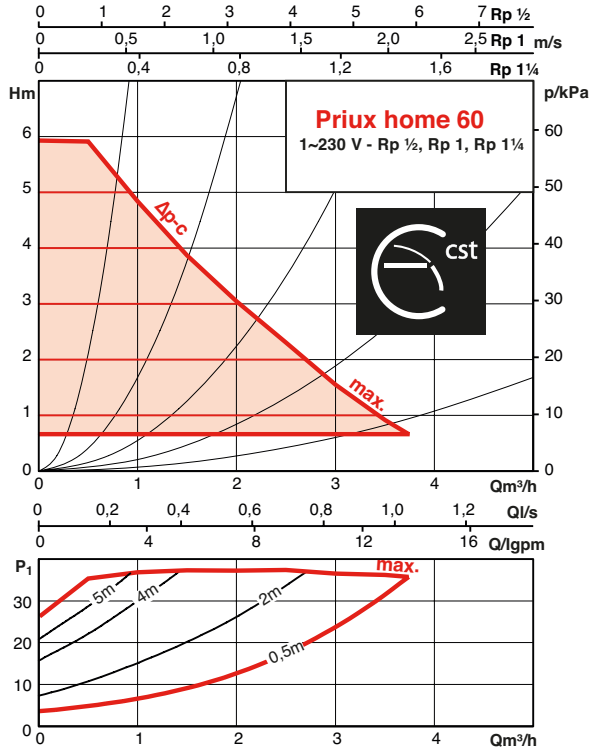

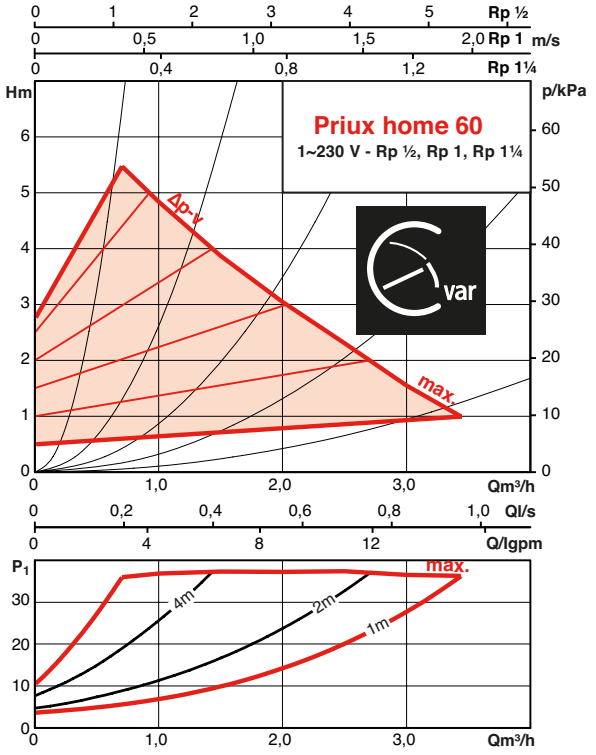

HYDRAULIC PERFORMANCE

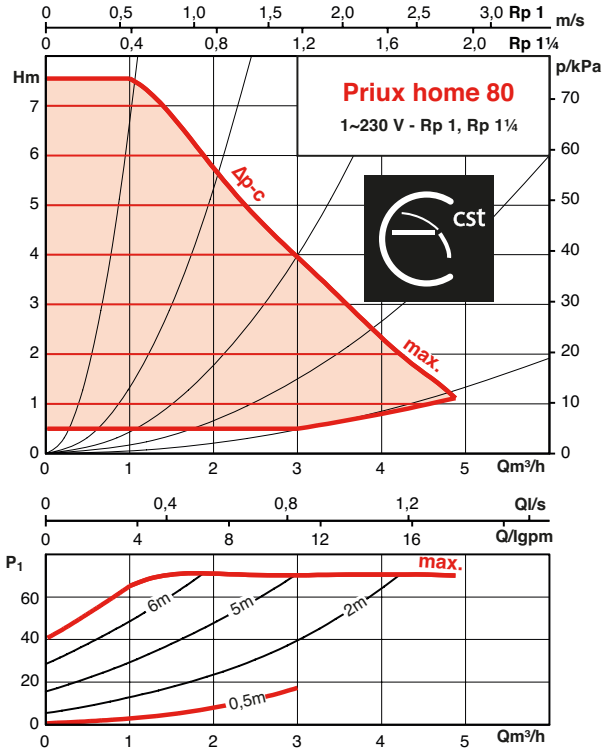

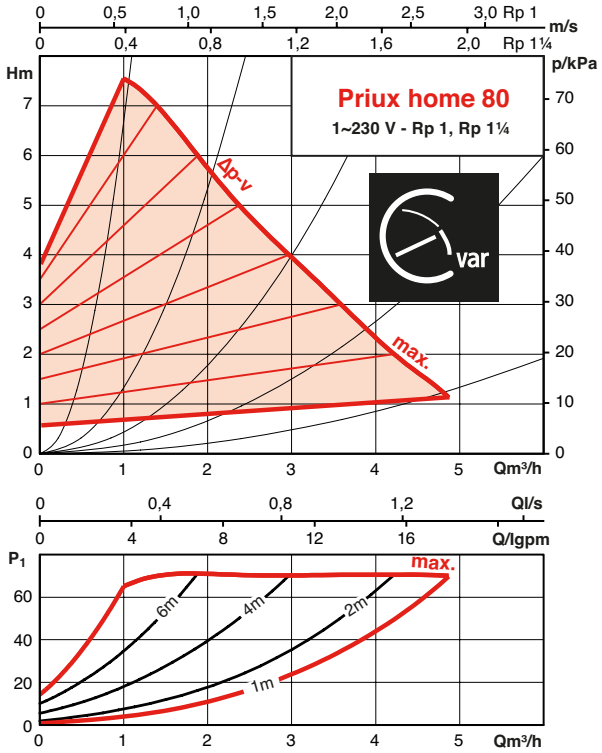

QUICK SETTING HELP

values given for information only

Heating system	Regulation mode	Size of system	Priux home
With thermostatically controlled valves	var	Up to 15 radiators	Priux home 40
		Up to 20 radiators	Priux home 60
		Up to 25 radiators	Priux home 80
Underfloor heating system	cst	Up to 120 m²	Priux home 40
		Up to 220 m²	Priux home 60
		> 220 m²	Priux home 80
Thermosiphon type	cst	-	Priux home 40

PRIUX HOME

QUICK SETTING HELP

For systems with radiators

Outward and inward length of the least favourable loop	Setpoint value setting								
30 m	1,3	1,3	1,0	1,0	1,2	1,1	1,3	1,2	1,2
40 m	1,5	1,3	1,3	1,0	1,4	1,3	1,5	1,3	1,3
50 m	1,8	1,5	1,5	1,3	1,8	1,7	1,7	1,4	1,4
60 m	2,3	2,0	1,8	2,2	2,0	1,8	2	1,8	1,5
80 m	2,5	2,3	2,9	2,6	2,4	2,5	2,4	2,1	
100 m	2,8	2,5	3,2	3,0	2,8	2,9	2,7		
120 m	3,0	4,0	3,5	3,2	3,4	3,3	3	Siriux Master	
140 m	5,6	4,8	4,4	4	3,8	3,6			
160 m	5,9	5,4	4,8	4,4	4,2	4			
180 m	6,6	5,8	5,4	4,8	4,6				
Débit (m³/h)	0,5	1	1,5	2	2,5	3	3,5	4	4,5

Priux home 40 Priux home 60 Priux home 80

For systems with underfloor heating

Outward and inward length of the 16 x 20 CLP loop	Setpoint value setting								
20 m	1,0			1,0			1,0		
40 m	2,0			2,0			2,0		
60 m	3,0			3,0			3,0		
80 m	4,0			4,0					
100 m	5,0			5,0					
120 m	6,0			Siriux Master					
140 m	7,0								
Flow rate (m³/h)	0,5	1	1,5	2	2,5	3	3,5	4	4,5

Outward and inward length of the 13 x 16 CLP loop	Setpoint value setting								
20 m	1			1,5			1,5		
40 m	3,0			3,0			3,0		
60 m	4,5			4,5					
80 m	6,0								
100 m	7,5								
120 m	Siriux Master								
140 m									
Flow rate (m³/h)	0,5	1	1,5	2	2,5	3	3,5	4	4,5

Priux home 40 Priux home 60 Priux home 80

NB : These setpoint values are given for information only; the flow rate can be adjusted in the following manner:
Lowest setpoint value = reduction of flow rate
Highest setpoint value = increased flow rate, within the limits of the circulating pump's performance

ELECTRICAL CONNECTIONS

Quick electrical connections requiring no tools

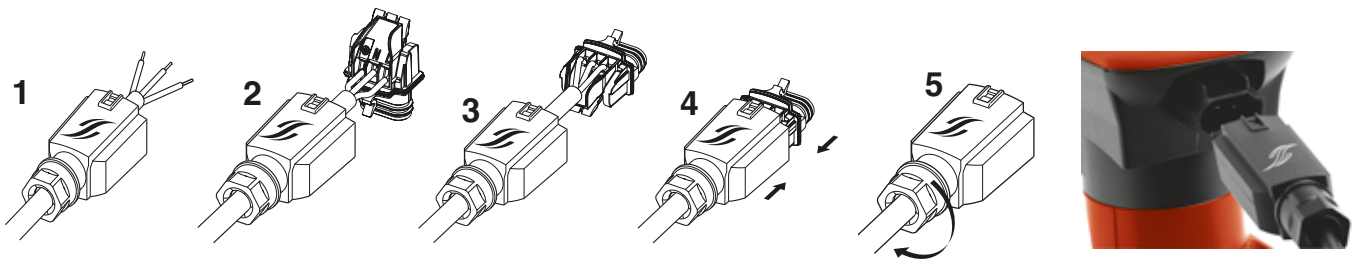

INSTALLATION POSITIONS

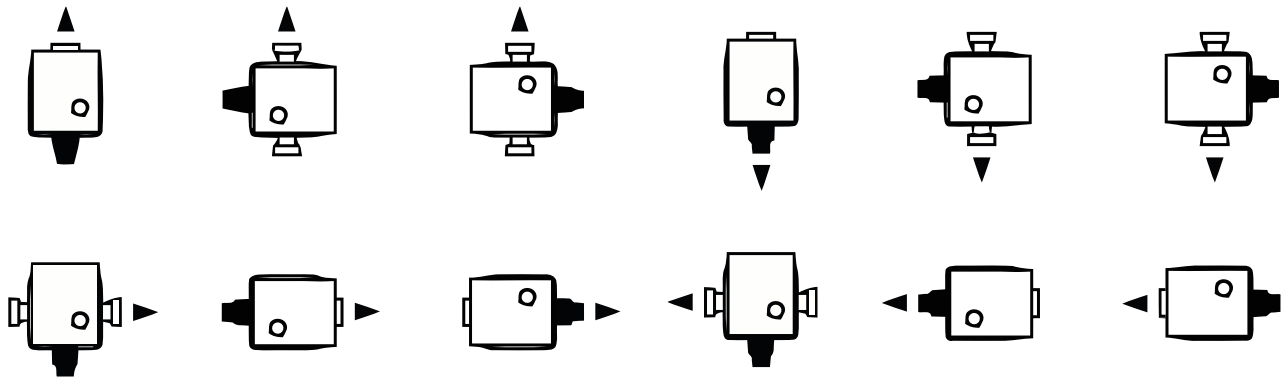

ELECTRICAL AND DIMENSIONAL SPECIFICATIONS

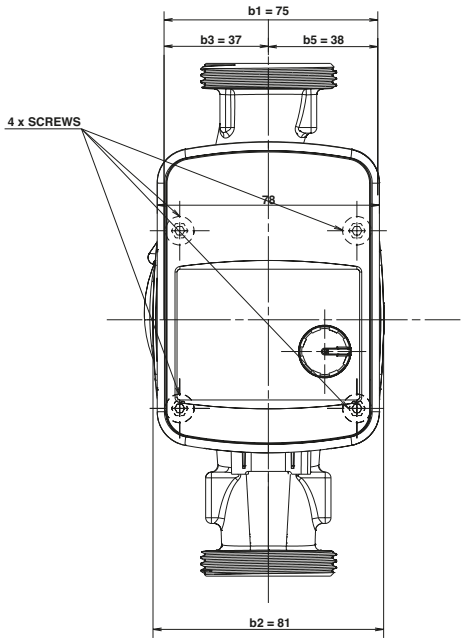

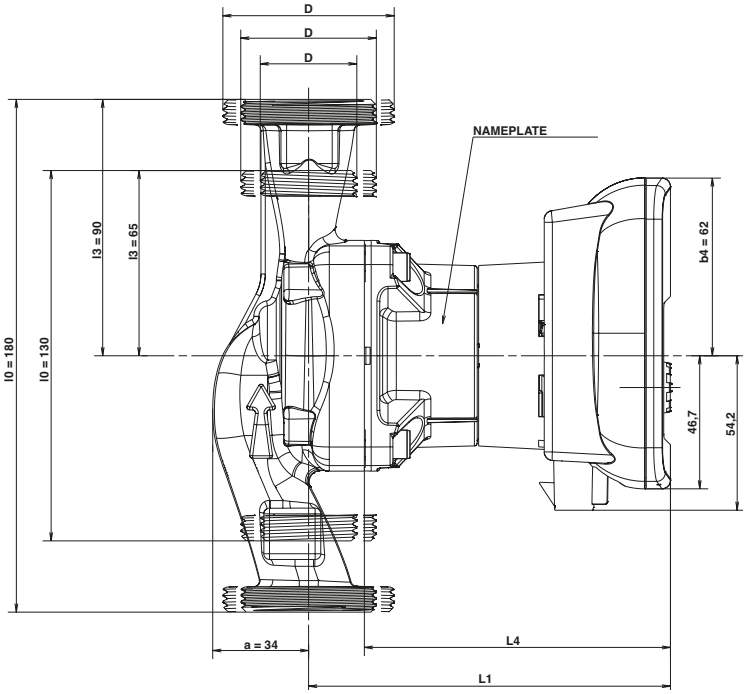

Order reference	Motor						Pump					
	P1 (W)		I(A)		Speed (rpm)		L0 (mm)	L1 (mm)	L3 (mm)	L4 (mm)	Ø D	Weight (kg)
	Min	Max	Min	Max	Min	Max						
Priux home 40-25 / 180 mm	4W	20W	0,04	0,26	800	3600	180	127	90	107	1"1/2	2
Priux home 40-32 / 180 mm											2"	
Priux home 40-15 / 130mm							130	127	65	107	1"	
Priux home 40-25 / 130mm											1"1/2	
Priux home 60-25 / 180 mm	4W	40W	0,04	0,44	800	4700	180	127	90	107	1"1/2	2
Priux home 60-32 / 180 mm											2"	
Priux home 60-15 / 130mm							130	127	65	107	1"	
Priux home 60-25 / 130mm											1"1/2	
Priux home 80-25 / 180mm	4W	75W	0,04	0,66	800	5000	180	135	90	115	1"1/2	2,3
Priux home 80-32 / 180mm											2"	
Priux home 80-25 / 130mm							130	135	65	115	1"1/2	

PRIUX HOME

ACCESSORIES

Order reference	Threaded tube connection				
	1/2"	3/4"	1"	1"1/4	2"
Priux home 40-25 / 180 mm	_	RED 2027	RU 2634	_	_
Priux home 40-32 / 180 mm	_	_	RED 2634	RU 3342	RU 4049
Priux home 40-15 / 130mm	RU 1521	_	_	_	_
Priux home 40-25 / 130mm		RED 2027	RU 2634	_	_
Priux home 60-25 / 180 mm	_	RED 2027	RU 2634	_	_
Priux home 60-32 / 180 mm	_	_	RED 2634	RU 3342	RU 4049
Priux home 60-15 / 130mm	RU 1521	_	_	_	_
Priux home 60-25 / 130mm	_	RED 2027	RU 2634	_	_
Priux home 80-25/180 mm	_	RED 2027	RU 2634	_	_
Priux home 80-32/180 mm	_		RED 2634	RU 3342	RU 4049
Priux home 80-25/130 mm	_	RED 2027	RU 2634	_	_



• ØG 1”1/2 - 2” Adapter rings Ref. 4051850



• Shut-off ball valve RU 2634 - Ref. 4104734

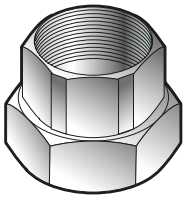

• Pipe union



• Insulating housing Ref. 4160237



• 2 m cable with side connector (in sets of 10) Ref. 4164854

SPECIFICITIES

a) Electrical

- 230 V - 50 Hz single-phase (60Hz).
- Motor protection by a circuit breaker is not essential.

b) Installation

- Motor axis always horizontal.
- Connection to system by pipe unions.

c) Packaging

- Delivered with connector and gaskets, without pipe unions.

d) Maintenance

- Standard exchange of the appliance.

PRIUX HOME B 60-40

High-efficiency flanged circulating pumps
Heating – Air conditioning
50 Hz

OPERATING RANGE

Flow rate of up to	**3,5 m³/h**
Manometric head of up to	**6 mWC**
Max. operating pressure	**6 bar**
Min. suction pressure	**0,3 bar at 95°C**
Temperature range	**-10°C at 95°C**
Max. ambient temperature	**+40°C**
EEI-Part 2	**≤0,20**

The reference criterion for the most efficient circulating pumps is EEI ≤ 0.20

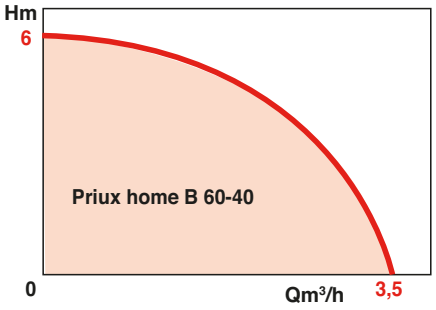

APPLICATIONS

High-efficiency flanged circulating pump, with port-to-port distance of 120 mm. For the accelerated circulation of hot water and iced water in the heating and air-conditioning circuits of single-family houses.

- New and old systems (renovation – extension)
- Installations with and without thermostatically controlled valves
- Installations with radiators and underfloor heating systems
- Thermosiphon-type installations

BENEFITS

- **Interchangeable with the N ZL***13 and NZL***33 models.**
- **Simplified settings**
- **Easy replacement**
- **Installation and maintenance**
- **Energy savings**
- **Noise control**





• Salmson connector

PRIUX HOME B 60-40

DESIGN

• Hydraulic part

- Flanged housing with threaded port for direct fitting onto pipework.

• Motor

- Single-phase, glandless, shaft bearings lubricated by the pumped fluid.
- Synchronous ECM (Electronically Commuted Motor) technology, equipped with a permanent magnet rotor. The magnetic field rotating around the stator is created by the electronic commutation of the coils.

Protection class:	IP X2D
Max. temperature of the conveyed fluid:	TF 95
EMC compliance:	- 61000-6-1 - 61000-6-2 - 61000-6-3 - 61000-6-4

BENEFITS

• Energy savings

- Conforms to the European Directive: ErP 2013 and ErP 2015.
- Energy savings of up to 90% compared to old-generation circulating pumps.
- Minimum consumption: 4 watts.
- Display of current consumption.

• Noise control

- Elimination of whistling and hydraulic noises thanks to electronic speed variation.

• Interchangeability

- Two sizes of motor: 6 m.
- One type of port-to-port distance: 120 mm.
- Types of connections: DN40, flanged.

• Simplified settings

- Just one setting dial.
- LED display of the manometric head.
- Choice of regulation mode according to the installation.

• Easy replacement

- Markings for selecting the manometric head.

• Installation and maintenance

- Requires less space.
- Salmson connector: no tools required
- Automatic degumming.

IDENTIFICATION

Priux home B 60 - 40 / 120

- High-efficiency pump
- Residential application
- Flanged housing
- TDH at 0 m³/h
- DN (nominal diameter) of ports:
- Port-to-port distance of pump housing

BASIC CONSTRUCTION

Main parts	Material
Pump housing	Cast iron
Impeller	Composite material
Shaft, jacket and air gap	Stainless steel
Suction ring	Stainless steel
Shaft bearings	Graphite
Gasket	Ethylene-propylene



SETTINGS

Setting the Manometric Head

Turning the white dial shows the manometric head in m on the LED display.

For easier settings, the white dial may be set to the symbols I, II or III on the Δpc scale, which are marker points showing equivalence with the old 3-speed circulating pumps.



Factory setting: 3 m Δpv.

Electricity consumption



In operating mode, the current power consumption is displayed in W.

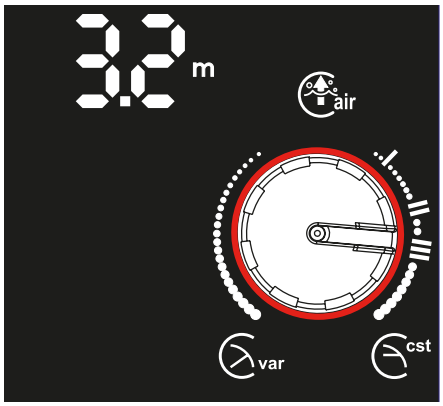

Regulation function:



With this regulation mode, the differential pressure (manometric head) can be reduced electronically in the event of a reduction in the flow rate, according to the predefined differential pressure setpoint value.

Recommended regulation mode for heating systems with thermostatically controlled valves



With this regulation mode, the differential pressure of the circulating pump is kept at a constant level electronically, regardless of the flow rate, according to the predefined pressure setpoint value.

Recommended regulation mode for installations with an underfloor heating system and for Thermosiphon-type installations.

Venting function:



Primary purpose:
When first started up, this function allows for the venting of air bubbles contained within the Priux Home rotor chamber.

Secondary purpose:
This function also supports the venting of the heating system. As it operates, air bubbles trapped within the system are released and then conveyed to the highest point of the system (deaerator).

The "venting" function lasts for 10 minutes. After these 10 minutes, the manometric head must be reset, otherwise the circulating pump will return to the factory setting.

PRIUX HOME B 60-40

HYDRAULIC PERFORMANCE

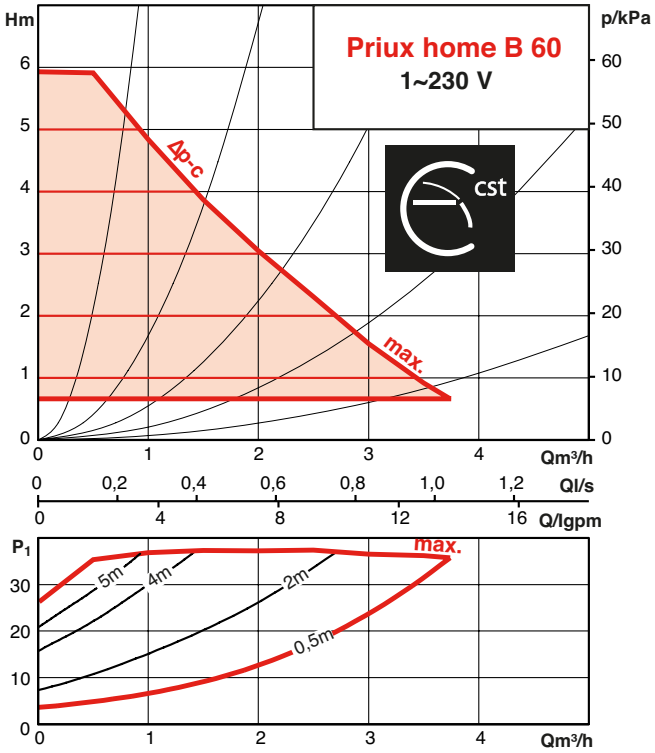

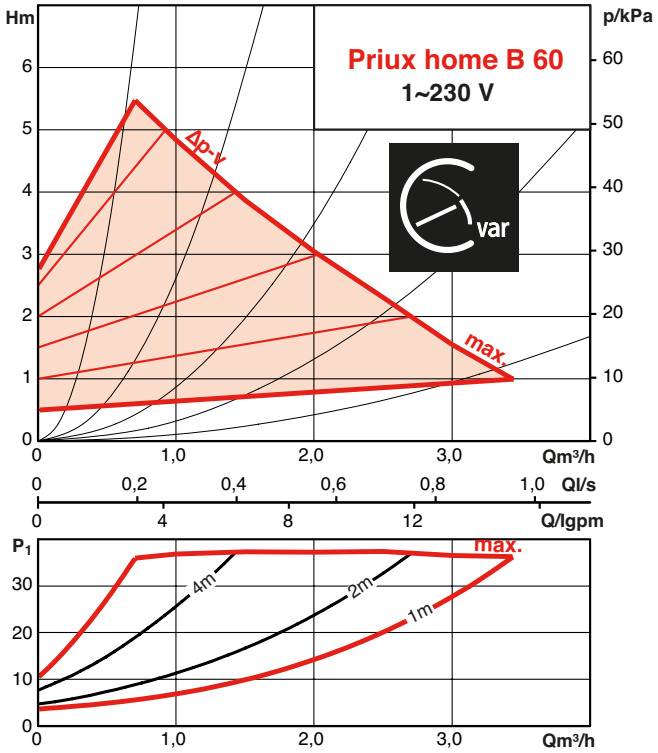

QUICK SETTING HELP

Please refer to Priux Home data

ELECTRICAL CONNECTIONS

Quick electrical connections requiring no tools

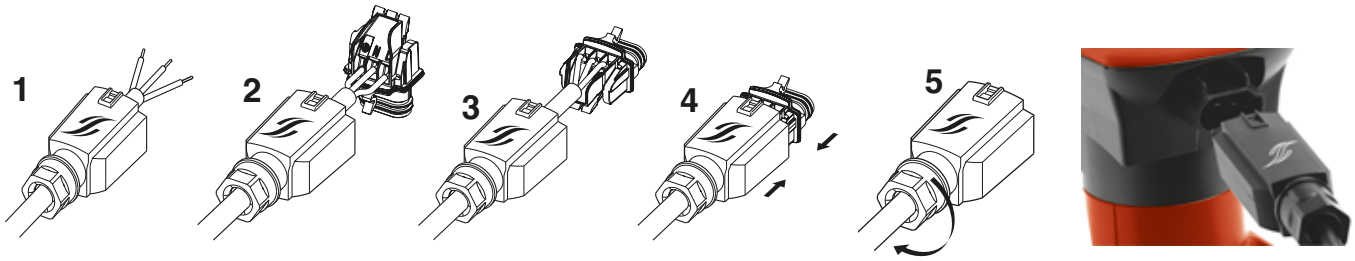

PRIUX HOME B 60-40

INSTALLATION POSITIONS

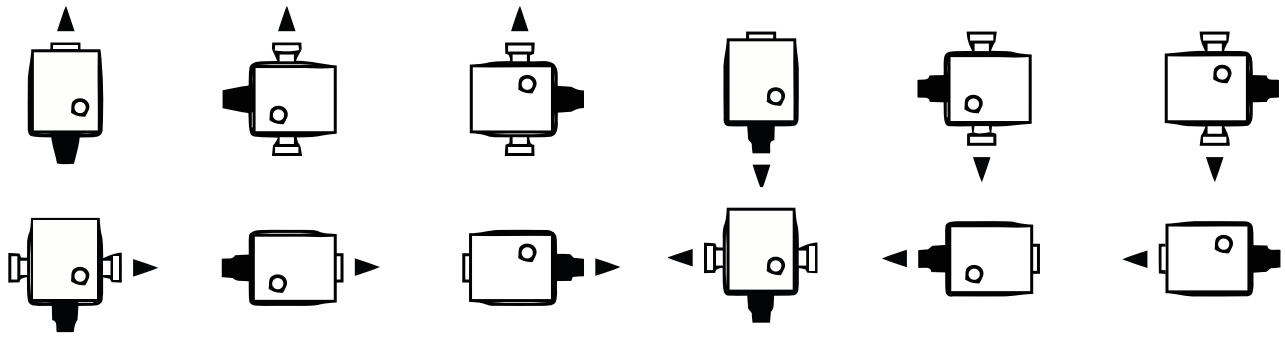

ELECTRICAL AND DIMENSIONAL SPECIFICATIONS

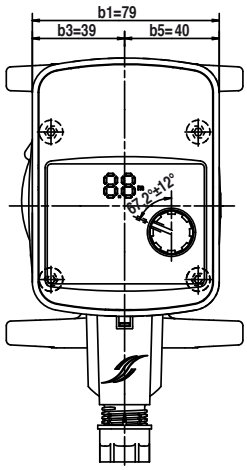

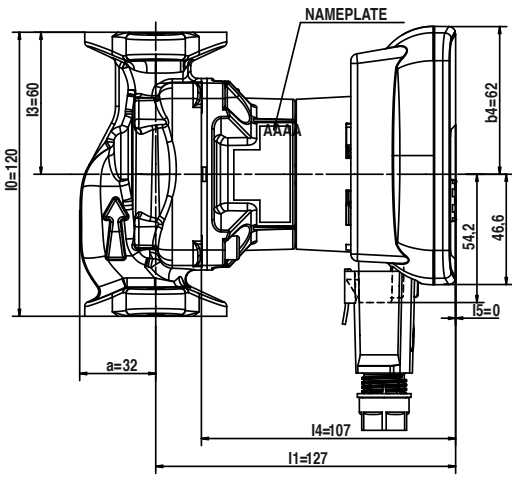

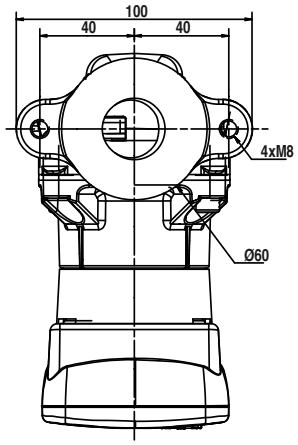

Order reference	Motor						Pump				
	P1 (W)		I(A)		Speed (rpm)		L0 (mm)	L1 (mm)	L3 (mm)	L4 (mm)	Mass (kg)
	Min	Max	Min	Max	Min	Max					
Priux home 60-40 / 120 mm	4W	40W	0,04	0,44	800	4700	120	127	60	107	2,150

PRIUX HOME B 60-40

ACCESSORIES



- Screw-on oval counter-flanges - PN6 - with gaskets and bolts.
  Packet CBOZ 2027.Ref.: 64133
  Packet CBOZ 2634.Ref.: 64134
  Packet CBOZ 3342.Ref.: 4061364



- 2 m cable with side connector (in sets of 10) Ref. 4164854

FEATURES

a) Electrical

- 230 V - 50 Hz single-phase (60Hz).
- Not essential for the motor to be protected by a circuit breaker.

b) Installation

- Motor axis always horizontal.
- Connection to system by pipe unions.

c) Packaging

- Delivered with connector and gaskets, without pipe unions.

d) Maintenance

- Standard exchange of the appliance.

PRIUX HOME D

High-efficiency double circulating pumps
Heating – Air conditioning
50 Hz

OPERATING RANGE

Flow rate of up to	**7 m³/h***
Manometric head of up to	**8 mWC**
Max. operating pressure	**6 bar**
Min. suction pressure	**0,3 bar at 95°C**
Temperature range	**-10°C at 95°C**
Max. ambient temperature	**+40°C**
EEI-Part 2	**Priux home D 60 ≤0.20**
	Priux home D 80 ≤0.25

* 2 pumps running in parallel

The reference criterion for the most efficient circulating pumps is EEI ≤ 0,20

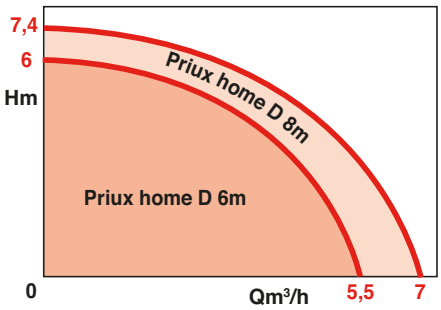

BENEFITS

- **Interchangeable with the CXL 2020 (Priux home D 60-32) and DXM 32-35 (Priux home D 80-32)**
- **Versatility: operation in alternating or parallel mode**
- **Simplified settings**
- **Easy replacement**
- **Installation and maintenance**
- **Energy savings**
- **Noise control**

APPLICATIONS

For the accelerated circulation of hot water and iced water in the heating and air-conditioning circuits of single-family houses and small residential buildings respectively.

- New and old systems (renovation – extension)
- Installations with and without thermostatically controlled valves
- Installations with radiators and underfloor heating systems
- Thermosiphon-type installations





• Salmson connector

PRIUX HOME D

DESIGN

• Hydraulic part

- Double housing with threaded ports for direct fitting onto pipework.

• Motor

- Single-phase, glandless, shaft bearings lubricated by the pumped fluid.
- Synchronous motor with ECM (Electronically Commuted Motor) technology, equipped with a permanent magnet rotor. The magnetic field rotating around the stator is created by the electronic commutation of the coils.

Protection class :	IP X2D
Max. temperature of the conveyed fluid:	TF 95
EMC compliance:	- 61000-6-1 - 61000-6-2 - 61000-6-3 - 61000-6-4

BENEFITS

• Energy savings

- Conforms to the European Directive: ErP 2013 and ErP 2015 (Priux home D 60-32).
- Energy savings of up to 90% compared to old-generation circulating pumps.
- Minimum consumption: 4 watts.
- Display of current consumption.

• Noise control

- Elimination of whistling and hydraulic noises thanks to electronic speed variation.

• Interchangeability

- Two sizes of motor: 6 m and 8 m
- One type of port-to-port distance: 180 mm.
- Type of connection: 2".

• Simplified settings

- Just one setting dial.
- LED display of the manometric head.
- Choice of regulation mode according to the installation.

• Easy replacement

- Markings for selecting the manometric head.

• Installation and maintenance

- Requires less space.
- Salmson connector: no tools required
- Automatic degumming.
- Versatility:
  - operation in alternating/backup mode; a control box (not supplied) must be installed for automatic changeover.
  - operation of both pumps in parallel, for savings on purchase and in operation.

IDENTIFICATION

Priux home D 6 0 - 32 / 180

- High-efficiency Pump
- Residential application
- Double
- HMT at 0 m^3/h
- DN (nominal diameter) of ports
- Port-to-port distance of pump housing

BASIC CONSTRUCTION

Main parts	Material
Pump housing	Cast iron
Impeller	Composite material
Shaft, jacket and air gap	Stainless steel
Suction ring	Stainless steel
Shaft bearings	Graphite
Gasket	Ethylene-propylene

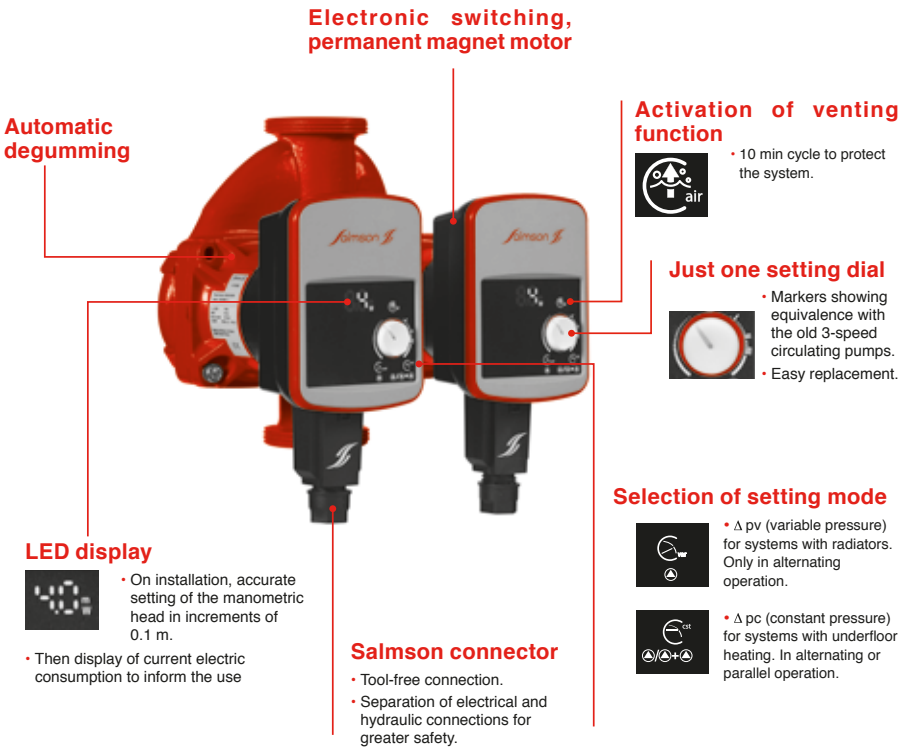

SETTINGS

Setting the Manometric Head

Turning the white dial shows the manometric head in m on the LED display.

For easier settings, the white dial may be set to the symbols I, II or III on the Δpc scale, which are marker points showing equivalence with the old 3-speed circulating pumps.



Factory setting: ½ max. manometric head - Δpv.

Electricity consumption



In operating mode, the current power consumption is displayed in W.

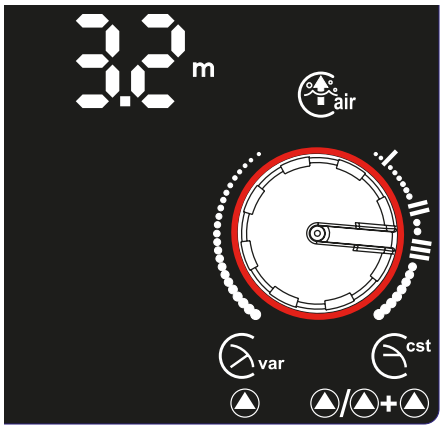

Regulation function:



With this regulation mode, the differential pressure (manometric head) can be reduced electronically in the event of a reduction in the flow rate, according to the predefined differential pressure setpoint value.

Recommended regulation mode for heating systems with thermostatically controlled valves



With this regulation mode, the differential pressure of the circulating pump is kept at a constant level electronically, regardless of the flow rate, according to the predefined pressure setpoint value.

Recommended regulation mode for installations with an underfloor heating system and for Thermosiphon-type installations.

Principle:

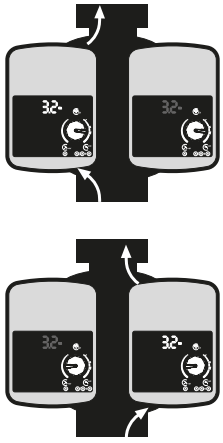

If the pump is operating in alternating/backup mode, the preselected type of regulation and the manometric head setpoint value must be identical.

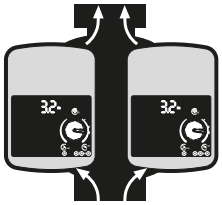

If both pumps are running in parallel mode at the same time, they MUST be set to Δp-c mode and the manometric head selected must be identical.

Venting function:



Primary purpose:
When first started up, this function allows for the venting of air bubbles contained within the Priux home rotor chamber.

Secondary purpose:
This function also supports the venting of the heating system. As it operates, air bubbles trapped within the system are released and then conveyed to the highest point of the system (deaerator).

The "venting" function lasts for 10 minutes. After these 10 minutes, the manometric head must be reset, otherwise the circulating pump will return to the factory setting.

PRIUX HOME D

HYDRAULIC PERFORMANCE

Operation in alternating mode

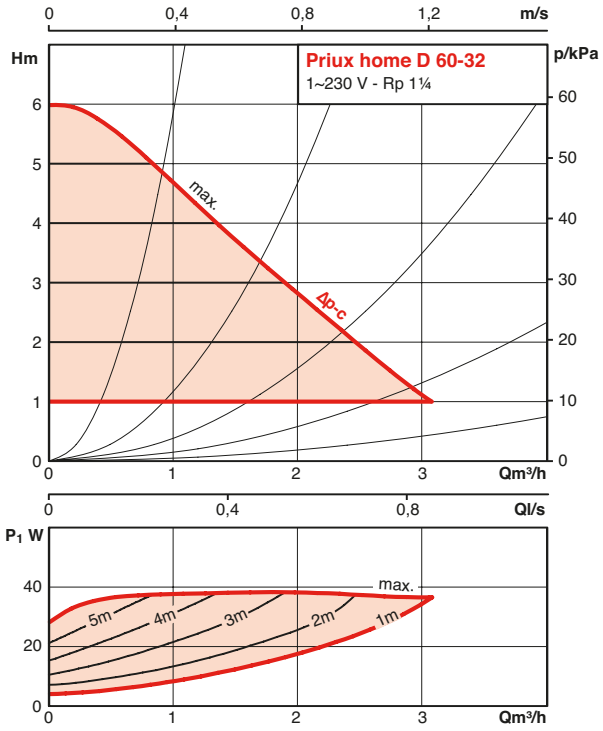

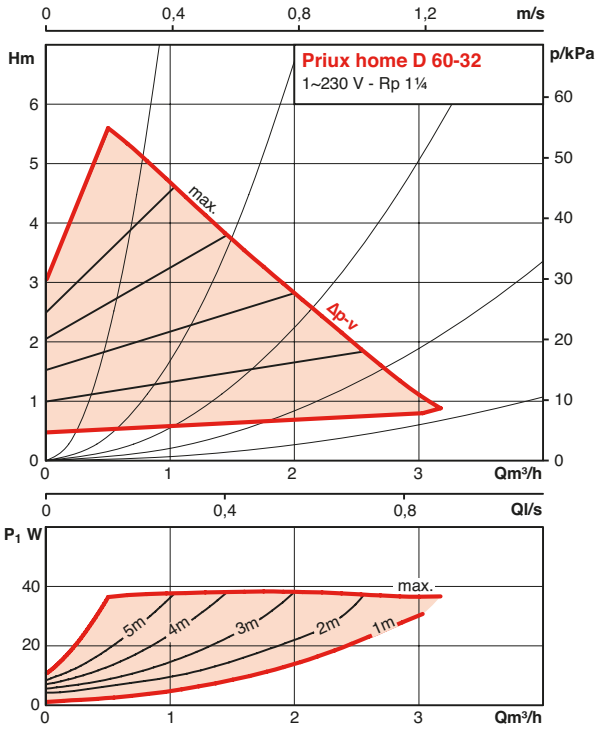

Operation in parallel mode

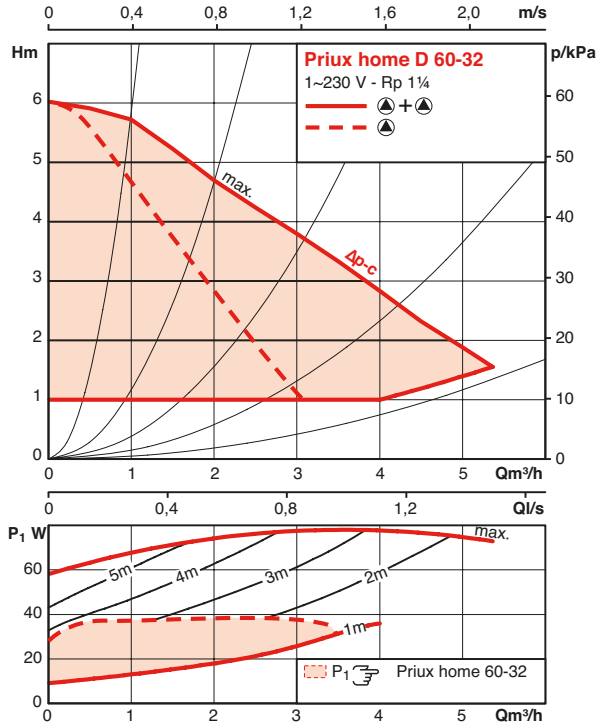

HYDRAULIC PERFORMANCE

Operation in alternating mode

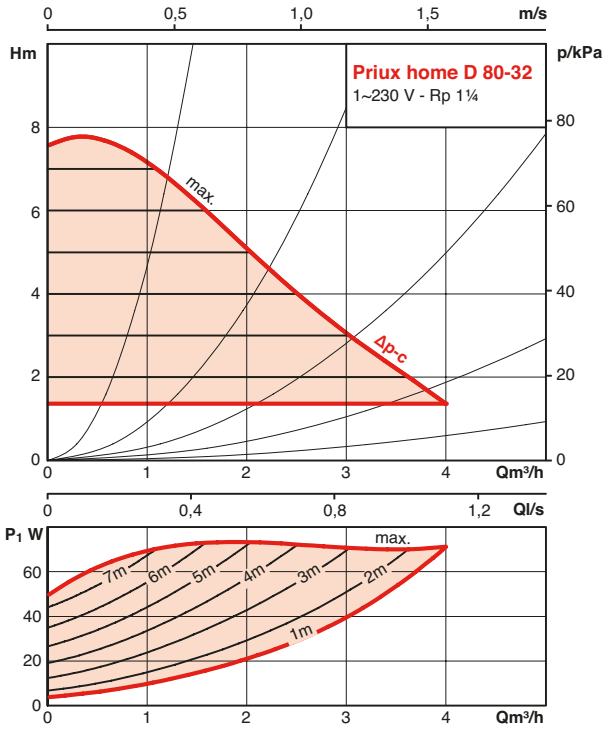

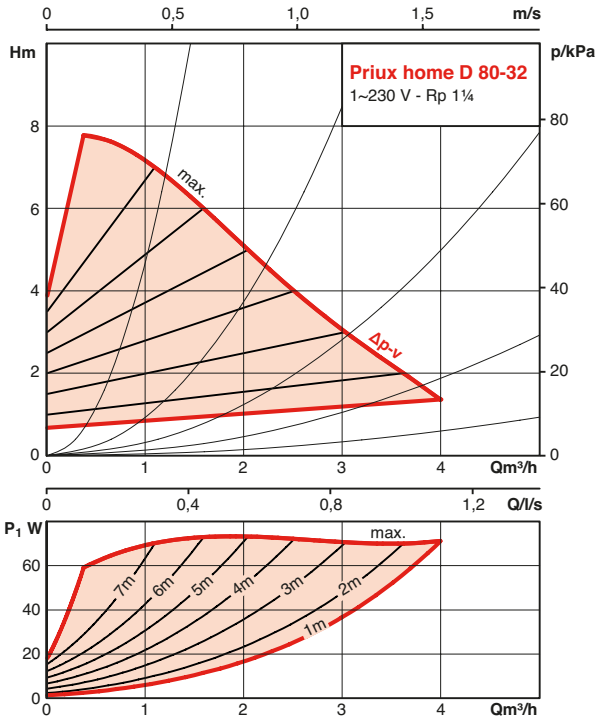

Operation in parallel mode

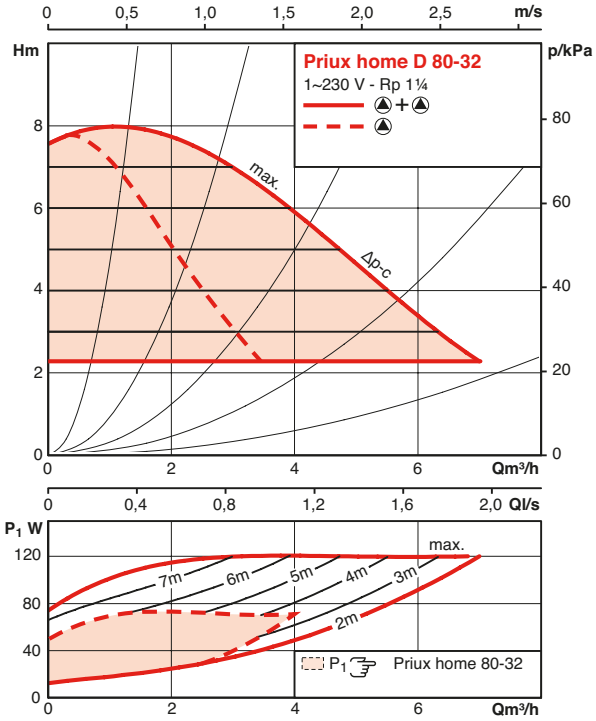

PRIUX HOME D

INSTALLATION POSITIONS

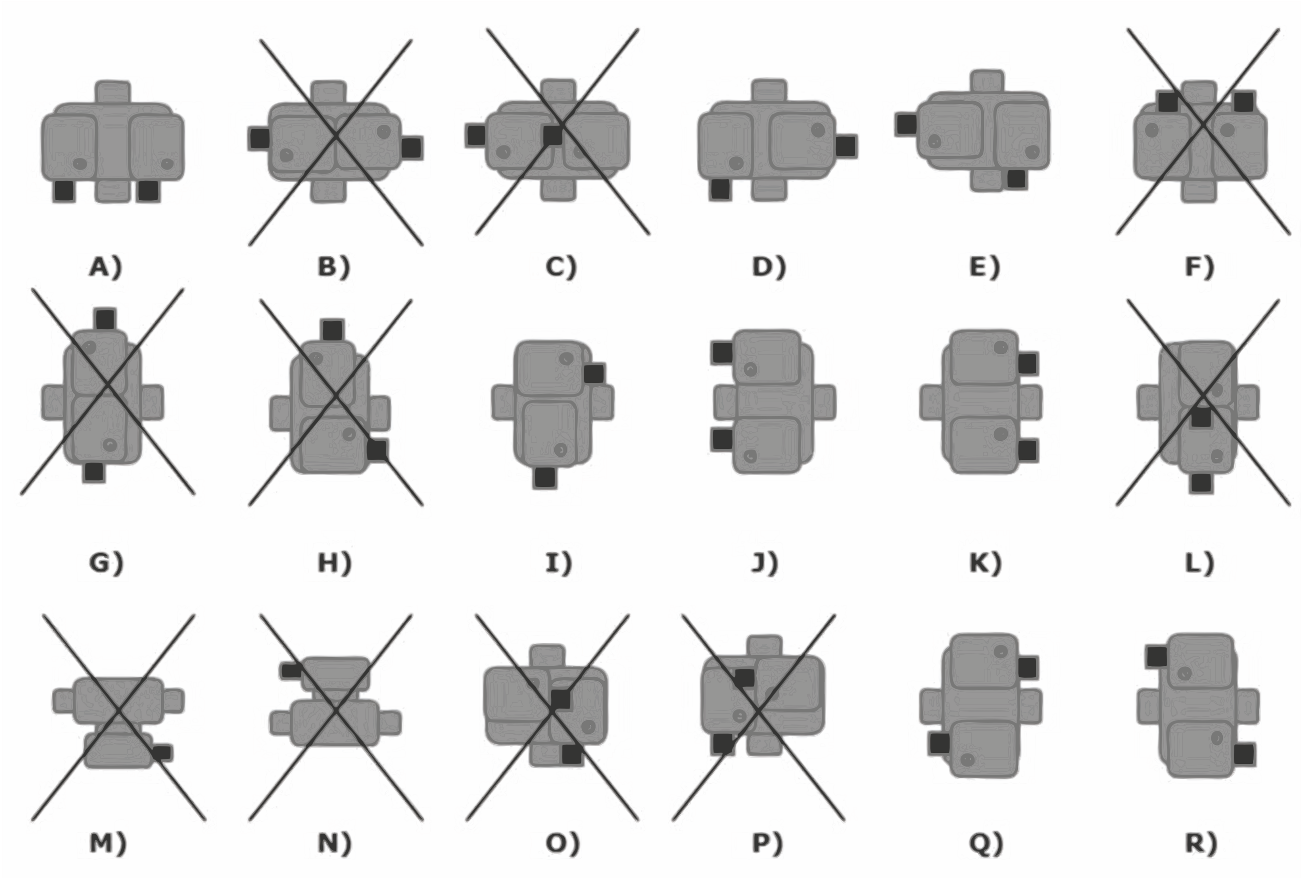

ELECTRICAL CONNECTIONS

Quick electrical connections requiring no tools

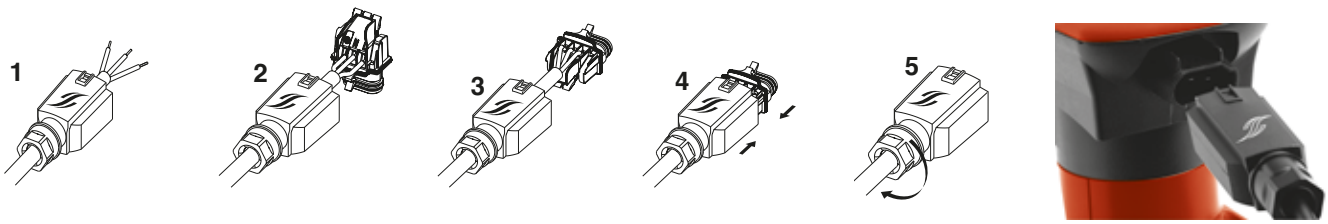

PRIUX HOME D

ELECTRICAL AND DIMENSIONAL SPECIFICATIONS

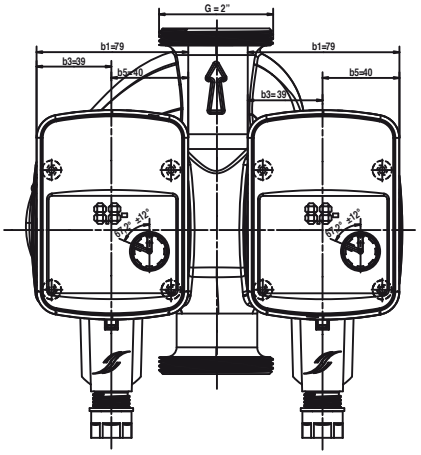

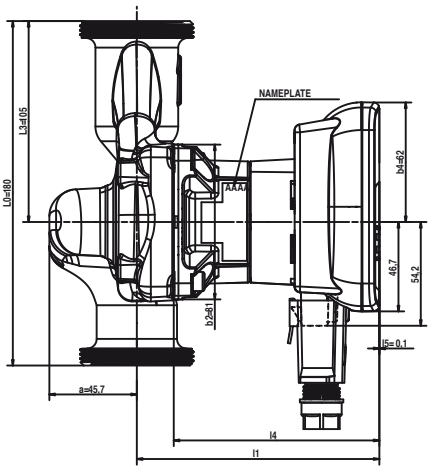

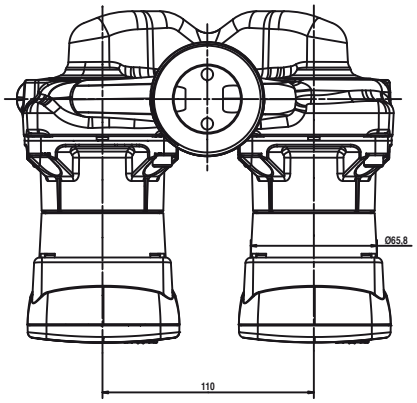

Order reference	Motor						Pump					
	P1 (W)		I(A)		Speed (rpm)		L0	L1	L3	L4	Ø D	Weight
	Min	Max	Min	Max	Min	Max	(mm)	(mm)	(mm)	(mm)		(kg)
Priux home D 60-32 / 180 mm	4W	40W	0,04	0,44	800	4700	180	127	105	107	2"	5,2
Priux home D 80-32 / 180 mm	4W	75W	0,04	0,66	800	5000	180	135	105	115	2"	5,4

ACCESSORIES

Order reference	Threaded tube connection				
	1/2"	3/4"	1"	1"1/4	2"
Priux home D 60-32 / 180 mm	–	–	RED 2634	RU 3342	RU 4049



• Shut-off ball valve
RU 2634 - Ref.: 4104734



• Pipe union



• ØG 1"1/2 - 2" Adapter rings Ref. 4051850



• 2 m cable with side connector (in sets of 10)
Ref.: 4164854

SPECIFICITIES

a) Electrical
- 230 V - 50 Hz single-phase (60Hz).
- Not essential for the motor to be protected by a circuit breaker.

b) Installation
- Motor axis always horizontal.
- Connection to system by pipe unions.

c) Packaging
- Supplied with connector and gaskets, without pipe unions.

d) Maintenance
- Standard exchange of the appliance.
- Spare motor head available as an accessory.

PRIUX HOME D

NOTE

OPERATING RANGE

Flow rate of up to	**3,5 m³/h**
Manometric head of up to	**6 mWC**
Max. operating pressure	**6 bar**
Min. suction pressure	**0,3 bar at 95°C**
Temperature range	**-10°C at 95°C**
Max. ambient temperature	**+40°C**
EEI-Part 2	**≤0,20**

The reference criterion for the most efficient circulating pumps is EEI ≤ 0.20

PRIUX HOME ZOOM

High-efficiency Circulating Pumps with Telescopic Flanges

Heating - Air conditioning

50 Hz

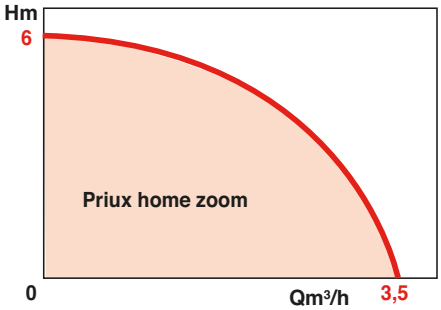

APPLICATIONS

Range of circulating pumps specifically designed for the replacement market. For the accelerated circulation of hot water and iced water in the heating and air-conditioning circuits of single-family houses.

- New and old systems with or without thermostatically controlled valves
- Installations with radiators and underfloor heating systems
- Thermosiphon-type installations

BENEFITS

- **Interchangeable with the ZOOM 225NXL**
- **Simplified settings**
- **Easy replacement**
- **Installation and maintenance**
- **Energy savings**
- **Noise control**



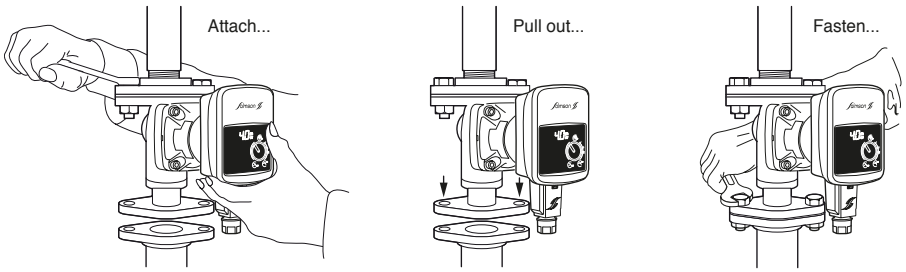

PRIUX HOME ZOOM

DESIGN

• Hydraulic part

- Single, flanged housing with threaded port for direct fitting onto pipework.
- Telescopic flanges allowing for variable height between flanges.
- Special gasket ensures sealing between flange and housing.

• Motor

- Single-phase, glandless, shaft bearings lubricated by the pumped fluid.
- Synchronous motor with ECM (Electronically Commuted Motor) technology, equipped with a permanent magnet rotor. The magnetic field rotating around the stator is created by the electronic commutation of the coils.

Protection class:	IP X2D
Max. temperature of the conveyed fluid:	TF 95
EMC compliance:	- 61000-6-1 - 61000-6-2 - 61000-6-3 - 61000-6-4

IDENTIFICATION

Priux home ZOOM 6 0

- High-efficiency pump
- Residential application
- Variable port-to-port distance
- HMT at 0 m^3/h

BASIC CONSTRUCTION

Main parts	Material
Pump housing	Cast iron
Impeller	Composite material
Shaft, jacket and air gap	Stainless steel
Suction ring	Stainless steel
Shaft bearings	Graphite
Gasket	Ethylene-propyle ne

BENEFITS

• Energy savings

- Conforms to the European Directive: ErP 2013 and ErP 2015.
- Energy savings of up to 90% compared to old-generation circulating pumps.
- Minimum consumption: 4 watts.
- Display of current consumption.

• Noise control

- Elimination of whistling and hydraulic noises thanks to electronic speed variation.

• Completely interchangeable with existing models

- One size of motor: 6 m.
- Port-to-port distance varies between 130 and 225 mm according to the chosen flange (not supplied with the circulating pump).

• Simplified settings

- Just one setting dial.
- LED display of the manometric head.
- Choice of regulation mode according to the installation.

• Easy replacement

- Markings for selecting the manometric head.

• Installation and maintenance

- Allows for the swapping of any circulating pumps without modifying the pipework.
- Requires less space.
- Salmson connector: no tools required
- Automatic degumming.

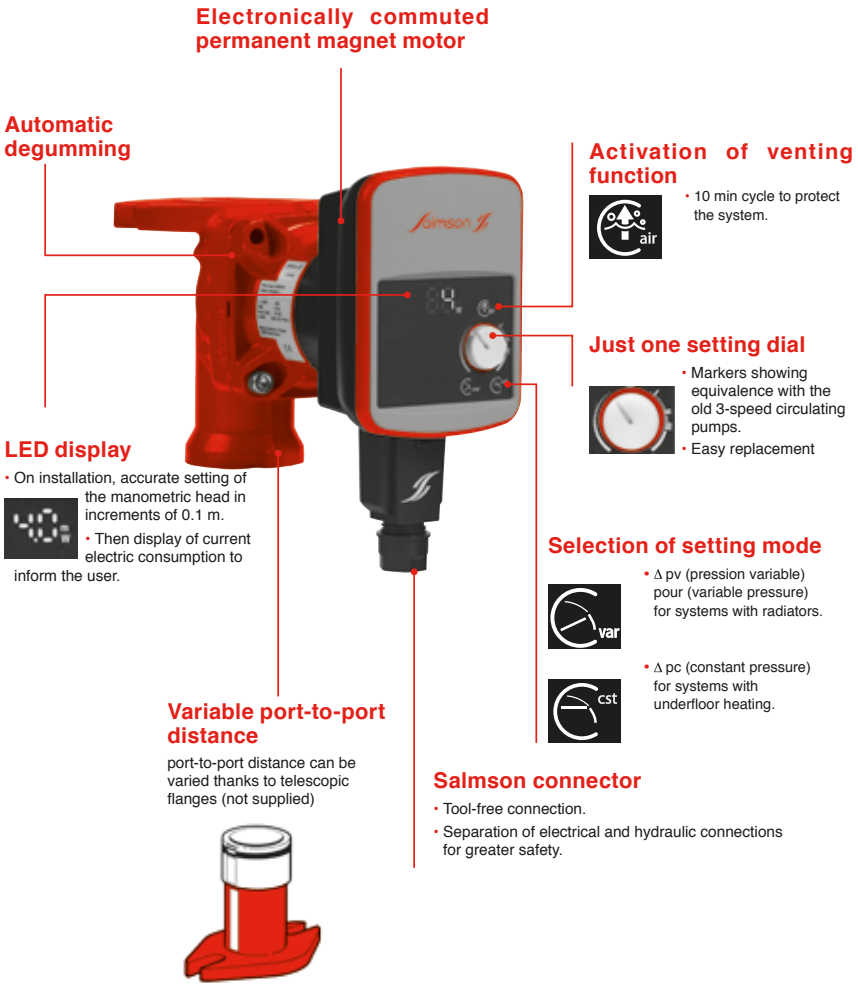

SETTINGS

Setting the Manometric Head

Turning the white dial shows the manometric head in m on the LED display.

For easier settings, the white dial may be set to the symbols I, II or III on the Δpc scale, which are marker points showing equivalence with the old 3-speed circulating pumps.



Factory setting: 3m - Δpv.

Electricity consumption



In operating mode, the current power consumption is displayed in W.

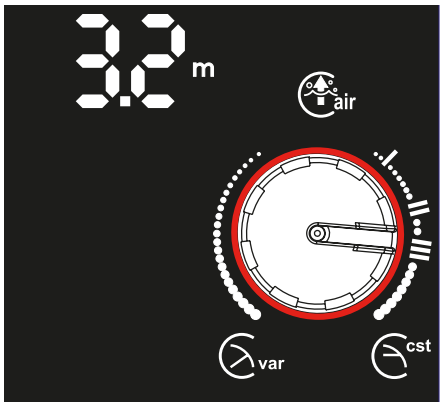

Regulation function:



AWith this regulation mode, the differential pressure (manometric head) can be reduced electronically in the event of a reduction in the flow rate, according to the predefined differential pressure setpoint value.

Recommended regulation mode for heating systems with thermostatically controlled valves



With this regulation mode, the differential pressure of the circulating pump is kept at a constant level electronically, regardless of the flow rate, according to the predefined pressure setpoint value.

Recommended regulation mode for installations with an underfloor heating system and for Thermosiphon-type installations.

Venting function:



Primary purpose:
When first started up, this function allows for the venting of air bubbles contained within the Priux home rotor chamber.

Secondary purpose:
This function also supports the venting of the heating system. As it operates, air bubbles trapped within the system are released and then conveyed to the highest point of the system (deaerator).

The "venting" function lasts for 10 minutes. After these 10 minutes, the manometric head must be reset, otherwise the circulating pump will return to the factory setting.

PRIUX HOME ZOOM

HYDRAULIC PERFORMANCE

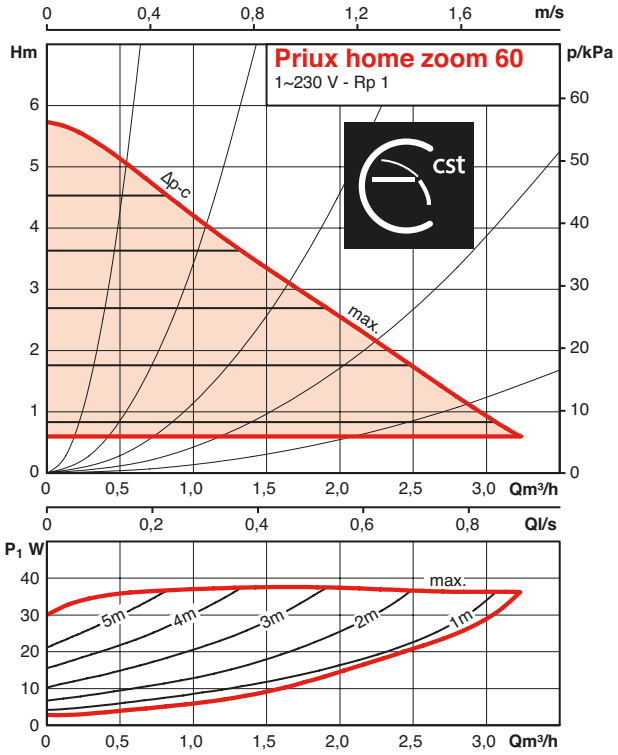

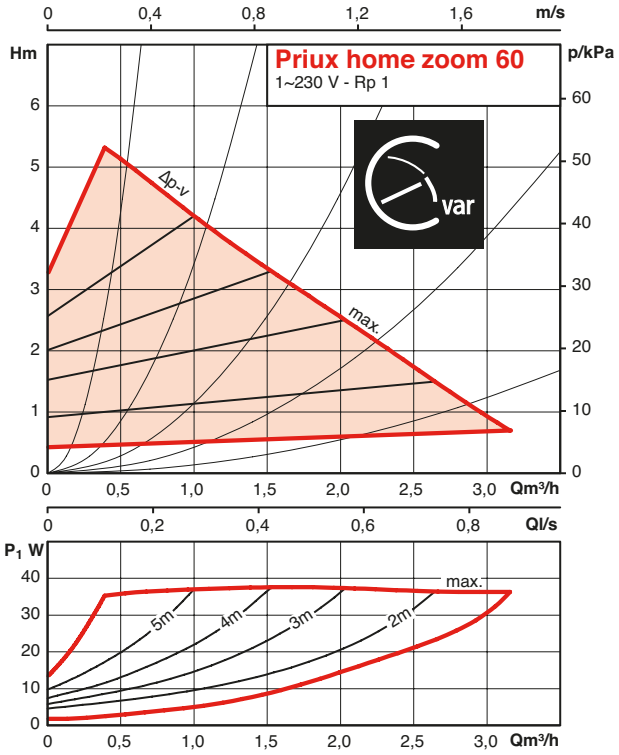

ELECTRICAL CONNECTIONS

Quick electrical connections requiring no tools

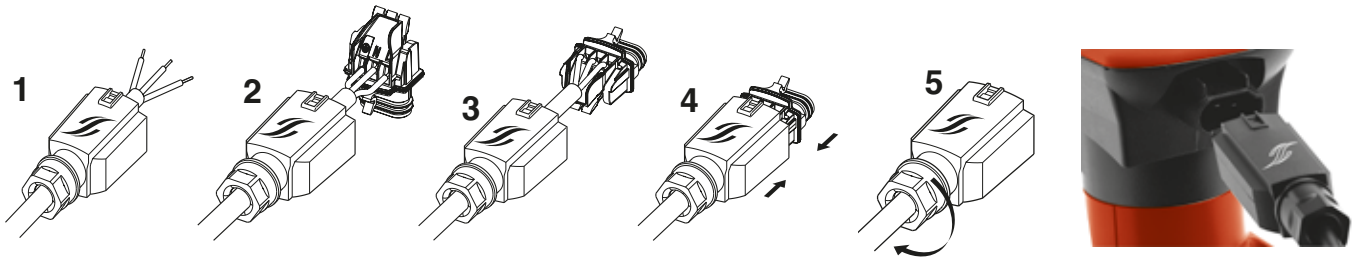

INSTALLATION POSITIONS

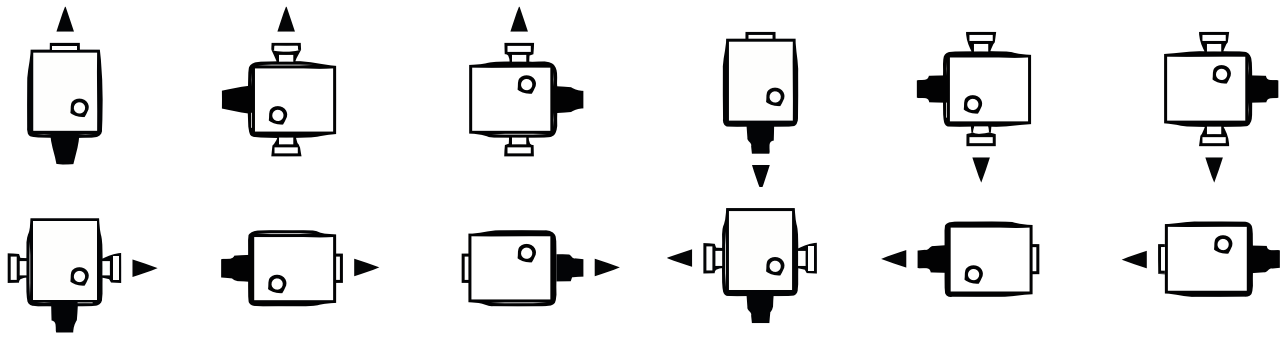

ELECTRICAL AND DIMENSIONAL SPECIFICATIONS

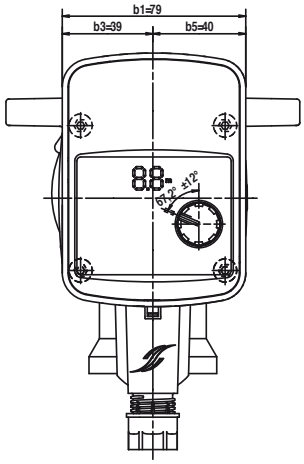

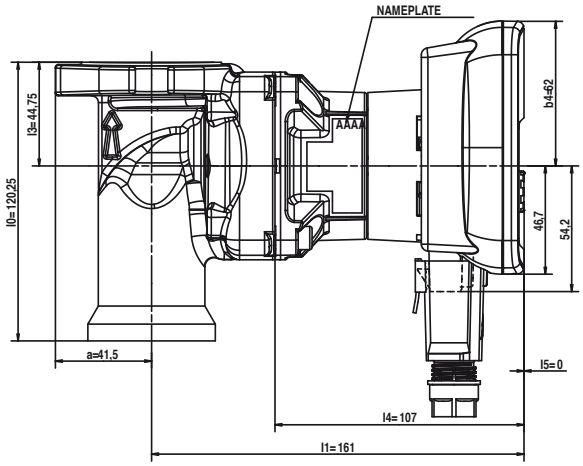

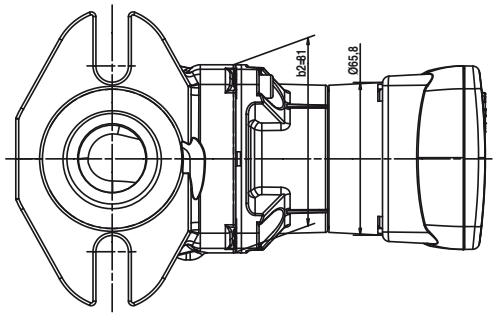

Order reference	Motor						Pump					
	P1 (W)		I(A)		Speed (rpm)		L0* (mm)	L1 (mm)	L3 (mm)	L4 (mm)	Ø D	Mass (kg)
	Min	Max	Min	Max	Min	Max						
Priux home ZOOM 60	4W	40W	0,04	0,44	800	4700	130 / 225 max	161	44,75	107	1" / 1"1/2	2,6

* with flange

The range of circulating pumps to satisfy all needs

The Priux Home ZOOM domestic circulating pump is supplied without a telescopic flange, which is delivered in separate packaging and is not included in the price of Priux Home ZOOM.

We offer a choice of two telescopic flanges: M 76 and M 126, to cover all replacement situations with port-to-port distances of up to 225 mm.

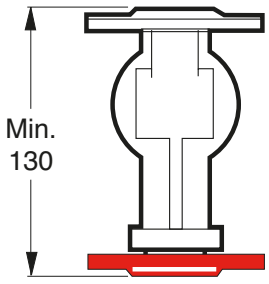

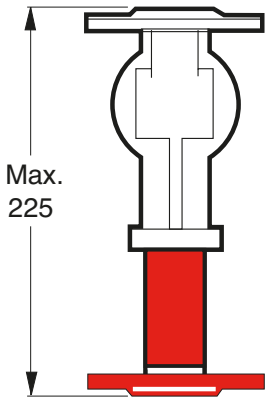

When ordering, clearly state your choice of a telescopic clamps: M 76 or M 126 corresponding to the desired height between clamps.

PRIUX HOME ZOOM

ACCESSORIES

Telescopic clamps

Type	Clamps M76 30921020M	Clamps M126 30921021W

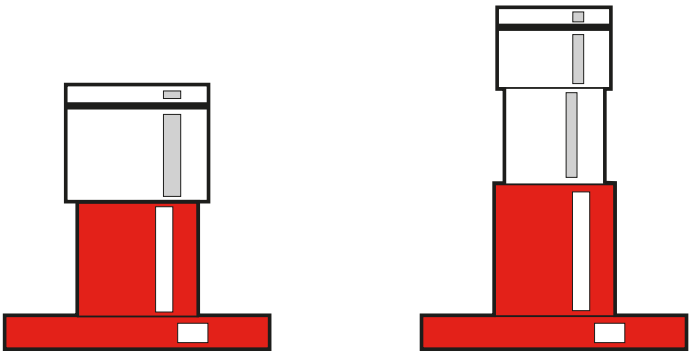

	height between clamps can be adjusted between			
Priux home ZOOM	H mini	H maxi	H mini	H maxi
	130	175	180	225



•Screw-on oval counter-flanges - PN6 - with gaskets and bolts.
Packet CBOV 2634.Réf.: 64129
Packet CBOV 3342.Réf.: 64130
Packet CBOV 4049.Réf.: 64131



• 2 m cable with side connector (in sets of 10)
Ref. 416 4854

SPECIFICITIES

a) Electrical

- 230 V - 50 Hz single-phase (60Hz).
- Motor protection by a circuit breaker is not essential.

b) Installation

- Motor axis always horizontal.
- Connection to system via PN6 oval counter-flanges.

If the circulating pump to be replaced by a Priux Home ZOOM is equipped with pipe unions, they must be replaced with screw-on oval counter-flanges or round screw-on or weld-on counter-flanges (not supplied).

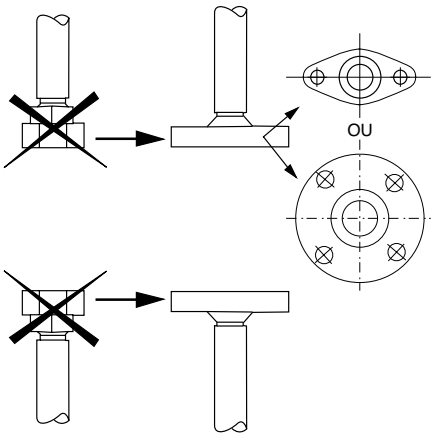

c) Packaging

- Supplied with connector and gaskets, without counter-flanges and without a telescopic flange.

d) Maintenance

- Standard exchange of the appliance.

OPERATING LIMITS

Flow rate up to	5,5 m³/h
Head up to	11 m
Max. operating pressure	10 bar
Temperature range	- 10 °à + 110°C
Max. temperature level peak	+ 140 °C
Max. ambient temperature	+ 40°C

GEOSUN

RENEWABLE ENERGY CIRCULATORS
Solar and geothermal applications
50 Hz

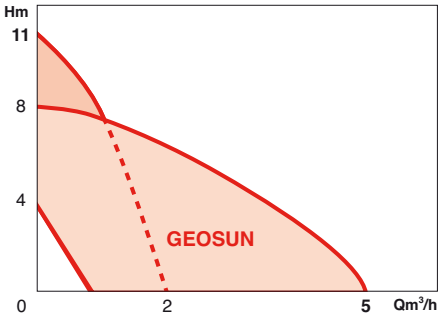

APPLICATIONS

For the accelerated circulation of heating water
in the primary circuits of applications using renewable energies

SOLAR
- Sanitary solar applications
- Combined solar applications (heating and sanitary)

GEOTHERMAL
- For collection surface of up to 400 m²
- All types of domestic heating floor

ADVANTAGES

- **Polyvalence: suitable for solar and geothermal applications.**
- **Low-consumption motor (B class technology according to model).**
- **Condensate-water resisting pump housing (cataphoretically treated).**
- **Antifreeze-resisting (glycol up to 50%).**
- **Peak temperature accepted up to 140°C.**
- **Paint without solvent.**
- **A solution to every requirement (180mm/130mm – connexions 1'' / 1/2'' etc.)**
- **Eco-design development of the GEOSUN range.**





Energy saving
Latest generation
low-consumption motor

Ecological paint: without solvent
- Casing: cataphoresis
- Motor : water-soluble paint

Packaging
Made from recycled cardboard

Plastic bag
Plastic bag with compression gland removed

Manual instruction
The paper is obtained from sustainably managed forests

The SALMSON commitment
Environmental certification of the production factory based in France: ISO 14001

GEOSUN

DESIGN

• Motor

- 3 speeds by manual selection, easily accessible.
- Single phase, countersunk rotor, radial bearings lubricated by pumped fluid.
- Self-protected: does not require external protection

Supply :	230V
Frequency:	50 Hz
Protection index :	IP 42
Max fluid temperature :	TF 110
(except GEOSUN 73:	TF 95)
Max temperature of liquid transmitted	140°C
CEM compliance : emission	61000-6-3
immunity	61000-6-2

STANDARD CONSTRUCTION

Main parts	Material
Pump casing	Cataphoresis cast iron
Impeller	Composite
Shaft	Stainless steel
Suction ring	Stainless steel
Bearings	Graphite
Seals	Ethylene propylene

IDENTIFICATION

GEOSUN HXL 43-25

- Renewable energy range
- HX : 180 mm / HY : 130 mm
- Pressure head at 1m³/h
- 3 speeds
- Suction orifices Ref.

SELECTION OF GEOSUN ACCORDING TO APPLICATION



1	**SOLAR PANEL SURFACE**	< 20 m²	30 m²	35 m²	40 m²	50 m²
	GEOSUN adapted to installation	Geosun 43	Geosun 53	Geosun 63	Geosun 83	Geosun 103
2	**HEATING FLOOR SURFACE**	< 140 m²	220 m²	320 m²		
	GEOSUN adapted to installation	Geosun 43	Geosun 53	Geosun 63		
3	**COLLECTING SURFACE**	320 m²	400 m²			
	GEOSUN adapted to installation	Geosun 63	Geosun 73			

ROBUSTNESS

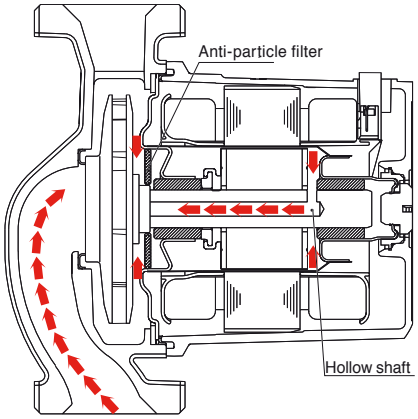

Anti-blocking securities

1st safety device*

Particle filter avoiding particles inside the motor chamber.

2nd safety device

Double stream flow with hollow shaft:

- Anti-jamming
- Degassing of the rotor chamber

Corrosion resistant

The cataphoresis coated body of the pump provides a high level of corrosion resistance.

Perfectly adapted to condensed water.

* Except circulators 83 and 103

SIMPLE, RAPID INSTALLATION

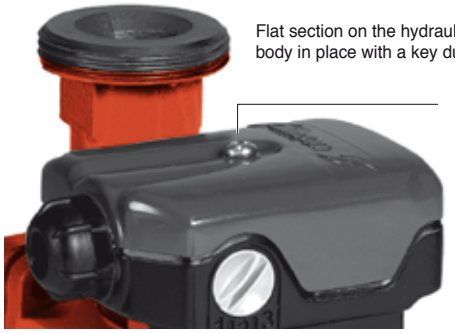

Flat section on the hydraulic body to hold the body in place with a key during installation.

Captive screw on lid

Removable stuffing box and condenser

Ground, phase and neutral in line

Quick electrical connections

Electrical connections on both sides of terminal box possible

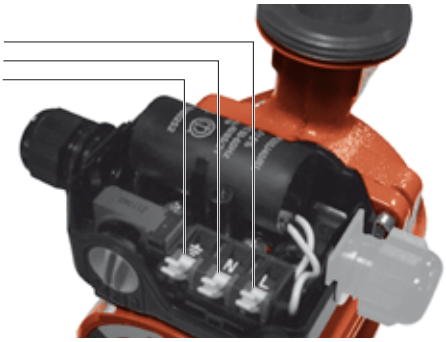

HYDRAULIC PERFORMANCES

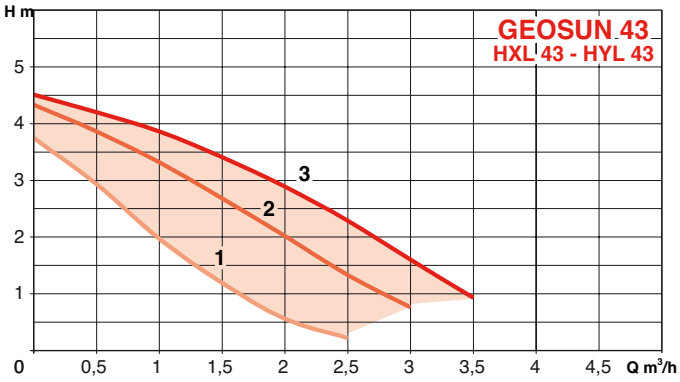

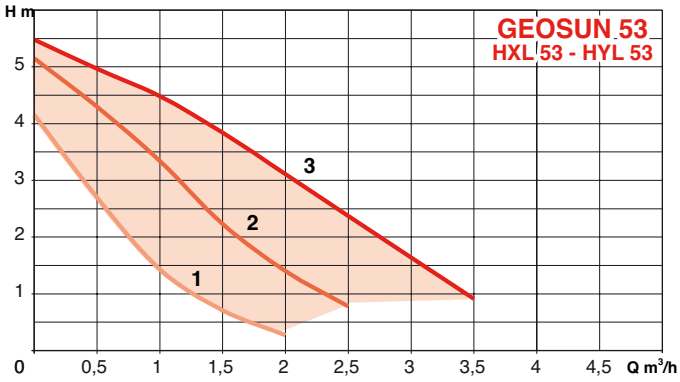

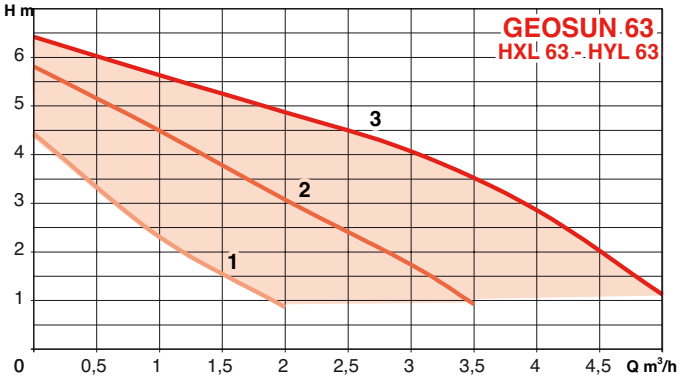

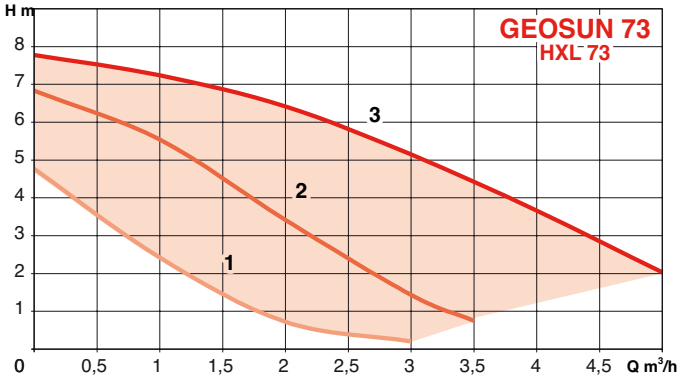

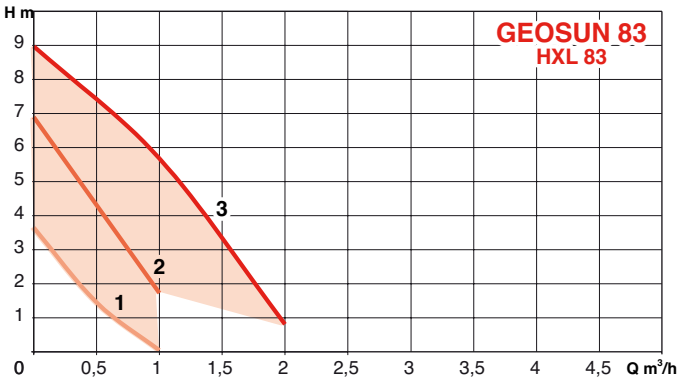



ASSEMBLY POSITION

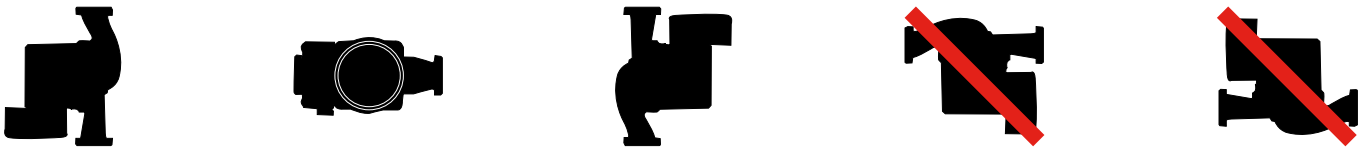

GEOSUN

CHARACTERISTICS

• GEOSUN HXL 43/53/63/73
180 mm

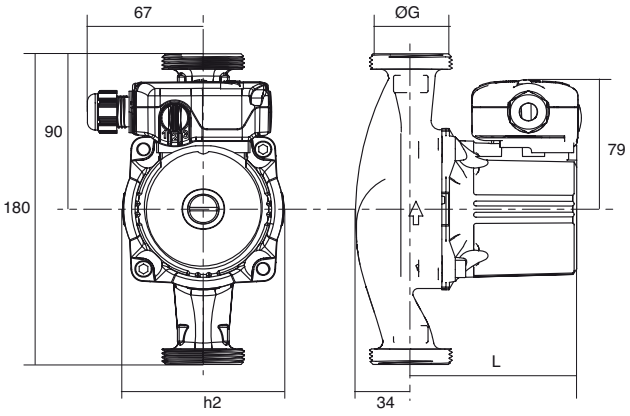

• GEOSUN HYL 43/53/63
130 mm

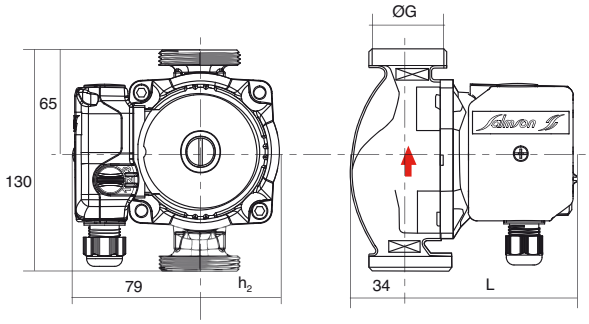

• GEOSUN HXL 83/103
180 mm

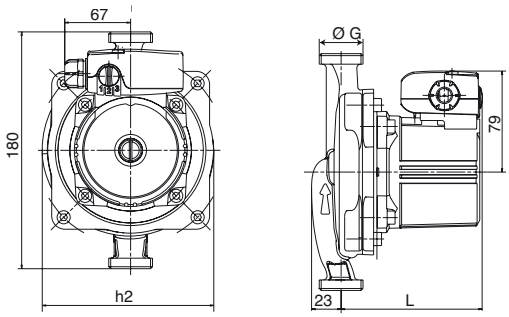

FEATURES

a) Electrical
- Single phase 230 V - 50 Hz
- Motor protection by circuit breaker not essential.

b) Assembly
- Motor axis always horizontal.
- Attached to the installation by pipe connections.

c) Packaging
- Supplied with joints, without unions.

d) Maintenance
- Standard equipment exchange.

ACCESSORIES

- Unions.
- Insulating valves.
- Cleaner threaded plug.



Adaptation rings
ØG1'/2"-2"
Ref. 4051850



Spherical insulation valve
RU 2634 Ref. 4063825

		Ordered reference	Capacitor	Speed selector position	P1	Intensity	L	h2	G	Connection to threaded tube				Mass
					W	A				1/2"	3/4"	1"	1"1/4	kg
GEOSUN	43	HYL 43-15 130	2 µF * 400	1	37	0,17	99	47	1"	RU 1521				2,7
		HXL 43-25 180		2	47	0,21	99	94	1"1/2		RED 2027	RU 2634	RU 3342	
		HYL 43-25 130		3	57	0,25	99	47					+ adaptation ring (4051850)	
	53	HYL 53-15 130	2 µF * 400	1	41	0,2	99	47	1"	RU 1521				2,7
		HXL 53-25 180		2	54	0,28	99	94	1"1/2		RED 2027	RU 2634	RU 3342	
		HYL 53-25 130		3	63	0,36	99	47					+ adaptation ring (4051850)	
	63	HYL 63-15 130	3,5 µF * 400	1	62	0,3	112	47	1"	RU 1521				2,7
		HXL 63-25 180		2	92	0,42	112	94	1"1/2		RED 2027	RU 2634	RU 3342	
		HYL 63-25 130		3	132	0,58	112	47					+ adaptation ring (4051850)	
	73	HXL 73-25 180	3,5 µF * 400	1	81	0,4	122	94	1"1/2		RED 2027	RU 2634	RU 3342	3,5
				2	113	0,6							+ adaptation ring (4051850)	
		HXL 73-32 180		3	151	0,76			2"			RED 2634	RU 3342	
	83	HXL 83-15 180	3 µF * 400	1	50	0,25	108	131	1"	RU 1521				3,7
				2	78	0,35								
				3	110	0,5								
	103	HXL 103-15 180	3 µF * 400	1	75	0,35	118	131	1"	RU 1521				4,2
				2	115	0,55								
				3	165	0,72								

SCX-DCX - SXM-DXM

SINGLE AND TWIN-HEAD CIRCULATORS

Heating and air-conditioning
Light commercial range
50 Hz

- Cannot either be sold or be used in the EEC
- Does not bear the CE marking

OPERATING LIMITS

Flow rates up to :	**14 m³/h**
Heads up to :	**7,5 m**
Max. operating pressure :	**10 bar**
Temperature range :	**–20° à +130°C**
Max. ambient temperature :	**+ 40°C**
DN of ports :	**32 et 40**

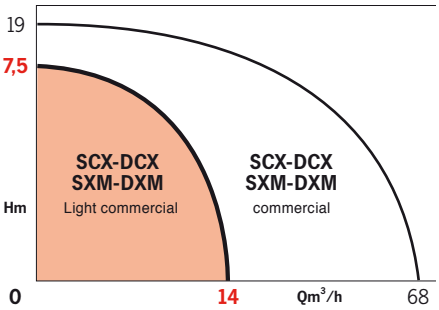

APPLICATIONS

Hot water and chilled water circulation into :
- Heating systems,
- Air-conditioning systems.

For light commercial range, pools, greenhouses, farms...
For new and old (renovation) installations, extensions.

AVANTAGES

CONVENIENCE
- Silent operation.
- Integrated and automatic motor overload protection.
- Speed visualisation on the cover.
- Easy installation (wide and simple access to electrical connections and speed selector).
- No maintenance.
- Automatic venting of rotor chamber.
- Twin head pump: standby pump available at all times or possibility of operating the two pumps in parallel for lower purchase and operating costs.

EASY SELECTION
- Large choice of performances (10 single head models and 8 twin models).
- 3 running speeds for every model.
- Wide applications: air-conditioning and heating.
- Dual voltage motor 230-400 V.

RELIABILITY
- Circulator IPX4D.
- Corrosion resistance reinforced.



•SCX 32-50



• DCX 40-25

• Speed selector 3~230 V (option)

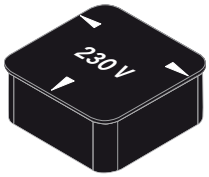

SCX-DCX - SXM-DXM

DESIGN

• Hydraulic part

- In-line pump casing with threaded ports (flanges PN 10 on DXM 40-25 and 40-45, DCX 40-25 and 40-45, SXM and SCX 40-30N).
- Twin heads models (DXM/DCX) : twin pumps in a single casing, hydraulic separation by double flap valve on discharge end.
- Flanges models: bosses on rear for wall mounting, flanges fitted with pressure gauge ports.
- Motor : 2 pole, wet rotor, self lubrificated bearings.
- Single-phase: 3 speeds per manual selector, integrated capacitor.
- Three-phase: dual voltage, 3 speeds by plug-in selector switch coupled to voltage (supplied in 400V, three-phase 230V plug as an option).

Speed :	see table
Winding	1-phase : 230 V
	3-phase : 230-400 V
Frequency :	50 Hz
	60 Hz optional
Protection index :	IPX4D
Insulating category :	155 (F)
CEM conformity:	Immunity : EN 61000-6-2
	Emission : EN 61000-6-3

STANDARD CONSTRUCTION

Main parts	Material
Pump casing	Cast iron
Impeller	Composite material
Shaft	Stainless steel
Sleeve bearings	Graphite
Casing gaskets	Ethyl.-Propylène

IDENTIFICATION

SCX 32-35

SCX : single pump, 3-phase
DCX : twin pump, 3-phase
SXM : single pump, 1-phase
DXM : twin pump, 1-phase

DN of ports (mm)

Pressure head (dm) at rated capacity

THE 2 POLE CIRCULATORS LINES

• SXM - DXM

Single & twin-head circulators

- Threaded ports G2 or flanges DN 40
- Single-phase 230 V, winding motors with built-in capacitor.
- Voltage complying with standard.
- Built-in and automatic thermal overload protection.
- 3 speeds motor selected per manual selector.
- 5 single head models.
- 4 twin head models.

• SCX - DCX

Single & twin-head circulators

- Threaded ports G2 or flanges DN 40.
- Dual voltage motor 230-400V.
- Voltage complying with standard.
- Built-in and automatic thermal overload protection.
- 3 speeds motor selected per manual selector.
- 5 single head models.
- 4 twin head models.



• DCX 40-25



•SCX 32-50

MINIMUM SUCTION PRESSURE (M.W.C.)

ACCORDING TO OPERATING TEMPERATURE

models	50°C	95°C	110°C	130°C
SCX	0,5m	5 m	11 m	24 m
SXM	0,5m	5 m	11 m	24 m
DCX	0,5m	5 m	11 m	24 m
DXM	0,5m	5 m	11 m	24 m

NB : at high altitudes, add 0.60 m for every 500 m (10.2 m.w.c. = 1 bar).

GENERAL SELECTION GRAPHS AT MAXIMUM SPEED - 50 HZ

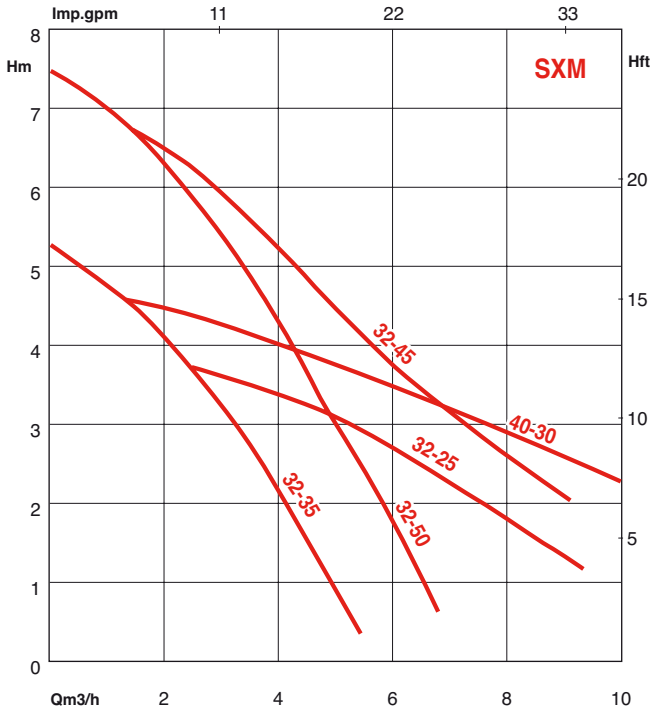

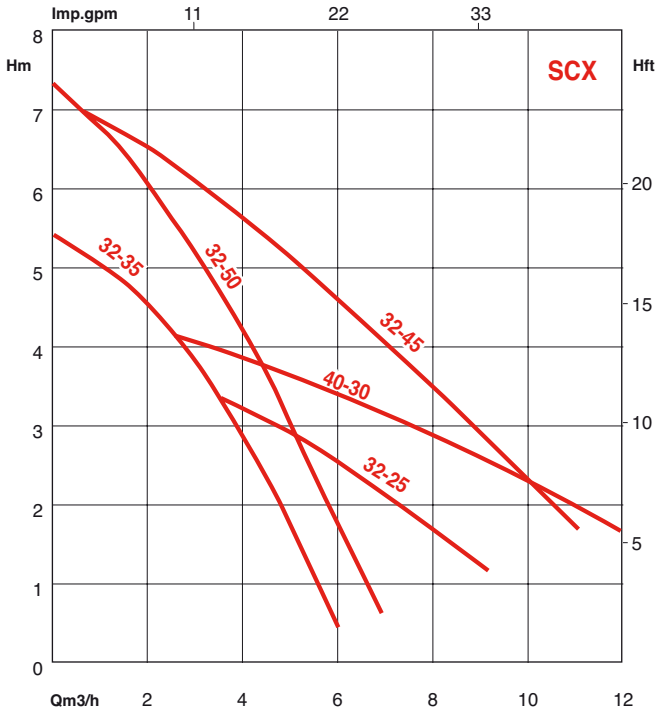

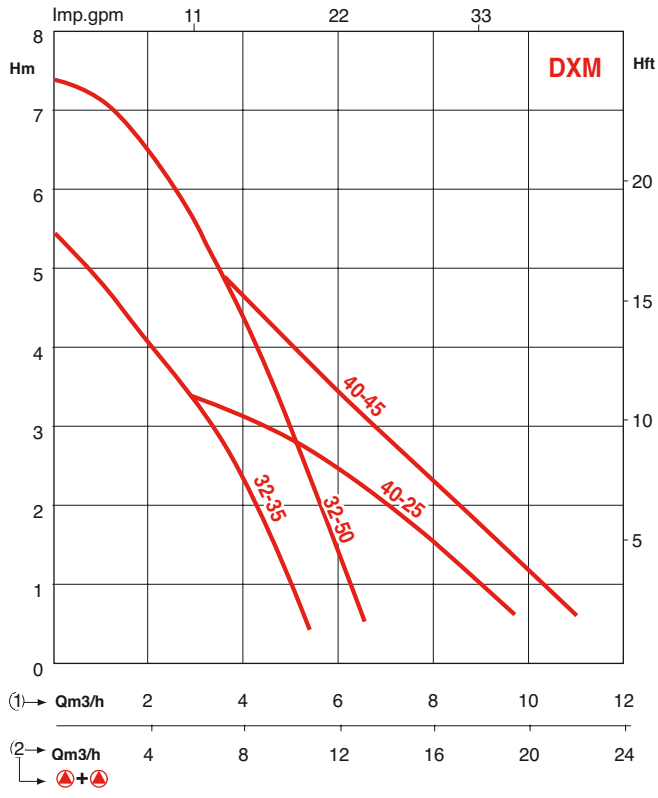

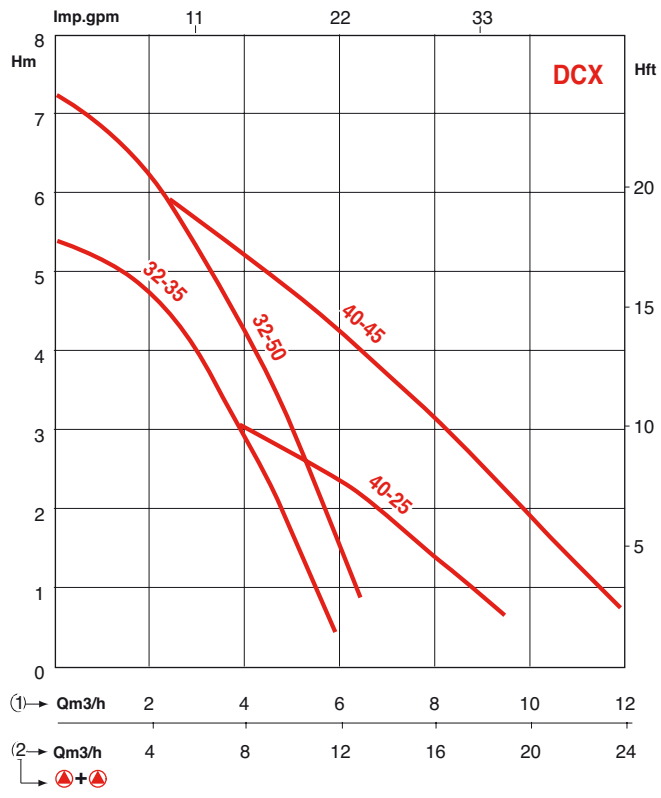

SCX-DCX - SXM-DXM

SCX-SXM

Fitting positions

heating

❄ for chilled water

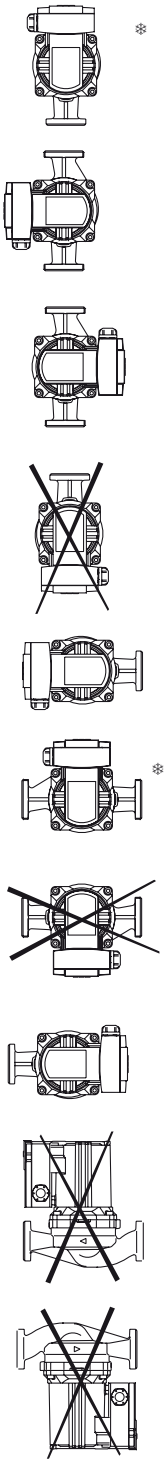

SINGLE-PHASE MODELS

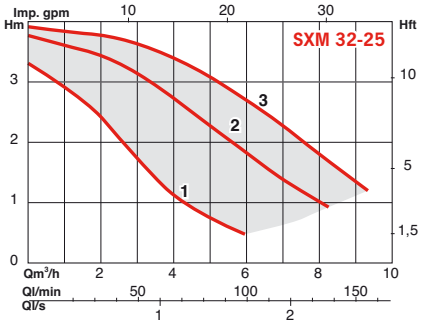

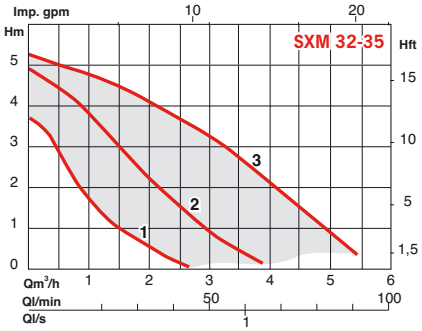

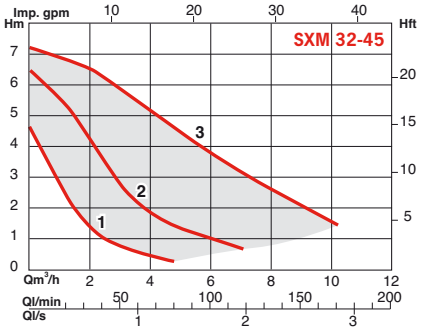

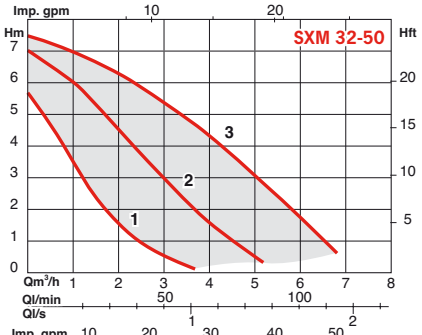

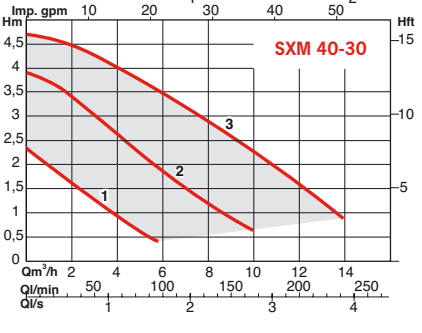

THREE-PHASE MODELS

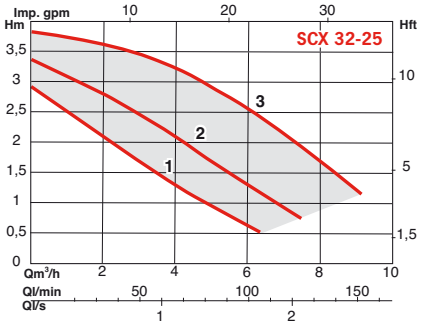

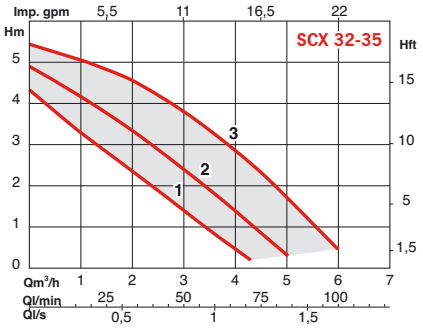

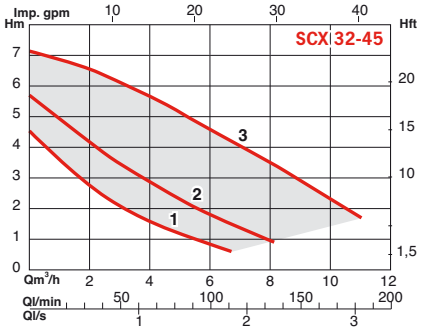

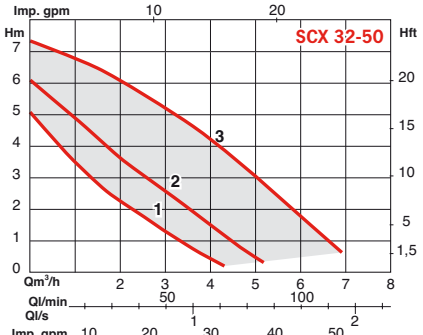

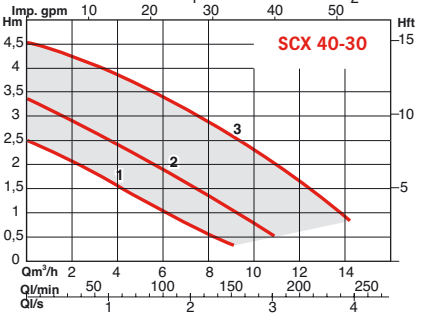

DCX - DXM

Fitting positions

heating

❄ for chilled water

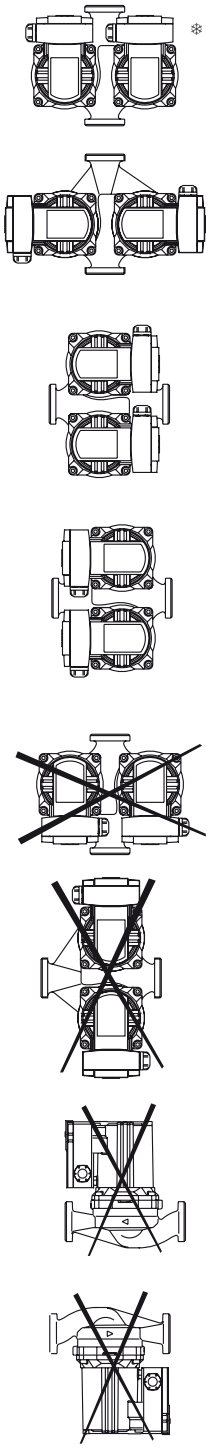

SINGLE-PHASE MODELS

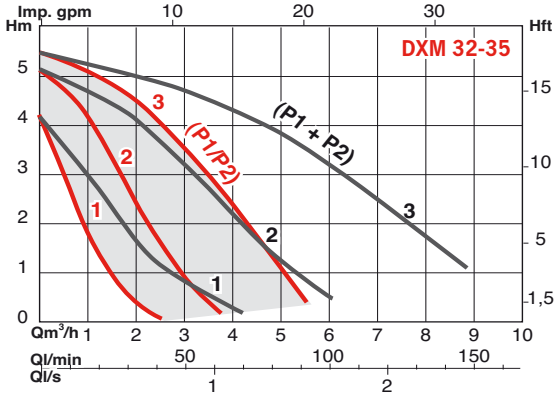

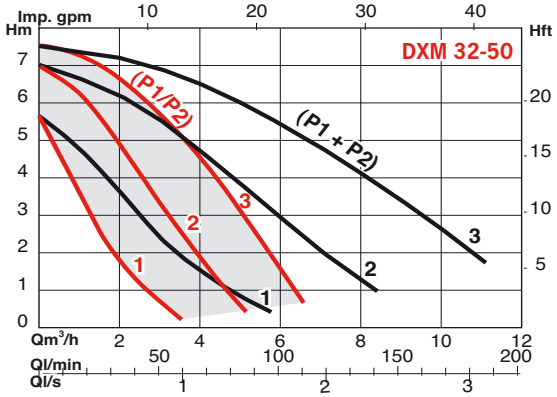

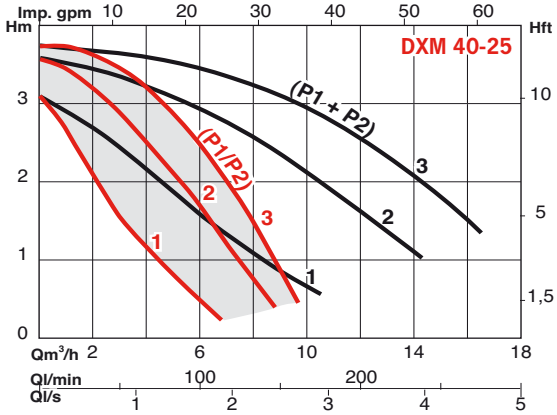

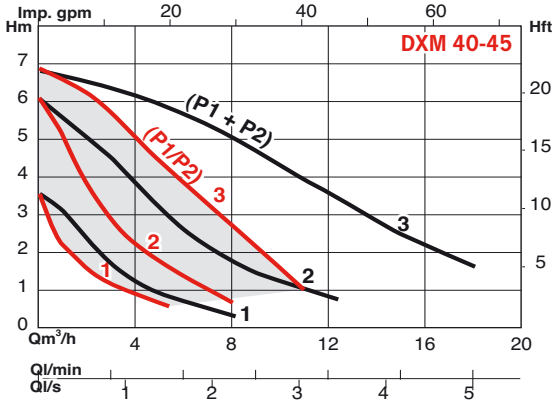

THREE-PHASE MODELS

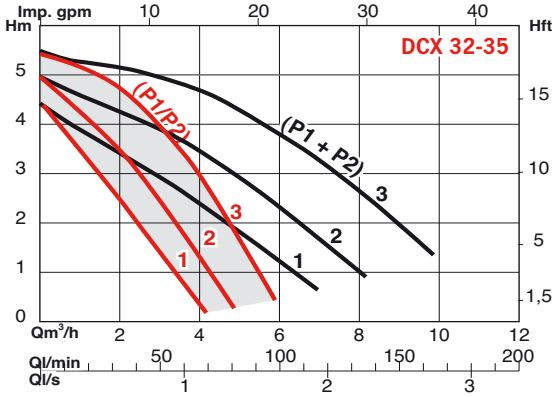

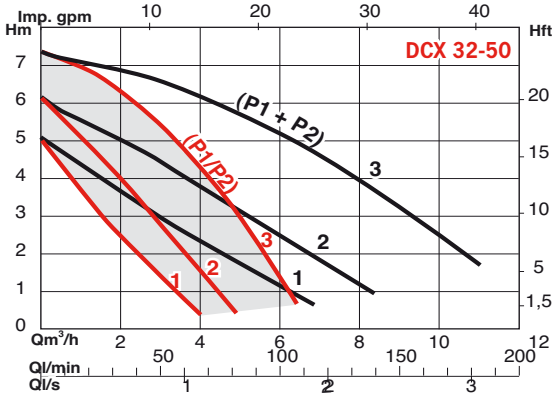

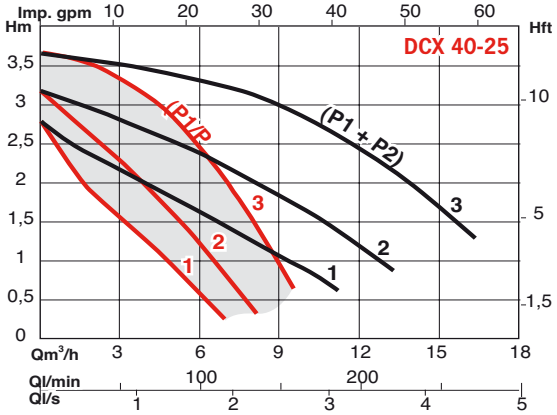

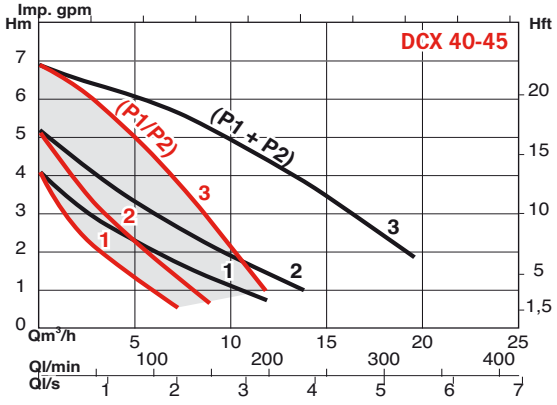

SCX-DCX - SXM-DXM

OPERATING TWIN PUMP IN P1 OR P2 AND P1 + P2

Alternating operation: P1 or P2

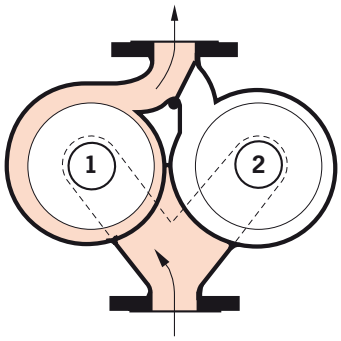

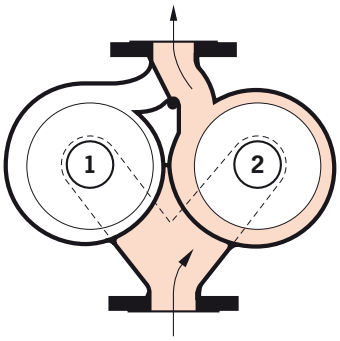

Parallel operation: P1 + P2

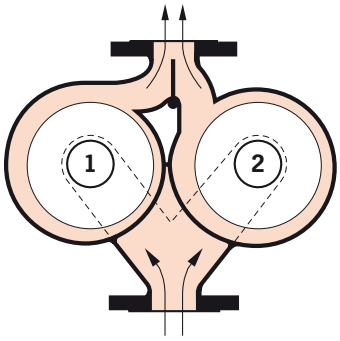

SALMSON INTERCHANGEABILITY

New generation	CXL generation
SINGLE CIRCULATORS	
SXM 32-35	CXL 50-32
SXM-32-25	CXL 70-32
SXM 32-50	CXL 80-32
SXM 32-45	CXL 100-32
SCX 32-35 + speed selector 3~230V	CXL 50-32-T2
SCX 32-35	CXL 50-32-T4
SCX 32-25 + speed selector 3~230V	CXL 70-32-T2
SCX 32-25	CXL 70-32-T4
SCX 32-50 + speed selector 3~230V	CXL 80-32-T2
SCX 32-50	CXL 80-32-T4
SCX 32-45	CXL 100-32-T4
TWIN CIRCULATORS	
DXM 32-35	CXL 2020
DXM 32-35	CXL 2050
DXM 40-25	CXL 2070N
DXM 32-50	CXL 2080
DXM 40-45	CXL 2100N
DCX 32-35 + 2 speed selectors 3~230V	CXL 2050-T2
DCX 32-35	CXL 2050-T4
DCX 40-25 + 2 speed selectors 3~230V	CXL 2070N-T2
DCX 40-25	CXL 2070N-T4
DCX 32-50 + 2 speed selectors 3~230V	CXL 2080-T2
DCX 32-50	CXL 2080-T4
DCX 40-45	CXL 2100N-T4

SPEED SELECTOR

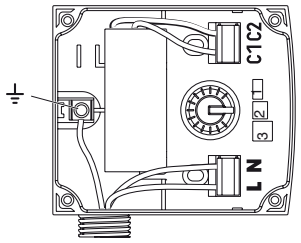

1~230 V (SXM/DXM)

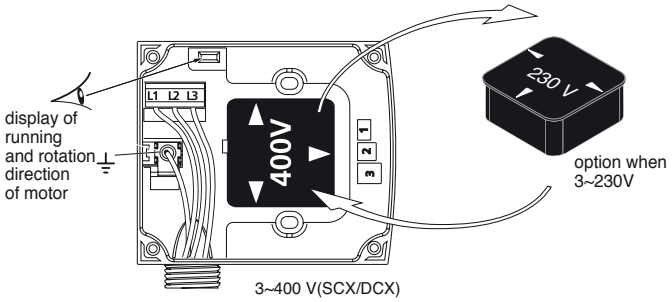

3~400 V(SCX/DCX)

DIMENSIONS

Circulators with unions

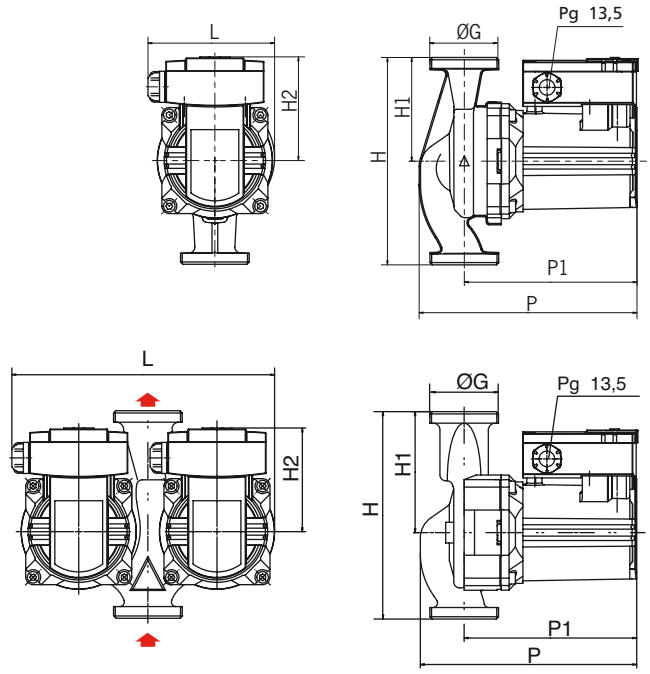

TYPE		H	H1	H2	P	P1	L	Mass	Ø	Connection accessory for threaded pipe	
		mm	mm	mm	mm	mm	mm	kg	orifices	Ø1¹/⁴"	Ø1"
SCX	32-25	180	90	90	204	158	116	4,4	G2"	RU 3342	RED 2634
SXM								4,2			
SCX	32-35	180	90	90	189	150	110	3,8	G2"	RU 3342	RED 2634
SXM								4			
SCX	32-45	180	90	90	204	158	116	4,4	G2"	RU 3342	RED 2634
SXM								4,2			
SCX	32-50	180	90	90	189	150	110	4	G2"	RU 3342	RED 2634
SXM								3,8			
SCX	40-30N	220	110	92	232	178	144	9,4	DN 40	with flanges - CB4049	
SXM								9,4			
DCX	32-35	180	105	90	188	150	228	8,2	G2"	RU 3342	RED 2634
DXM								7,8			
DCX	32-50	180	105	90	188	150	228	8,2	G2"	RU 3342	RED 2634
DXM								7,8			
DCX	40-25	250	135	90	233	158	259	15	DN 40	with flanges - CB4049	
DXM								14,6			
DCX	40-45	250	135	90	233	158	259	15	DN 40	with flanges - CB4049	
DXM								14,6			

Double circulators with flanges

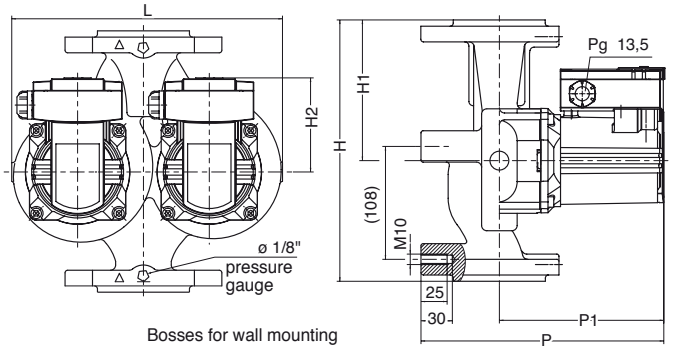

Bosses for wall mounting

SCX-SXM 40-30N

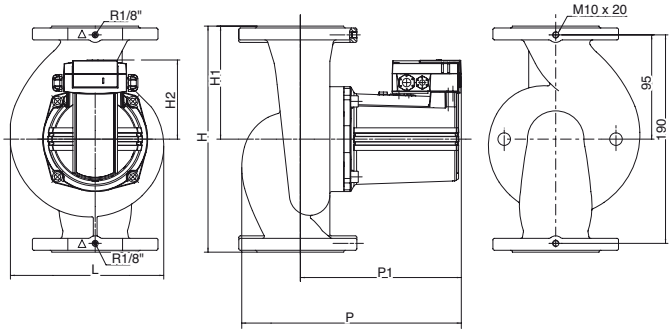

Flanges

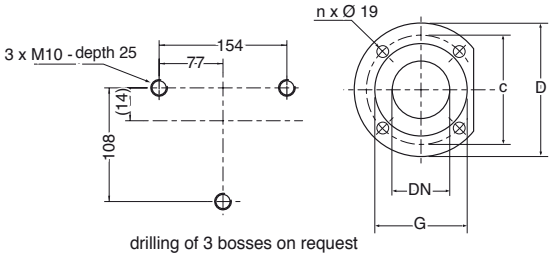

drilling of 3 bosses on request

• **PN 10 - EN 1092 - 2 - Suction-Discharge**

DN	D	C	G	n x ø
	mm	mm	mm	mm
40	150	110	84	4 x 19

SCX-DCX - SXM-DXM

ELECTRICAL DATA

ORDER REFERENCE	P2	capacitor	position speed selector	Speed	P1	current(A)		
	W	µF x V		rpm	W max.	1~ 230V	3~230V	3~400V
SXM 32-25	70	5	1	1710	110	0,55	-	-
			2	2340	150	0,75	-	-
			3	2660	180	0,85	-	-
SXM 32-35	50	3,7	1	1200	75	0,35	-	-
			2	1640	110	0,55	-	-
			3	2320	140	0,65	-	-
SXM 32-45	100	5	1	1100	130	0,65	-	-
			2	1480	200	1,00	-	-
			3	2160	245	1,20	-	-
SXM 32-50	80	5	1	1350	115	0,60	-	-
			2	1950	165	0,80	-	-
			3	2420	205	1,00	-	-
SXM 40-30N	90	5	1	1600	120	0,62	-	-
			2	2100	175	0,87	-	-
			3	2500	195	0,95	-	-
SCX 32-25	70		1	1810	75	-	0,25	0,15
			2	2120	105	-	0,35	0,20
			3	2610	160	-	0,65	0,40
SCX 32-35	50		1	1890	75	-	0,25	0,15
			2	2190	100	-	0,35	0,20
			3	2650	150	-	0,65	0,40
SCX 32-45	100		1	1410	105	-	0,35	0,20
			2	1700	160	-	0,50	0,30
			3	2320	255	-	0,90	0,50
SCX 32-50	80		1	1510	85	-	0,30	0,15
			2	1830	125	-	0,40	0,25
			3	2420	200	-	0,75	0,45
SCX 40-30N	90		1	1700	90	-	0,30	0,17
			2	2050	130	-	0,43	0,25
			3	2550	195	-	0,78	0,45
DXM 32-35	50	3,7	1	1200	75	0,35	-	-
			2	1640	110	0,55	-	-
			3	2320	140	0,65	-	-
DXM 32-50	80	5	1	1350	115	0,60	-	-
			2	1950	165	0,80	-	-
			3	2420	205	1,00	-	-
DXM 40-25	70	5	1	1710	110	0,55	-	-
			2	2340	150	0,75	-	-
			3	2660	180	0,85	-	-
DXM 40-45	100	5	1	1100	130	0,65	-	-
			2	1480	200	1,00	-	-
			3	2160	245	1,20	-	-
DCX 32-35	50		1	1890	75	-	0,25	0,15
			2	2190	100	-	0,35	0,20
			3	2650	150	-	0,65	0,40
DCX 32-50	80		1	1510	85	-	0,30	0,15
			2	1830	125	-	0,40	0,25
			3	2420	200	-	0,75	0,45
DCX 40-25	70		1	1810	75	-	0,25	0,15
			2	2120	105	-	0,35	0,20
			3	2610	160	-	0,65	0,40
DCX 40-45	100		1	1410	105	-	0,35	0,20
			2	1700	160	-	0,50	0,30
			3	2320	255	-	0,90	0,50

FEATURES

a) Electrical

- Single-phase 230 V - 50 Hz with built-in capacitor.
- Three-phase 400 V or 230* V (50 Hz)

* For 3~230V, order “speed selector”: ref. 2040641 - sold separately.

- 1 Selector for SCX
- 2 Selectors for DCX

b) Installation

- Motor shaft always horizontal.

Connection to the installation :

- Per unions and per weld-on or screw-on PN 10 counter-flange for DXM40-25, DXM 40-45, DCX40-25 and DCX 40-45, SXM 40-30N and SCX 40-30N.

c) Packaging

- Union models: supplied with gaskets without unions.
- Flanges models: supplied with gaskets and bolts.

d) Maintenance

- Standard exchange of the circulator.

OPTIONS & ACCESSORIES

- Unions - RU 3342 or - RED 2634 CB weld-on or screw on counter-flanges.
- MGP control and protection devices (twin circulators).

BLANK COVER*

With seals for twin models.

Type	Order reference	Item n°
DCX-DXM 32-35/32-50	COUV.22	2044105
DCX-DXM 40-25/40-45	COUV.22	2044105

* Blanks the opening left after the removal of the hydraulic assembly and motor. Allows standby pump operation during the troubleshooting process.

OPERATING LIMITS

Flow rates up to:	**68 m3/h***
Heads up to:	**19 m**
Max. service pressure:	**10 bar**
Temperature range:	**-20° à + 130°C****
Max. ambient temperature:	**+ 50°C*****
DN of ports:	**32 à 100**

*136 m3/h : with both heads operating in parallel
** except models 80-110N & 80-150N = 110°C
*** 40°C if fluid temperature >120°C

SCX-DCX - SXM-DXM

SINGLE AND TWIN-HEAD CIRCULATORS

Commercial heating & air conditioning

2 pole - 50 Hz

- Cannot either be sold or be used in the EEC
- Does not bear the CE marking

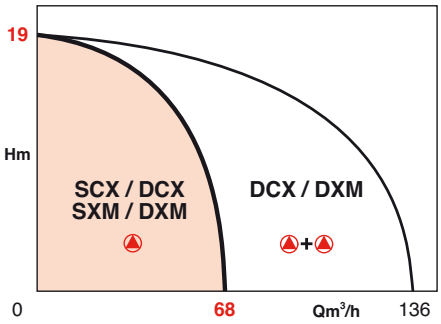

APPLICATIONS

- Commercial central heating in housing, office buildings, greenhouses, swimming pools, farms, etc.
- Air conditioning.
- Boiler recycling.
- Primary loop, exchanger or heater, in secondary hot water system.

All new or renovated installations.

ADVANTAGES

- **Versatile circulators designed for use in heating, air conditioning, and secondary hot water circuits.**
- **Cataphoresis coating of pumphousing for a better resistance to corrosion.**
- **Dual-voltage motors, 230-400 V. Except models 80-110N and 80-150N = 400V.**
- **Built-in thermal overload protection of motor.**
- **Redesigned casing for better performance and even quieter operation.**
- **New impeller profile for optimum efficiency.**
- **Lower energy consumption.**
- **Automatic venting of rotor chamber.**

DCX-DXM
- **Standby pump available at all times.**
- **Possibility of operating the two pumps in parallel, for lower purchase and operating costs.**



- DCX (three-phase)



- SCX (three-phase)



- DXM (Single-phase)



- SXM (Single-phase)

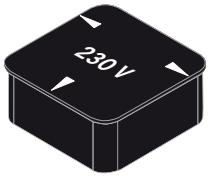

- Speed selector 3~230 V (accessories)

SCX-DCX - SXM-DXM

DESIGN

• Pump

- Flanged casing*, in-line ports.
- Bosses on rear for wall mounting**.
- Flanges fitted with pressure gauge ports.
- New impeller profile.

* threaded ports on model SCX and SXM 32-80N.
** drilling on request

Twin-head models (DCX-DXM)

- Twin pumps in a single casing.
- Hydraulic separation by double flap valve on discharge end.

• Motors

- 2 pole, voltages according to European standards.
- Wet rotor, self-lubricating soft bearings.

Single-phase :

- 2 speeds by plug-in selector switch, built-in capacitor.

Three-phase:

- dual voltage*, 3 speeds by plug-in selector switch coupled to voltage

Speeds : see table
Windings 1-phase : 230 V
3-phase : 230-400 V*
Frequency : 50 Hz (60 Hz on request)
Protection index : IPX4D
Insulating category : H
EMC conformity : - emission : EN 61000-6-3
- immunity : EN 61000-6-2

*(except SCX 80-110N & 80-150N, DCX 80-110N & 80-150N)

THE 2 POLE CIRCULATOR LINES

• SCX - DCX

Single and twin-head circulators
• Threaded G2 and ND 40 to 100.
• Three-phase, dual voltage 230-400V* motors.
• Voltages according to European standards.
• Three-speed motors by plug-in manual selector switch.
• Built-in thermal overload protection.
• 17 single head models.
• 16 twin-head models.



* Except models 80-110N & 80-150N = 3~ 400V



• SXM - DXM



Single and twin-head circulators
• Threaded G2 and ND 40 to 80.
• Single-phase 230 V, winding motors with built-in capacitor.
• Voltages according to European standards.
• Two-speed motors by plug-in manual selector switch.
• Built-in thermal overload protection.
• 10 single head models.
• 10 twin-head models.



STANDARD CONSTRUCTION

Main parts	Material
Pump casing	Cast iron EN-GJL-250
Impeller	Composite PP-50%GF
Shaft	SS X46Cr13
Rotor can	SS
Soft bearings	Graphite
Casing gasket	Ethylene-Propylene

IDENTIFICATION

SCX 65-25

SCX: single pump, 3-phase
DCX: twin pump, 3-phase
SXM: single pump, 1-phase
DXM: twin pump, 1-phase

DN of ports (mm)

Total manometric head (dm) at nominal flow

MIN. SUCTION PRESSURE (m w.c.) ACCORDING TO OPERATING TEMPERATURE

MODELS	3-phase		1-phase		50°C	95°C	110°C	130°
	SCX	DCX	SXM	DXM				
32-80	•	•	•	•	0,5mCE	5mCE	11mCE	24mCE
40-40	•	•	•	•	0,5mCE	5mCE	11mCE	24mCE
40-80	•	•	•	•	0,5mCE	5mCE	11mCE	24mCE
40-110	•	•	•	•	0,5mCE	5mCE	11mCE	24mCE
50-25	•	•	•	•	3mCE	10mCE	16mCE	29mCE
50-50	•	•	•	•	3mCE	10mCE	16mCE	29mCE
50-90	•	•	•	•	3mCE	10mCE	16mCE	29mCE
50-110	•	•	–	–	3mCE	10mCE	16mCE	29mCE
65-25	•	•	•	•	3mCE	10mCE	16mCE	29mCE
65-50	•	•	•	•	3mCE	10mCE	16mCE	29mCE
65-90	•	•	–	–	3mCE	10mCE	16mCE	29mCE
65-110	•	•	–	–	3mCE	10mCE	16mCE	29mCE
80-25	•	•	•	•	3mCE	10mCE	16mCE	29mCE
80-50	•	•	–	–	3mCE	10mCE	16mCE	29mCE
80-110	•	•	–	–	9mCE	18mCE	23mCE	–
80-150	•	•	–	–	9mCE	18mCE	23mCE	–
100-50	•	–	–	–	3mCE	10mCE	16mCE	29mCE

NB: At high altitudes, add 0.60 m for every 500 m. (10.2 m w.c. = 1 bar)

COMPETITIVE CHANGES

• Three-phase motor terminal box





• Electrical connections easy to make, on very accessible terminal blocks.

• Speed selected by plug-in manual selector switch coupled to the operating voltage.

• connection to 3~ 230 V*
a) Remove the speed selector 3~400V
b) Plug in the speed selector 3~230 V (accessory)

The speed and operating voltage displayed on the top of the terminal box.

* Except models 80-110N & 80-150N



• Rotor-shaft



• The hollow shaft ensures a circulation of water that allows automatic venting and lubrication.
• Permanent venting of the rotor chamber, eliminating manual air bleed when starting.
• Continuous lubrication of the rear soft bearing.
• No more blockage of shaft.

• Impeller

• New profile for high efficiency, lower energy consumption and noise reduction.

• Single-phase, 2 pole motor

• 230 V winding.
• Built-in capacitor.
• Two-speed plug-in manual selector switch.
• Connections to terminal blocks easy to reach, cables enter on right or left side.
• Built-in thermal overload probe protects winding at all speeds by external relay.



• Three-phase, 2 pole motor

• Dual-voltage, 3-phase 230-400V*
• With plug-in speed selector coupled to operating voltage (see opposite).
• Built-in thermal overload probe protects winding at all speeds by external relay.
• New, more attractive terminal box.
• Electrical connections via terminal box, cable glands on right or left side.
• Display of rotation direction of motor, speed selected, and operating voltage.
• New data plate with information about all electrical values of the installed circulator.
• Very quiet motors.

* except models 80-110N & 80-150N = 3~ 400V

SCX-DCX - SXM-DXM

GENERAL SELECTION GRAPHS AT MAXIMUM SPEED

SCX`
2 POLE
3-PHASE
50 Hz



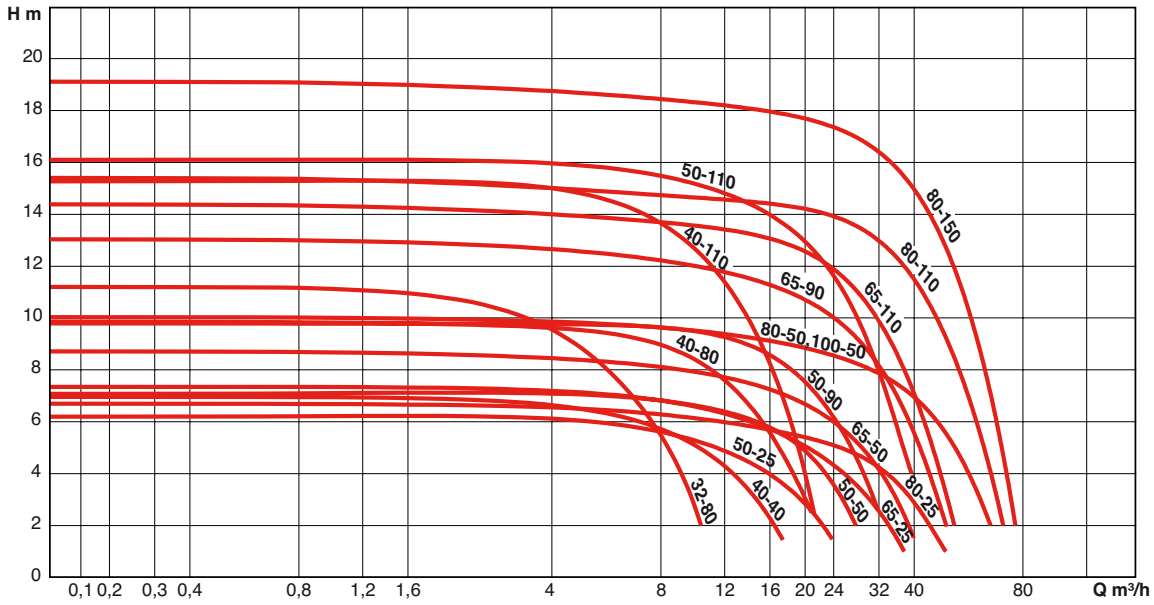

SXM
2 POLE
1-PHASE
50 Hz



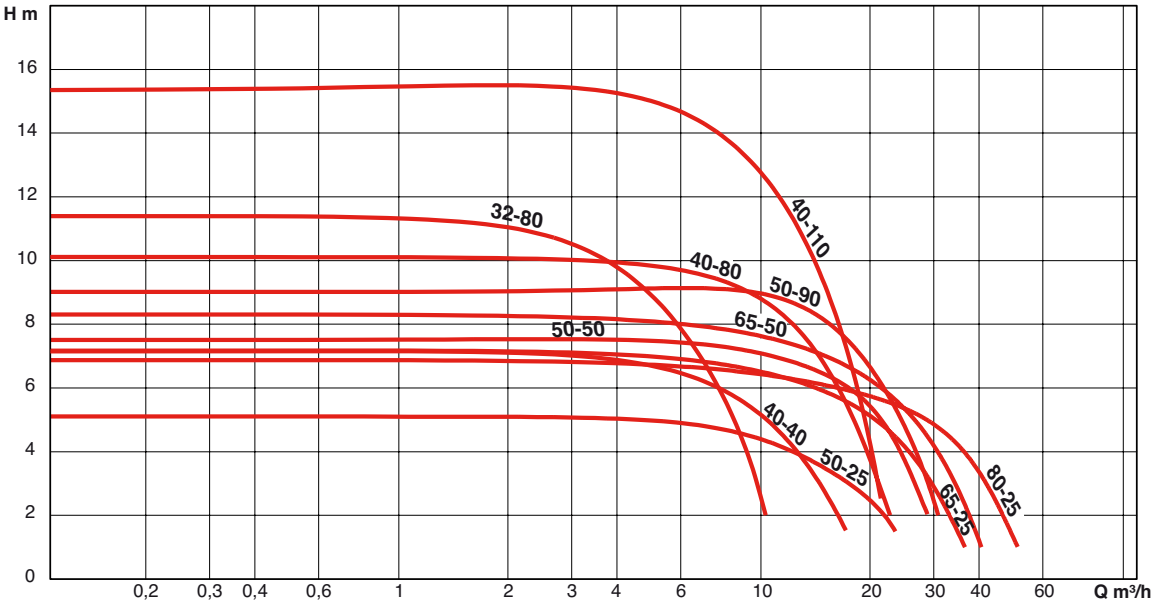

MOUNTING POSITION

(B) : do not use with chilled water

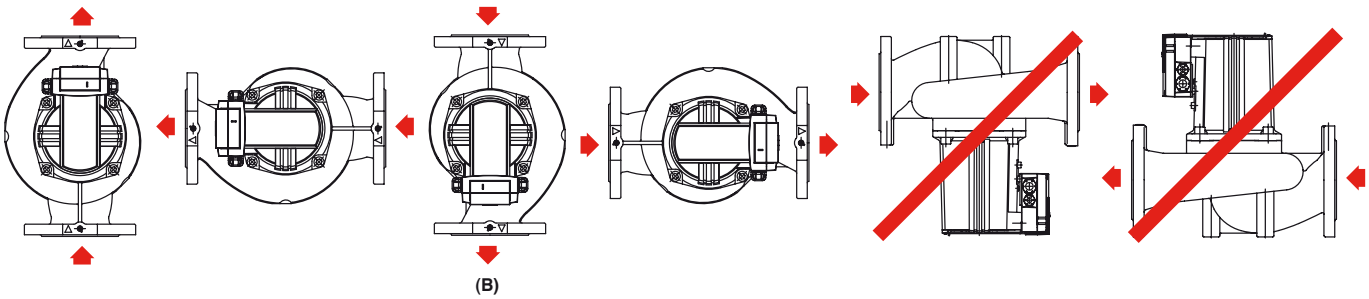

GENERAL SELECTION GRAPHS AT MAXIMUM SPEED

DCX
2 POLE
3-PHASE
50 Hz



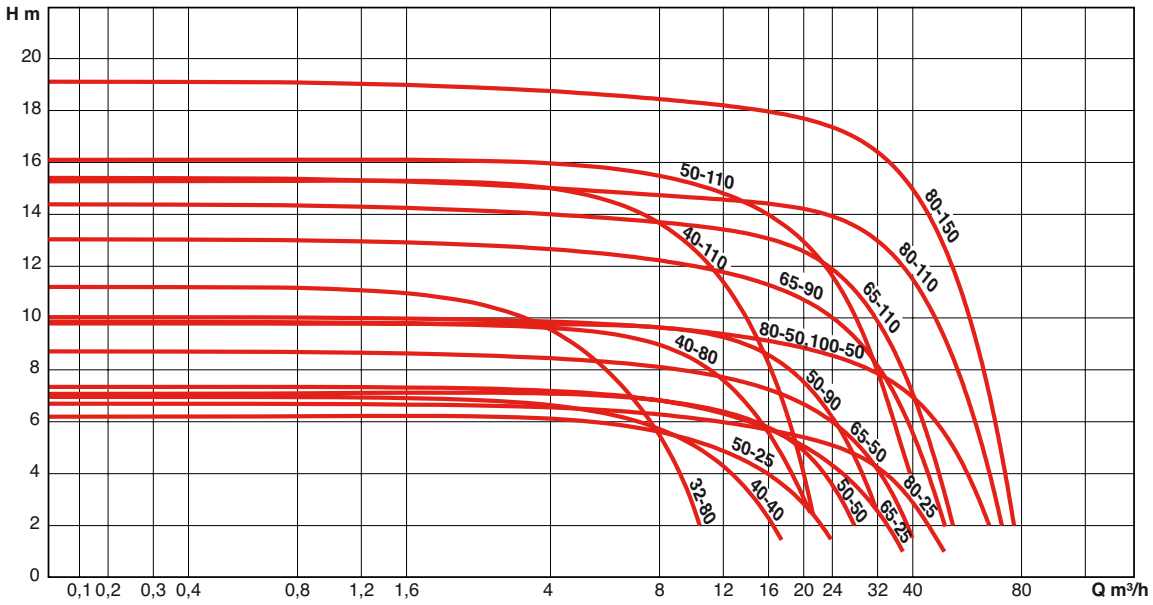

DXM
2 POLE
1-PHASE
50 Hz



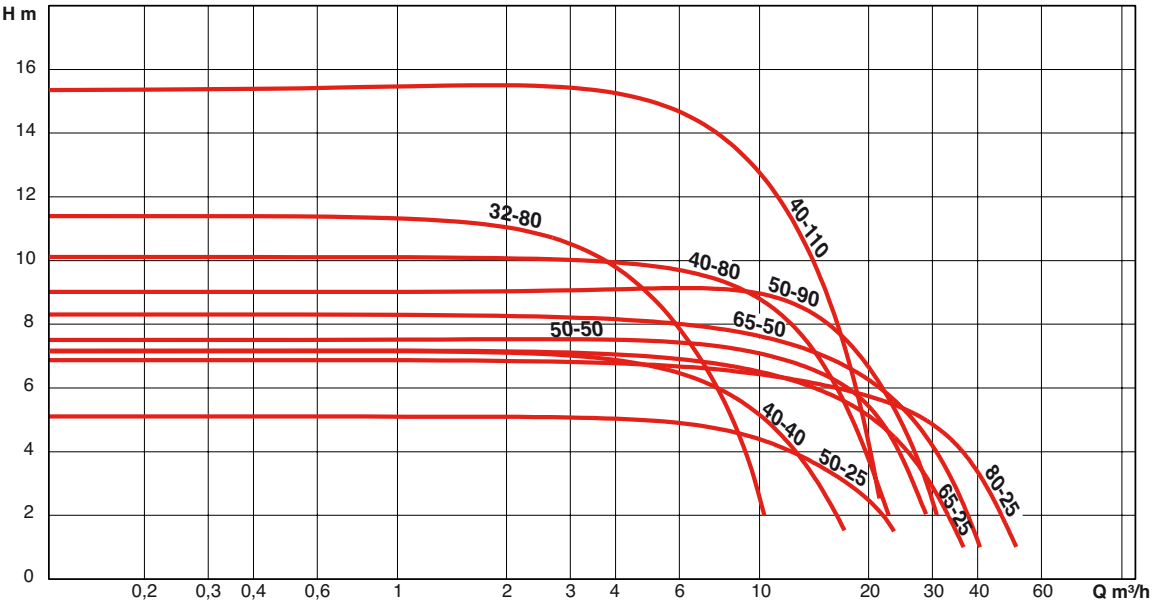

MOUNTING POSITION

(A): possible mounting, but needs periodical changeover to avoid trapped air at the high point, or connection of a bleed to the port provided for it (Ø 1/8").

(B): Do not use with chilled water.

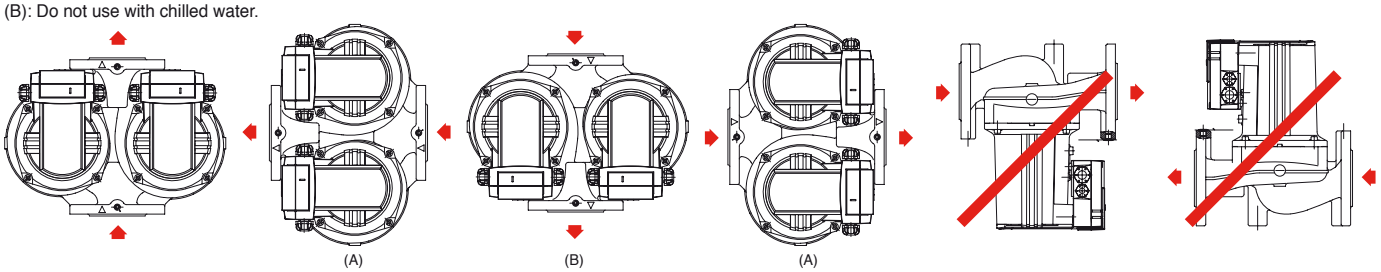

SCX-DCX - SXM-DXM

SCX - SINGLE CIRCULATORS - 2 POLE - THREE-PHASE 50 HZ

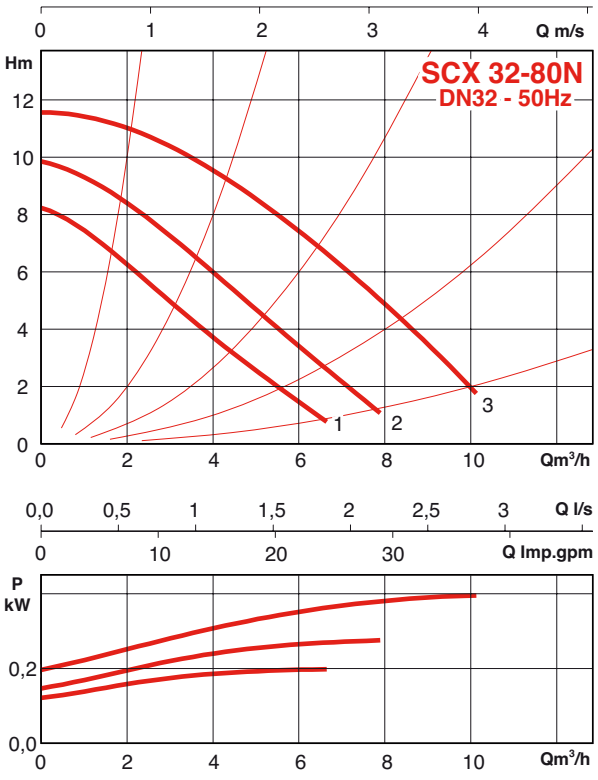

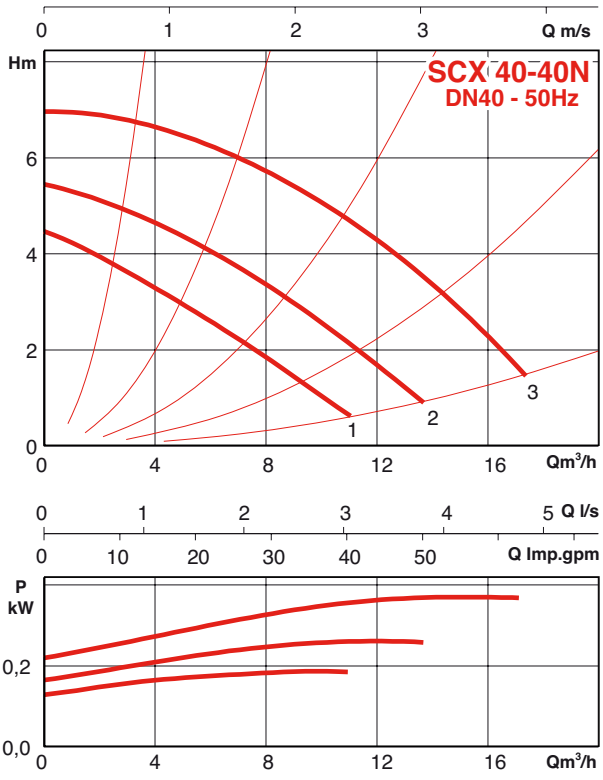

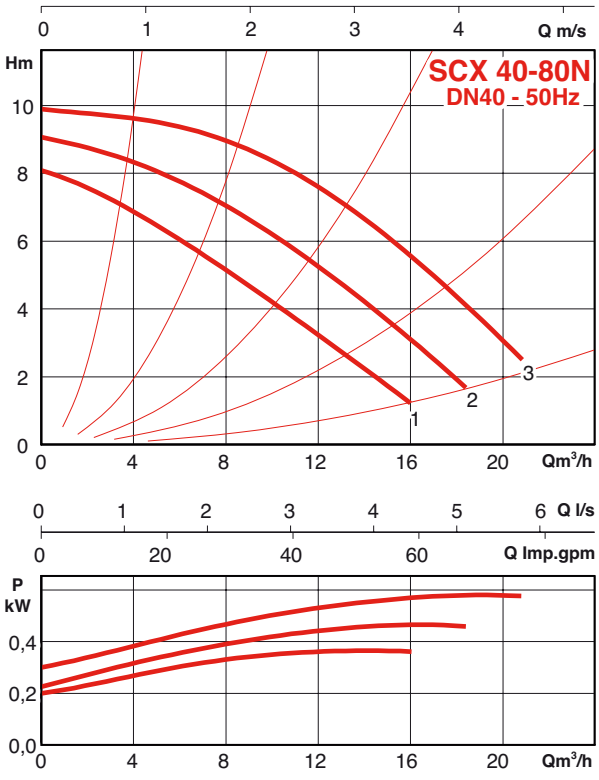

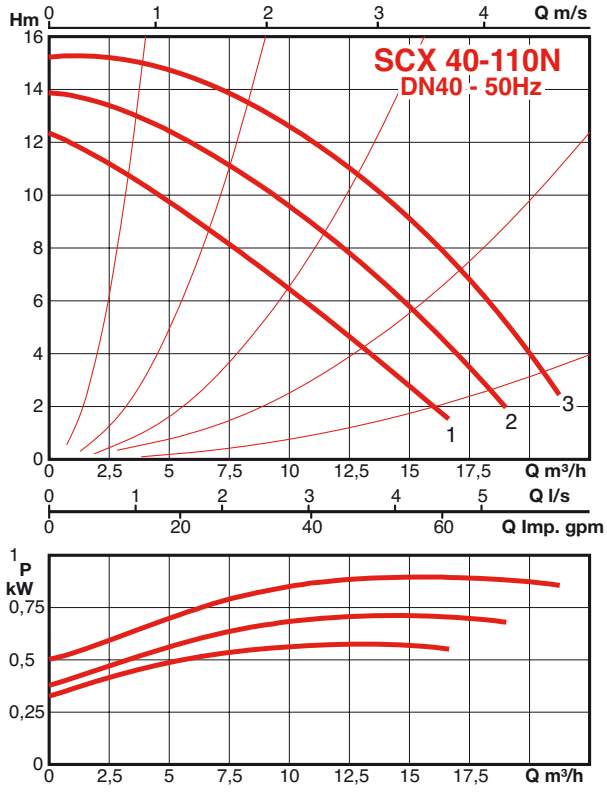

SCX - SINGLE CIRCULATORS - 2 POLE - THREE-PHASE 50 HZ

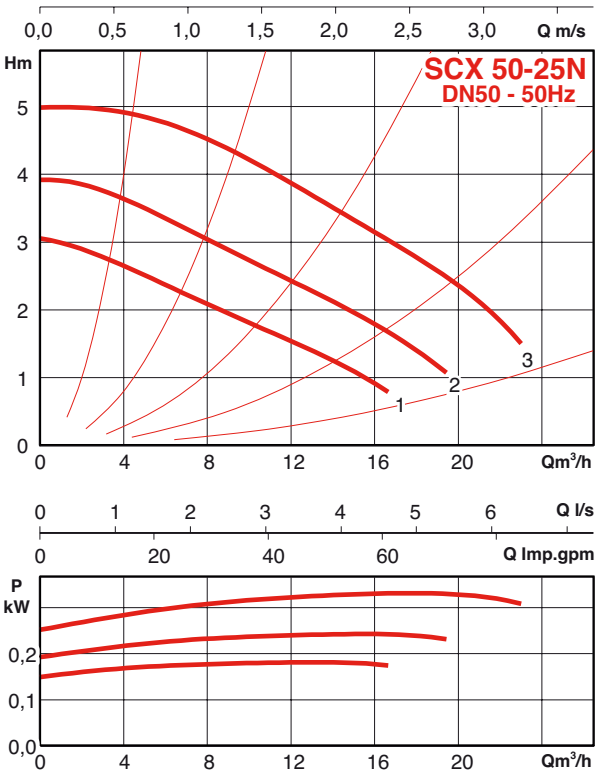

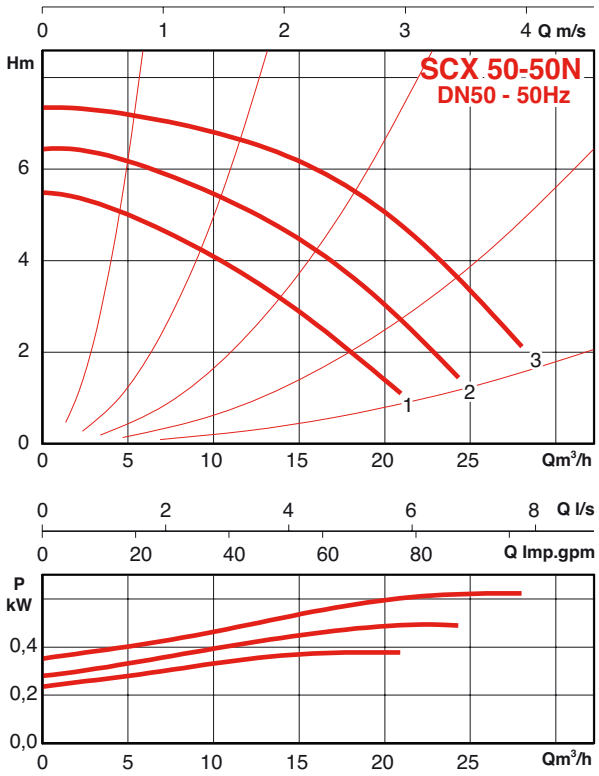

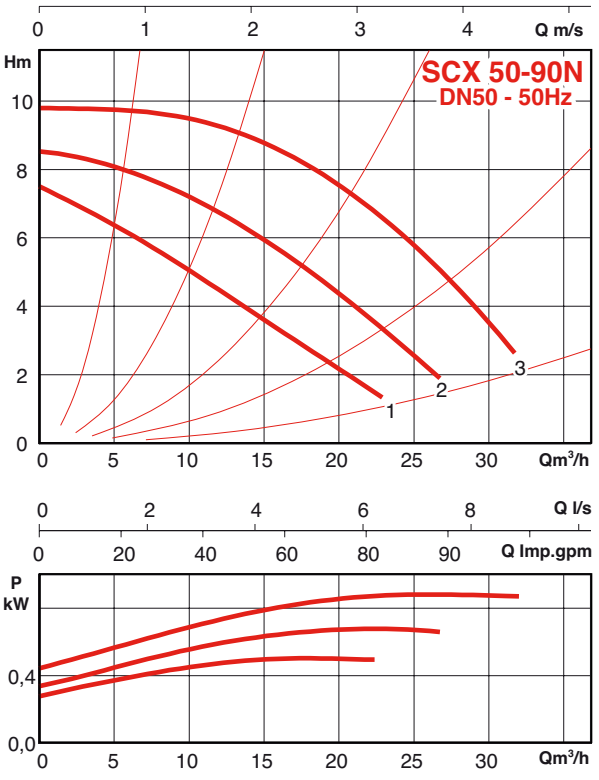

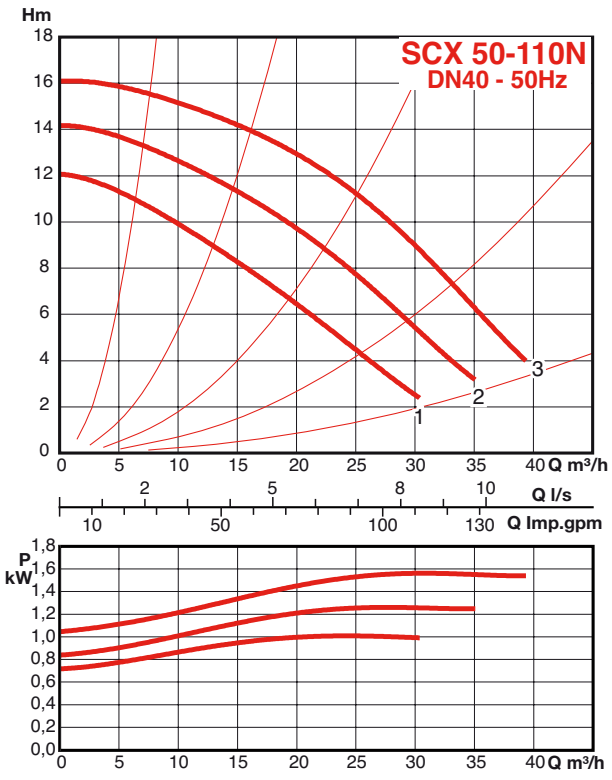

SCX-DCX - SXM-DXM

SCX - SINGLE CIRCULATORS - 2 POLE - THREE-PHASE 50 HZ

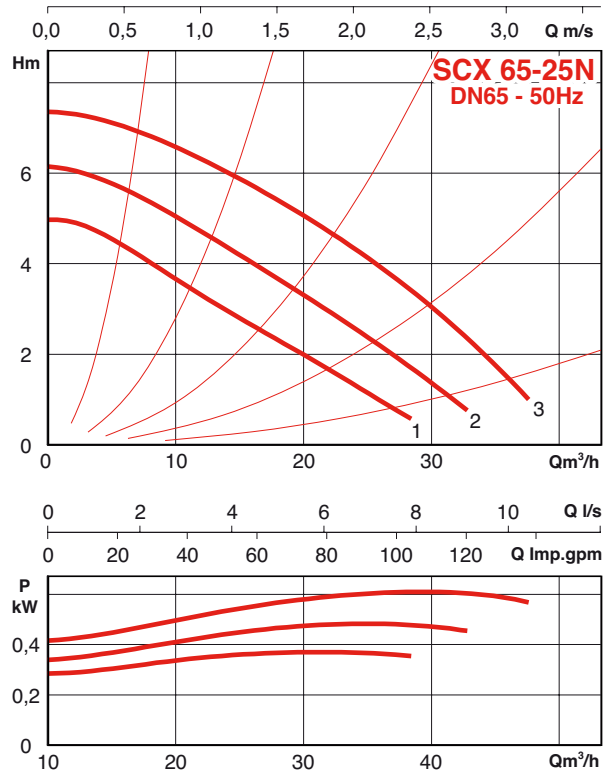

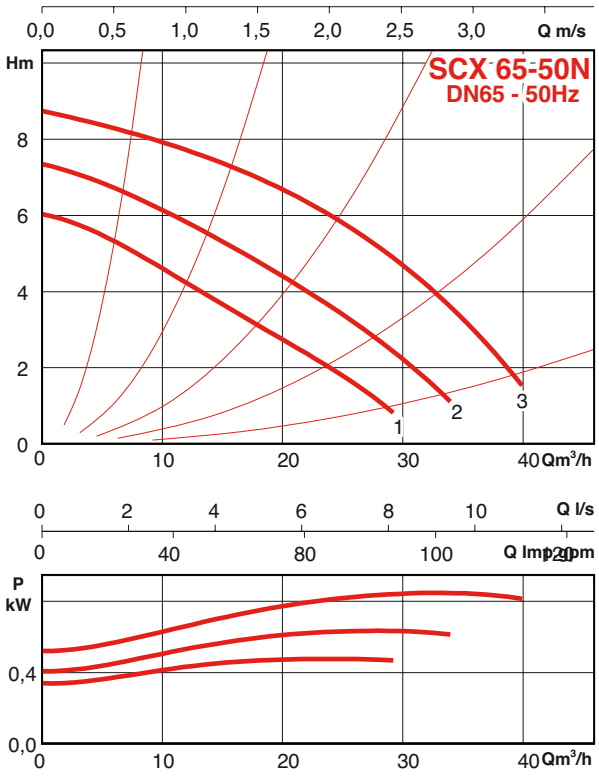

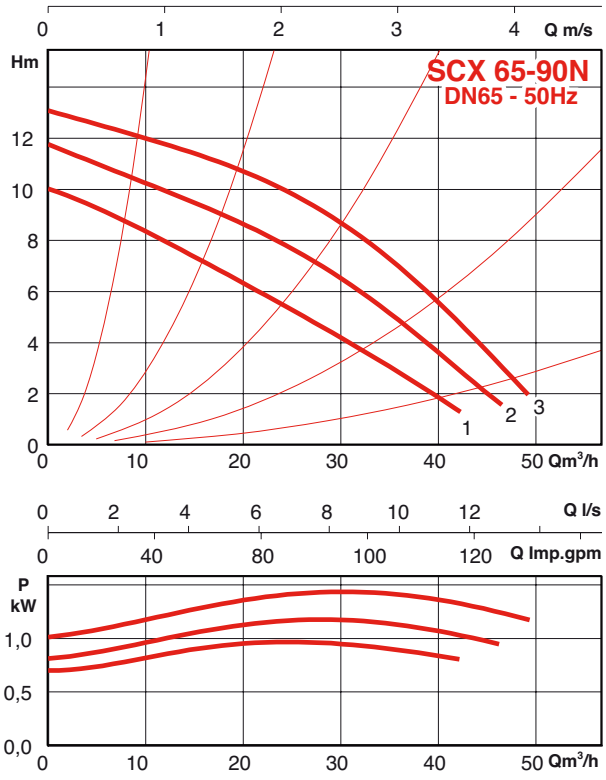

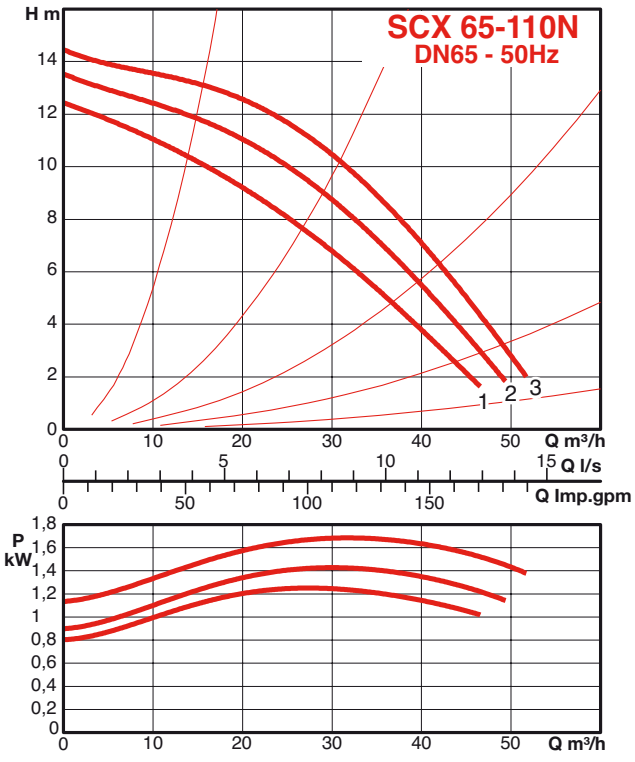

SCX - SINGLE CIRCULATORS - 2 POLE - THREE-PHASE 50 HZ

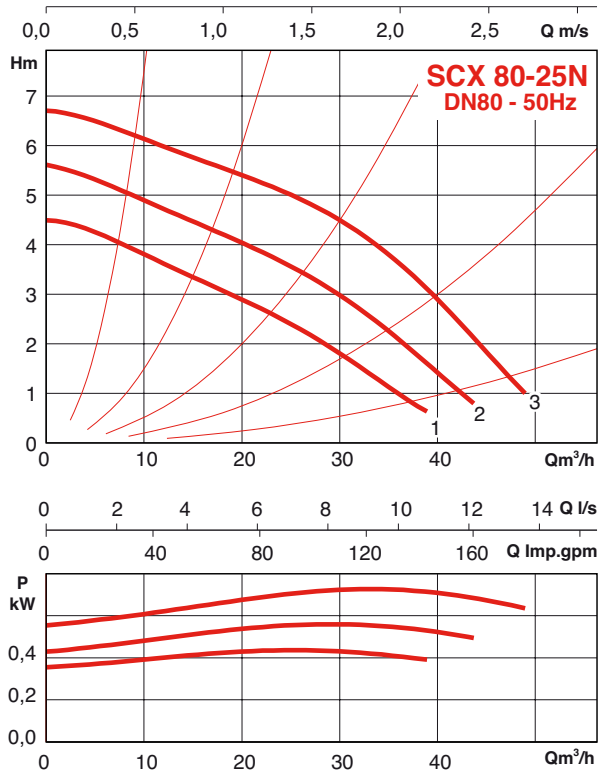

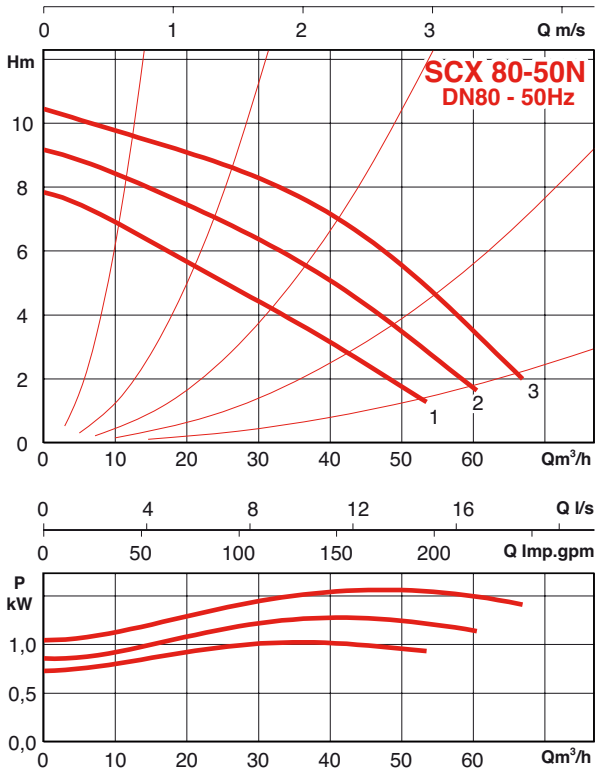

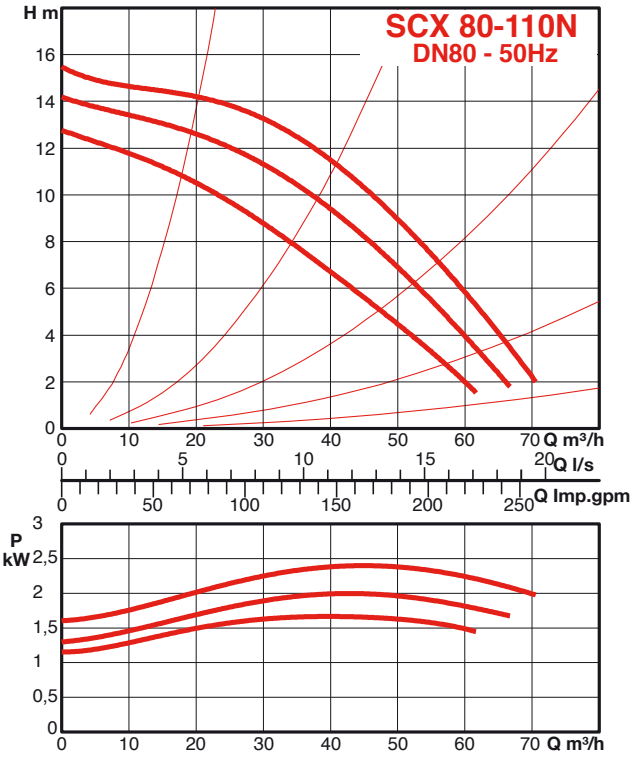

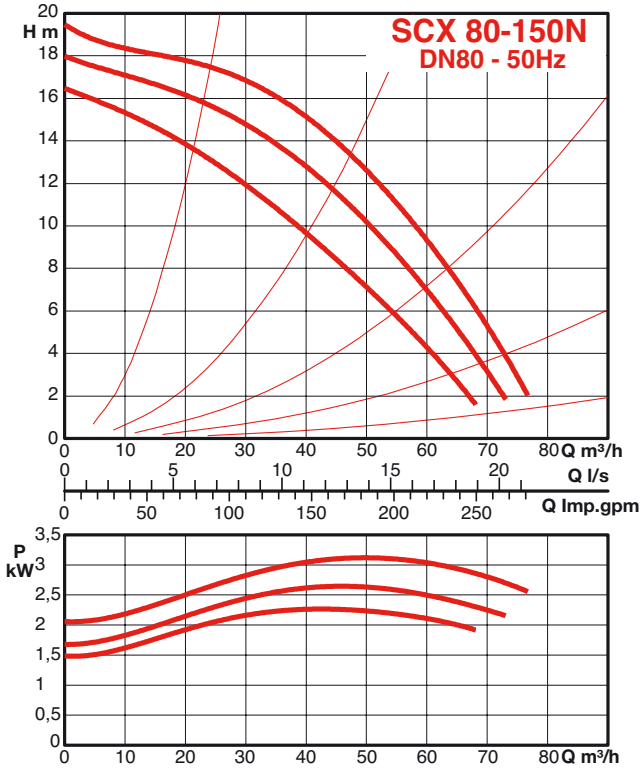

SCX-DCX - SXM-DXM

SCX - SINGLE CIRCULATORS - 2 POLE - THREE-PHASE 50 HZ

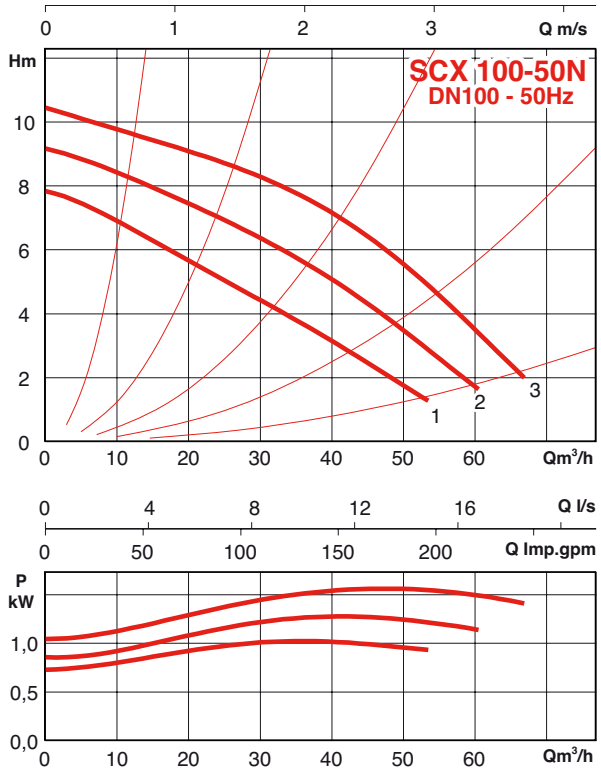

DCX - TWIN CIRCULATORS - 2 POLE - THREE-PHASE 50 HZ

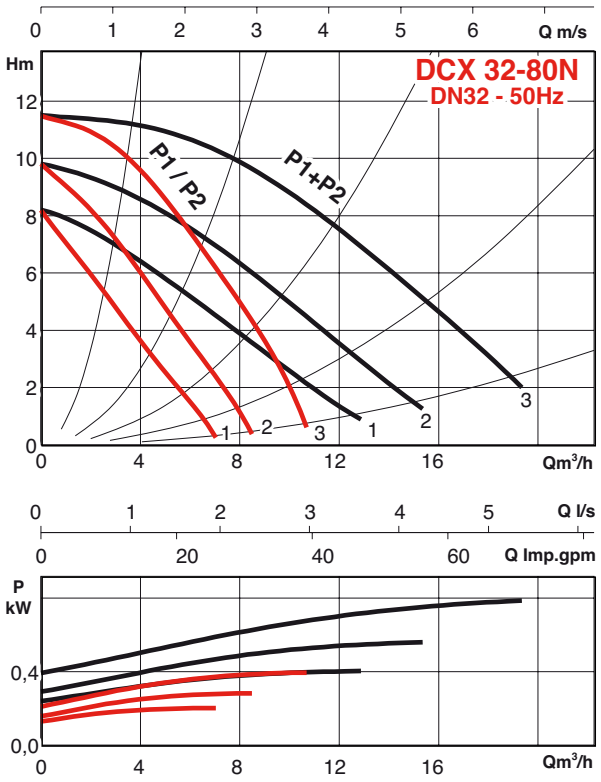

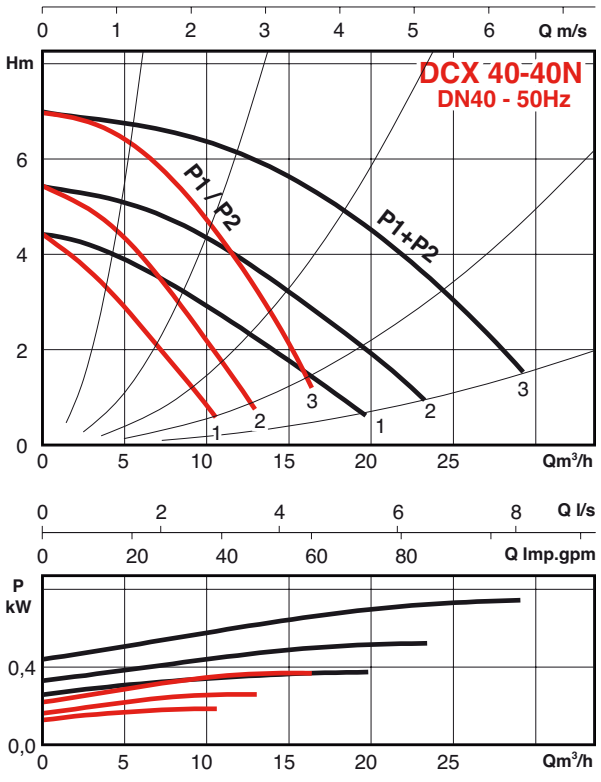

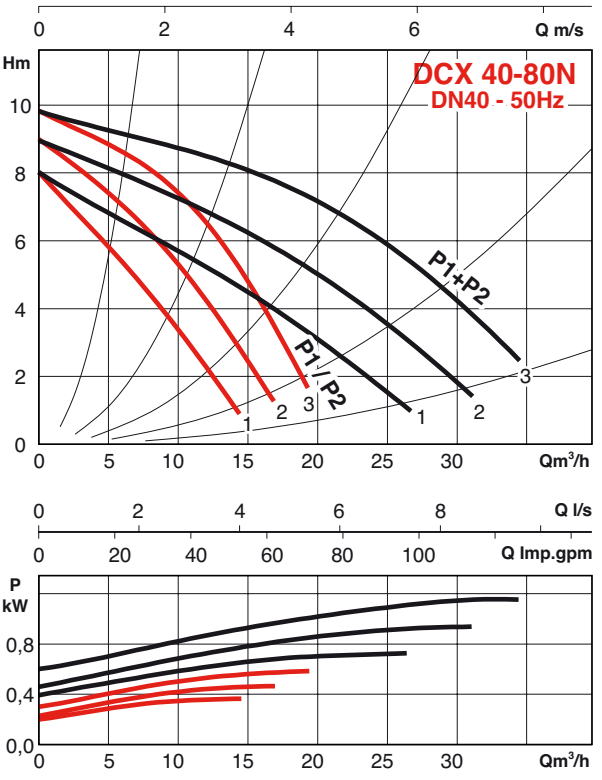

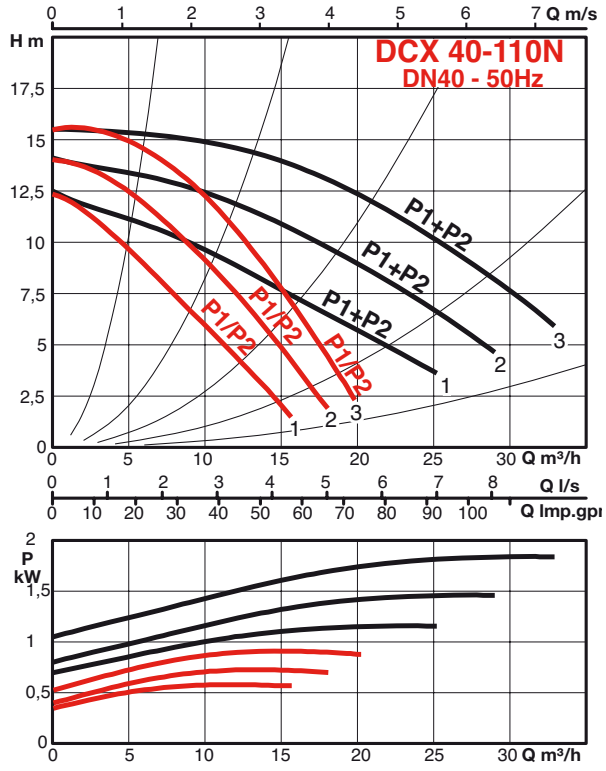

SCX-DCX - SXM-DXM

DCX - TWIN CIRCULATORS - 2 POLE - THREE-PHASE 50 HZ

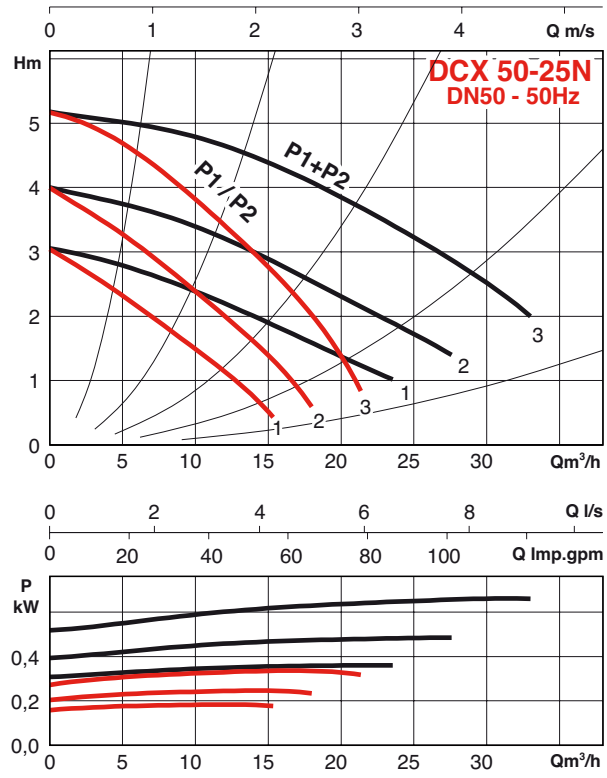

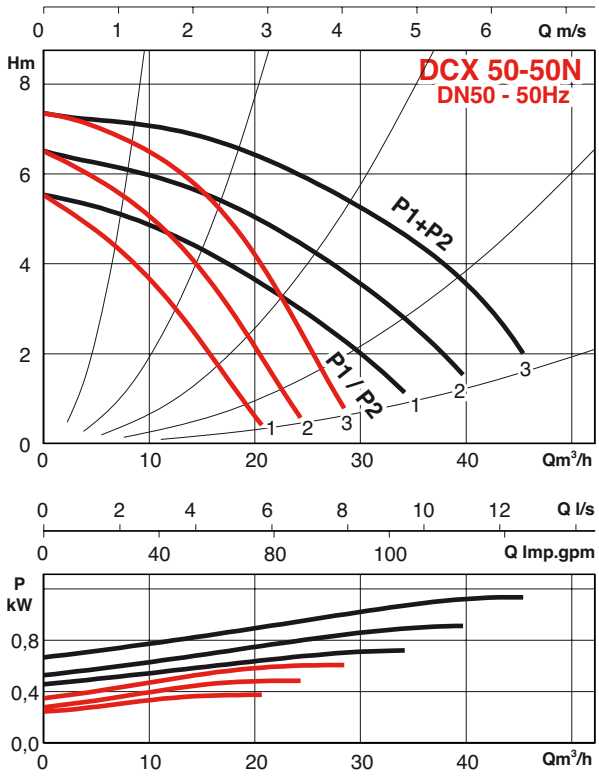

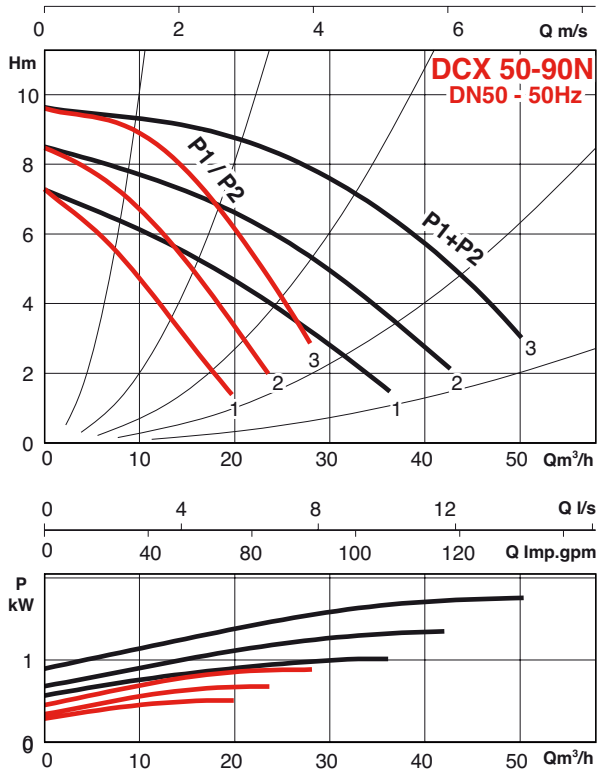

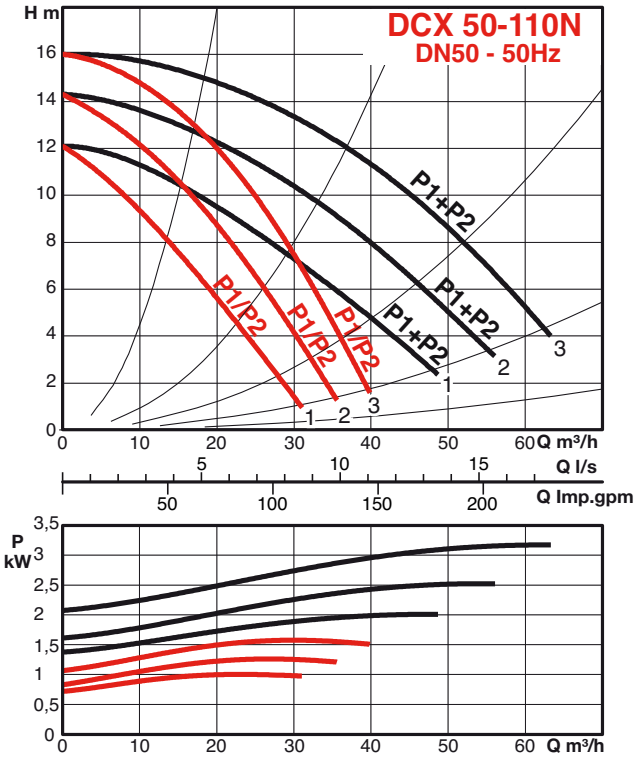

DCX - TWIN CIRCULATORS - 2 POLE - THREE-PHASE 50 HZ

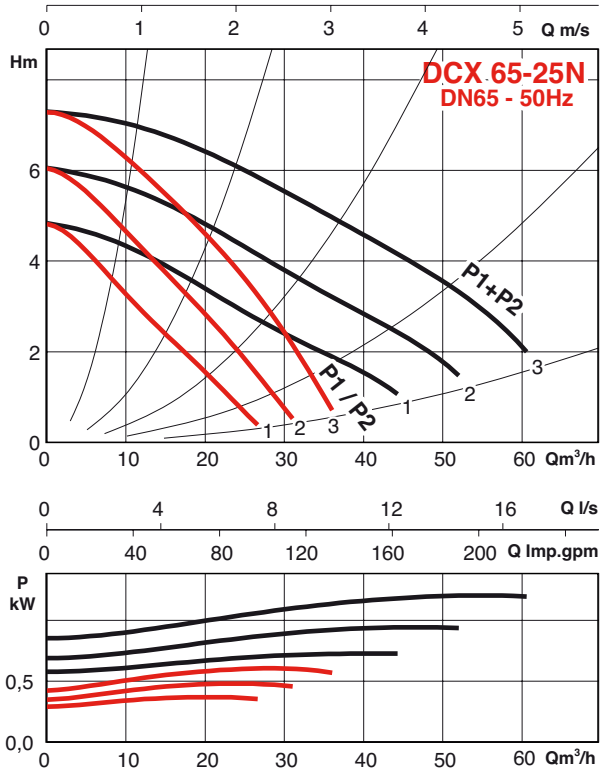

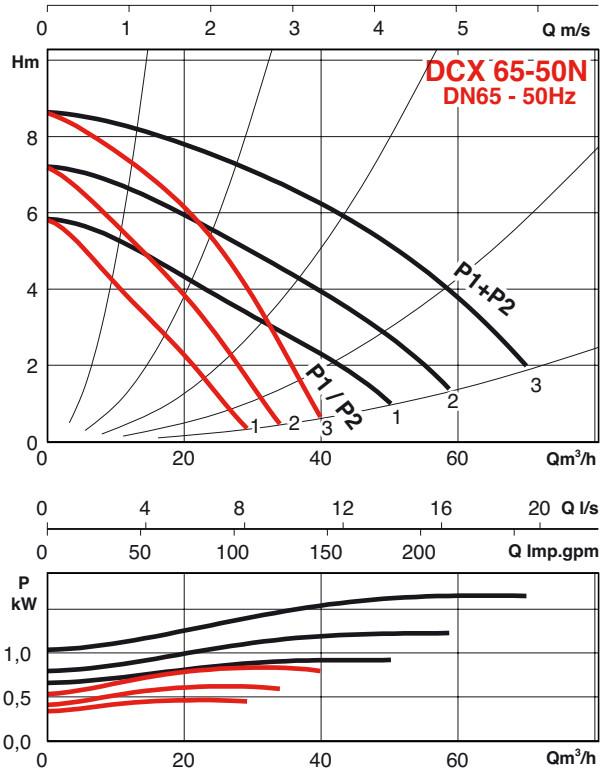

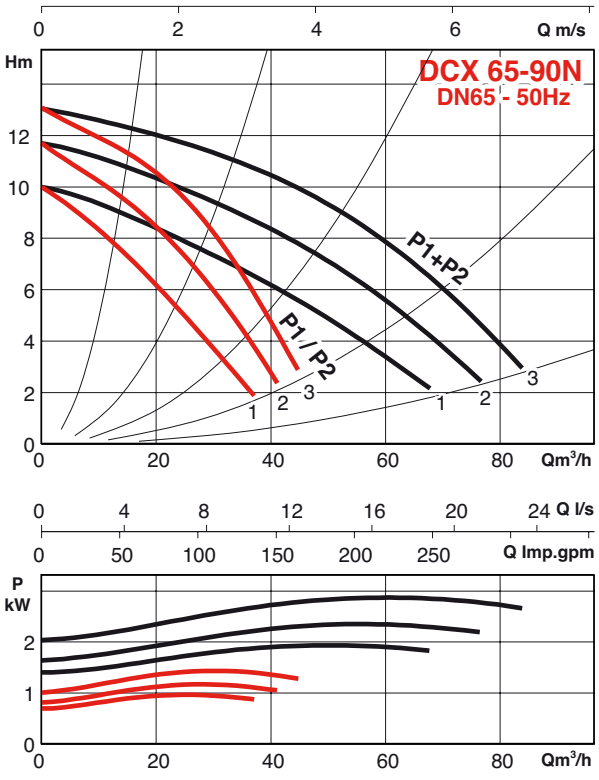

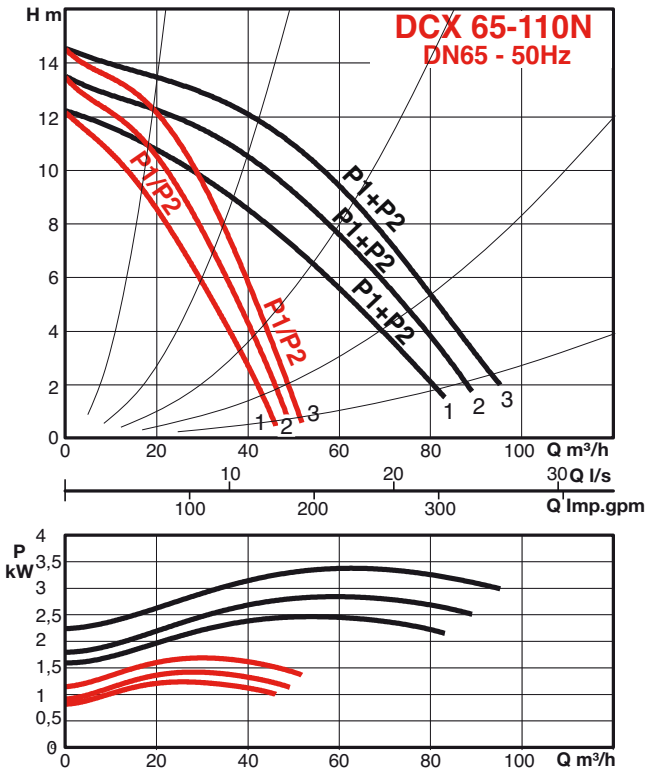

SCX-DCX - SXM-DXM

DCX - TWIN CIRCULATORS - 2 POLE - THREE-PHASE 50 HZ

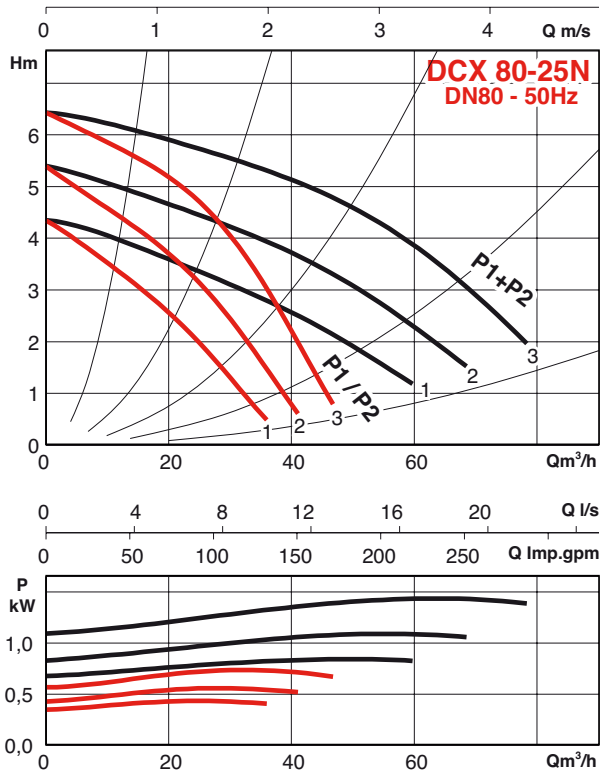

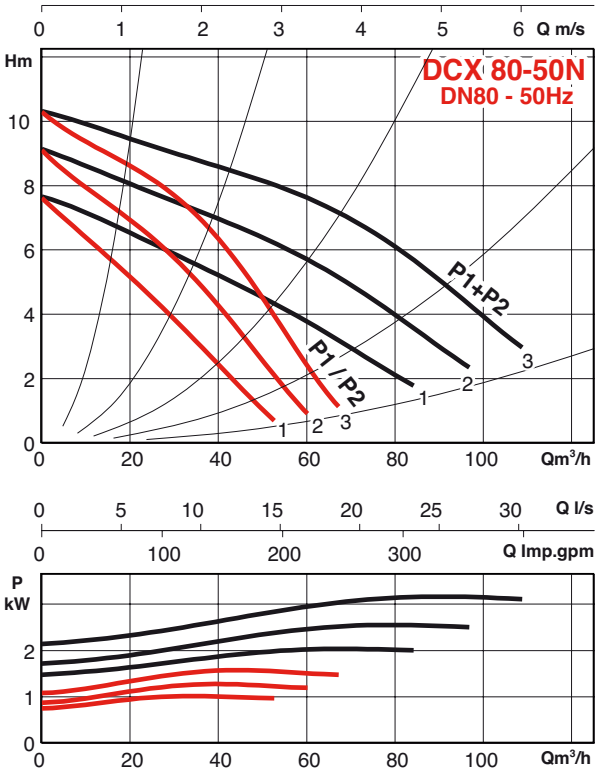

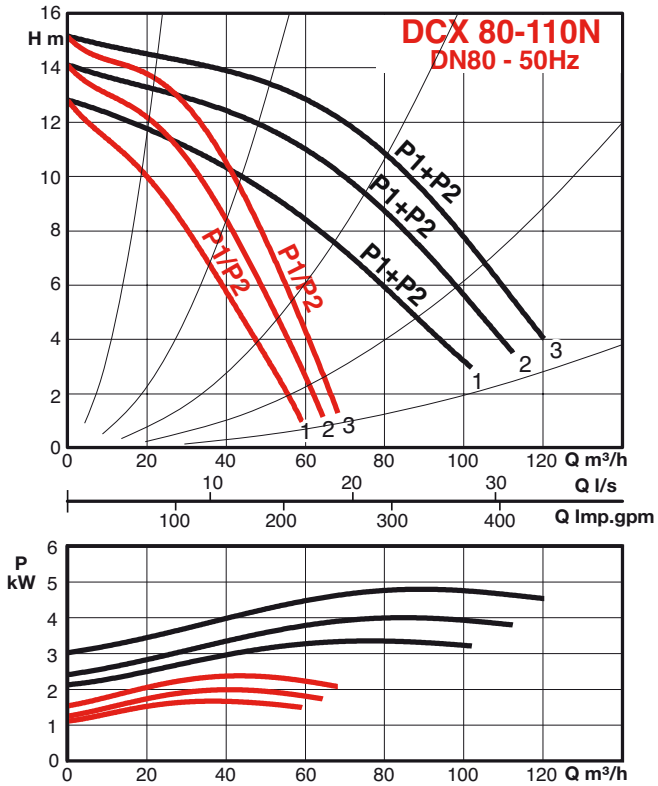

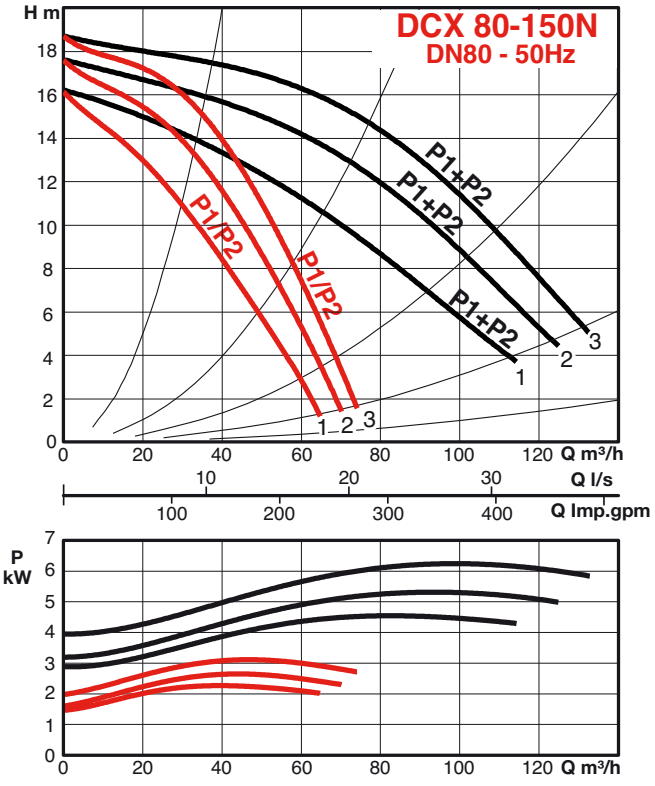

NB: The hydraulic curves above and on the previous pages give the hydraulic characteristics for one head in operation (P1 or P2) and for both heads in parallel (P1 + P2).

OPERATION

• Alternating operation

pump 1 or pump 2 in operation

One head on standby ensures operating reliability with no stoppage of the installation

Operation of the pumps programmed and switched over by control box.

• Parallel operation

Parallel operation of both heads for the flowrate required, allows substantially lower purchase and operating costs.

A single head in operation provides about 85% of the capacity the installation needs during the heating season.

The maximum hydraulic performance needed is delivered by parallel operation of both heads.

A control box is used for programming.

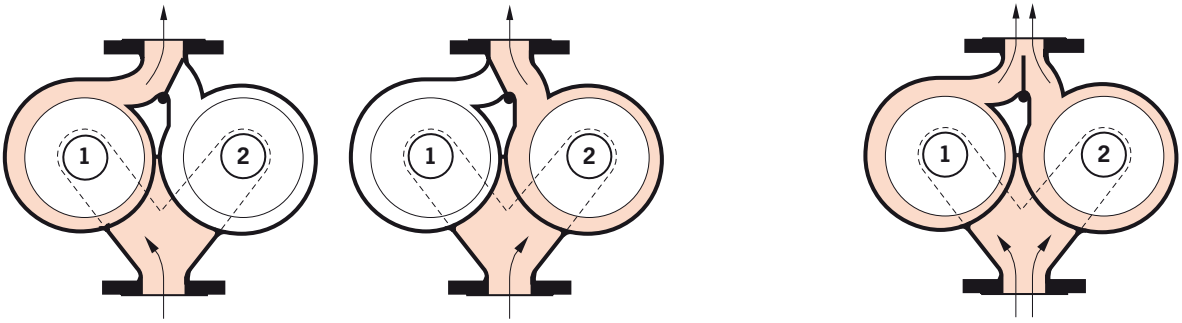

SXM - SINGLE CIRCULATORS - 2 POLE - SINGLE-PHASE 50 HZ

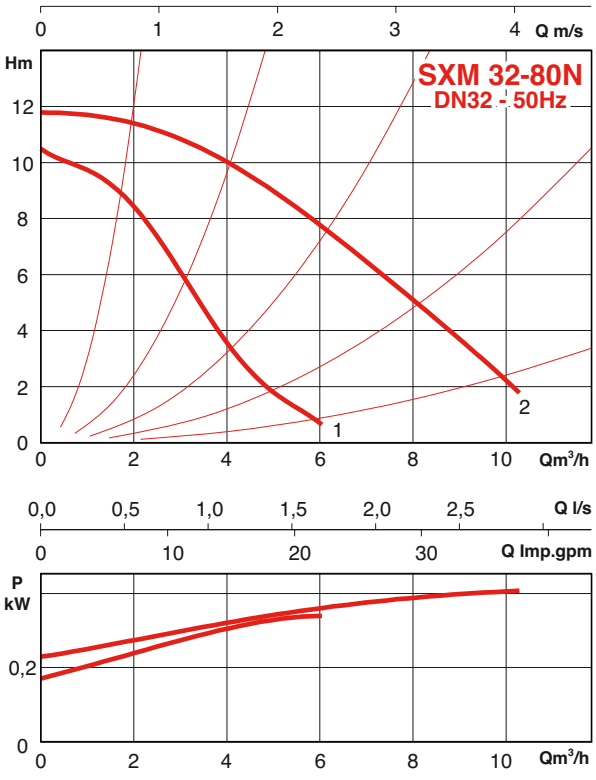

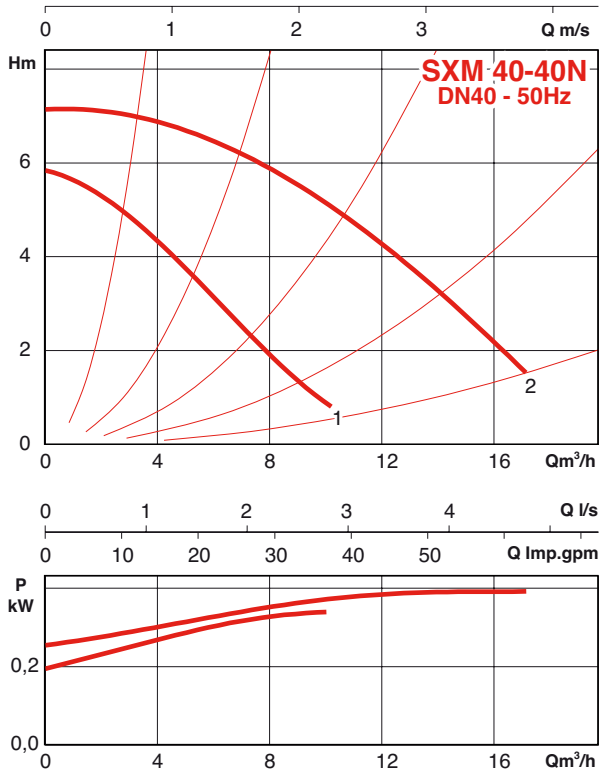

SCX-DCX - SXM-DXM

SXM - SINGLE CIRCULATORS - 2 POLE - SINGLE-PHASE 50 HZ

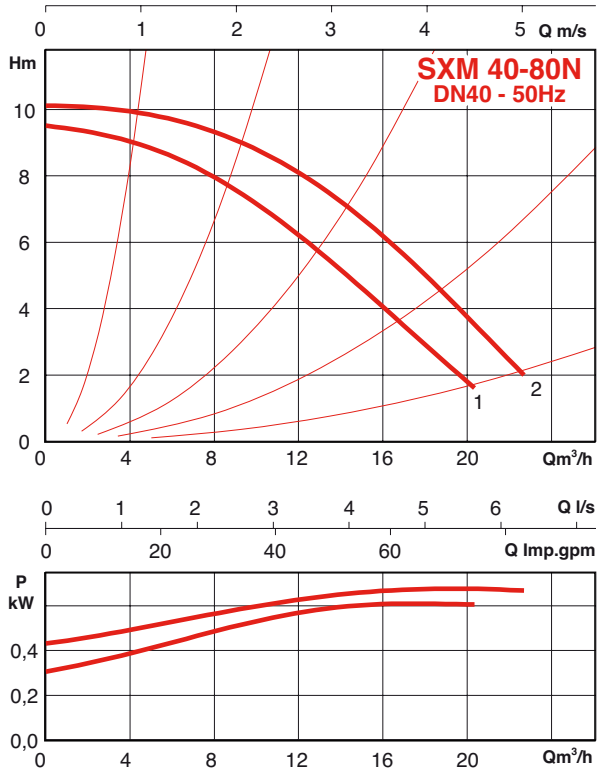

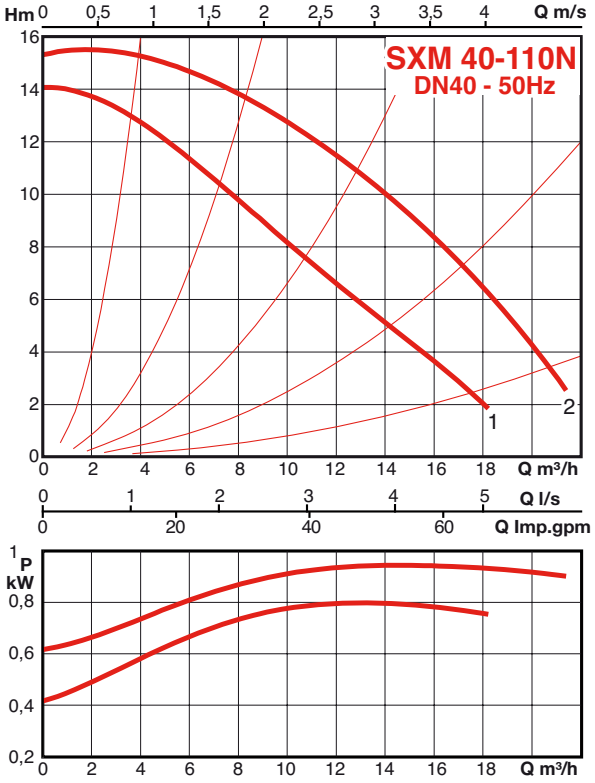

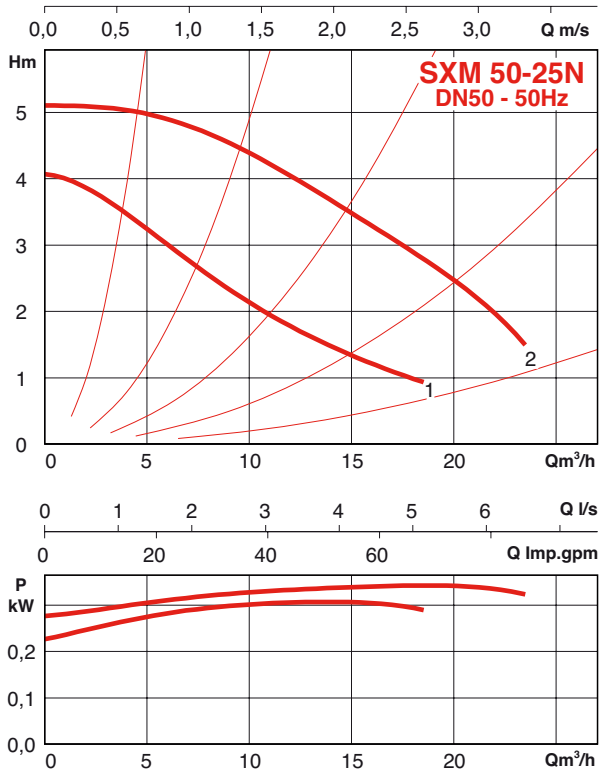

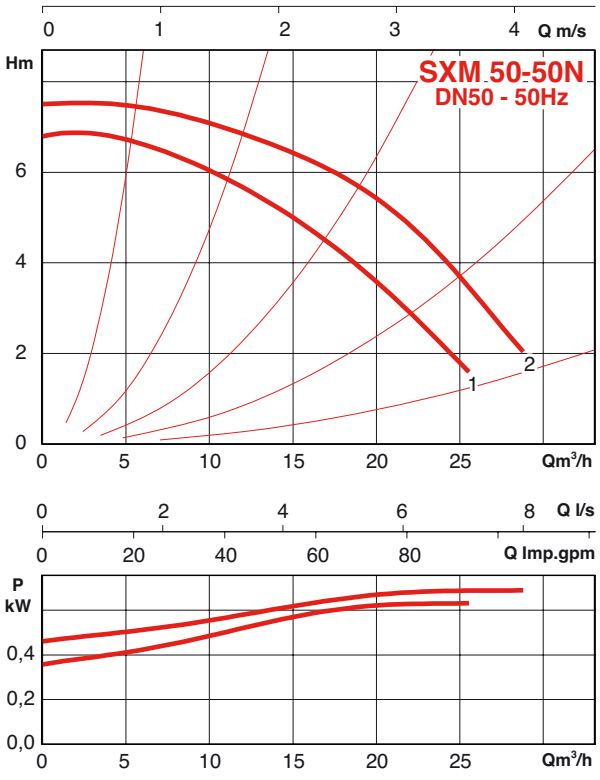

SXM - SINGLE CIRCULATORS - 2 POLE - SINGLE-PHASE 50 HZ

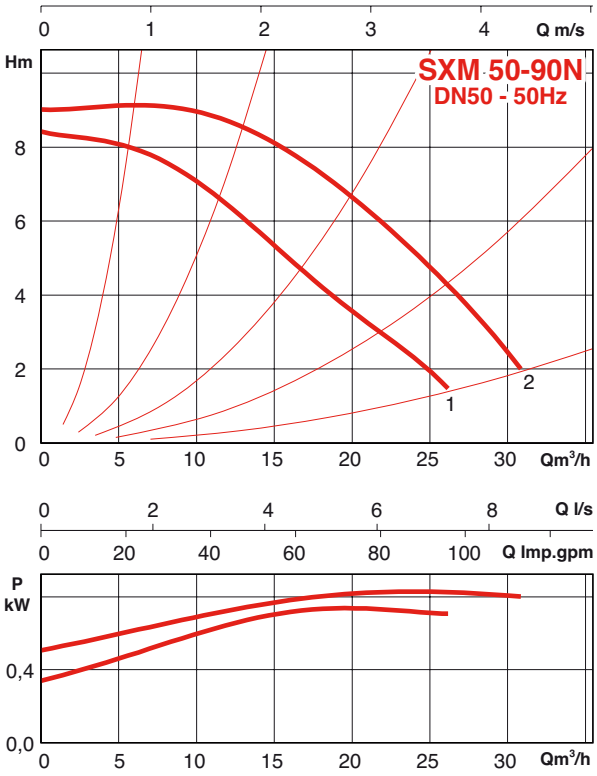

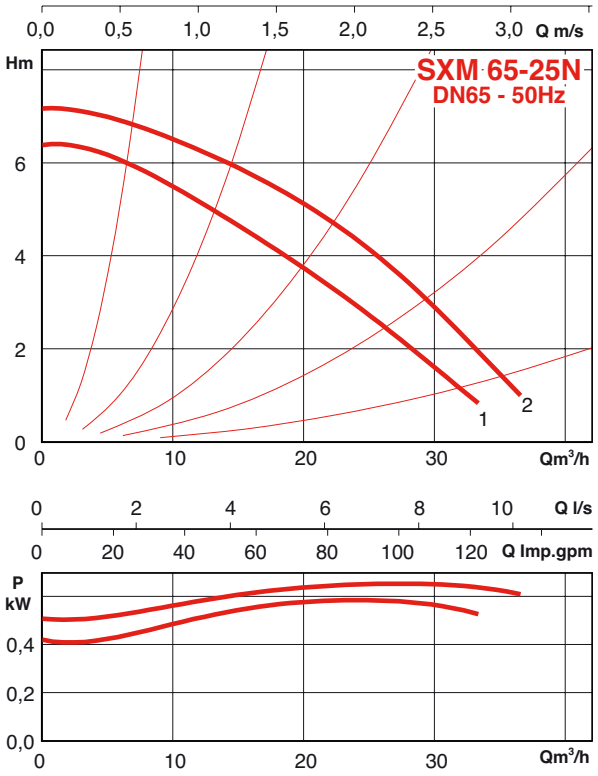

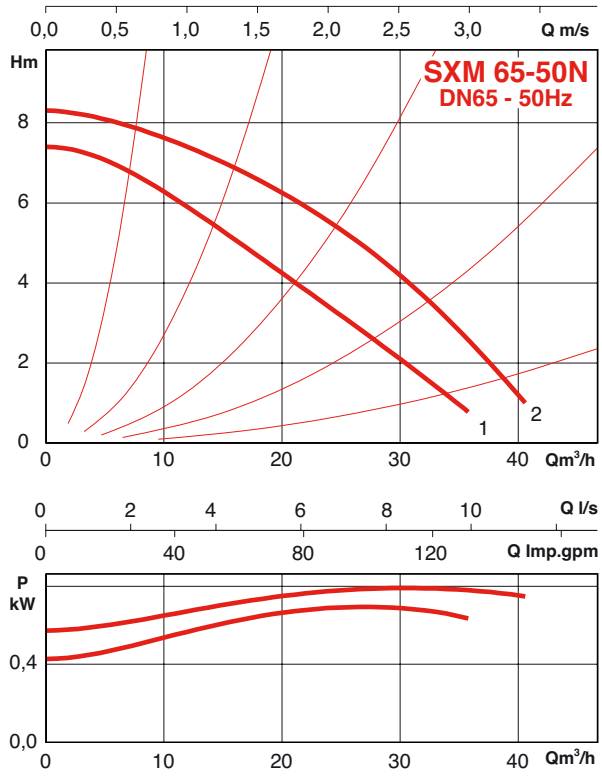

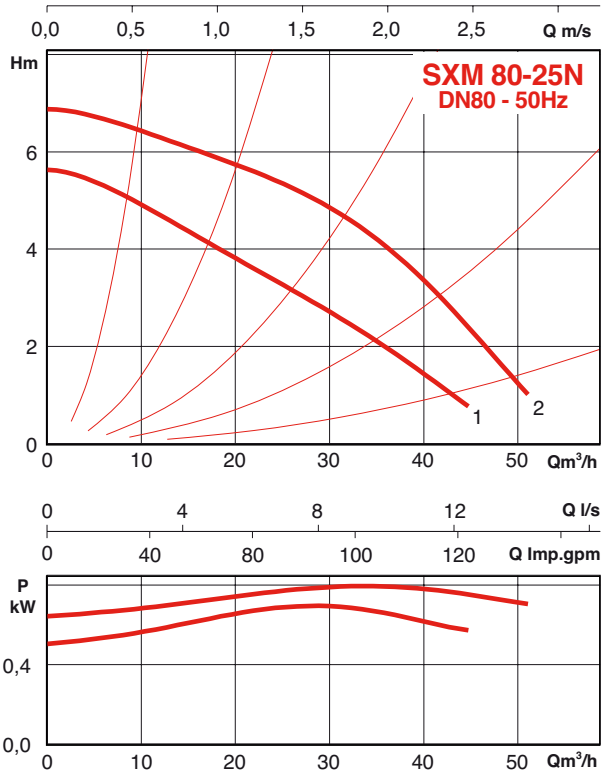

SCX-DCX - SXM-DXM

DXM - TWIN CIRCULATORS - 2 POLE - SINGLE-PHASE 50 HZ

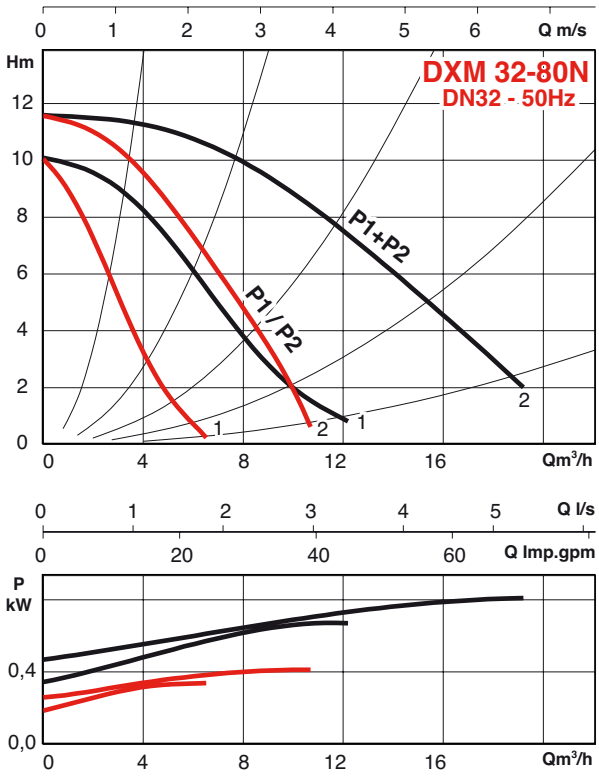

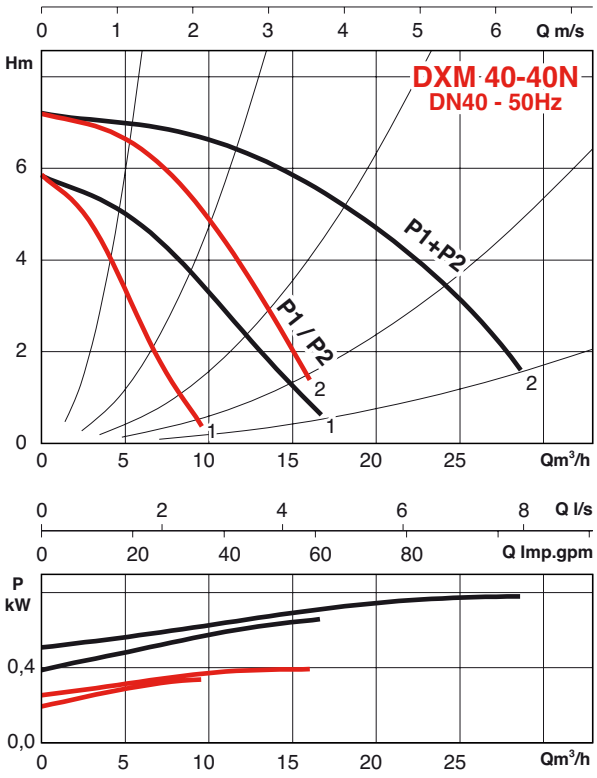

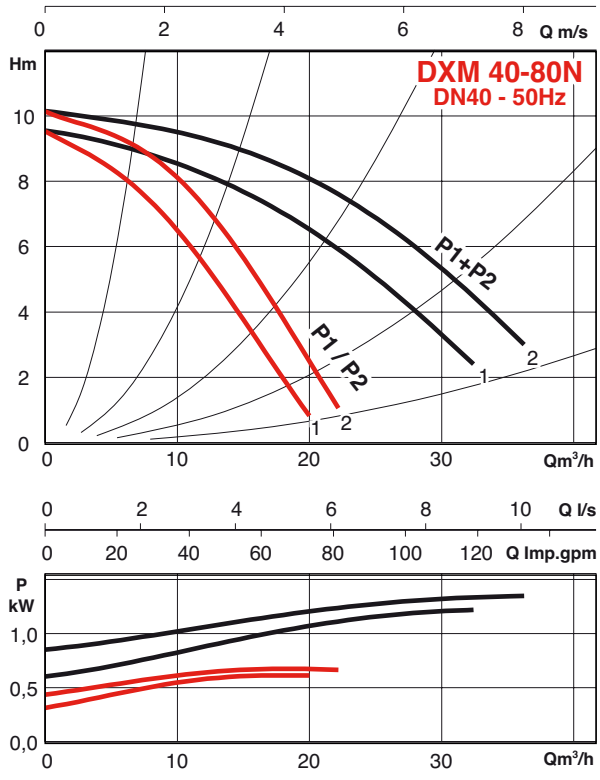

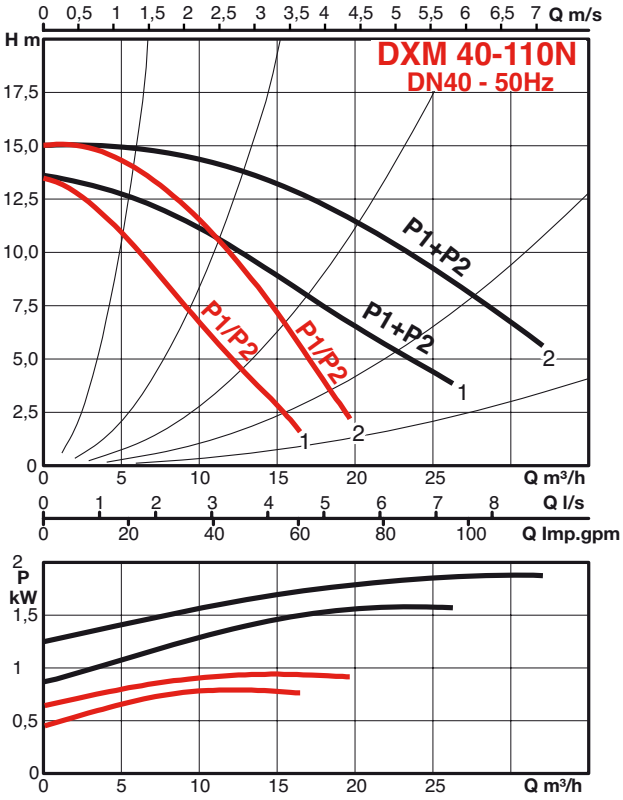

DXM - TWIN CIRCULATORS - 2 POLE - SINGLE-PHASE 50 HZ

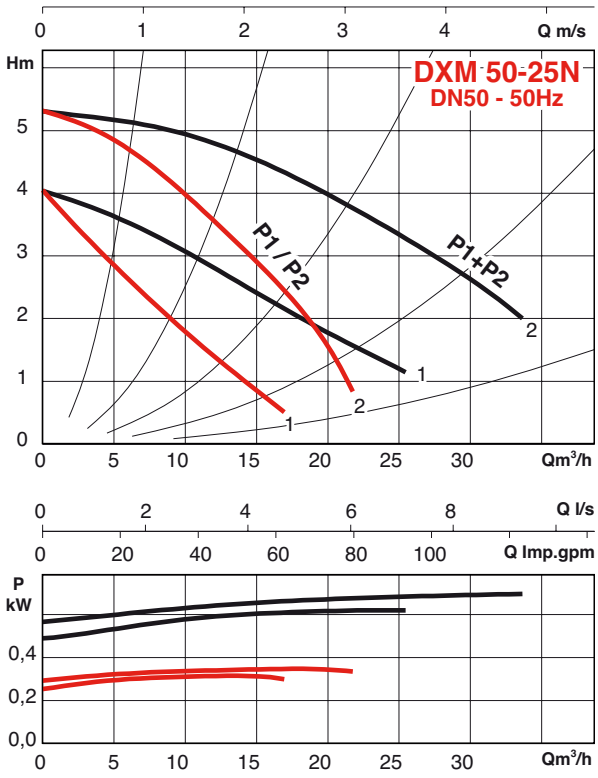

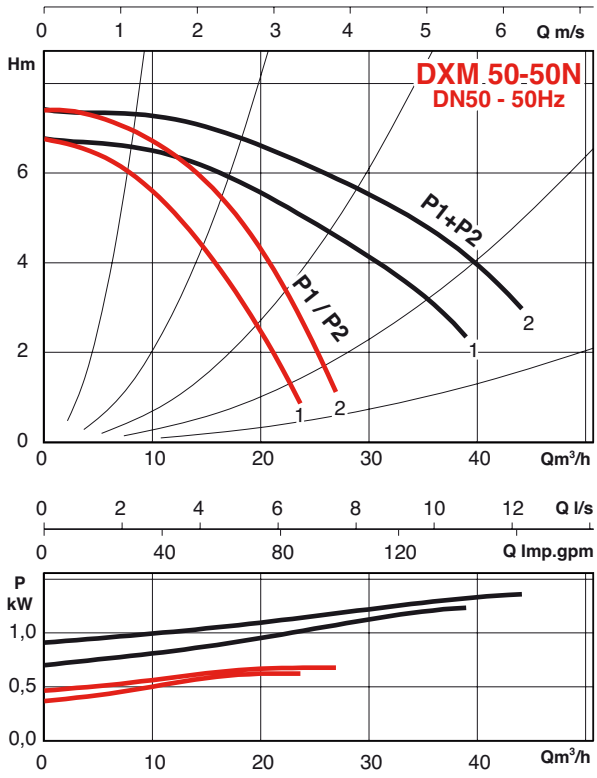

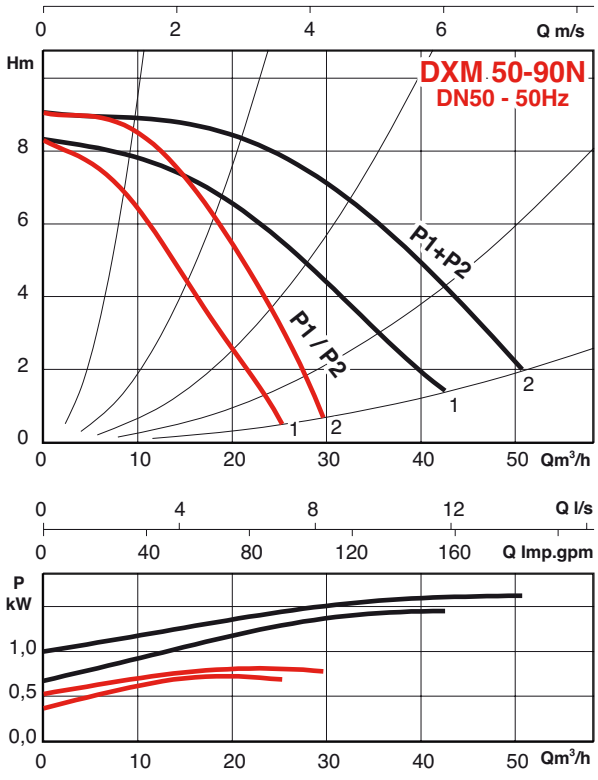

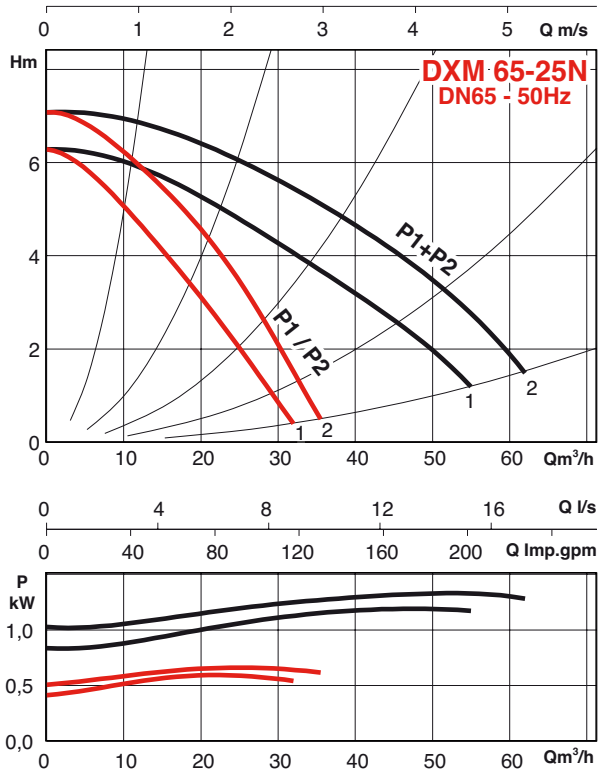

SCX-DCX - SXM-DXM

DXM - TWIN CIRCULATORS - 2 POLE - SINGLE-PHASE 50 HZ

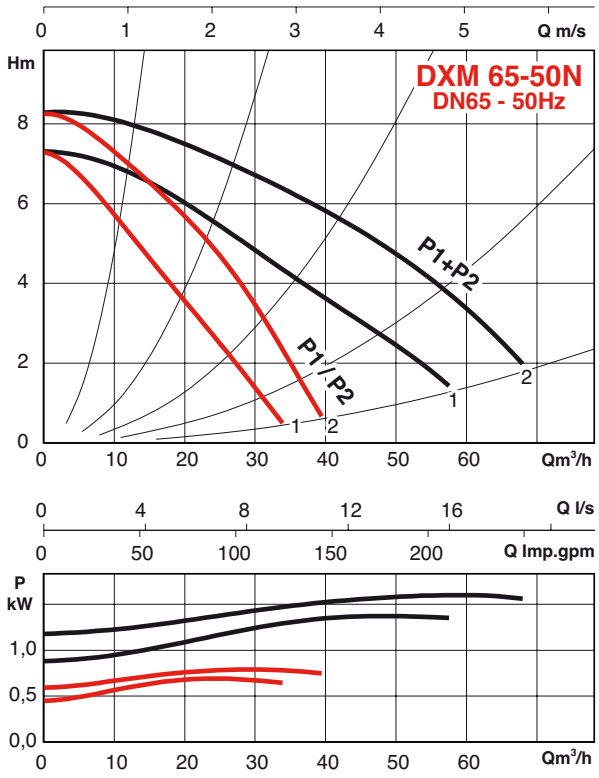

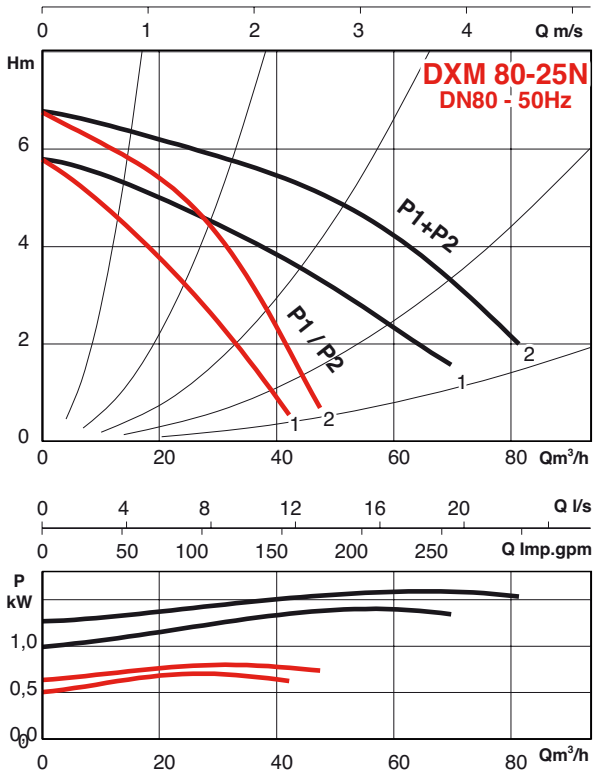

OPERATION

• Alternating operation

pump 1 or pump 2 in operation

One head on standby ensures operating reliability with no stoppage of the installation

Operation of the pumps programmed and switched over by control box.

• Parallel operation

Parallel operation of both heads for the flowrate required, allows substantially lower purchase and operating costs.

A single head in operation provides about 85% of the capacity the installation needs during the heating season.

The maximum hydraulic performance needed is delivered by parallel operation of both heads.

A control box is used for programming.

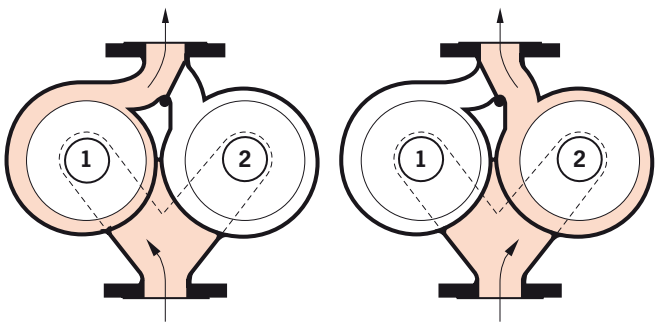

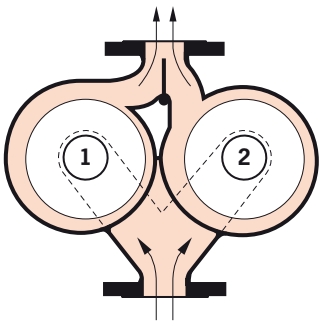

DIMENSIONS - SCX - THREE-PHASE 50 HZ

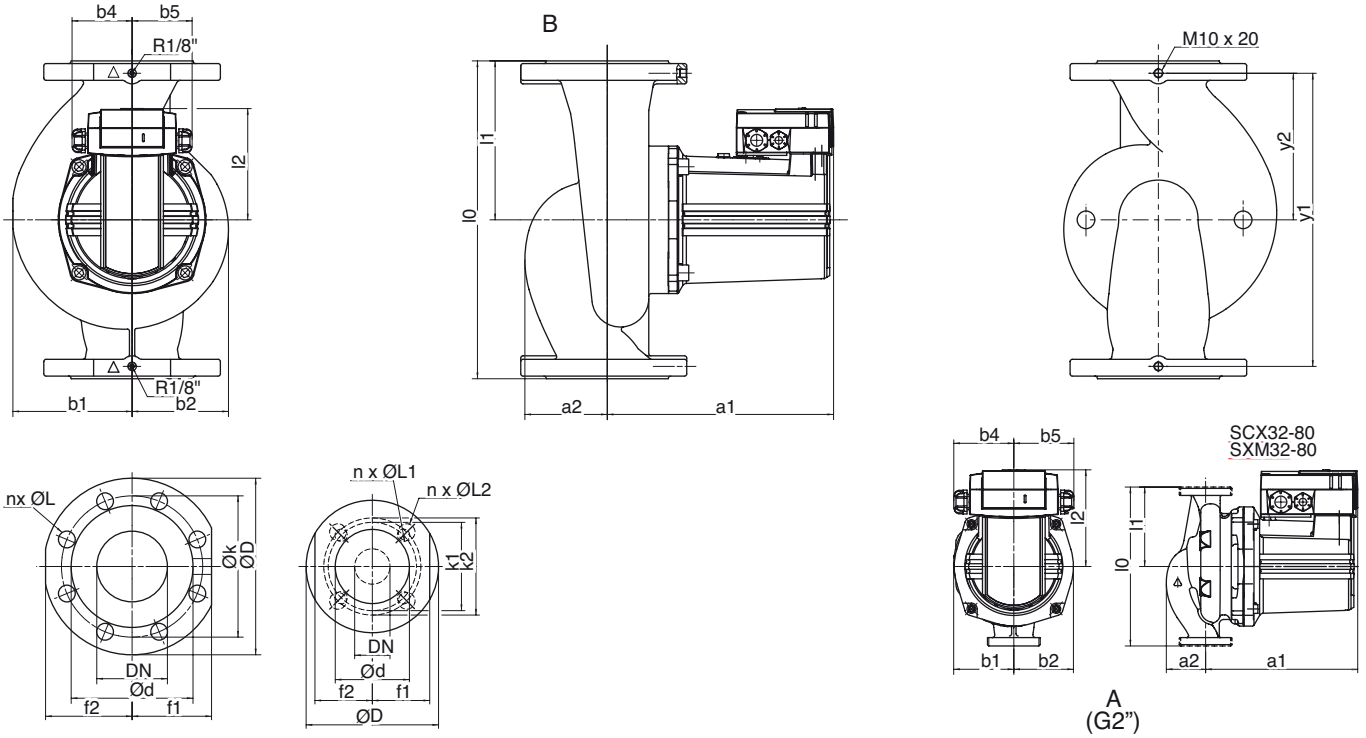

FLANGES PN 6 / 10 COMBIFLANGE

DN	FLANGES	Ø D	Ø k 1	Ø k 2	Ø d	holes	holes
		mm	mm	mm	mm	n x ØL1	n x ØL2
40	PN 6 / 10	150	100	110	84	4 x 14	4 x 19
50	PN 6 / 10	165	110	125	99	4 x 14	4 x 19
65	PN 6 / 10	185	130	145	118	4 x 14	4 x 19

FLANGES PN 10 / 16 EN 1092-2

DN	FLANGES	Ø D	Ø k	Ø d	holes
		mm	mm	mm	n x ØL
80	PN 10	200	160	132	8 x 19
100	PN 10	220	180	156	8 x 19

Order reference	DN	l0	l1	l2	a1	a2	b1	b2	b4	b5	f1	f2	y1	y2	mass approx.	drawing
	ports	mm	mm	mm	mm	mm	mm	mm	mm	mm	mm	mm	mm	mm	kg	
SCX32-80N	32	180	90	108	172	45	69	69	69	69	60	60	-	-	7	A
SCX40-40N PN6/10	40	250	125	108	193	46	78	68	69	69	65	65	220	110	12	B
SCX40-80N PN6/10	40	250	125	115	216	59	90	80	69	69	65	65	220	110	16	B
SCX40-110N PN6/10	40	250	125	125	258	55	99	86	69	69	65	65	220	110	21	B
SCX50-25N PN6/10	50	280	140	108	200	53	94	68	69	69	70	70	220	110	14	B
SCX50-50N PN6/10	50	280	140	115	224	65	91	77	69	69	70	70	250	125	18	B
SCX50-90N PN6/10	50	280	140	115	222	71	101	87	69	69	70	75	250	125	19	B
SCX50-110N PN6/10	50	340	170	125	235	81	105	90	69	69	75	83	310	155	26	B
SCX65-25N PN6/10	65	340	170	115	235	67	110	89	69	69	80	80	310	155	22	B
SCX65-50N PN6/10 (450W)	65	340	170	115	235	67	110	89	69	69	80	80	310	155	24	B
SCX65-90N PN6/10	65	340	170	125	254	81	118	98	69	69	80	80	310	155	28	B
SCX65-110N PN6/10	65	340	170	125	254	81	118	98	69	69	80	80	310	155	29	B
SCX80-25N PN10 (450W)	80	360	180	115	227	80	116	89	69	69	90	90	330	165	26	B
SCX80-50N PN10	80	360	180	125	258	95	135	108	69	69	90	98	330	165	31	B
SCX80-110N PN10	80	360	180	150	316	89	129	108	69	69	90	90	330	165	42	B
SCX80-150N PN10	80	360	180	150	316	89	129	108	69	69	90	90	330	165	45	B
SCX100-50N PN10	100	360	180	125	258	95	135	108	69	69	90	98	330	165	35	B

SCX-DCX - SXM-DXM

ELECTRICAL DATA - SCX - THREE-PHASE 50 HZ

Order reference	P2	speed position		Motor P1		current in A 3 phase	
	W		rpm	Wmin	Wmax	230V	400V
SCX32-80N	180	3	2600	195	400	1.37	0.79
		2	2200	145	280	0.84	0.49
		1	1800	120	200	0.61	0.35
SCX40-40N PN6/10	180	3	2600	220	370	1.31	0.76
		2	2100	165	260	0.81	0.47
		1	1800	130	185	0.57	0.33
SCX40-80N PN6/10	350	3	2800	300	585	2.02	1.17
		2	2500	230	465	1.43	0.82
		1	2200	200	365	1.12	0.65
SCX40-110N PN6/10	570	3	2800	500	905	3.19	1.84
		2	2500	380	720	2.25	1.30
		1	2200	330	585	1.82	1.05
SCX50-25N PN6/10	180	3	2650	250	330	1.23	0.71
		2	2200	190	240	0.76	0.44
		1	1900	150	180	0.56	0.32
SCX50-50N PN6/10	350	3	2800	360	610	2.06	1.19
		2	2450	285	470	1.43	0.83
		1	2150	245	375	1.14	0.66
SCX50-90N PN6/10	450	3	2700	450	880	3.0	1.73
		2	2300	330	680	2.09	1.2
		1	2000	280	500	1.54	0.89
SCX50-110N PN6/10	1100	3	2800	1060	1570	5.43	3.13
		2	2500	830	1260	3.90	2.25
		1	2200	720	1005	3.14	1.81
SCX65-25N PN6/10	350	3	2750	420	610	2.06	1.19
		2	2350	340	480	1.47	0.85
		1	2050	290	370	1.14	0.66
SCX65-50N PN6/10 (450W)	450	3	2650	525	845	2.89	1.67
		2	2250	410	630	1.91	1.1
		1	1950	340	470	1.44	0.83
SCX65-90N PN6/10	1100	3	2800	1000	1450	5.07	2.93
		2	2550	810	1180	3.64	2.1
		1	2250	700	960	3.0	1.74
SCX65-110N PN6/10	1300	3	2850	1170	1685	5.91	3.41
		2	2650	925	1425	4.38	2.53
		1	2400	815	1210	3.78	2.18
SCX80-25N PN10 (450W)	450	3	2700	560	730	2.65	1.53
		2	2400	430	560	1.74	1.0
		1	2100	350	440	1.36	0.79
SCX80-50N PN10	1100	3	2800	1070	1570	5.33	3.08
		2	2500	870	1280	3.91	2.26
		1	2150	750	1010	3.13	1.81
SCX80-110N PN10	1800	3	2900	1600	2400	-	4.85
		2	2700	1300	2000	-	3.63
		1	2450	1160	1680	-	3.25
SCX80-150N PN10	2200	3	2900	2050	3120	-	6.10
		2	2750	1670	2650	-	4.80
		1	2500	1480	2270	-	4.35
SCX100-50N PN10	1100	3	2800	1070	1570	5.33	3.08
		2	2500	870	1280	3.91	2.26
		1	2150	750	1010	3.13	1.81

DIMENSIONS - DCX - THREE-PHASE 50 HZ

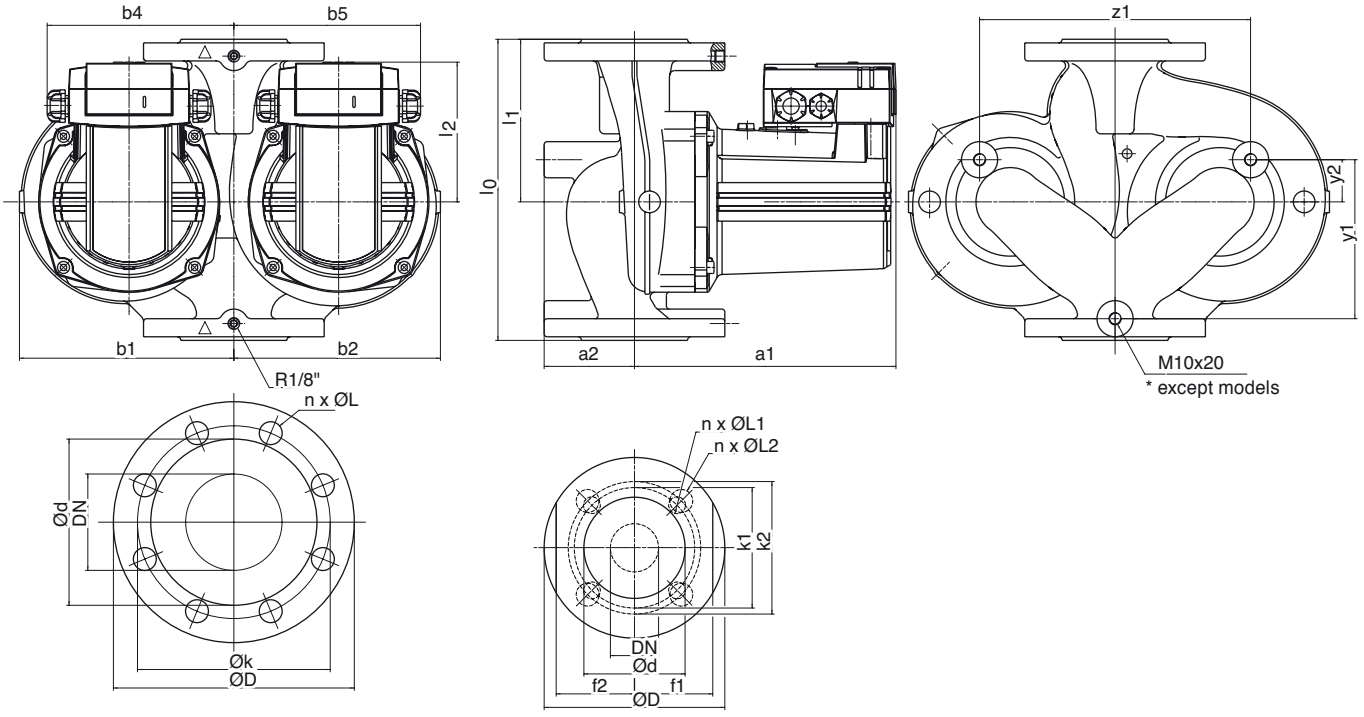

FLANGES PN 6 / 10 COMBIFLANGE

DN	FLANGES	Ø D	Ø k 1	Ø k 2	Ø d	holes	holes
		mm	mm	mm	mm	n x ØL1	n x ØL2
32	PN 6 / 10	140	90	100	76	4 x 14	4 x 19
40	PN 6 / 10	150	100	110	84	4 x 14	4 x 19
50	PN 6 / 10	165	110	125	99	4 x 14	4 x 19
65	PN 6 / 10	185	130	145	118	4 x 14	4 x 19

FLANGES PN 10 / 16 EN 1092-2

DN	FLANGES	Ø D	Ø k	Ø d	holes
		mm	mm	mm	n x ØL
80	PN 10	200	160	132	8 x 19

Order reference	DN	l0	l1	l2	a1	a2	b1	b2	b4	b5	z1	y1	y2	f1	f2	mass approx.
	ports	mm	mm	mm	mm	mm	mm	mm	mm	mm	mm	mm	mm	mm	mm	kg
DCX32-80N PN6/10*	32	220	110	108	172	60	144	143	146	146	172	107	11	60	60	18
DCX40-40N PN6/10*	40	250	135	108	193	75	150	143	146	146	172	108	11	-	-	20
DCX40-80N PN6/10*	40	250	135	115	216	75	178	172	156	156	225	132	35	-	-	29
DCX40-110N PN6/10	40	250	125	125	258	65	200	195	175	175	225	132	25	65	65	40
DCX50-25N PN6/10*	50	280	155	108	200	83	178	158	156	156	225	132	25	-	-	23
DCX50-50N PN6/10*	50	280	160	115	224	83	79	169	156	156	225	132	30	-	-	31
DCX50-90N PN6/10*	50	280	155	115	222	83	198	192	166	166	228	157	50	-	-	33
DCX50-110N PN6/10	50	340	170	119	243	86	209	200	173	173	252	184	30	-	-	50
DCX65-25N PN6/10	65	340	170	115	235	81	214	201	175	175	225	180	25	80	80	37
DCX65-50N PN6/10 (450W)	65	340	170	115	235	81	214	201	175	175	225	180	25	80	80	40
DCX65-90N PN6/10	65	340	185	125	254	93	223	209	175	175	225	162	25	-	-	49
DCX65-110N PN6/10	65	340	185	125	254	93	223	209	175	175	225	162	25	-	-	56
DCX80-25N PN10 (450W)	80	360	180	115	227	88	226	210	184	184	280	198	33	90	90	46
DCX80-50N PN10	80	360	205	125	256	100	249	231	187	187	240	180	43	-	-	55
DCX80-110N PN10	80	360	180	150	316	90	259	248	204	204	270	185	20	90	90	79
DCX80-150N PN10	80	360	180	150	316	90	259	248	204	204	270	185	20	90	90	85

* For these models, drilling on demand.

SCX-DCX - SXM-DXM

ELECTRICAL DATA - DCX - THREE-PHASE 50 HZ

Order reference	P2	speed position		Motor P1		current in A 3 phase	
	W		rpm	Wmin	Wmax	230V	400V
DCX32-80N PN6/10	180	3	2600	210	400	1.37	0.79
		2	2200	160	280	0.84	0.49
		1	1800	130	200	0.61	0.35
DCX40-40N PN6/10	180	3	2600	220	370	1.31	0.76
		2	2100	165	260	0.81	0.47
		1	1800	130	185	0.57	0.33
DCX40-80N PN6/10	350	3	2800	300	585	2.02	1.17
		2	2500	230	465	1.43	0.82
		1	2200	200	365	1.12	0.65
DCX40-110N PN6/10	570	3	2800	500	905	3.19	1.84
		2	2500	380	720	2.25	1.30
		1	2200	330	585	1.82	1.05
DCX50-25N PN6/10	180	3	2650	270	330	1.23	0.71
		2	2200	200	240	0.76	0.44
		1	1900	160	180	0.56	0.32
DCX50-50N PN6/10	350	3	2800	360	610	2.06	1.19
		2	2450	285	470	1.43	0.83
		1	2150	245	375	1.14	0.66
DCX50-90N PN6/10	450	3	2700	450	880	3.0	1.73
		2	2300	330	680	2.09	1.2
		1	2000	280	500	1.54	0.89
DCX50-110N PN6/10	1100	3	2800	1060	1570	5.43	3.13
		2	2500	830	1260	3.90	2.25
		1	2200	720	1005	3.14	1.81
DCX65-25N PN6/10	350	3	2750	420	610	2.06	1.19
		2	2350	340	480	1.47	0.85
		1	2050	290	370	1.14	0.66
DCX65-50N PN6/10 (450W)	450	3	2650	525	845	2.89	1.67
		2	2250	410	630	1.91	1.1
		1	1950	340	470	1.44	0.83
DCX65-90N PN6/10	1100	3	2800	1000	1450	5.07	2.93
		2	2550	810	1180	3.64	2.1
		1	2250	700	960	3.0	1.74
DCX65-110N PN6/10	1300	3	2850	1170	1685	5.91	3.41
		2	2650	925	1425	4.38	2.53
		1	2400	815	1210	3.78	2.18
DCX80-25N PN10 (450W)	450	3	2700	560	730	2.65	1.53
		2	2400	430	560	1.74	1.0
		1	2100	350	440	1.36	0.79
DCX80-50N PN10	1100	3	2800	1070	1570	5.33	3.08
		2	2500	870	1280	3.91	2.26
		1	2150	750	1010	3.13	1.81
DCX80-110N PN10	1800	3	2900	1600	2400	-	4.85
		2	2700	1300	2000	-	3.63
		1	2450	1160	1680	-	3.25
DCX80-150N PN10	2200	3	2900	2050	3120	-	6.10
		2	2750	1670	2650	-	4.80
		1	2500	1480	2270	-	4.35

DIMENSIONS - SXM - SINGLE-PHASE 50 HZ

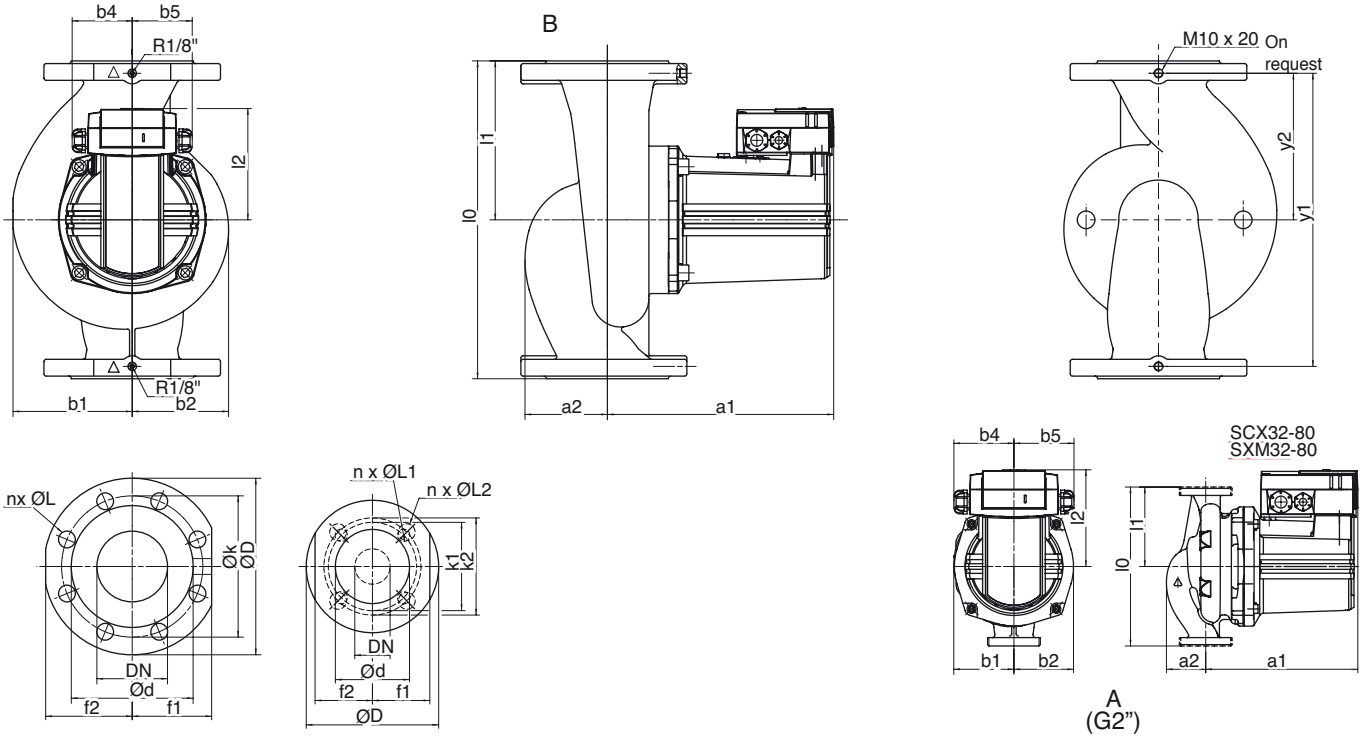

FLANGES PN 6 / 10 COMBIFLANGE

DN	FLANGES	Ø D	Ø k 1	Ø k 2	Ø d	holes	holes
		mm	mm	mm	mm	n x ØL1	n x ØL2
40	PN 6 / 10	150	100	110	84	4 x 14	4 x 19
50	PN 6 / 10	165	110	125	99	4 x 14	4 x 19
65	PN 6 / 10	185	130	145	118	4 x 14	4 x 19

FLANGES PN 10 / 16 EN 1092-2

DN	FLANGES	Ø D	Ø k	Ø d	holes
		mm	mm	mm	n x ØL
80	PN 10	200	160	132	8 x 19
100	PN 10	220	180	156	8 x 19

Order reference	DN	l0	l1	l2	a1	a2	b1	b2	b4	b5	f1	f2	y1	y2	mass approx.	drawing
	ports	mm	mm	mm	mm	mm	mm	mm	mm	mm	mm	mm	mm	mm	kg	
SXM32-80N	32	180	90	108	172	45	69	69	69	69	60	60	-	-	7	A
SXM40-40N PN6/10	40	250	125	108	193	46	78	68	69	65	65	65	220	110	12	B
SXM40-80N PN6/10	40	250	125	115	216	59	90	80	69	69	65	65	220	110	16	B
SXM40-110N PN6/10	40	250	125	125	258	55	99	86	69	69	65	65	220	110	21	B
SXM50-25N PN6/10	50	280	140	108	200	53	94	68	69	69	70	70	220	110	14	B
SXM50-50N PN6/10	50	280	140	115	224	65	91	77	69	69	70	70	252	126	18	B
SXM50-90N PN6/10	50	280	140	115	222	71	101	87	69	69	70	75	252	126	19	B
SXM65-25N PN6/10	65	340	170	115	235	67	110	89	69	69	80	80	310	155	22	B
SXM65-50N PN6/10 (450W)	65	340	170	115	235	67	110	89	69	69	80	80	310	155	24	B
SXM80-25N PN10 (450W)	80	360	180	115	227	80	116	89	69	69	90	90	330	165	26	B

SCX-DCX - SXM-DXM

ELECTRICAL DATA - SXM - SINGLE-PHASE 50 HZ

Order reference	P2	Capacitor	speed position		Motor P1		current in A 1 phase
	W	μF		rpm	Wmin	Wmax	230V
SXM32-80N	180	8	2	2600	225	410	2.05
			1	2300	170	340	1.75
SXM40-40N PN6/10	180	8	2	2650	250	390	1.93
			1	2200	200	330	1,70
SXM40-80N PN6/10	350	16	2	2800	430	680	3.47
			1	2600	310	610	3.18
SXM40-110N PN6/10	570	25	2	2800	615	945	4.57
			1	2500	415	800	4.20
SXM50-25N PN6/10	180	8	2	2700	280	350	1.67
			1	2050	230	310	1.59
SXM50-50N PN6/10	350	16	2	2800	460	690	3.49
			1	2600	360	630	3.35
SXM50-90N PN6/10	450	25	2	2800	515	820	3.94
			1	2450	360	730	3.72
SXM65-25N PN6/10	350	16	2	2800	510	660	3.39
			1	2500	420	590	3,10
SXM65-50N PN6/10 (450W)	450	25	2	2800	580	790	3.78
			1	2450	440	690	3.51
SXM80-25N PN10 (450W)	450	25	2	2800	640	800	3.85
			1	2350	505	700	3.59

DIMENSIONS - DXM - SINGLE-PHASE 50 HZ

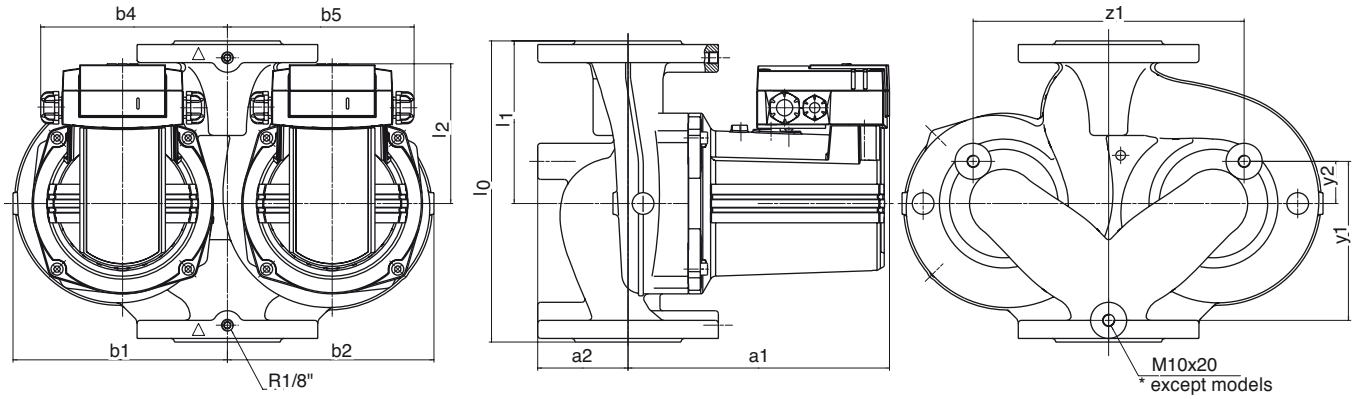

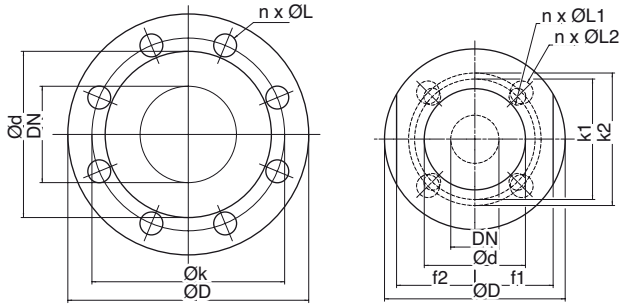

FLANGES PN 10 / 16 EN 1092-2

DN	FLANGES	Ø D	Ø k	Ø d	holes
		mm	mm	mm	n x ØL
80	PN 10	200	160	132	8 x 19

FLANGES PN 6 / 10 COMBIFLANGE

DN	FLANGES	Ø D	Ø k 1	Ø k 2	Ø d	holes	holes
		mm	mm	mm	mm	n x ØL1	n x ØL2
32	PN 6 / 10	140	90	100	76	4 x 14	4 x 19
40	PN 6 / 10	150	100	110	84	4 x 14	4 x 19
50	PN 6 / 10	165	110	125	99	4 x 14	4 x 19
65	PN 6 / 10	185	130	145	118	4 x 14	4 x 19

Order reference	DN	l0	l1	l2	a1	a2	b1	b2	b4	b5	z1	y1	y2	f1	f2	mass approx.
	orifices	mm	mm	mm	mm	mm	mm	mm	mm	mm	mm	mm		mm	mm	kg
DXM32-80N PN6/10*	32	220	110	108	172	60	144	143	146	146	172	107	11	60	60	18
DXM40-40N PN6/10*	40	250	135	108	193	75	150	143	146	146	172	108	11	-	-	20
DXM40-80N PN6/10*	40	250	135	115	216	75	178	172	156	156	225	132	35	-	-	29
DXM40-110N PN6/10	40	250	125	125	258	65	200	195	175	175	225	132	25	65	65	40
DXM50-25N PN6/10*	50	280	155	108	200	83	178	158	156	156	225	132	25	-	-	23
DXM50-50N PN6/10*	50	280	160	115	224	83	79	169	156	156	225	132	30	-	-	31
DXM50-90N PN6/10*	50	280	155	115	222	83	198	192	166	166	228	157	50	-	-	33
DXM65-25N PN6/10	65	340	170	115	235	81	214	201	175	175	225	180	25	80	80	37
DXM65-50N PN6/10 (450W)	65	340	170	115	235	81	214	201	175	175	225	180	25	80	80	40
DXM80-25N PN10 (450W)	80	360	180	115	227	88	226	210	184	184	280	198	33	90	90	46

* For these models, drilling on demand.

ELECTRICAL DATA - DXM - SINGLE-PHASE 50 HZ

Order reference	P2	Capacitor	speed position	Motor P1		current in A 1 phase
	W	µF		rpm	Wmin	Wmax	230V
DXM32-80N PN6/10	180	8	2	2600	260	410	2.05
			1	2300	185	340	1.75
DXM40-40N PN6/10	180	8	2	2650	250	390	1.93
			1	2200	200	330	1.7
DXM40-80N PN6/10	350	16	2	2800	430	680	3.47
			1	2600	310	610	3.18
DXM40-110N PN6/10	570	25	2	2800	615	945	4.57
			1	2500	415	800	4.20
DXM50-25N PN6/10	180	8	2	2700	295	350	1.67
			1	2050	255	310	1.59
DXM50-50N PN6/10	350	16	2	2800	460	690	3.49
			1	2600	360	630	3.35
DXM50-90N PN6/10	450	25	2	2800	515	820	3.94
			1	2450	360	730	3.72
DXM65-25N PN6/10	350	16	2	2800	510	660	3.39
			1	2500	420	590	3.1
DXM65-50N PN6/10 (450W)	450	25	2	2800	580	790	3.78
			1	2450	440	690	3.51
DXM80-25N PN10 (450W)	450	25	2	2800	640	800	3.85
			1	2350	505	700	3.59

SCX-DCX - SXM-DXM

PRESSURE GAUGE KIT

• Differential pressure gauge kit



• For single and twin-head pumps
• Rapid connection without welding, to ports provided on flanges.

KIT includes:
- 0-6 or 0-16 bar glycerin bath pressure gauge,
- isolating cocks,
- unions and connecting tubes,
- bleed.

Supplied in pouch with installation instructions.

Order ref.: PRESS KIT 6 or
PRESS KIT 16

BLANK COVER

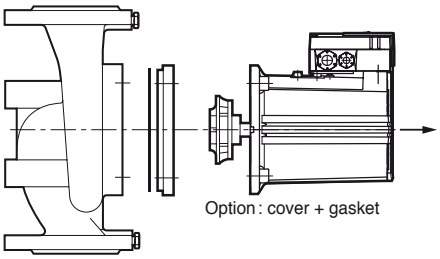

Blank cover with gasket for twin-head pumps

type of twin-head circulator		Order reference
DCX 32-80 N	DXM 32-80 N	
DCX 40-40 N	DXM 40-40 N	COUV. 32
DCX 50-25 N	DXM 50-25 N	
DCX 40-80 N	DXM 40-80 N	
DCX 50-50 N	DXM 50-50 N	
DCX 50-90 N	DXM 50-90 N	
DCX 65-25 N	DXM 65-25 N	COUV. 42
DCX 65-50 N	DXM 65-50 N	
DCX 80-25 N	DXM 80-25 N	
DCX 40-110 N	DXM 40-110 N	
DCX 50-110 N		
DCX 65-90 N		COUV. 52
DCX 65-110 N		
DCX 80-50 N		
DCX 80-110 N		COUV. 72
DCX 80-150 N		

PARTICULARITES

a) Electrical data
- Single-phase 230 V - 50 Hz with built-in capacitor.
- Three-phase 400 V or 230* V (50 Hz)

*** For 3~230V,** use a speed selector (réf. 2040641) sold as an accessory.

- 1 Speed selector for SCX
- 2 Speed selectors for DCX

b) Installation
- Direct on piping, motor shaft always horizontal.
- Connection to the installation by welded, round counter-flanges (not included).

c) Packaging
- Supplied with gaskets and bolts without counter-flanges.

d) Maintenance
- Standard exchange of the circulator.

OPTIONS & ACCESSORIES

• Motor protection circuit-breaker (SCX).
• Motor control and protection box (DCX).
• Speed controller box.
• Blank off cover (DCX).
• Pressure gauge kit.
• Welded round counter-flanges, unions.
• Isolating valves.
• Anti-vibration sleeves, etc.
• speed selector 3~230 V

OPERATING LIMITS

Flows rates up to:	**60 m³/h***
Heads up to:	**17 m CE**
Max. operating pressure:	**10 bar**
Temperature range:	**-10° to +110°C**
Max. ambient temperature:	**+40°C**
ND of ports:	**25 to 80**
EEI:	**≤0,27**

*108 m³/h: simultaneous operation

The benchmark for most efficient circulators is EEI ≤ 0,20

SIRIUX MASTER

SINGLE AND DOUBLE HIGH EFFICIENCY CIRCULATORS PREMIUM RANGE

Heating - Air-conditioning

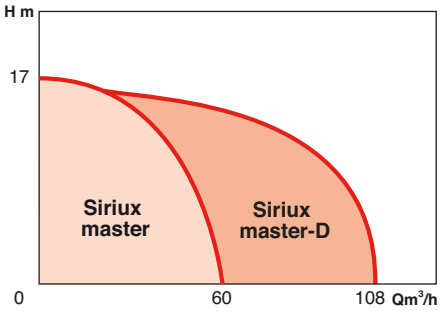

APPLICATIONS

For accelerated water circulation for heating or cooling, with optimization of circulator operating point.

- Central heating,
- Urban heating,
- Commercial or industrial installations;
- Cooling circuits.
- Air-conditioning systems
- New, old (renovated) installations or extensions.

Circulating pumps recommended for facilities fitted with thermostatic valves.

ADVANTAGES

- **Energy savings**
- **All-purpose**
- **Noise reduction**
- **Reliability**
- **Ergonomics**

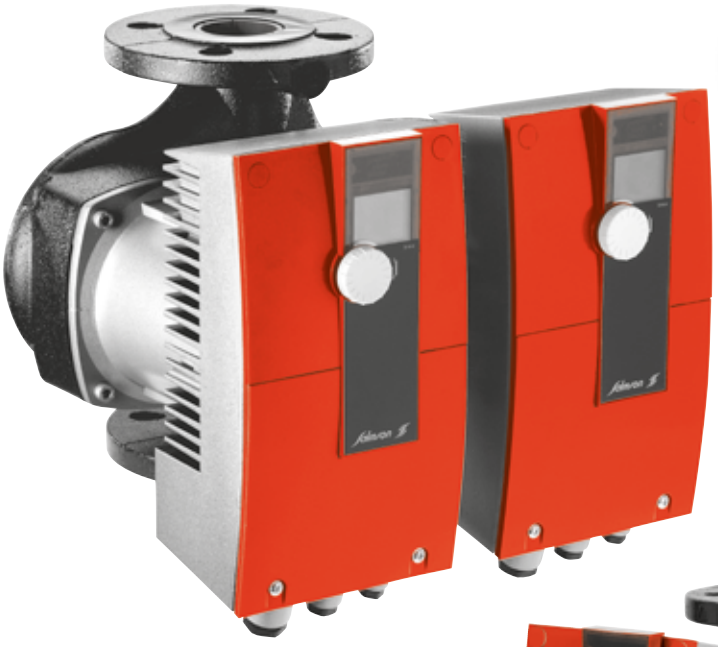

- SIRIUX D-32-70



- SIRIUX-50-60

SIRIUX MASTER

DESIGN

• Hydraulic part

Single or double body with threaded or flanged. 3D impellers and spiral for maximum optimization of the hydraulic performances.
An impeller seal between the pump body and the impeller improves performances further by limiting the internal recycling of the fluid.
The pump body is fully cataphoresis coated to ensure corrosion resistance.

• Motor

230 V – 50 - 60 Hz single-phase
Wet rotor motor; bearing bushes lubricated by the fluid pumped.
E.C.M. (Electronically Commutated Motor) synchronous motor, equipped with a permanent magnet rotor.
The stator's rotating magnetic field is generated by the electronic switching of the coils.
This rotating field creates a continuous torque through attraction between the rotor's opposite magnetic poles, controlling its position (synchronous motor). This ensures the optimum performance of the motor, whatever its speed.
The wet rotor and the windings are separated by a composite, and therefore completely amagnetic, sleeve, to reduce motor losses.

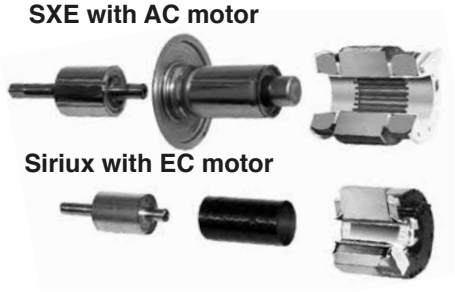

Speed:	900 to 4800 rpm
Mains voltage:	1-ph. 230 V ± 10 %
Frequency:	50 Hz - 60 Hz
Insulation class:	F (155° C)
Protection index:	IPX4D
EMC compliance:	EN 61800-3
	emission EN 61000-6-3
	immunity EN 61000-6-2

•Protection differential (FI)

«All current» FI protection differentials compliant with EN 61008-1 are permitted. These differential circuit breakers are identified by ⎍ or ⎍ ⎓.

ADVANTAGES

• Energy savings

High efficiency circulators, with optimization of the operating point. Energy savings of up to 80% compared to a traditional circulator.

• All-purpose

These circulators are compatible with all types of heating, air-conditioning and refrigeration systems. The standard version covers a fluid temperature range from –10°C to +110°C.

• Noise control

Eliminating of whistling and hydraulic noises in the thermostatic valves. Automatic adapting of speeds to the system's needs.

• Reliability

- Fully automatic operation requiring neither venting nor servicing. A double filter system prevents solid particles from getting into the rotor chamber. A rotating seal between the impeller and the endshield limits water exchanges with the motor to the bare minimum.

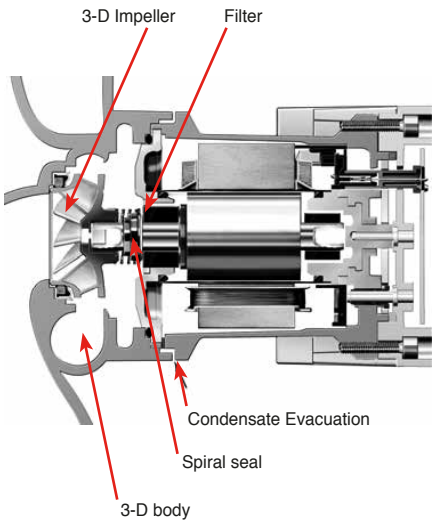

- Circulators shut down via the on/off control start up for a few moments once a day to prevent blocking due to a long period of inactivity.

- The electronic modules have a non-volatile memory for data storage. The setpoints are protected in the case of a power cut.

- Single or double circulators equipped with IF modules (optional, one IF module per motor) allow many control or remote monitoring functions.

• Ergonomics

Easy electrical connections and adjustments facilitated by direct access via the control module's front panel. The position of the display on the LCD screen may be adjusted according to the position of the control module.
Pressure gauge tappings on the flanges.

STANDARD CONSTRUCTION

Main parts	Material
Pump casing	EN GJL 250
	EN GJL 200 for ND 25-30
Impeller	Glass fibre reinforced PPS
	PP for ND 65-80
Shaft	Chromium steel (X46 – Cr13)
Bearing bushes	Metal impregnated carbon

IDENTIFICATION

SIRIUX 32 - 70
SIRIUX - D

High efficiency circulator

Single pump or D : double pump

Nominal diameter (ND) of suct/dis. flanges

Head (in dm) at nominal flow

CONNECTIONS

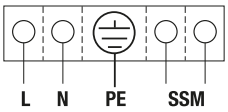

Options: IF Modules

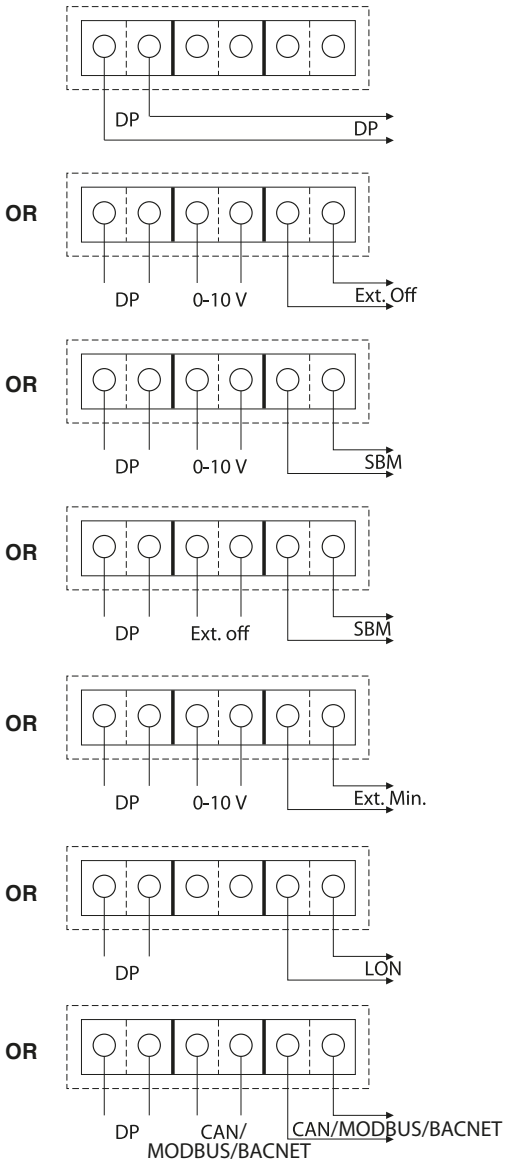

POSSIBLE ASSEMBLY

On vertical or horizontal pipes the motor shaft must always be horizontal.

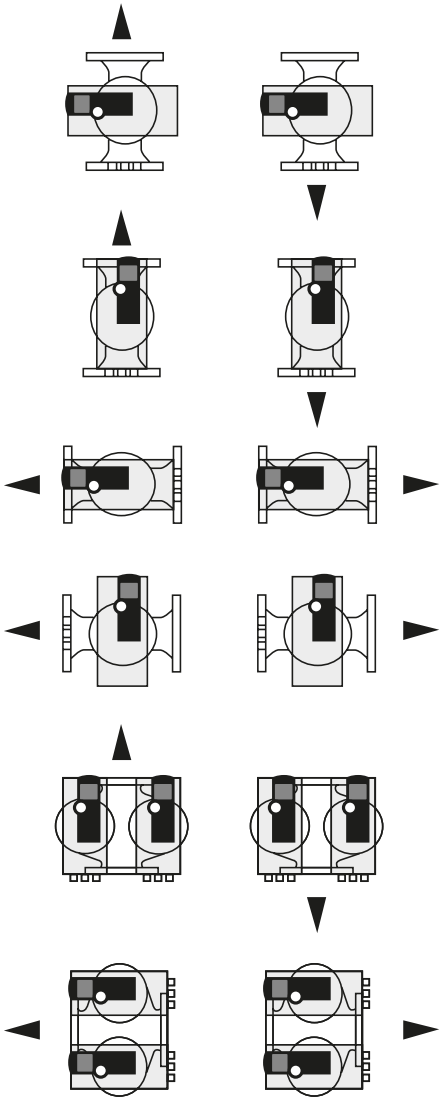

• In terminal boxes

L – N: mains connection, 230 V – 50 Hz/60 Hz single-phase current

PE: earth

SSM: dry contact for fault indicator (normal closed, open by default). Max load: 1 A – 250 V – AC

• On IF modules (optional)

DP: double pump (or 2 single pump) management

0-10 V: analog input for external control signal

Ext. Off: remote on/off (through external contact)

SBM: dry contact for operating state indicator (contact normally open; closed if pump runs)

Ext. Min: remote min. operating curve (through external contact)

LON : Serial digital LON interface for connection to LONWORKS networks.

CAN : Serial digital interface for connection to CAN open networks

MODBUS: Serial digital interface for connection to Modbus open networks

BACnet : Serial digital interface for connection to BACnet open networks

SIRIUX MASTER

OPERATING PRINCIPLE

The heating or air-conditioning needs of a building vary according to whether it is day or night, but also during the day according to changes in the outside temperature, etc., and even from one point of the building to another as the thermostatic valves or 2-way valves are closed. The self-regulated circulator automatically adjusts its rotation speed according to the mains network's friction losses, in order to maintain a minimum electricity consumption (ECM technology) and a low operating noise level. The circulator's properties are adjusted automatically according to the heating or cooling needs of the system.

• Manual adjustment
Parameterization of basic functions, i.e.:
- ON/OFF;
- control mode ΔP constant ΔP variable
- and speed adjustment;

• Constant pressure
With this regulation mode, electronic control maintains the constant differential pressure of the circulating pump whatever the flow rate, depending on the predefined pressure value.

• Variable pressure
With this regulation mode, the electronic control allows reducing the differential pressure (manometric head) in case of flow reduction, depending on the predefined differential pressure value.

• Speed adjustment
The speed may be adjusted manually to a constant figure between 900 and 4800 rpm (according to models).

• Automatic idling
The considerable development of day/night adjustment installations has produced hourly or thermostatic regulated boilers, but not by the adjustment of circulating pumps, which consume energy accelerating cold water circulation.

• Remote monitoring
In addition, a dry contact (open by default) allows the remote monitoring of any operating incident (e.g. through a building management system).

• External control (with IF module)
This control mode deactivates controlling by the control module.
It provides the following functions by means of a 0-10 V analog signal:
- remote adjusting of the setpoint ΔP – constant
- remote adjusting of the setpoint ΔP – variable
- remote adjusting of the speed between the min speed and the max speed
- external on-off.

• LON communication

• CAN communication

• Modbus communication

• BACnet communication

• Double circulators
Equipped with two IF (InterFace) units, the Siriux benefits from the following extra functions:

Duty/Stand-by
The flow requested is provided by a single pump, the other pump starting up in case of fault on first pump or after 24 hours of actual operation of the latter.

Cascade operation
At minimum load, only the pump in service operates. The backup pump triggers when radiators request a higher flow rate. From this point (switchover point), the nominal speed of the two pumps increases synchronously in case of need. After 24 hours of actual operation, there is built-in (automatic) changeover of the master pump which becomes slave. This function increases energy saving as compared to usual operation in parallel by avoiding numerous locking/ triggering.
(See working curves in cascade opposite).

• Additional functions (IF modules)
There are nine types of IF module:
- IF module – Ext. Off
- IF module – SBM
- IF module – Ext. Off / SBM
- IF module – Ext. Min.
- IF module – DP.
- IF module – LON.
- IF module – CAN.
- IF module – Modbus.
- IF module – BACnet.

having the following functions (see table below):

Modules	DP	Ext. Off	SBM	Ext. Min	LON	Ext. Off / SBM	CAN	Modbus	BACnet
Functions									
Double pump management	•	•	•	•	•	•	•	•	•
0-10 V analog input		•	•	•					
Remote on/off		•				•			
Operation indicator			•			•			
Remote min. operation				•					
LONWORKS Serial Interface					•				
CAN Serial Interface							•		
Modbus Serial Interface								•	
BACnet Serial Interface									•

OPERATING PRINCIPLE

ΔP Constant Mode

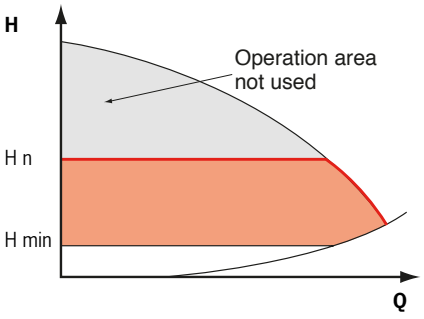

Electronic module maintains constant the differential pressure produced by the pump at the differential pressure value of Hn instruction, up to the curve of operating data through the authorized flow rating.

ΔP Variable Mode

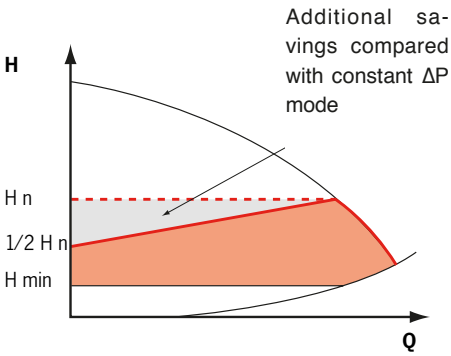

Electronic module modifies linearly the differential pressure value between Hn and 1/2 Hn instruction to be met by the pump. Differential pressure value of H instruction increases or decreases acc. to the requested flow rate.

Auto operating mode (setback function)

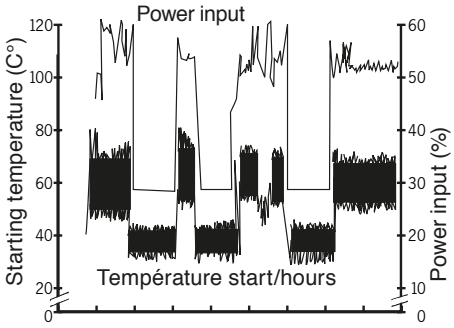

This device enables making up to 25% additional saving as compared to operation in ΔP constant.
When the heating facility reaches a certain low temperature, the circulator runs on a constant reduced speed until a new rise in temperature.

Efficiency-optimized peak-load operation

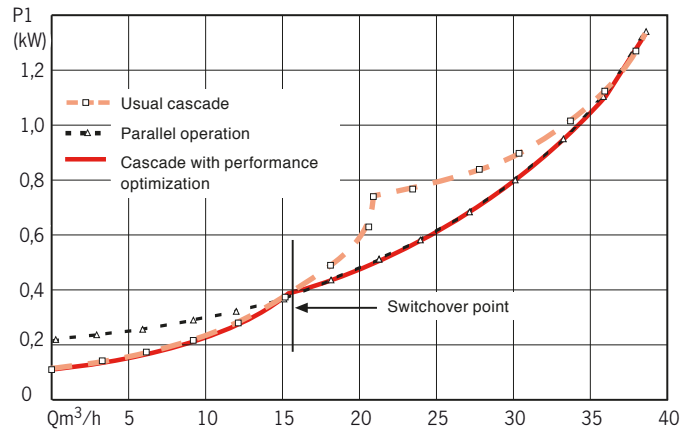

Operation in cascade of a SIRIUX fitted with two IF modules.
At equivalent flow rate, the circulator automatically uses the curve of least power.

CONTROLS

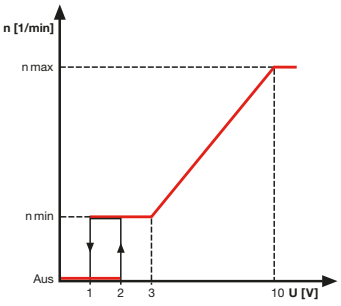

Remote controlling of the speed by a 0-10 V signal

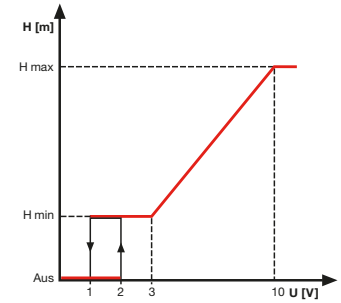

Remote controlling of the differential head by a 0-10 V signal

SIRIUX MASTER

TABLE OF FUNCTIONS

	Siriux	Siriux D
Operating modes		
Speed-stage switching	–	–
Remote speed control (n = constant)	•	•
Δp-c for constant differential pressure	•	•
Δp-v for variable differential pressure	•	•
Manual functions		
Adjustment of operating mode	•	•
Adjustment of differential-pressure setpoint	•	•
Adjustment of «autopilot» (automatic setback mode)	•	•
Selection Pump ON/OFF	•	•
Adjustment of speed (manual setting mode)	•	•
Adjustment of speed stages	–	–
Automatic functions		
Smooth adjustment of power depending on the operating mode	•	•
«Autopilot» automatic setback mode	•	•
Deblocking function	•	•
Soft start	•	•
Full motor protection with integrated trip electronics	•	•
External control functions [1)]		
Control input «Overriding Off»	Possible with Siriux interface modules (accessory)	Possible with Siriux interface modules (accessory)
Control input «Overriding Min»	Possible with Siriux interface modules (accessory)	Possible with Siriux interface modules (accessory)
Control input „Analog In 0 ... 10 V“ (remote speed setting)	Possible with Siriux interface modules (accessory)	Possible with Siriux interface modules (accessory)
Control input „Analog In 0 ... 10 V“ (remote setpoint setting)	Possible with Siriux interface modules (accessory)	Possible with Siriux interface modules (accessory)
Signal and display functions		
Collective fault signal (potential free NC contact)	•	•
Individual run signal (potential free NO contact)	Possible with Siriux interface modules (accessory)	Possible with Siriux interface modules (accessory)
Fault light	•	•
LC display for showing pump data and fault codes	•	•

TABLE OF FUNCTIONS

	Siriux	Siriux D
Data exchange		
Infrared interface for wireless data exchange with Salmson Pump Control (see Salmson Pump Control function table)	•	•
Serial digital LON interface for connection to a LONWORKS network	Possible with Siriux interface modules (accessory)	Possible with Siriux interface modules (accessory)
Serial digital interface for connection to a CAN open, Modbus, BACnet networks	Possible with Siriux interface modules (accessory)	Possible with Siriux interface modules (accessory)
Dual pump management (double pumps or 2 x single pump) [2]		
Main/standby pump operation (automatic faultactuated duty changeover/ time-sensitive pump alteration)	Possible with Siriux interface modules (accessory)	Various combinations with Siriux interface modules (accessory) possible
Cascade mode (switched on and off for peak loads to optimise efficiency)	Possible with Siriux interface modules (accessory)	Various combinations with Siriux interface modules (accessory) possible
Equipment / scope of delivery		
Wrench attachment point on pump body	Threaded types with P2 < 140 W	—
Double changeover valve in pump housing	—	•
Cable entry possible on both sides	—	—
Integrated air separator for automatic rapid ventilation Rp 3/8	—	—
Plug-in slot for optional extension with SALMSON IF modules	•	•
Blocking-current-proof motor	—	—
Included seals for threaded connection or flanges (loose)	•	—
Included installation and operating instructions	•	•
Included heat insulation	—	—
Included bolts and washers for flanges (for DN 32 - DN 80 nominal connection diameters)	•	•
Particle filter	•	•

• = available ; — = not available
1) Choose the appropriate IF module
2) With 2 IF modules

SIRIUX MASTER

TECHNICAL DATA - SIRIUX

	25-30	25-40	25-60	25-65	32-30	32-40	32-60	32-65	32-65F	32-90	32-70	40-30	40-60	40-65	40-80	40-110	50-60	50-65	50-70	50-80	50-110	65-80	65-90	65-110	80-90
Approved fluids (other fluids on request)																									
Heating water (as per VDI 2035)													•												
Water/glycol-mixtures (max. 1:1; mixtures with more than 20 % glycol content require rechecking of the pumping data)													•												
Drinking water and water for food businesses in accordance with TrinkwV 2001													—												
Performance																									
Max. delivery head [m]	4	6	7	10	4	8	7	10	10	11	9	5	8	10	12	17	8	10	9	11	17	10	11	16	13
Flow rate max. [m3/h]	4	7	8	9	4	7	8	9	9	10	13	11	13	9	21	23	13	9	24	29	43	29	41	52	61
Permitted field of application																									
Temperature range when used in heating, ventilation & air conditioning systems - at max. ambient temperature +40 °C [°C]													-10 to +110												
Temperature range for use in drinking-water circulation systems																									
- at max. ambient temperature +40 °C [°C]													—												
- at max. ambient temperature +40 °C in short-term operation 2 h [°C]													—												
Max. permissible total hardness in drinking watercirculation systems [°d]													—												
Standard version with nominal pressure, p max [bar]													6/10												10
Special version with nominal pressure, p max [bar]													16												16
Pipe connections																									
Pipe connection	1	1	1	1	11/4	11/4	11/4	11/4		11/4															
Nominal diameter									32		32	40	40	40	40	40	50	50	50	50	50	65	65	65	80
Flange for mating flange PN 10, standard version	—	—	—	—	—	—	—	—	—	—	—	—	—	—	—	—	—	—	—	—	—	—	—	—	•
Flange for mating flange PN 16, special version	—	—	—	—	—	—	—	—	•	—	•	•	•	•	•	•	•	•	•	•	•	•	•	•	•
Combination flange PN 6/10 for mating flanges PN 6 and PN 16, standard version	—	—	—	—	—	—	—	—	•	—	•	•	•	•	•	•	•	•	•	•	•	•	•	•	—
Support-bracket mounting (with horizontal shaft only), standard version	—	—	—	—	—	—	—	—	—	—	—	—	—	—	—	—	—	—	—	—	—	—	—	—	—
Support-bracket mounting (with horizontal shaft only), special version	—	—	—	—	—	—	—	—	—	—	—	—	—	—	—	—	—	—	—	—	—	—	—	—	—

TECHNICAL DATA - SIRIUX

	25-30	25-40	25-60	25-65	32-30	32-40	32-60	32-65	32-65F	32-90	32-70	40-30	40-60	40-65	40-80	40-110	50-60	50-65	50-70	50-80	50-110	65-80	65-90	65-110	80-90
Electrical connection																									
Mains supply connection 1~ [V], standard version													230												
Mains suppply connection 3 ~ [V], standard version													230												
Mains supply connection 3 ~ [V], with optional switching plug													—												
Mains frequency [Hz]													50/60												
Motor/electronics																									
Electromagnetic compatibility													EN 61800-3												
Emitted interference													EN 61000-6-3												
Immunity to interference													EN 61000-6-2												
Power electronics													Frequency converter												
Protection class													IPX4D												
Insulation class													F												

• = available ; — = not available

SIRIUX MASTER

TECHNICAL DATA - SIRIUX D

	32-60	32-70	40-60	40-80	40-110	50-60	50-70	50-80	50-110	65-90	65-110	80-90
Approved fluids (other fluids on request)												
Heating water (as per VDI 2035)							•					
Water/glycol-mixtures (max. 1:1; mixtures with more than 20 % glycol content require rechecking of the pumping data)							•					
Drinking water and water for food businesses in accordance with TrinkwV 2001							—					
Performance												
Max. delivery head [m]	7	9	8	12	17	8	9	11	17	11	17	13
Flow rate max. [m3/h]	13	19	21	32	35	21	38	43	58	72	80	107
Permitted field of application												
Temperature range when used in heating, ventilation & air conditioning systems - at max. ambient temperature +40 °C [°C]							-10 to +110					
Temperature range for use in drinking-water circulation systems												
- at max. ambient temperature +40 °C [°C]							—					
- at max. ambient temperature +40 °C in short-term operation 2 h [°C]							—					
Max. permissible total hardness in drinking watercirculation systems [°d]							—					
Standard version with nominal pressure, p max [bar]						6/10						10
Special version with nominal pressure, p max [bar]						16						16
Pipe connections												
Pipe connection												
Nominal diameter	32	32	40	40	40	50	50	50	50	65	65	80
Flange for mating flange PN 6, standard version	—	—	—	—	—	—	—	—	—	—	—	•
Flange for mating flange PN 16, special version	•	•	•	•	•	•	•	•	•	•	•	•
Combination flange PN 6/10 for mating flanges PN 6 and PN 16, standard version	•	•	•	•	•	•	•	•	•	•	•	—
Electrical connection												
Mains supply connection 1 ~ [V], standard version							230					
Mains suppply connection 3 ~ [V], standard version							230					
Mains supply connection 3 ~ [V], with optional switching plug							—					
Mains frequency [Hz]							50/60					
Motor/electronics												
Electromagnetic compatibility							EN 61800-3					
Emitted interference							EN 61000-6-3					
Immunity to interference							EN 61000-6-2					
Power electronics							Frequency converter					
Protection class							IPX4D					
Insulation class							F					

• = available ; — = not available

SIRIUX 25-30 32-30 AND SIRIUX 25-40 32-40 HYDRAULIC PERFORMANCES

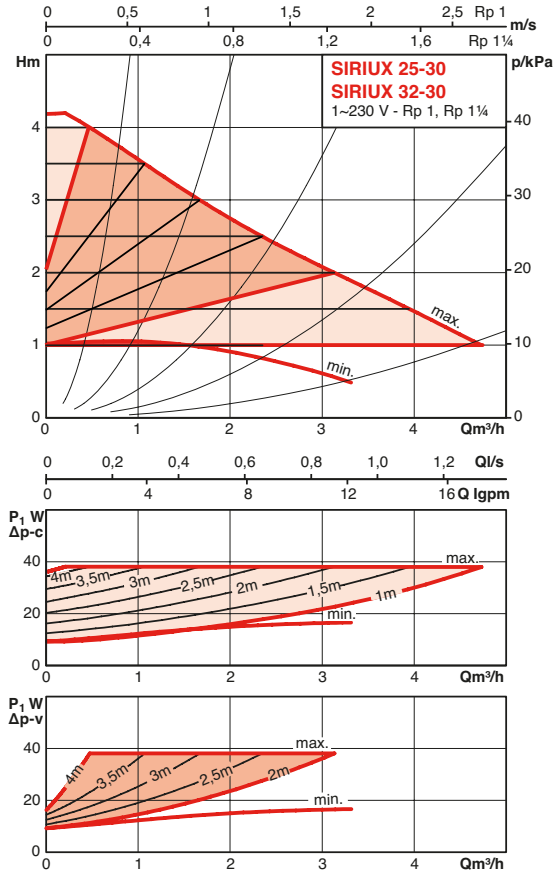

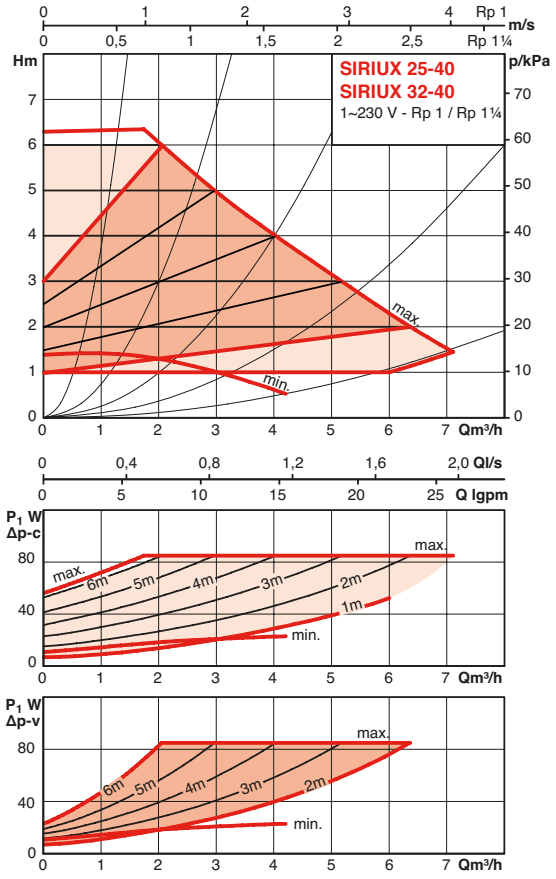

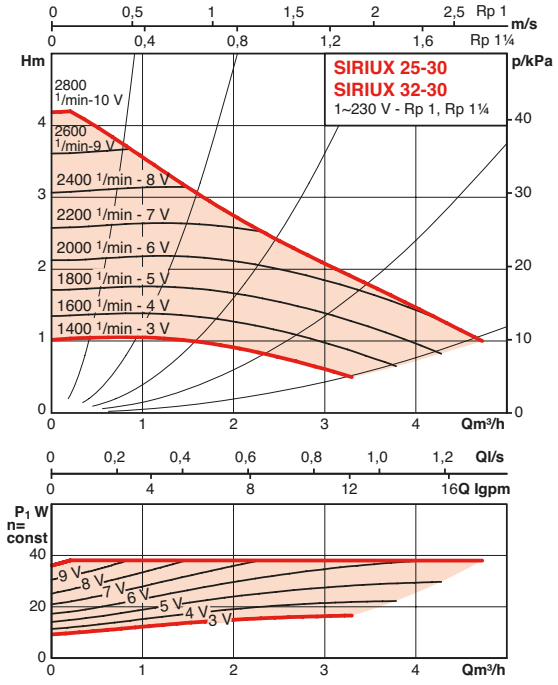

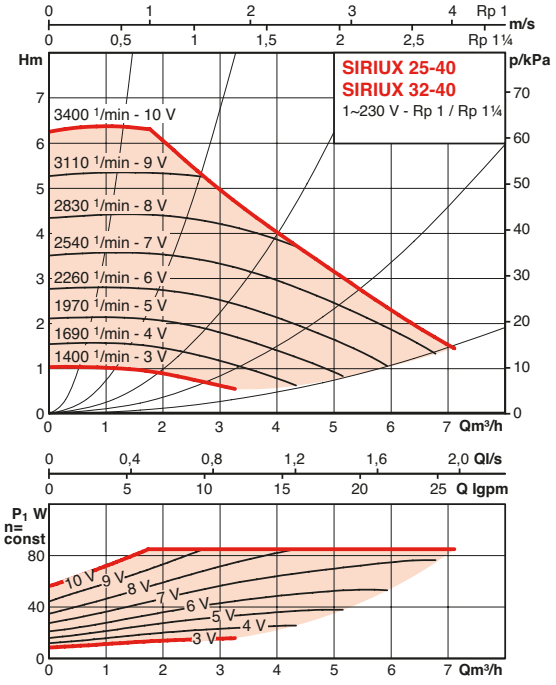

SIRIUX MASTER

SIRIUX 25-60 32-60 AND SIRIUX 25-65 32-65 HYDRAULIC PERFORMANCES

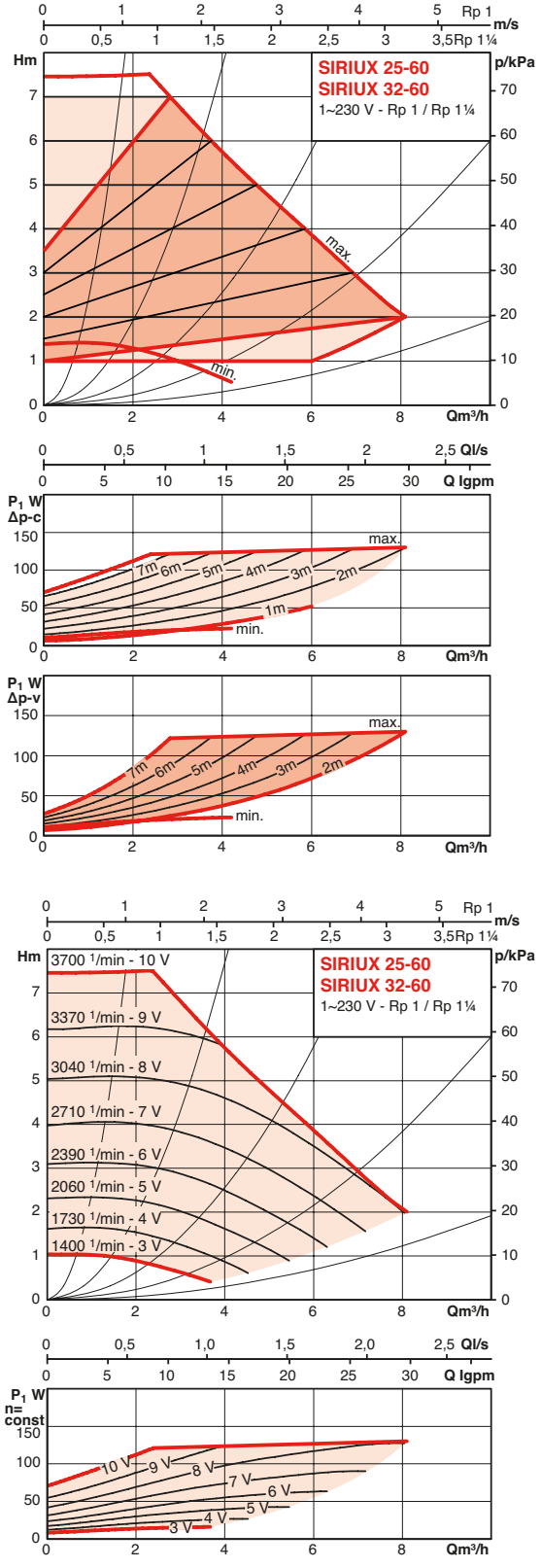

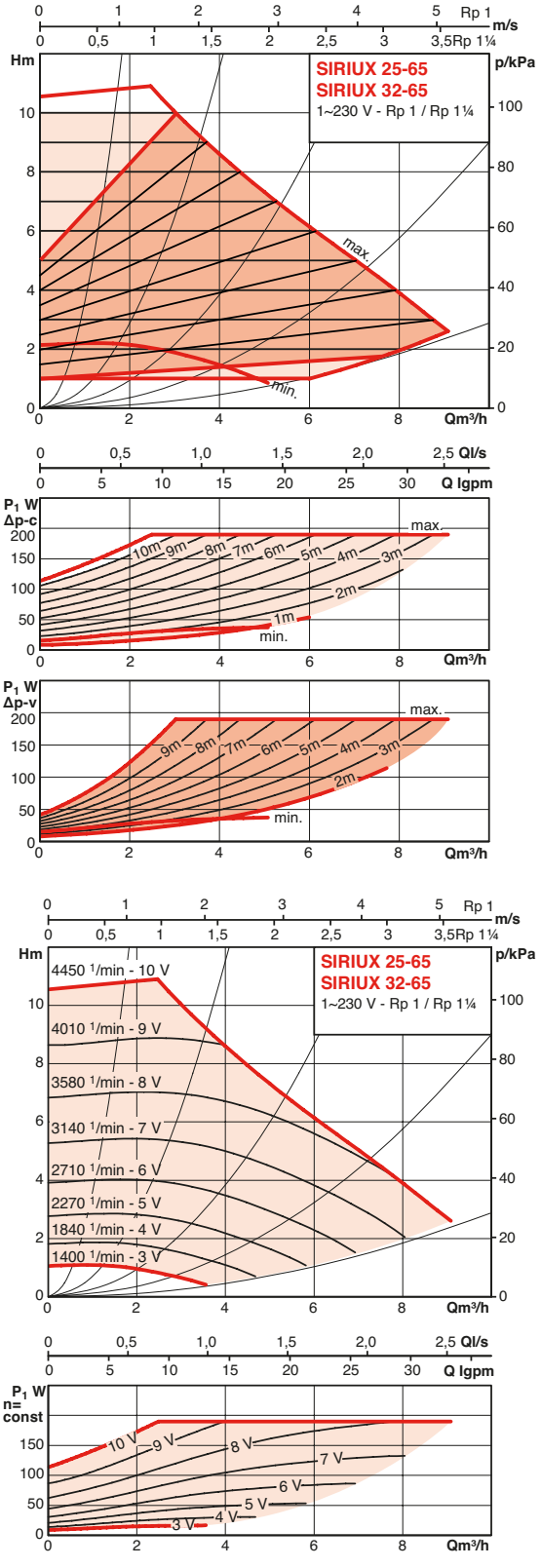

SIRIUX 32-65F AND SIRIUX 32-70 HYDRAULIC PERFORMANCES

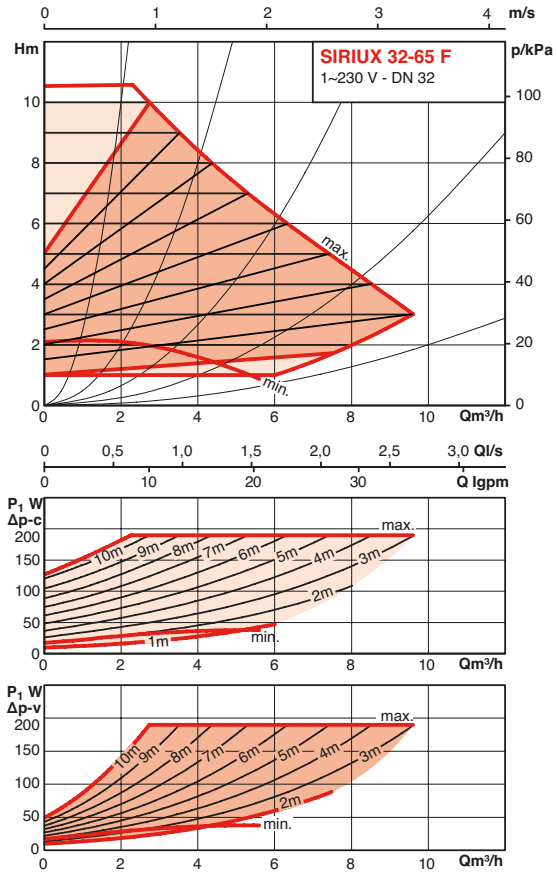

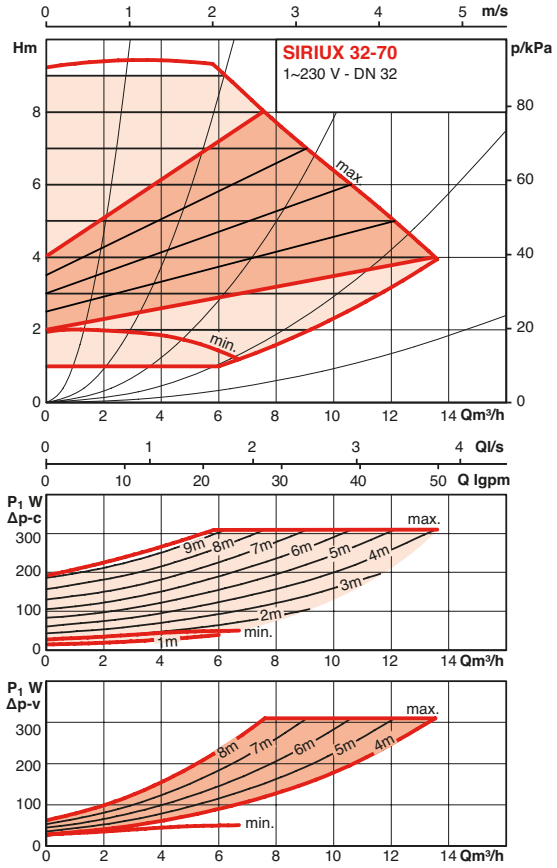

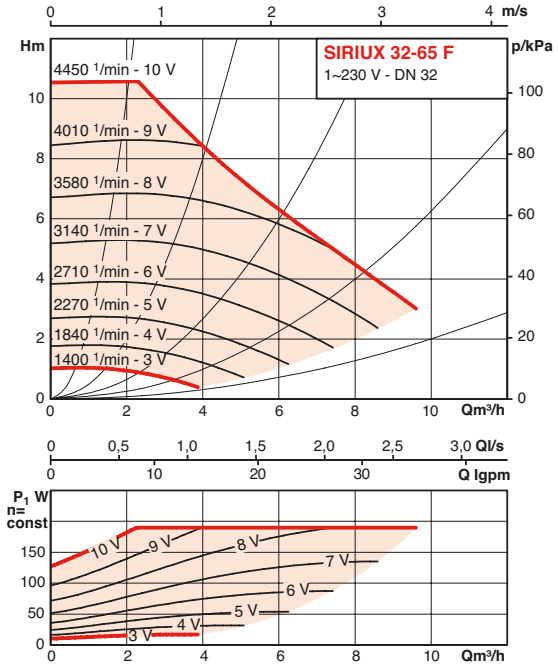

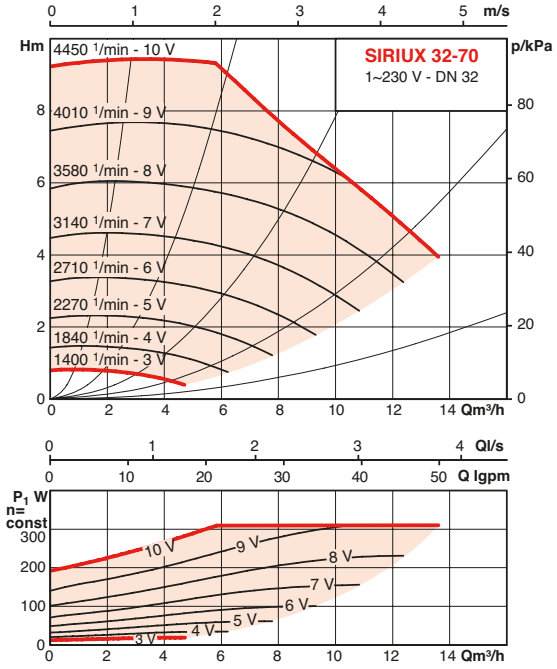

SIRIUX MASTER

SIRIUX 32-90 AND SIRIUX 40-30 HYDRAULIC PERFORMANCES

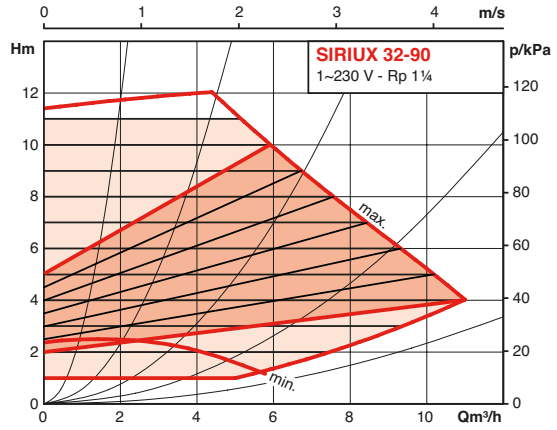

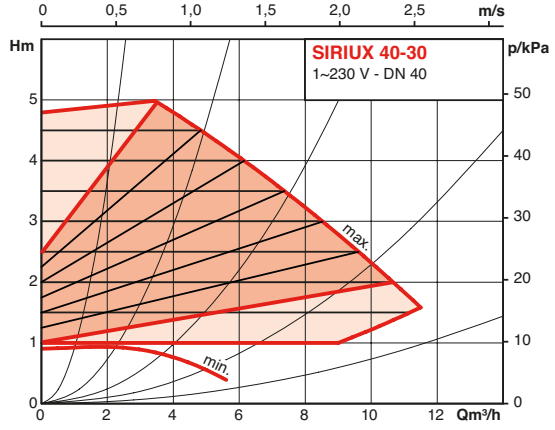

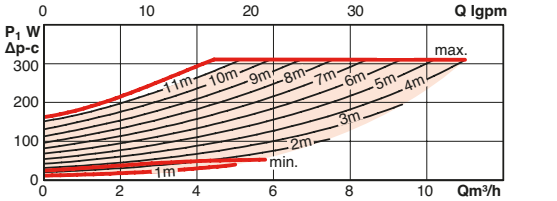

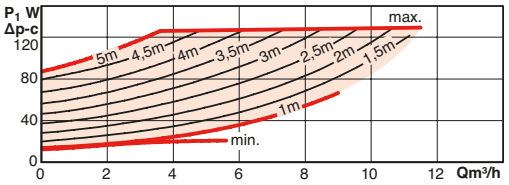

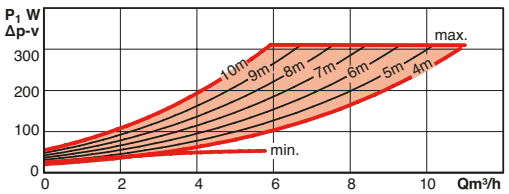

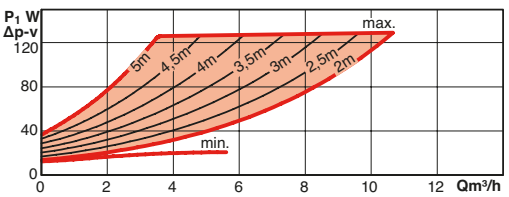

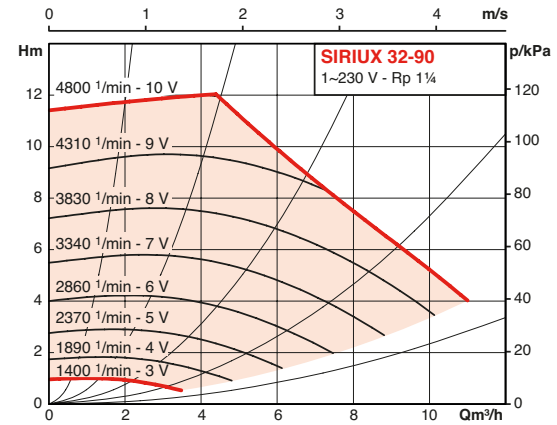

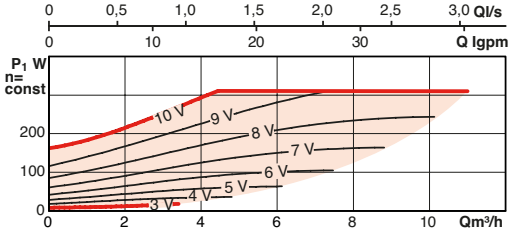

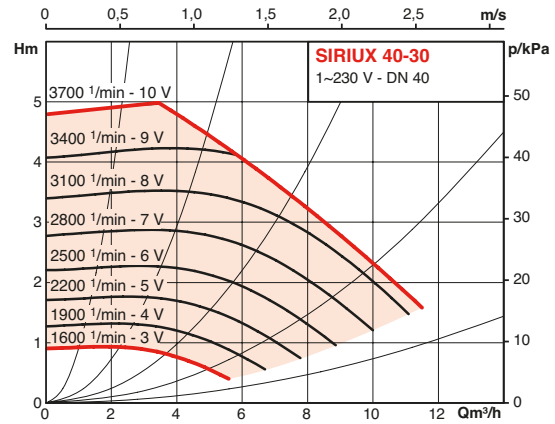

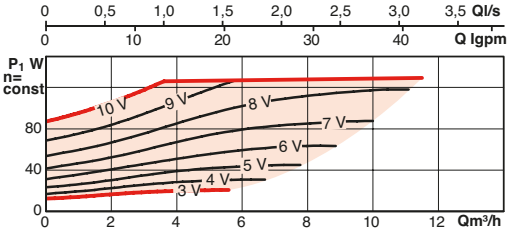

SIRIUX 40-60 AND SIRIUX 40-65 HYDRAULIC PERFORMANCES

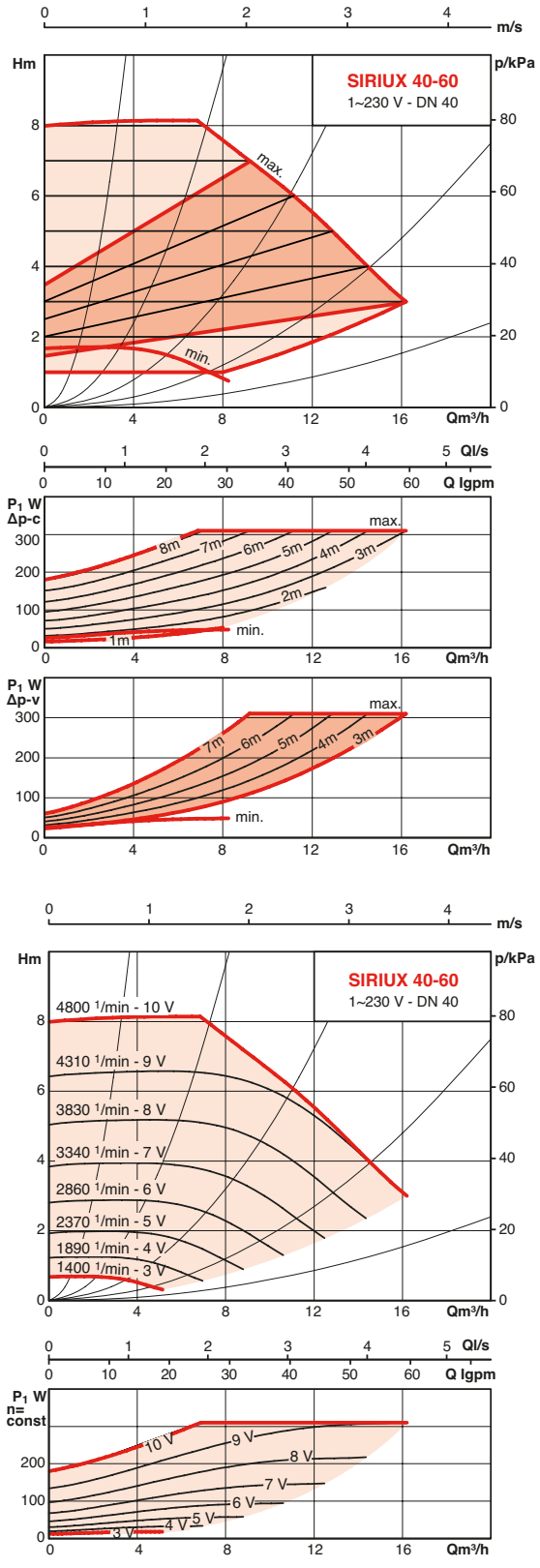

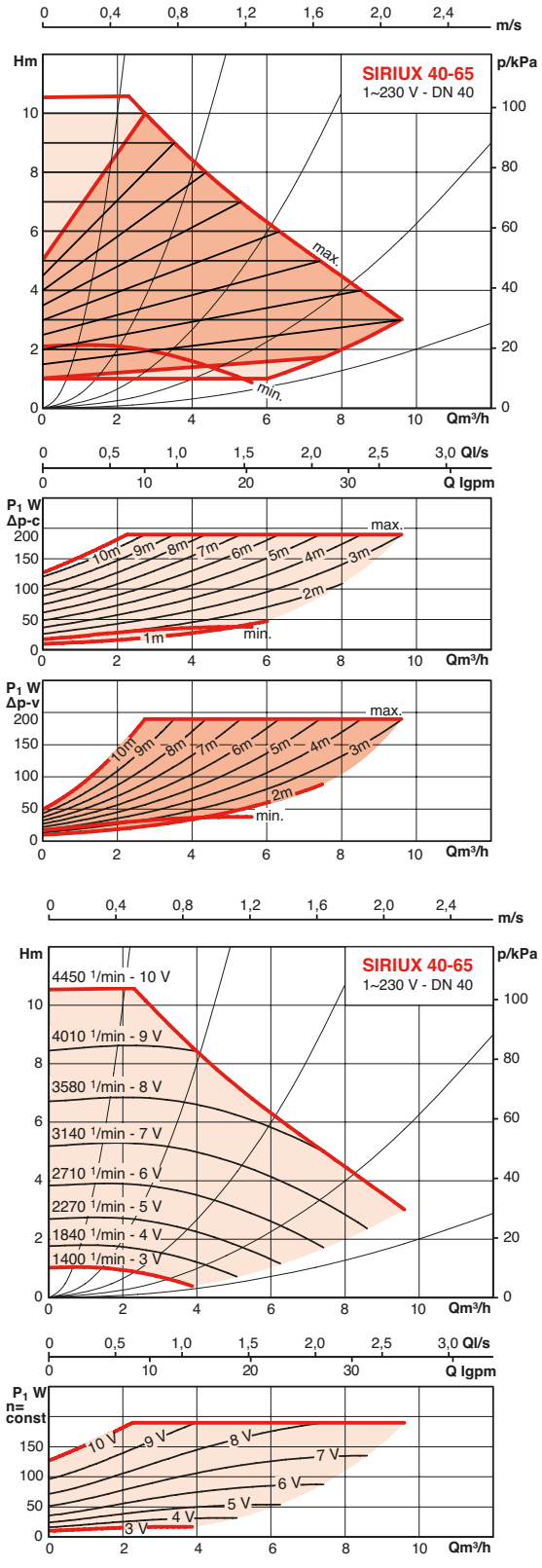

SIRIUX MASTER

SIRIUX 40-80 AND SIRIUX 40-110 HYDRAULIC PERFORMANCES

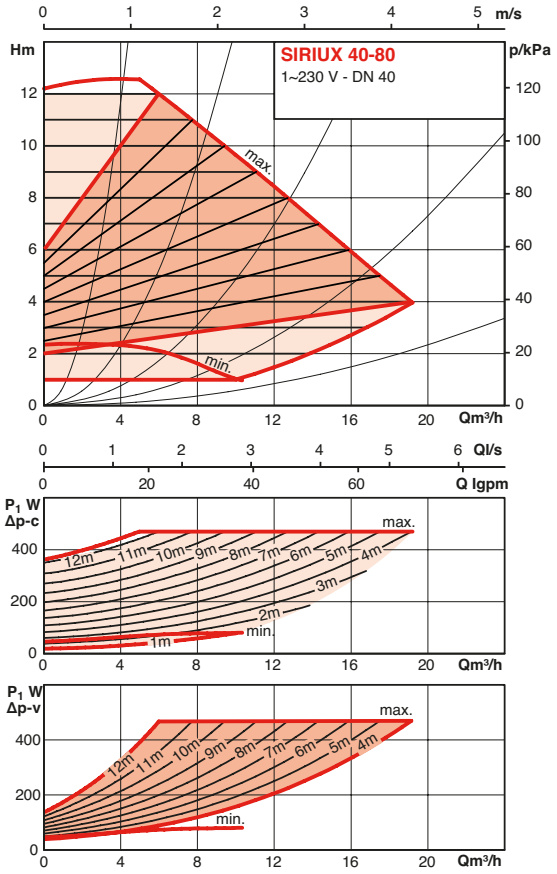

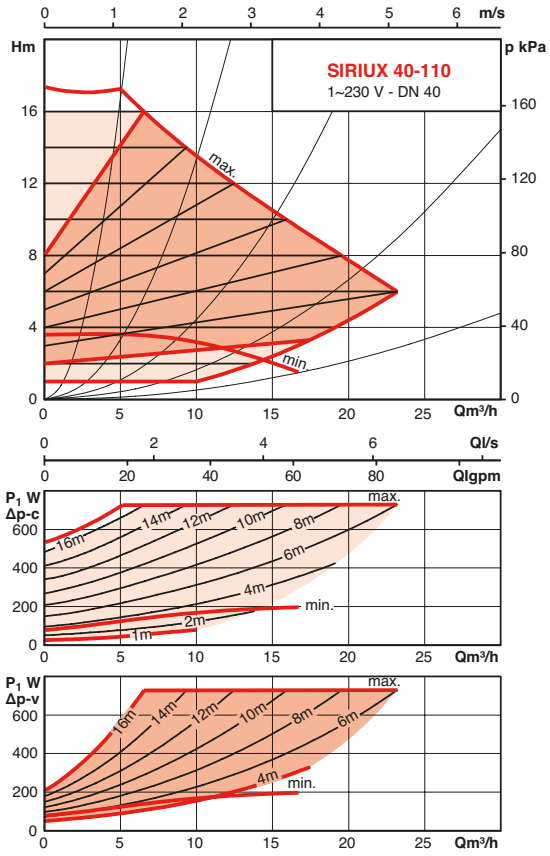

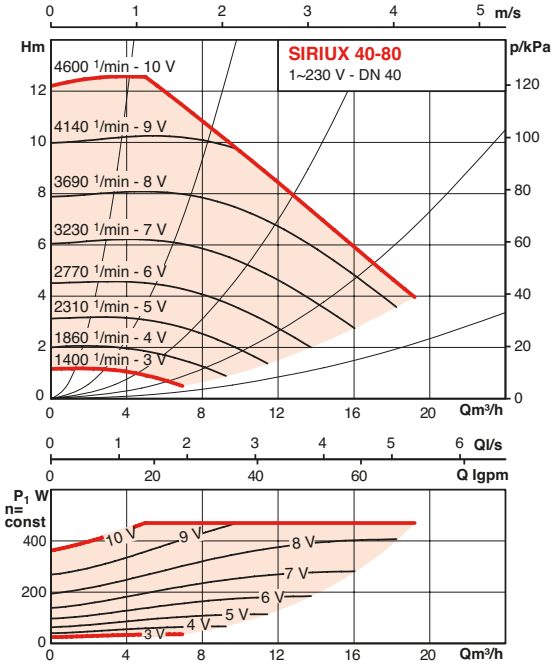

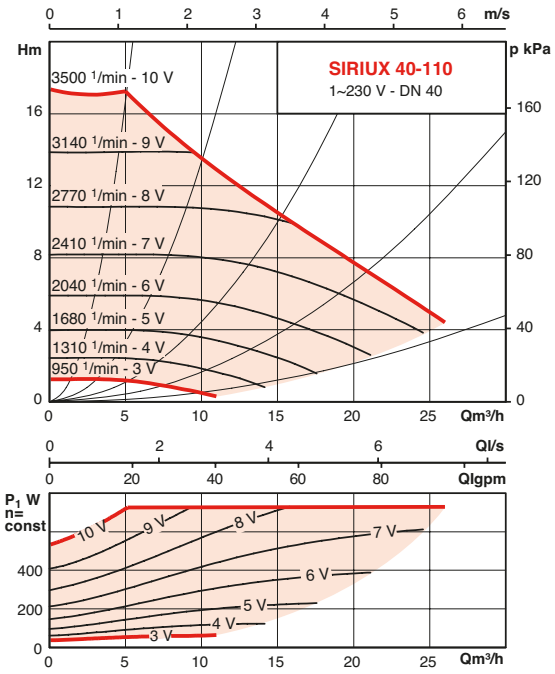

SIRIUX 50-60 AND SIRIUX 50-65 HYDRAULIC PERFORMANCES

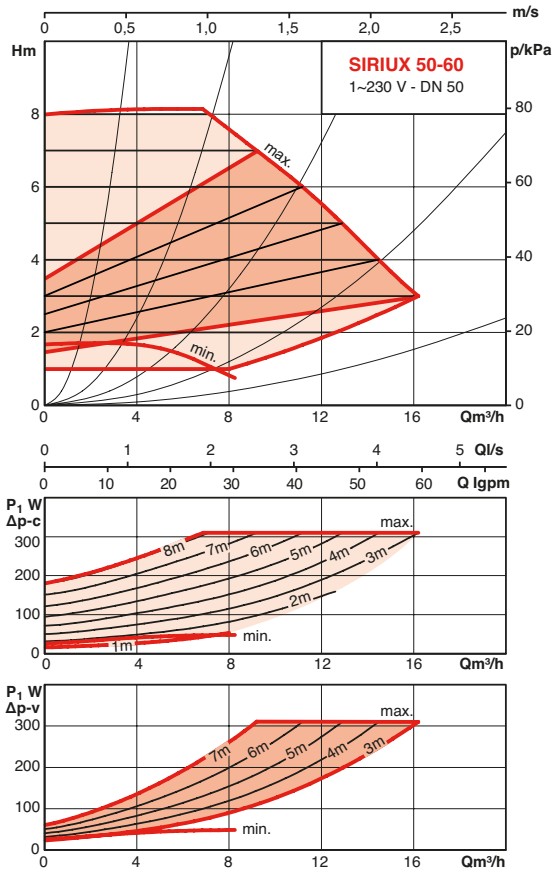

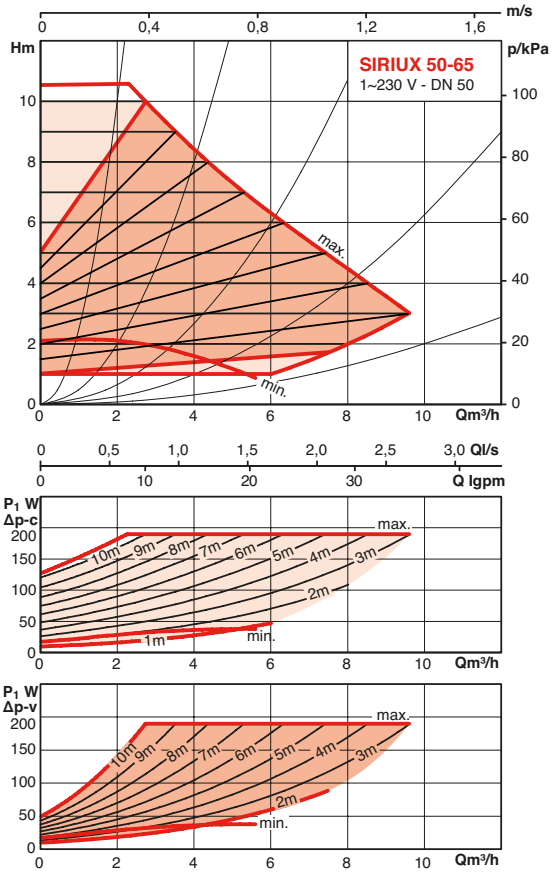

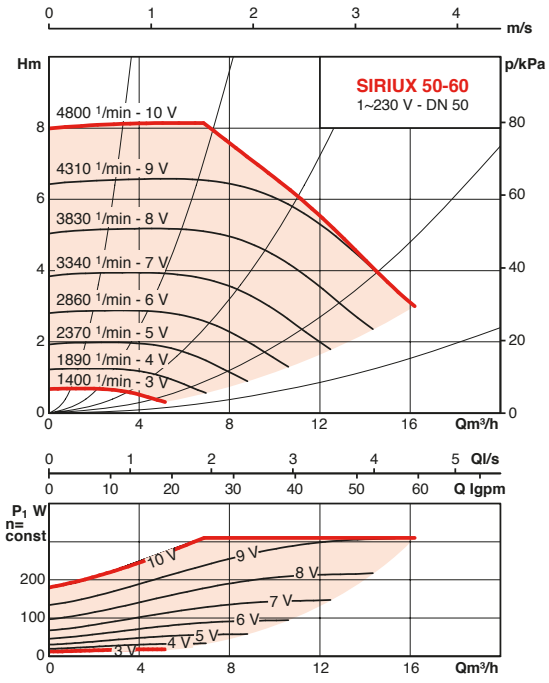

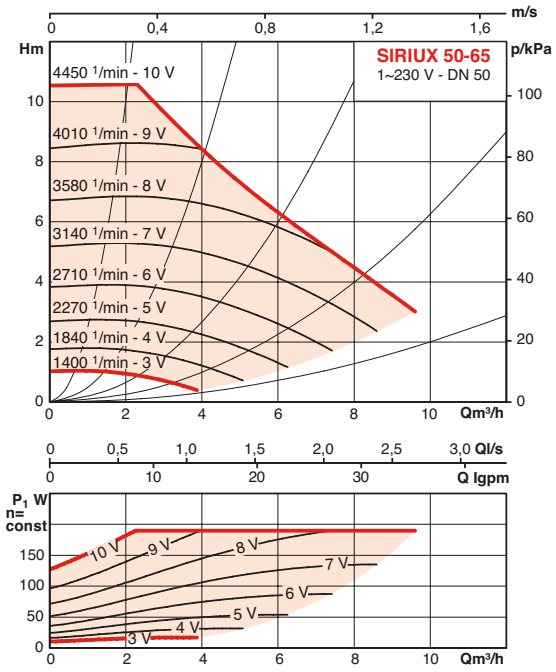

SIRIUX MASTER

SIRIUX 50-70 AND SIRIUX 50-80 HYDRAULIC PERFORMANCES

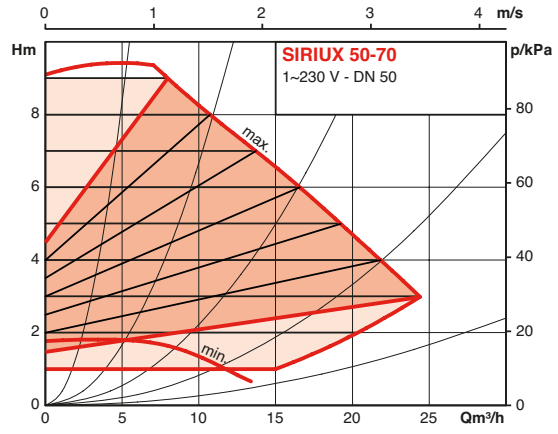

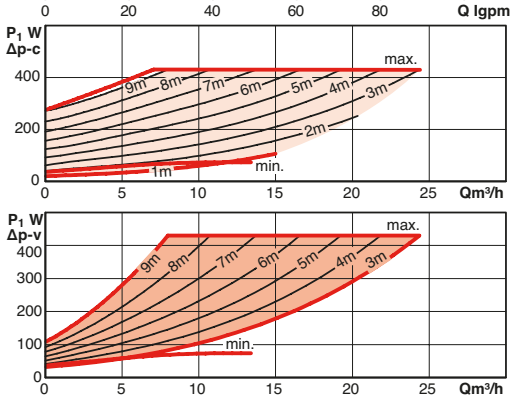

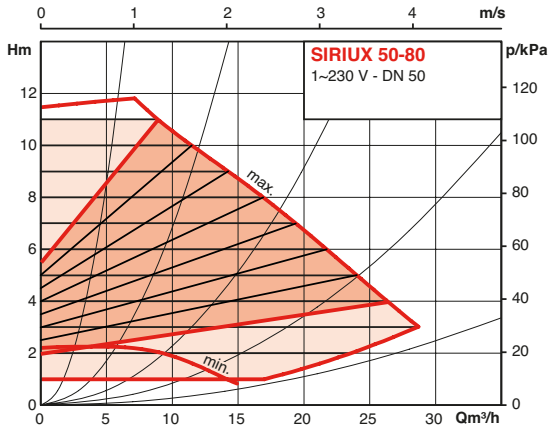

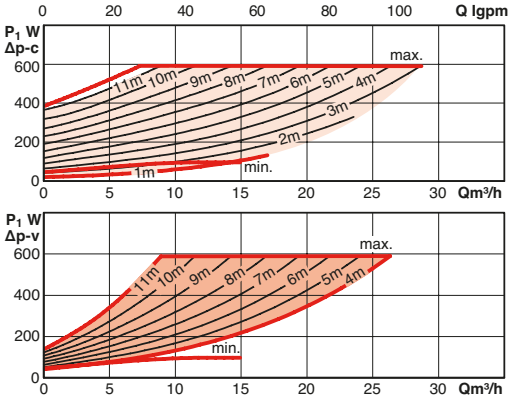

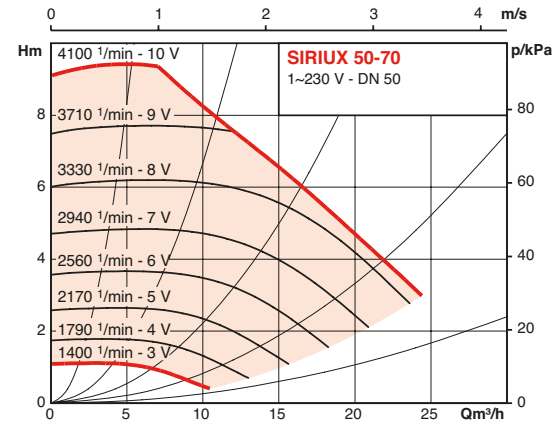

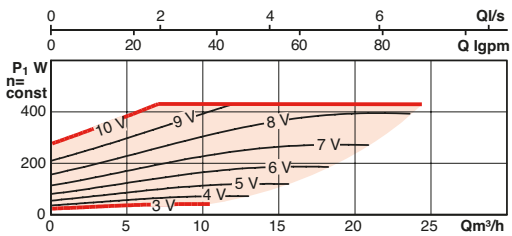

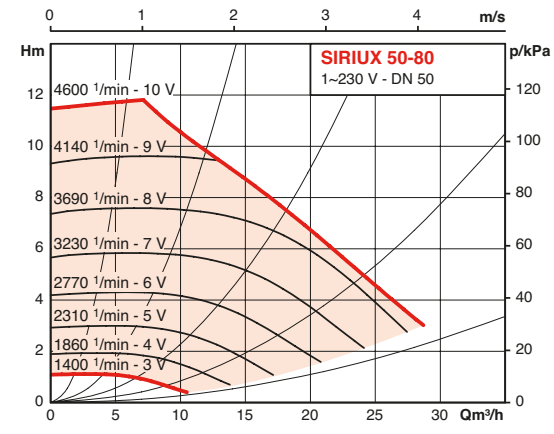

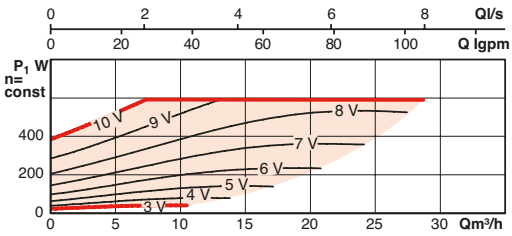

SIRIUX 50-110 AND SIRIUX 65-80 HYDRAULIC PERFORMANCES

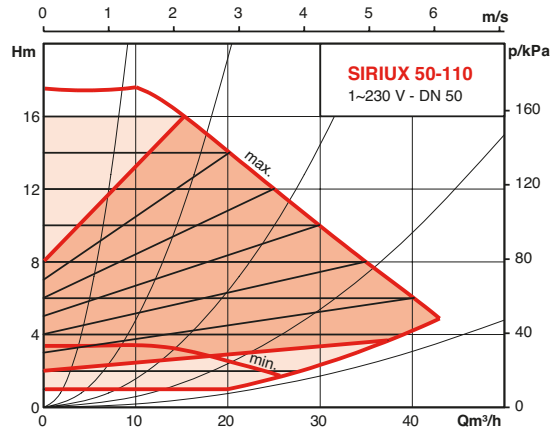

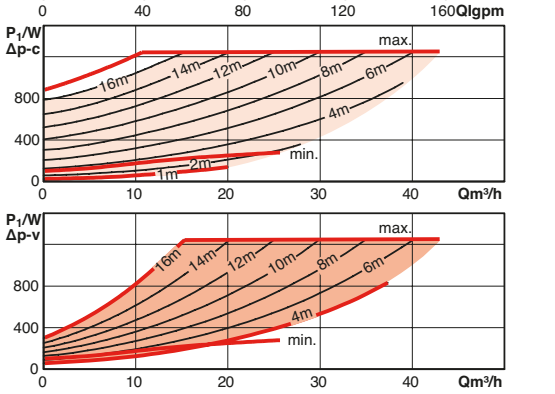

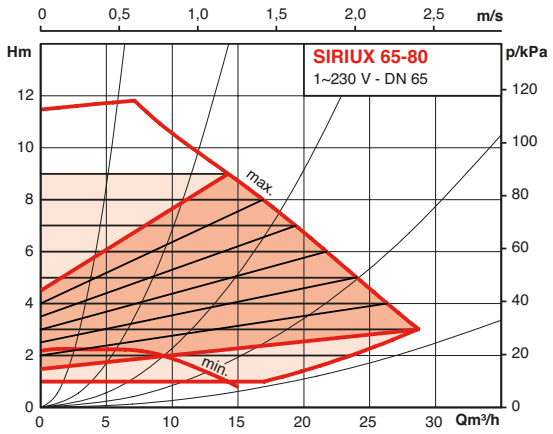

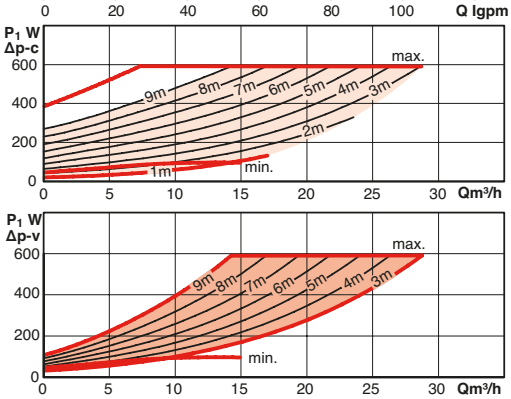

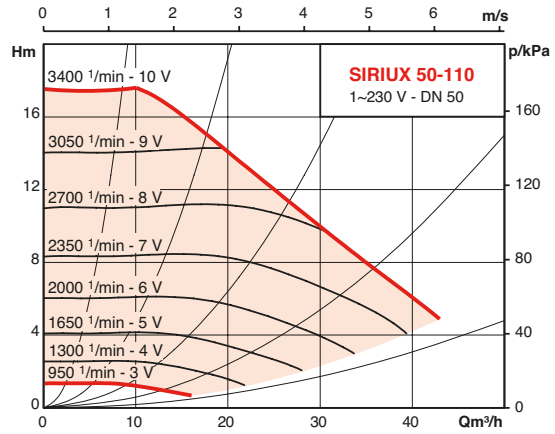

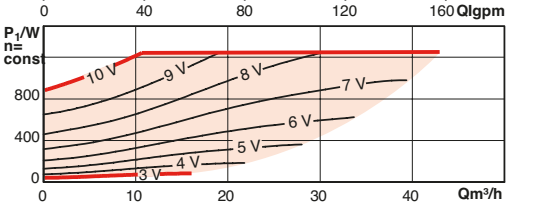

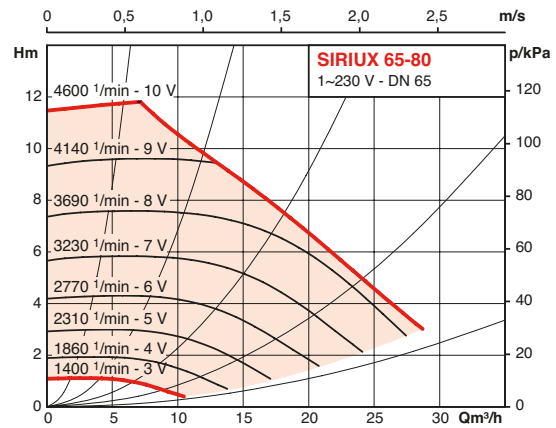

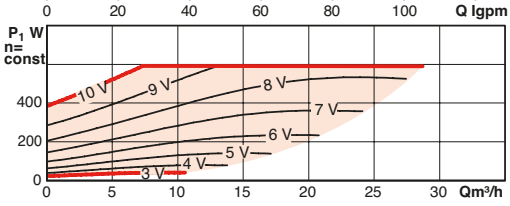

SIRIUX MASTER

SIRIUX 65-90 AND SIRIUX 65-110 HYDRAULIC PERFORMANCES

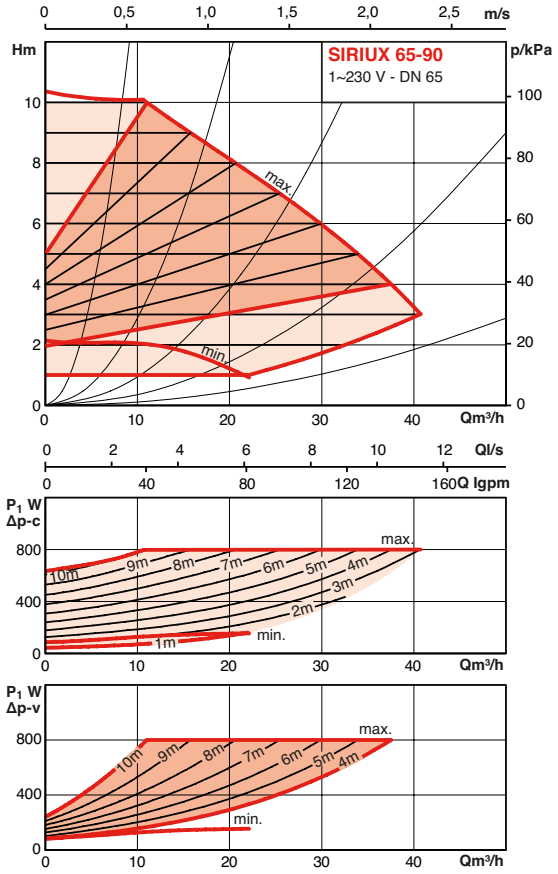

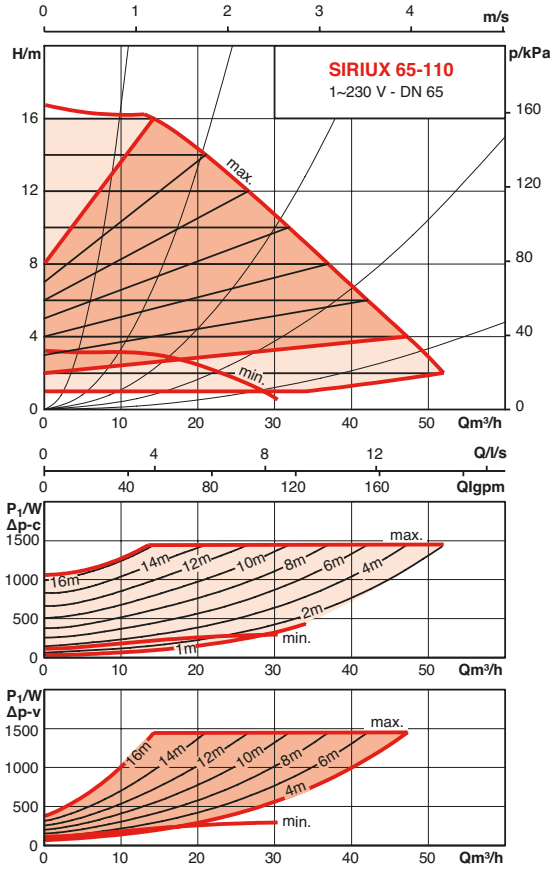

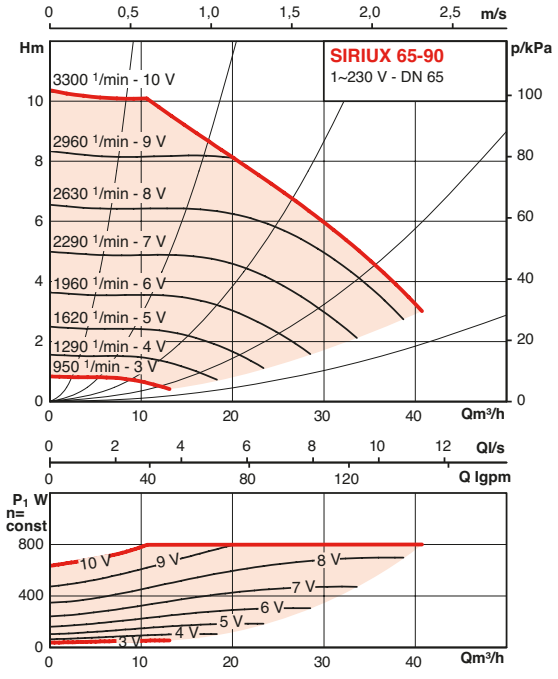

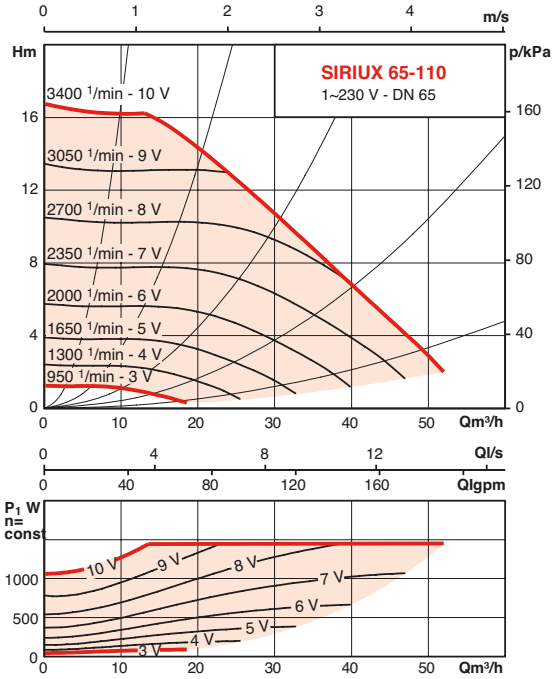

SIRIUX 80-90 HYDRAULIC PERFORMANCES

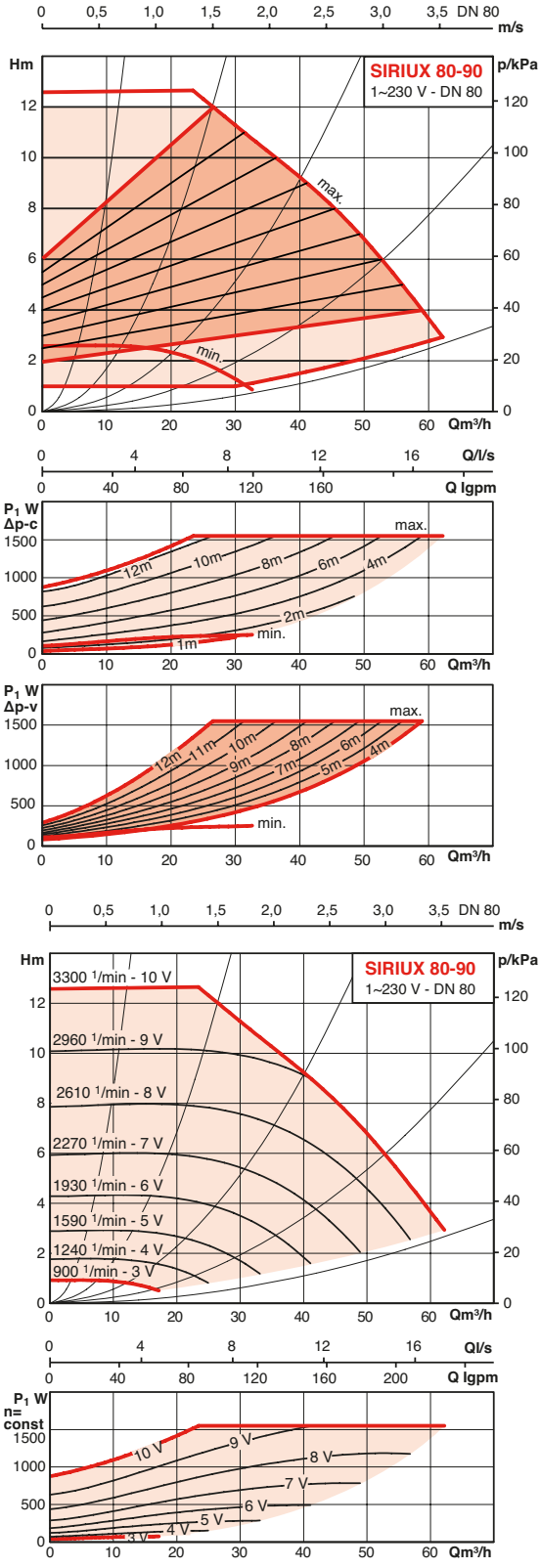

SIRIUX MASTER

SIRIUX D 32-60 AND SIRIUX D 32-70 HYDRAULIC PERFORMANCES

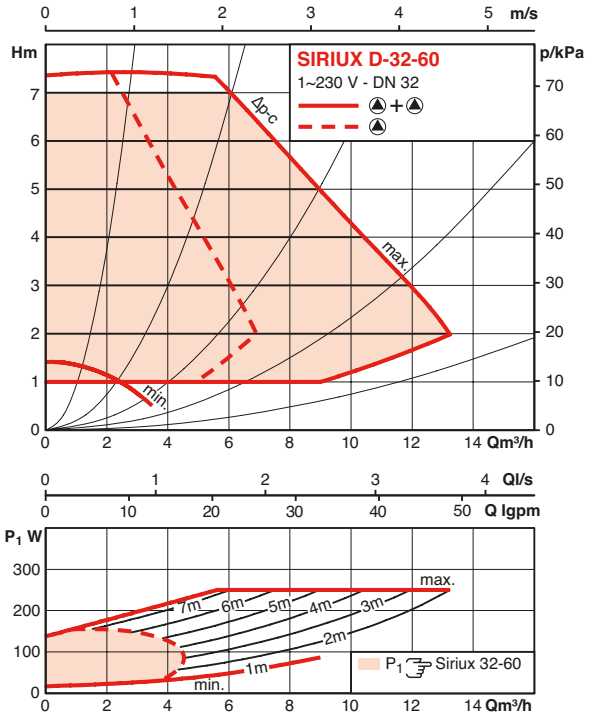

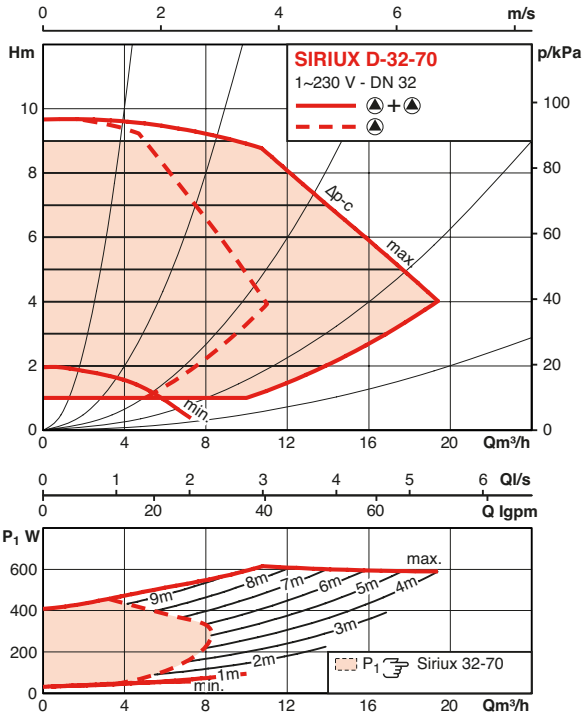

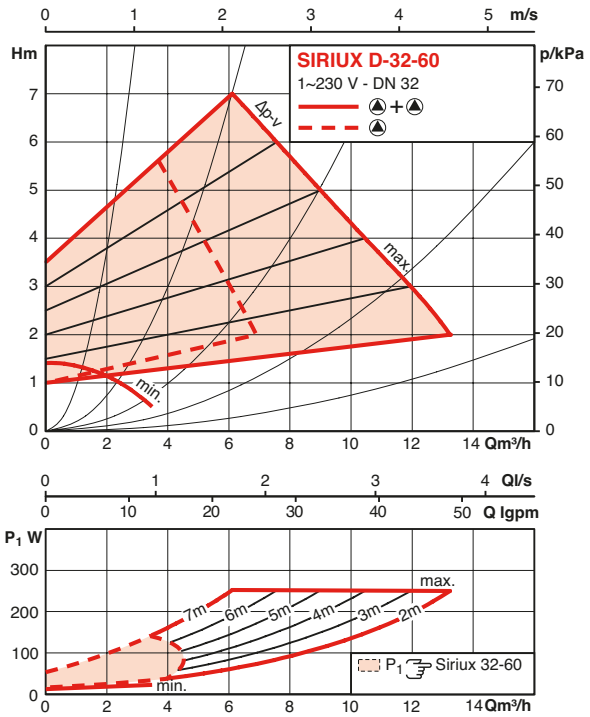

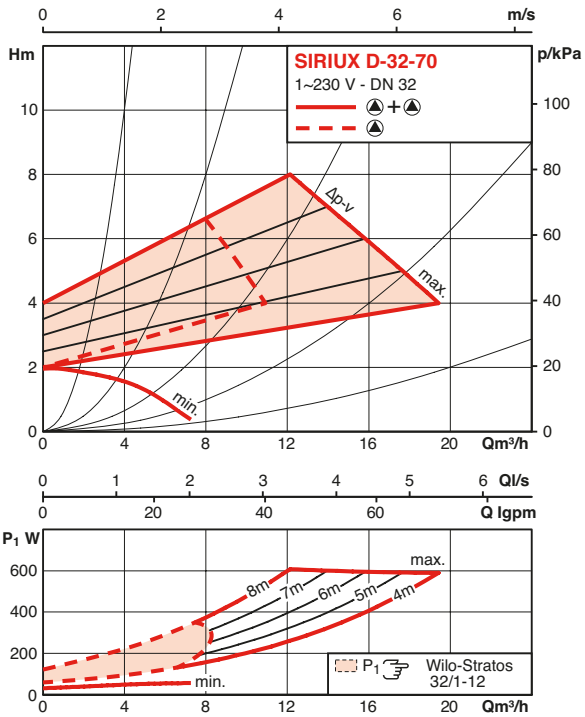

SIRIUX D 40-60 AND SIRIUX D 40-80 HYDRAULIC PERFORMANCES

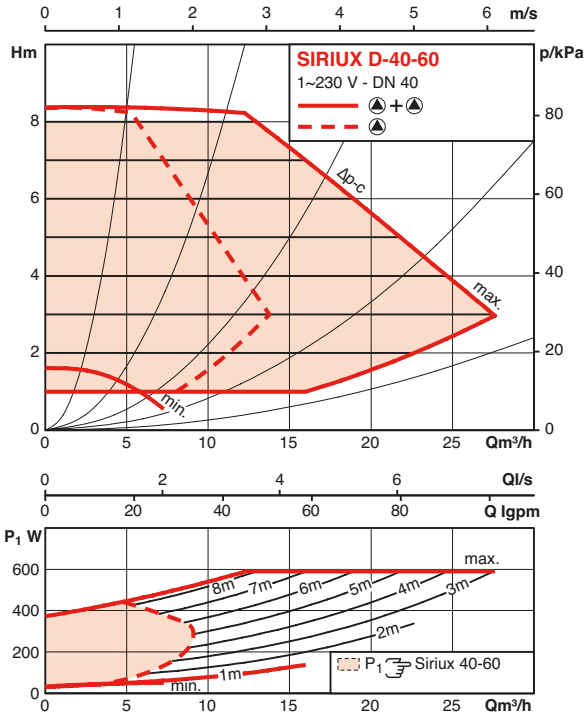

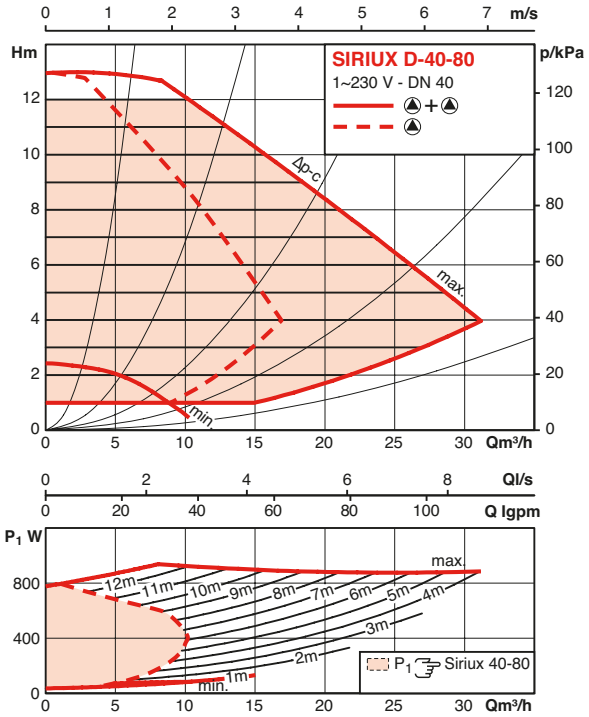

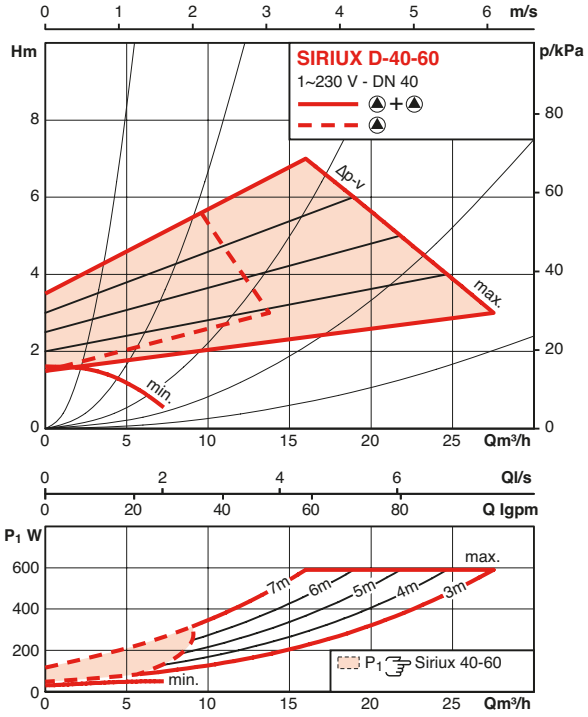

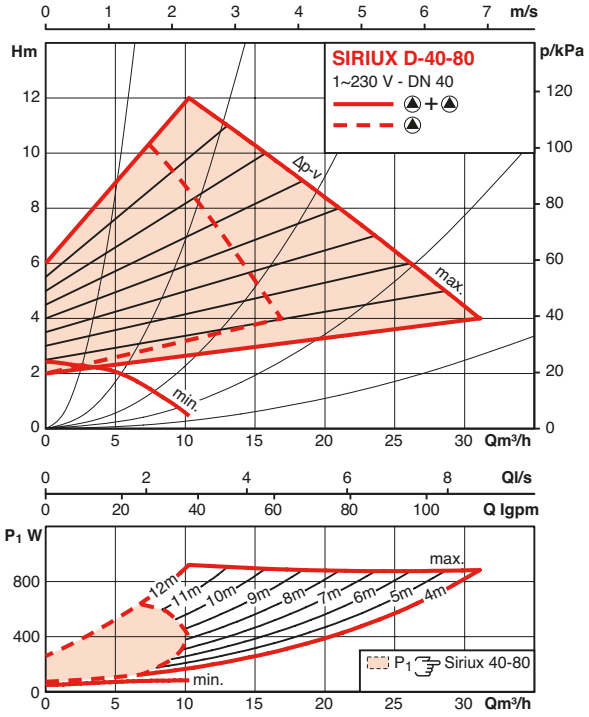

SIRIUX MASTER

SIRIUX D 40-110 AND SIRIUX D 50-60 HYDRAULIC PERFORMANCES

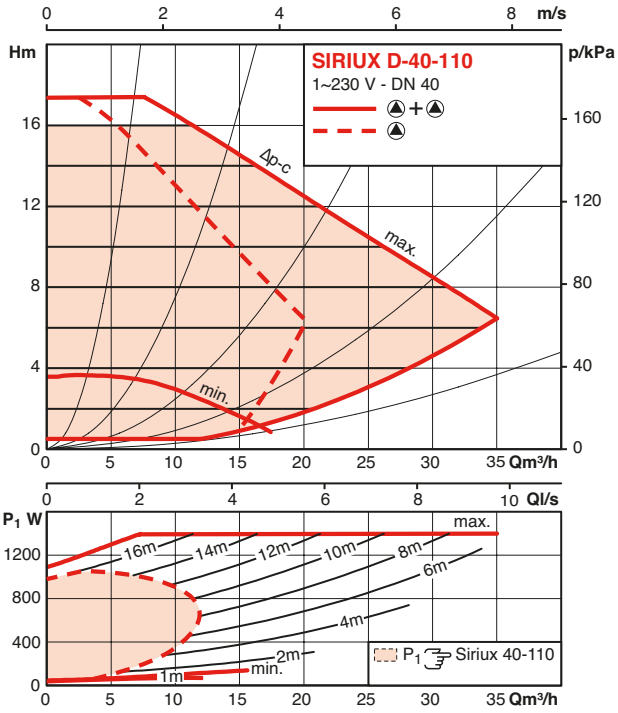

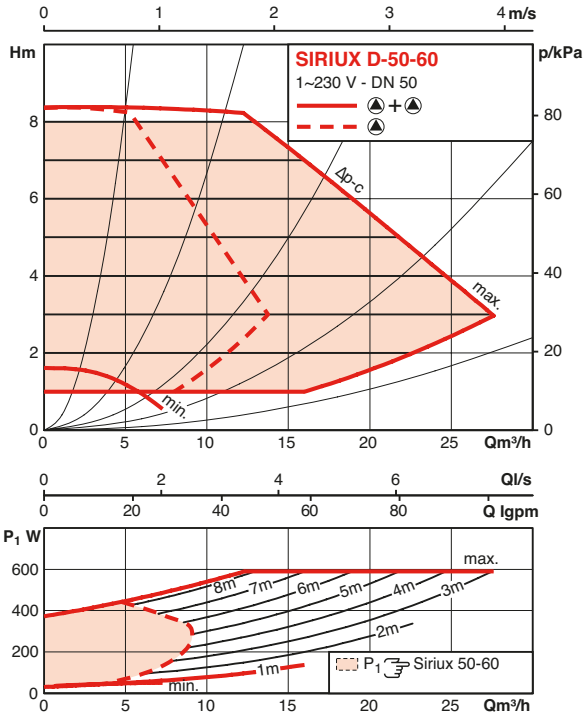

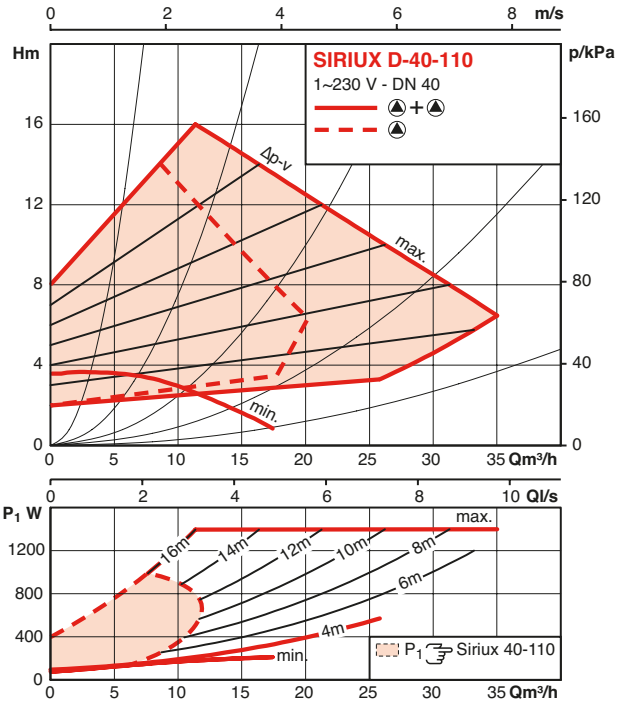

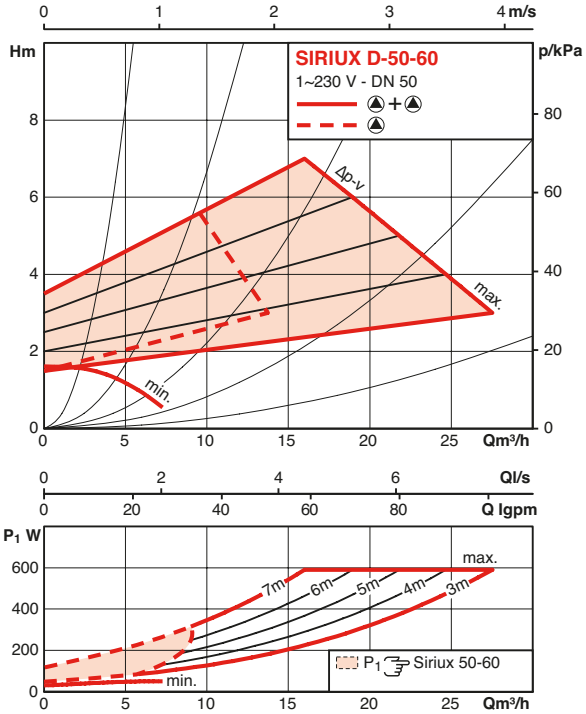

SIRIUX D 50-70 ET SIRIUX D 50-80 HYDRAULIC PERFORMANCES

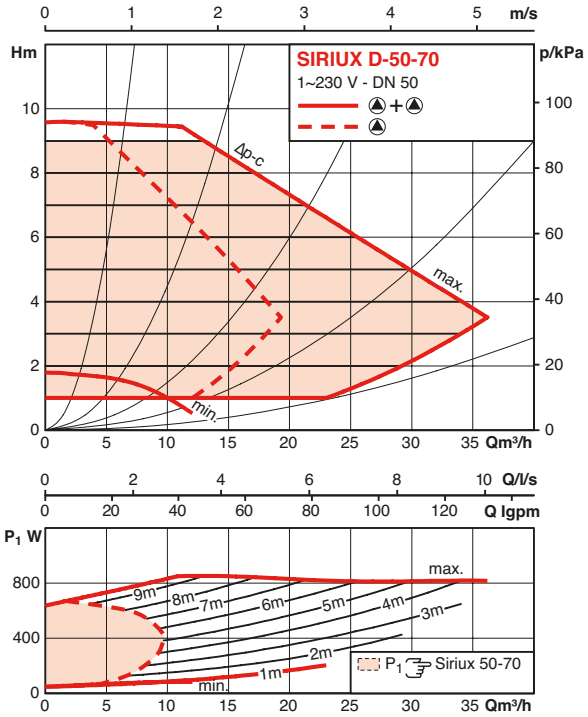

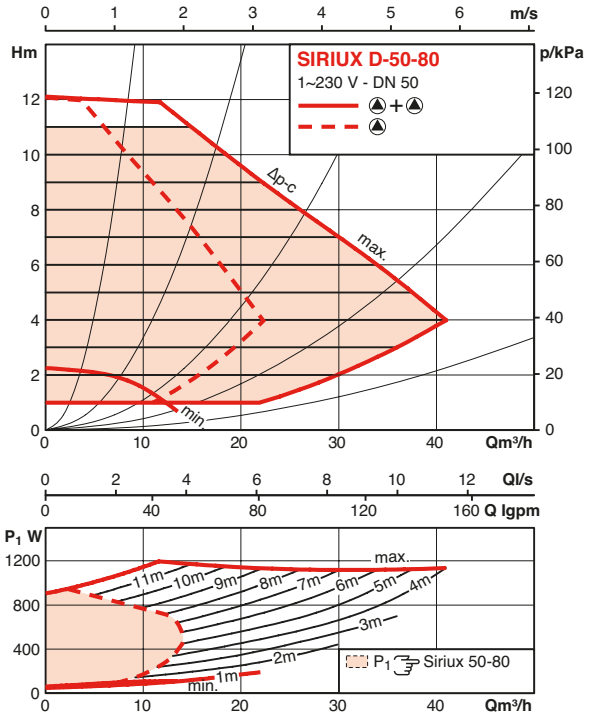

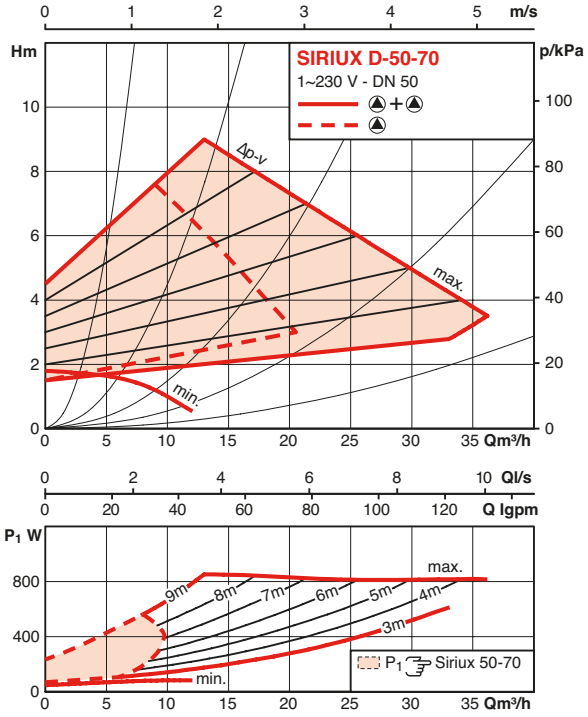

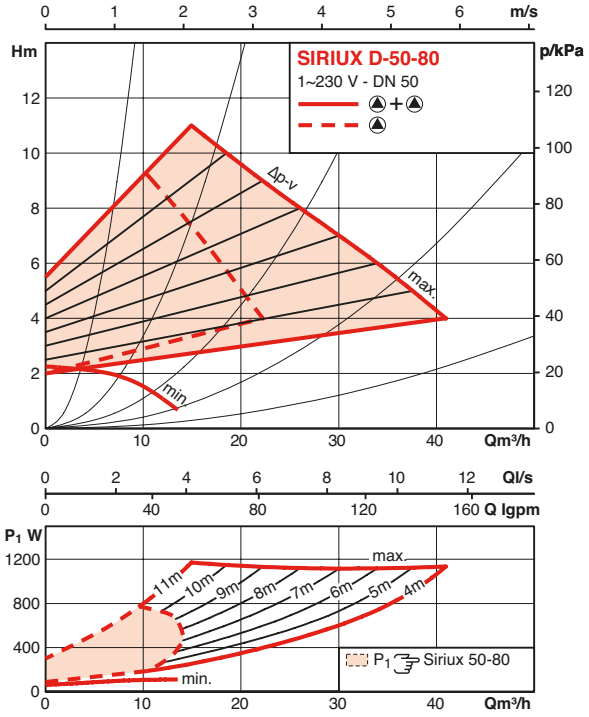

SIRIUX MASTER

SIRIUX D 50-110 AND SIRIUX D 65-90 HYDRAULIC PERFORMANCES

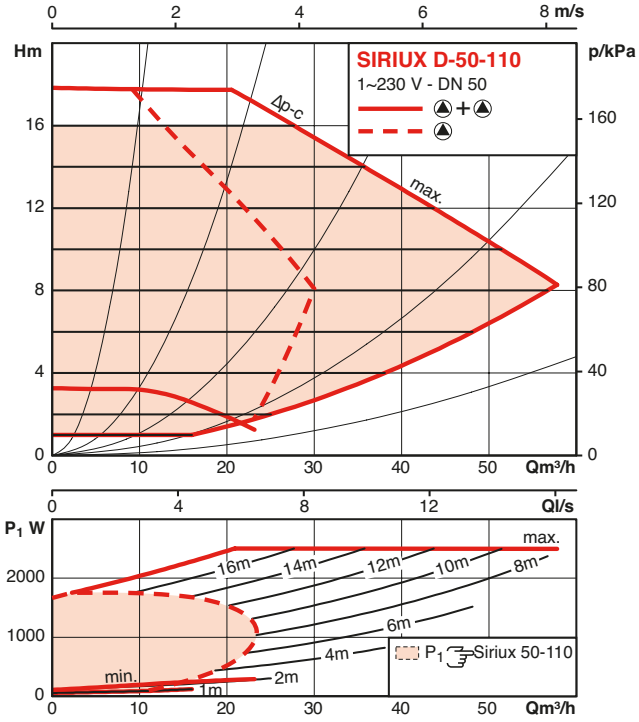

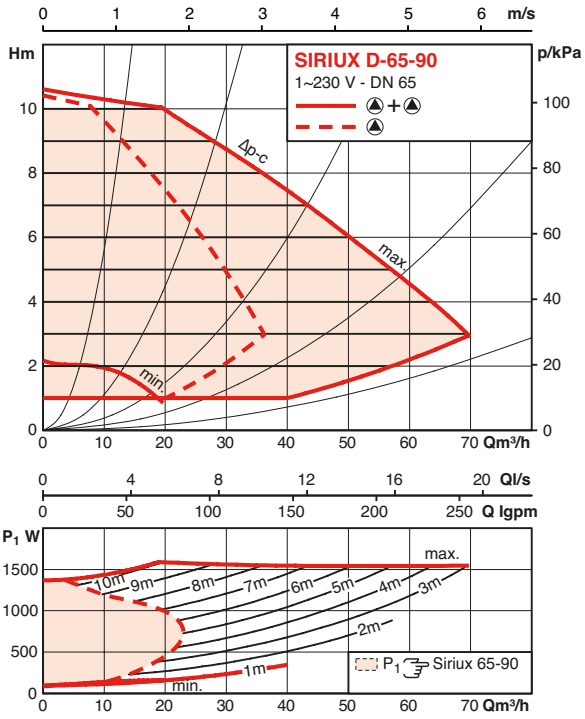

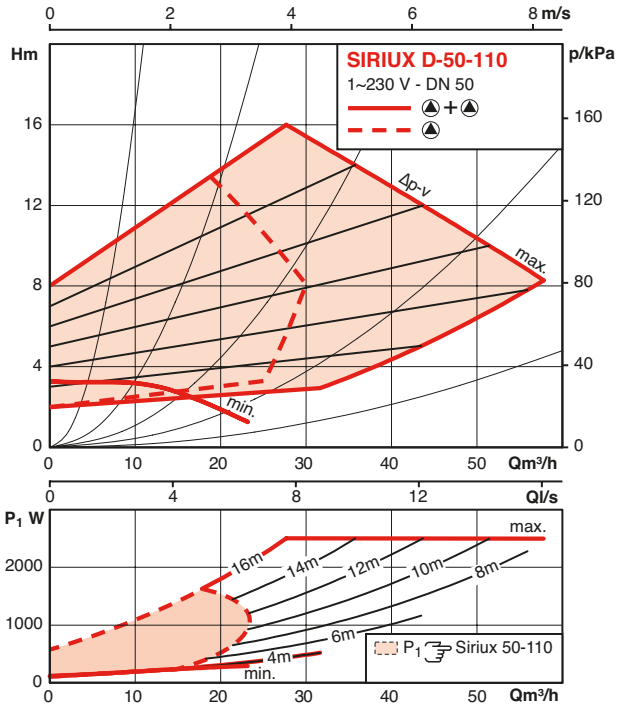

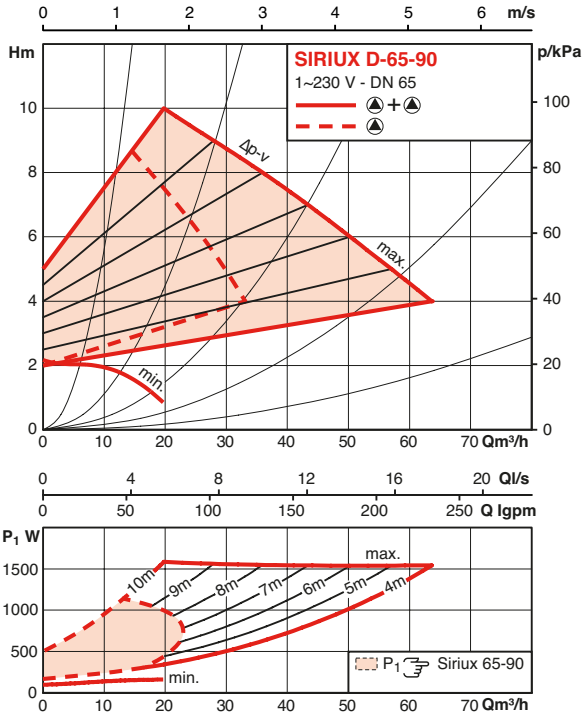

SIRIUX D 65-110 AND SIRIUX D 80-90 HYDRAULIC PERFORMANCES

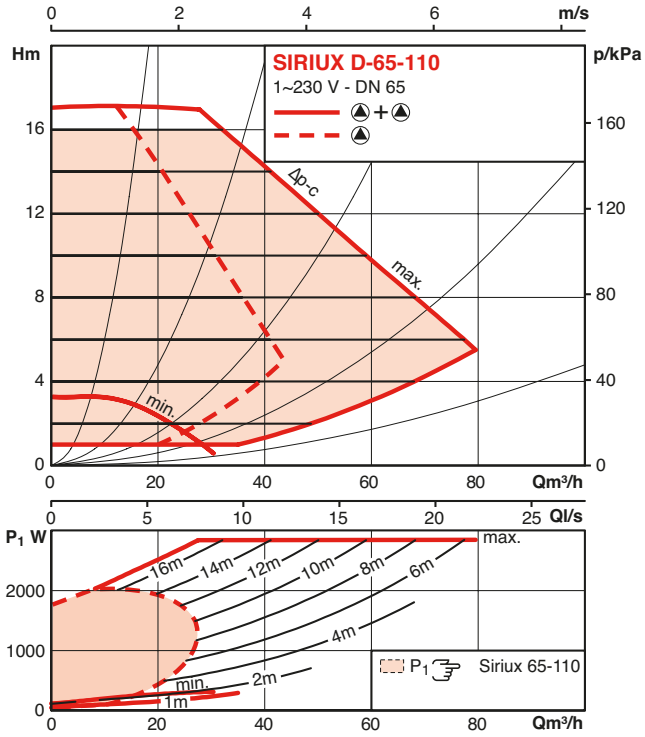

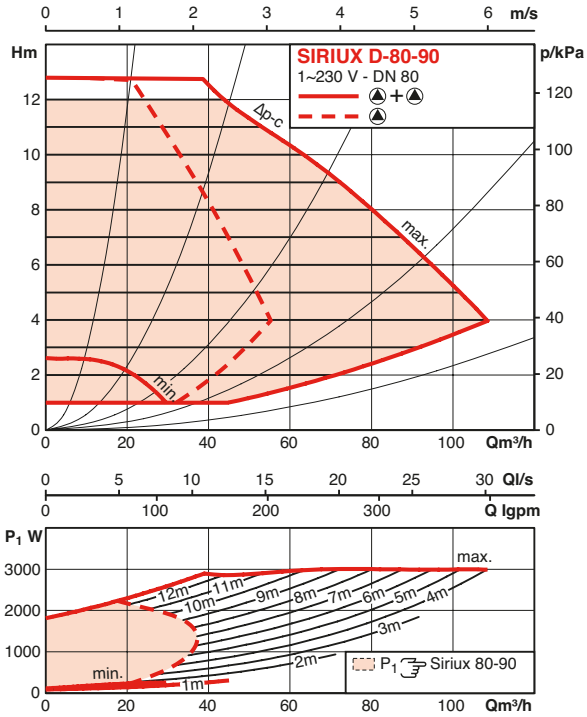

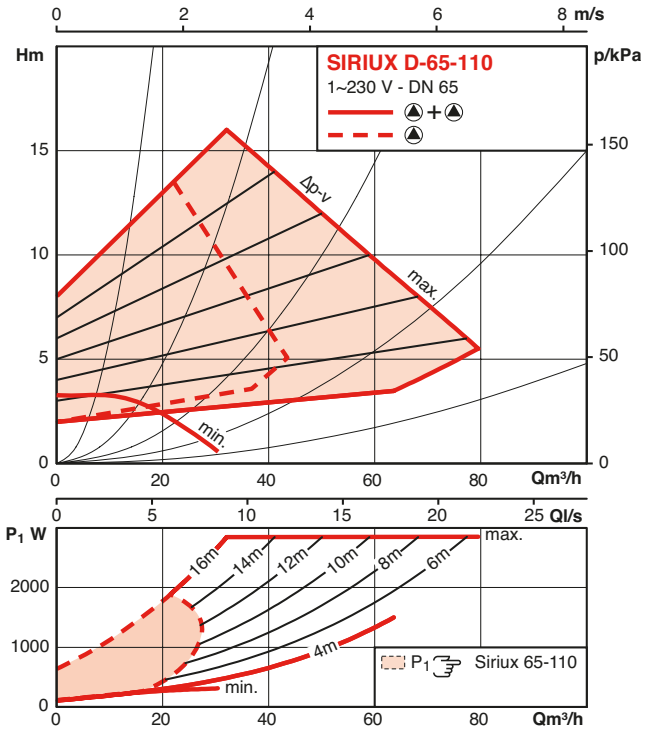

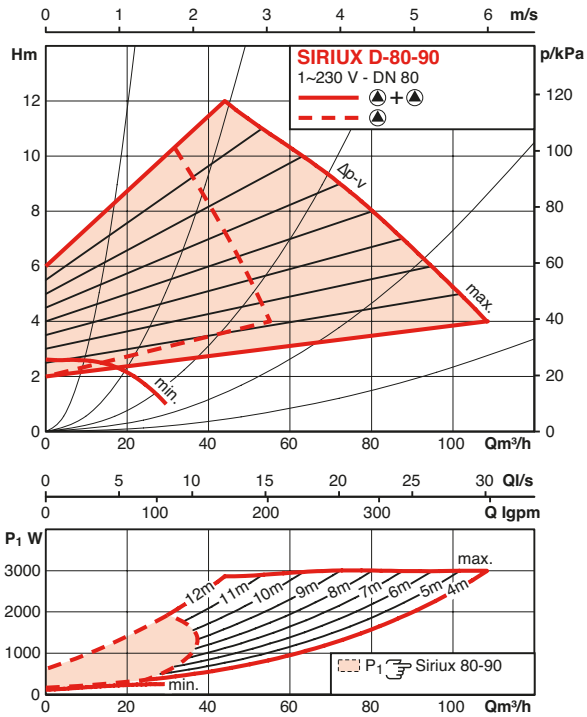

SIRIUX MASTER

MOTOR DATA - SIRIUX

	Rated power	Speed	Power consumption	Current at 1~230V	Current at 3~400V	Motor protection	Pg thread connection
	P2 [W]	n [1/min]	P1 [W]	I [A]			
25-30	30	1400 - 2800	9 - 38	0,13 - 0,35	-	integrated	1 x 7/ 1 x 9/ 1 x 13,5
25-40	65	1400 - 3400	9 - 85	0,13 - 0,78	-	integrated	1 x 7/ 1 x 9/ 1 x 13,5
25-60	100	1400 - 3700	9 - 130	0,13 - 1,20	-	integrated	1 x 7/ 1 x 9/ 1 x 13,5
25-65	140	1400 - 4450	9 - 190	0,13 - 1,30	-	integrated	1 x 7/ 1 x 9/ 1 x 13,5
32-30	30	1400 - 2800	9 - 38	0,13 - 0,35	-	integrated	1 x 7/ 1 x 9/ 1 x 13,5
32-40	65	1400 - 3400	9 - 85	0,13 - 0,78	-	integrated	1 x 7/ 1 x 9/ 1 x 13,5
32-60	100	1400 - 3700	9 - 130	0,13 - 1,20	-	integrated	1 x 7/ 1 x 9/ 1 x 13,5
32-65	140	1400 - 4450	9 - 190	0,13 - 1,30	-	integrated	1 x 7/ 1 x 9/ 1 x 13,5
32-65F	140	1400 - 4450	9 - 190	0,13 - 1,30	-	integrated	1 x 7/ 1 x 9/ 1 x 13,5
32-90	200	1400 - 4800	12 - 310	0,22 - 1,37	-	integrated	1 x 7/ 1 x 9/ 1 x 13,5
32-70	200	1400 - 4800	12 - 310	0,22 - 1,37	-	integrated	1 x 7/ 1 x 9/ 1 x 13,5
40-30	100	1600 - 3700	14 - 130	0,16 - 1,20	-	integrated	1 x 7/ 1 x 9/ 1 x 13,5
40-60	200	1400 - 4800	12 - 310	0,22 - 1,37	-	integrated	1 x 7/ 1 x 9/ 1 x 13,5
40-65	140	1400 - 4450	9 - 190	0,13 - 1,30	-	integrated	1 x 7/ 1 x 9/ 1 x 13,5
40-80	350	1400 - 4600	25 - 470	0,20 - 2,05	-	integrated	1 x 7/ 1 x 9/ 1 x 13,5
40-110	600	950 - 3500	35 - 730	0,30 - 3,20	-	integrated	1 x 7/ 1 x 9/ 1 x 13,5
50-60	200	1400 - 4800	12 - 310	0,22 - 1,37	-	integrated	1 x 7/ 1 x 9/ 1 x 13,5
50-65	140	1400 - 4450	9 - 190	0,13 - 1,30	-	integrated	1 x 7/ 1 x 9/ 1 x 13,5
50-70	350	1400 - 4100	25 - 430	0,20 - 1,88	-	integrated	1 x 7/ 1 x 9/ 1 x 13,5
50-80	500	1400 - 4600	25 - 590	0,20 - 2,60	-	integrated	1 x 7/ 1 x 9/ 1 x 13,5
50-110	1050	950 - 3400	40 - 1250	0,30 - 5,50	-	integrated	1 x 7/ 1 x 9/ 1 x 13,5
65-80	500	1400 - 4600	25 - 590	0,20 - 2,60	-	integrated	1 x 7/ 1 x 9/ 1 x 13,5
65-90	650	950 - 3300	38 - 800	0,30 - 3,50	-	integrated	1 x 7/ 1 x 9/ 1 x 13,5
65-110	1200	950 - 3400	40 - 1450	0,30 - 6,40	-	integrated	1 x 7/ 1 x 9/ 1 x 13,5
80-90	1300	900 - 3300	40 - 1550	0,32 - 6,80	-	integrated	1 x 7/ 1 x 9/ 1 x 13,5

MOTOR DATA - SIRIUX D

	Rated power	Speed	Power consumption	Current at 1~230V	Current at 3~400V	Motor protection	Pg thread connection
	P2 [W]	n [1/min]	P1 [W]	I [A]			
32-60	100	1400 - 3700	9 - 130	0,13 - 1,20	-	integrated	1 x 7/1 x 9/1 x 13,5
32-70	200	1400 - 4800	12 - 310	0,22 - 1,37	-	integrated	1 x 7/1 x 9/1 x 13,5
40-60	200	1400 - 4800	12 - 310	0,22 - 1,37	-	integrated	1 x 7/1 x 9/1 x 13,5
40-80	350	1400 - 4600	25 - 470	0,20 - 2,05	-	integrated	1 x 7/1 x 9/1 x 13,5
40-110	600	950 - 3500	35 - 730	0,30 - 3,20	-	integrated	1 x 7/ 1 x 9/ 1 x 13,5
50-60	200	1400 - 4800	12 - 310	0,22 - 1,37	-	integrated	1 x 7/1 x 9/1 x 13,5
50-70	350	1400 - 4100	25 - 430	0,20 - 1,88	-	integrated	1 x 7/1 x 9/1 x 13,5
50-80	500	1400 - 4600	25 - 590	0,20 - 2,60	-	integrated	1 x 7/1 x 9/1 x 13,5
50-110	1050	950 - 3400	40 - 1250	0,30 - 5,50	-	integrated	1 x 7/ 1 x 9/ 1 x 13,5
65-90	650	950 - 3300	38 - 800	0,30 - 3,50	-	integrated	1 x 7/1 x 9/1 x 13,5
65-110	1200	950 - 3400	40 - 1450	0,30 - 6,40	-	integrated	1 x 7/ 1 x 9/ 1 x 13,5
80-90	1300	900 - 3300	40 - 1550	0,32 - 6,80	-	integrated	1 x 7/1 x 9/1 x 13,5

DIMENSIONS - SIRIUX

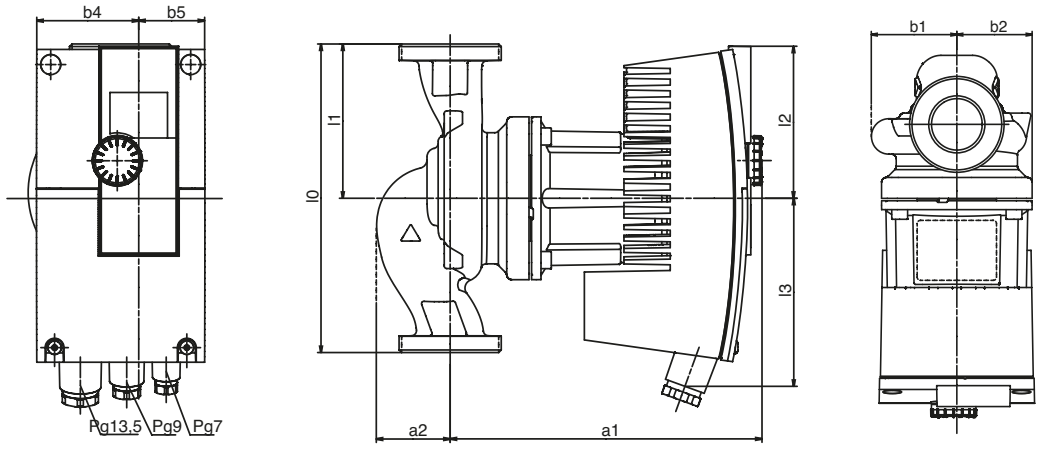

Drawing A

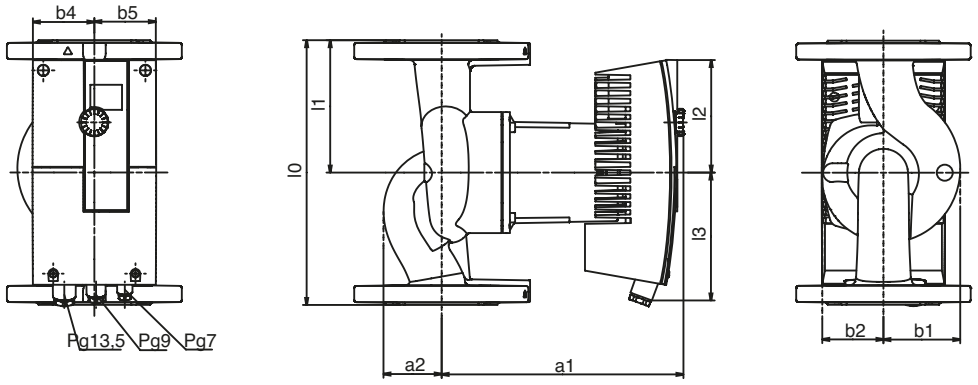

Drawing B

Nominal Diameter	Pipe diameter	Threaded	a1	a2	b1	b2	b4	b5	l0	l1	l2	l3	Weight	Drawing
DN	Rp	G	mm	mm	mm	mm	mm	mm	mm	mm	mm	mm	kg	-
25-30	–	1	11/2	182	43	54	48	49	49	180	90	89	114	4,1	A
25-40	–	1	11/2	182	43	54	48	49	49	180	90	89	114	4,1	A
25-60	–	1	11/2	182	43	54	48	49	49	180	90	89	114	4,1	A
25-65	–	1	11/2	182	43	54	48	49	49	180	90	89	114	4,1	A
32-30		11/4	2	182	43	54	48	49	49	180	90	89	114	4,2	A
32-40	–	11/4	2	182	43	54	48	49	49	180	90	89	114	4,2	A
32-60	–	11/4	2	182	43	54	48	49	49	180	90	89	114	4,2	A
32-65	–	11/4	2	182	43	54	48	49	49	180	90	89	114	4,2	A
32-65F	32	–	–	179	48	57	48	49	49	220	110	89	114	7,6	B
32-90	–	11/4	2	201	50	61	54	55	55	180	90	106	120	5,5	A
32-70	32	–	–	204	48	63	54	55	55	220	110	106	120	9,0	B
40-30	40	–	–	177	57	65	48	49	49	220	110	89	114	8,3	B
40-60	40	–	–	203	53	66	54	55	55	220	110	106	120	9,2	B
40-65	40	–	–	183	53	59	48	49	49	220	110	89	114	7,8	B
40-80	40	–	–	252	62	73	64	66	66	250	125	120	136	14,0	B
40-110	40	–	–	325	62	83	90	78	78	250	125	156	164	23,5	B
50-60	50	–	–	208	49	66	54	55	55	240	120	106	120	10,6	B
50-65	50	–	–	186	52	59	48	49	49	240	120	89	114	9,3	B
50-70	50	–	–	256	62	82	64	66	66	280	140	120	136	15,5	B
50-80	50	–	–	256	62	82	64	66	66	280	140	120	136	15,5	B
50-110	50	–	–	323	66	96	90	78	78	340	170	156	164	26,5	B
65-80	65	–	–	256	62	82	64	66	66	280	140	120	136	17,0	B
65-90	65	–	–	325	87	102	84	78	78	340	170	156	164	29,0	B
65-110	65	–	–	323	66	107	90	78	78	340	170	156	164	29,0	B
80-90	80	–	–	329	90	113	90	78	78	360	180	156	164	31,0	B

SIRIUX MASTER

DIMENSIONS - SIRIUX D

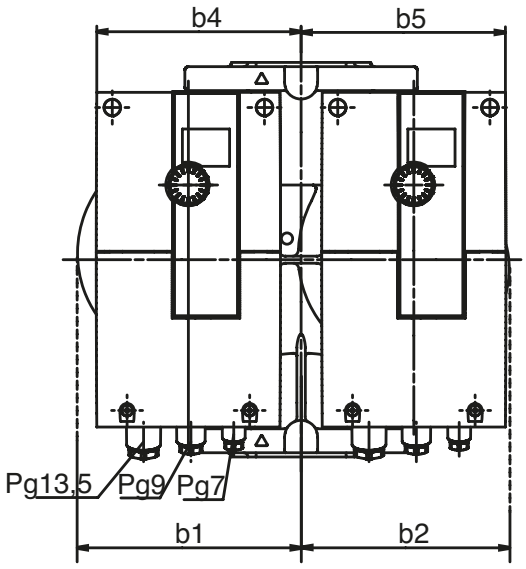

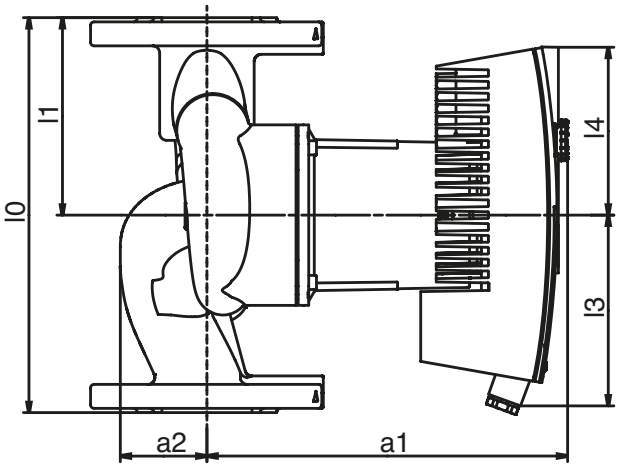

Drawing A

	Nominal dia.	Dimensions										Weight	Dimension drawing
	DN	l0	l1	l3	l4	a1	a2	b1	b2	b4	b5	m	-
	[-]	[mm]										[kg]	[-]
32-60	32	220	110	114	89	182	44	112	106	107	107	12,0	A
32-70	32	220	110	120	106	204	57	117	130	110	130	16,5	A
40-60	40	220	110	120	106	200	64	125	138	115	135	16,6	A
40-80	40	250	125	136	120	252	62	151	144	145	145	25,0	A
40-110	40	250	125	164	156	310	65	192	192	188	188	44,0	A
50-60	50	240	120	120	106	204	61	123	135	113	132	18,0	A
50-70	50	280	140	136	120	256	62	159	148	145	145	27,0	A
50-80	50	280	140	136	120	256	62	159	148	145	145	27,0	A
50-110	50	340	170	164	156	305	70	201	192	188	188	48,0	A
65-90	65	340	170	164	156	325	88	209	196	188	188	52,8	A
65-110	65	340	170	164	156	309	80	221	202	198	188	51,0	A
80-90	80	360	180	164	156	329	100	235	221	203	203	61,0	A

FLANGES SIRIUX

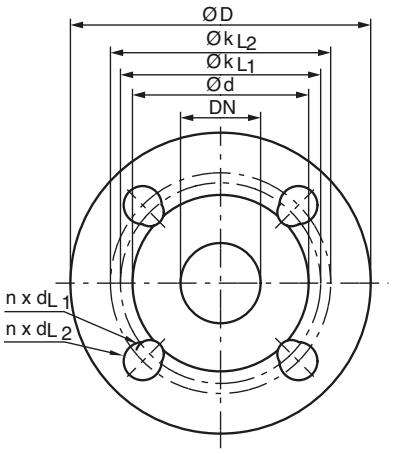

Drawing C

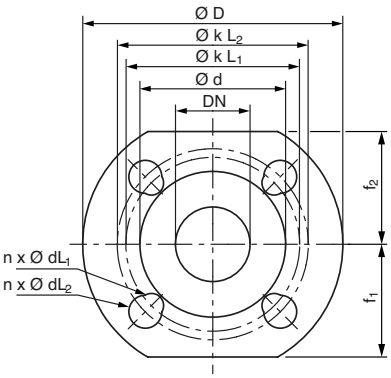

Drawing D

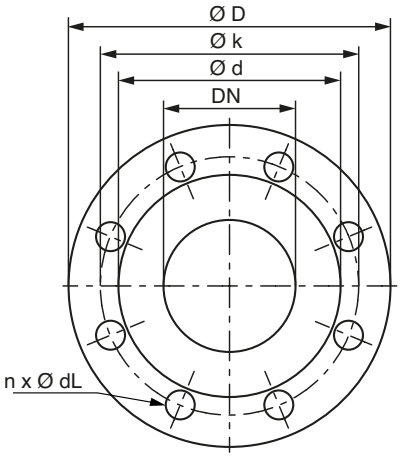

Drawing E

	Flange	Nominal dia.	Pump flange dimensions							Dimension drawing
	-	DN	D	d	KL1/KL2	Dia. k	n x dL1/dL2	n x dL	f_1 / f_2	-
	[-]	[-]	[mm]				[pcs. x mm]		[mm]	[-]
32-65F	Combination flange PN6/10 (flange PN 16 according to EN 1092-2)	32	140	76	90/100	–	4 x 14 / 19	-	-	C
32-70	Combination flange PN6/10 (flange PN 16 according to EN 1092-2)	32	140	76	90/100	–	4 x 14 / 19	-	-	C
40-30	Combination flange PN6/10 (flange PN 16 according to EN 1092-2)	40	150	84	100/110	–	4 x 14 / 19	-	-	C
40-60	Combination flange PN6/10 (flange PN 16 according to EN 1092-2)	40	150	84	100/110	–	4 x 14 / 19	-	-	C
40-65	Combination flange PN6/10 (flange PN 16 according to EN 1092-2)	40	150	84	100/110	–	4 x 14 / 19	-	-	C
40-80	Combination flange PN6/10 (flange PN 16 according to EN 1092-2)	40	150	84	100/110	–	4 x 14 / 19	-	-	C
40-110	Combination flange PN6/10 (flange PN 16 according to EN 1092-2)	40	150	84	100/110	–	4 x 14 / 19	-	65/65	D
50-60	Combination flange PN6/10 (flange PN 16 according to EN 1092-2)	50	165	99	110/125	–	4 x 14 / 19	-	-	C
50-65	Combination flange PN6/10 (flange PN 16 according to EN 1092-2)	50	165	99	110/125	–	4 x 14 / 19	-	-	C
50-70	Combination flange PN6/10 (flange PN 16 according to EN 1092-2)	50	165	99	110/125	–	4 x 14 / 19	-	-	C
50-80	Combination flange PN6/10 (flange PN 16 according to EN 1092-2)	50	165	99	110/125	–	4 x 14 / 19	-	-	C
50-110	Combination flange PN6/10 (flange PN 16 according to EN 1092-2)	50	165	99	110/125	–	4 x 14 / 19	-	70/70	D
65-80	Combination flange PN6/10 (flange PN 16 according to EN 1092-2)	65	185	118	130/145	–	4 x 14 / 19	-	-	C
65-90	Combination flange PN6/10 (flange PN 16 according to EN 1092-2)	65	185	118	130/145	–	4 x 14 / 19	-	-	C
65-110	Combination flange PN6/10 (flange PN 16 according to EN 1092-2)	65	185	118	130/145	–	4 x 14 / 19	-	80/80	D
80-90	Flange PN10 (flange PN 16 according to EN 1092-2)	80	200	132	-	160	-	8 x 19	-	E

SIRIUX MASTER

SERIES OVERVIEW



• IF Module Siriux DP
- Retrofittable plug-in IF module for Siriux/ Siriux-D pumps
- Dual-pump management with communication capability (time-, load- and fault-sensitive)



• IF Module Siriux LON
- Retrofittable plug-in IF module for Siriux/ Siriux-D pumps
- Serial digital LON interface for connection to BA building automation via LONWORKS networks: – LONTALK protocol – LONMARK conformity
- Dual-pump management with communication capability (time-, load- and fault-sensitive)



• IF Module Siriux Ext. Off
- Retrofittable plug-in IF module for Siriux/ Siriux-D pumps
- Control input „Overriding Off“
- Control input „0...10 V“ (remote speed or setpoint adjustment) for connection to BA building automation
- Dual-pump management with communication capability (time-, load- and fault-sensitive)



• IF Module Siriux Ext. Min
- Retrofittable plug-in IF module for Siriux/ Siriux-D pumps
- Control input „Overriding Min“ (setback operation without autopilot)
- Control input „0...10 V“ (remote speed or setpoint adjustment) for connection to BA building automation
- Dual-pump management with communication capability (time-, load- and fault-sensitive)



• IF Module Siriux SBM
- Retrofittable plug-in IF module for Siriux/ Siriux-D pumps
- Collective run signal
- Control input „0...10 V“ (remote speed or setpoint adjustment) for connection to BA building automation
- Dual-pump management with communication capability (time-, load- and fault-sensitive)



• IF Module Siriux CAN
- Retrofit plug-in module for pump types Siriux/Siriux-D
- Serial, digital CAN interface for connection to BA building automation via CAN bus system
- Protocol in accordance with the CANopen standard (EN50325-4)
- Communication-capable dual pump management (according to time, load and fault)



• IF Module Siriux Ext. Off/SBM
- Retrofit plug-in module for pump types Siriux/Siriux-D
- Overriding Off control input
- Collective run signal
- Communication-capable dual pump management (according to time, load and fault)



• IF Module Siriux Modbus
- Retrofit plug-in module for the pump types Siriux/Siriux-D
- Serial, digital Modbus RTU interface for connection to building automation (BA) via RS485 bus system
- Protocol “Modbus over Serial Line” in accordance with Modbus-IDA V 1.02
- Communication-capable dual pump management (according to time, load and fault)



• IF Module Siriux BACnet
- Retrofit plug-in module for the pump types Siriux/Siriux-D
- Serial, digital BACnet MS/TP slave for connection to building automation (BA) via RS485 bus system
- Protocol in accordance with the BACnet standard (ISO 16484-5)
- Communication-capable dual pump management (according to time, load and fault)

TECHNICAL DATA

	IF Module Siriux DP IF Module DP	IF Module Siriux Ext. Off	IF Module Siriux Ext. Min	IF Module Siriux SBM	IF Module Siriux Ext. Off/SBM	
					Function Ext. Off	Function SBM
Terminal cross-section	2.5 mm²	1.5 mm²				
Max. cable length	200 m	100 m				
Bus cable	Cable shielded	Cable shielded		-	Cable shielded	-
Off-load voltage	-	max 10V		-	max 10V	-
Current loop	-	10 mA		-	10 mA	-
Load capacity		-		30V AC/60V DC 1A - AC1/DC1	-	30V AC/ 60V DC 1A - AC1/DC1
Min load		-		12 V/10mA	-	12 V/10mA
Control input "0...10 V":						
Terminal cross-section	-	1.5 mm²			-	-
Max. cable length	-	25 m (shielded)			-	-
Electric strength	-	24 V =			-	-
Input resistance of voltage input	-	>100 kΩ			-	-
Accuracy	-	± 5 %			-	-

FUNCTIONS TABLES

Integrable dual-pump management for 1 x Siriux-D or 2 x Siriux

Functions of integrable dual-pump management: Main/standby operation, addition operation (efficiency-optimized peak-load cut-in and out), base-load pump change-over after 24 hours accumulated operating time and automatic fault changeover.

Possible combinations of Siriux IF Modules for integrated dual-pump management

Function [1]	IF module DP	IF module LON	IF module CAN	IF module Ext. Off	IF module Ext. Min	IF module SBM	IF module Ext. off/ SBM	IF module Modbus	IF module BACnet	IF module DP-BUS
Serial digital PLR interface for connection to BA via Salmson interface converter or company-specific coupling modules	1x MA 1x SL									
Serial digital LON interface for connection to LONWorks networks, FTT 10 A transceiver	1x SL	1x MA								
Serial digital CAN interface for connection to a CAN bus system			1x MA							1x SL
Input for potential-free NC contact with the „Ext. Off" function [2] 0 - 10 V control input for remote speed adjustment or remote setpoint adjustment [3]	1x SL			1x MA						
Input for potential-free NC contact with „Ext. Min" function [4] 0 - 10 V control input for remote speed adjustment or remote setpoint adjustment [3]	1x SL				1x MA					
Run signal SBM as potential-free NO contact [5] **0 - 10 V control input** for remote speed adjustment or remote setpoint adjustment [3]						1x MA 1x SL				
Input for potential-free NC contact with „Ext. Off" function [2] and SBM run signal as potential-free NO contact							1x MA 1x SL			
Serial digital Modbus interface for connection to a RS485 bus system								1x MA		1x SL
Serial digital MS/TP BACnet for connection to a RS485 bus system									1x MA	1x SL

MA = Master, SL = Slave
1) The control function acts on the entire twin-head pump.
1) The control function is put onto MA of the twin-head pump.
1) The SL of the twin-head pump receives the corresponding command from the MA via the DP interface of the IF modules (2-core connecting cable)
2) Both drives are stopped.
3) The control input 0…10 V has different additional functions, see table below
4) The base-load pumps runs at min. speed, the other drive is stopped.
5) Collective run signal indicates rotation of the corresponding drive (individual run signals separate for MA and SL).

SIRIUX MASTER

FUNCTIONS TABLES

Functions of analog input “O-10V“ in integrated dual-pump management

	Double pump operating mode	
Function 0 - 10 V	**Main/ standby**	**Parallel operation**
Remote speed adjustment (DDC) **0 – 1 V: Off** [1] **1 – 3 V: min. speed** [1] **3 – 10 V: n_{min}…n_{max}**	- Speed of base-load pump follows the voltage signal - Base-load pump cycling after 24 operating hours	- Both pumps follow the voltage signal at the same speed
Remote setpoint adjustment **0 – 1 V : Off** [1] **1 – 3 V: H_{min}** **3 – 10 V: H_{min}…H_{max}**	- Base-load pump controls the differential pressure - Base-load pump cycling after 24 operating hours	- Efficiency-optimised activation and deactivation of the peak-load pump - Base-load pump cycling after 24 operating hours

[1] Observe On/Off switching hysteresis.

TECHNICAL DATA IF MODULE SIRIUX

IF Module Modbus

Line type	Bus cable, twisted in pairs shielded 1 x 2 x 0.5 mm²/ 120 Ω characteristic impedance (line type B in accordance with TIA 485-A)
Line length (max.)	1000 m
Spur line	Not permissible
Terminal cross-section	1.5 mm²
Interface	RS485 (TIA-485A), optically insulated
Speed (velocity)	2400, 9600,19200,38400,115200 kBit/s
Format	8 data bits no/even/odd parity 1 bit stop (only 2 without parity)
Protocol	Modbus RTU
Profile	compatible with Digicon Modbus

IF Module CAN

Line type	CAN bus cable, twisted in pairs shielded 1 x 2 x 0.5 mm² / 120 Ω characteristic impedance (line type B in accordance with TIA 485-A)
Line length (max.)	200 m
Spur line	yes, max. 10 m, total max. 50 m
Terminal cross-section	1.5 mm²
Interface	CAN in accordance with ISO 11898-2, optically insulated
Speed (velocity)	125 kBit/s, constant
Format	-
Protocol	CANopen in accordance with CiA DS301 V 4.02
Profile	-

IF Module BACnet

Line type	Bus cable, twisted in pairs shielded 1 x 2 x 0.5 mm²/ 120 Ω characteristic impedance (line type B in accordance with TIA 485-A)
Line length (max.)	1000 m
Spur line	Not permissible
Terminal cross-section	1.5 mm²
Interface	RS485 (TIA-485A), optically insulated
Speed (velocity)	9600, 19200,38400,76800 kBit/s
Format	--
Protocol	BACnet MS/TP version 1 revision 4
Profile	BACnet Smart Sensor, Smart Actor (B-SS, B-SA)

IF MODULE SIRIUX LON

Line type	twisted in pairs, shielded
Line length (max.)	1000 m (bus topology with a max. 3 m spur line) 500 m (free topology, max. 400 m between communicating consumers
Spur line	-
Terminal cross-section	2.5 mm²
Interface	FTT 10A
Speed (velocity)	78 kBits/s, constant
Format	--
Protocol	LONMark Layers 1-6 Interoperability Guidelines 3.2 LONmark Application Layer Interoperability Guidelines 3.2
Profile	LONMark pump controller 8210_10

SALMSON IF MODULE FOR SINGLE AND TWIN-HEAD PUMPS

1x IF Module Siriux Ext. Off

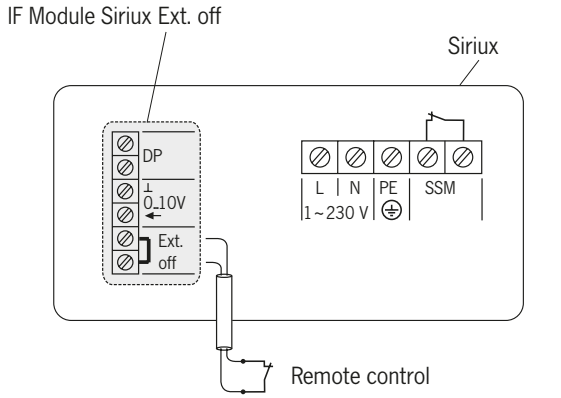

• 1 x Salmson IF Module Siriux Ext. Off

Additional functions

– Input for floating NC contact with «Ext. Off» function
  – Contact closed: pump operating under auto control
  – Contact open: pump stops
– Control input «0 - 10 V» for remote setpoint adjustment or remote speed setting
  – Remote setpoint adjustment: The setpoint value for integrated differential-pressure control is determined for the pump via an analog signal 0 - 10V.
  – Remote speed setting: An external controller issues an actuating signal for remote speed setting (DDC operation).
  The desired function must be activated at the pump
– DP twin-head-pump interface for integrable dual-pump management of 2 x single or 1 x twin-head pump.

Delivery status

The terminals of the «Ext. Off» control input are bridged.

Scope of delivery

– IF-Module Stratos Ext. Off
– EMC screwed connection Pg 9

1x IF Module Siriux Ext. Off (master)
1x IF Module Siriux DP (slave)

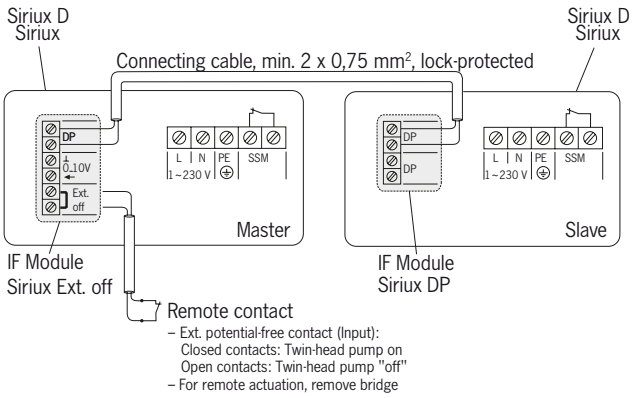

• 1 x Salmson IF Module Siriux Ext. Off (master)
• 1 x Salmson IF Module Siriux DP (slave)

Functions as described at left, plus:

Double pump DP interface for the optional integration of a dual pump management system of 1 x double pump or 2 x single pumps, optionally with the following functions:
– Main/standby operation for automatic fault-actuated switchover to the standby pump and automatic pump alteration after 24 hrs running time

– Parallel operation for efficiency-optimised activation and deactivation of the peak-load pump and automatic fault-actuated switchover to standby pump

The Ext. Off function and the control input 0 – 10 V act on both pumps.

SIRIUX MASTER

SALMSON IF MODULE FOR SINGLE AND TWIN-HEAD PUMPS

1x IF Module Siriux Ext. Min

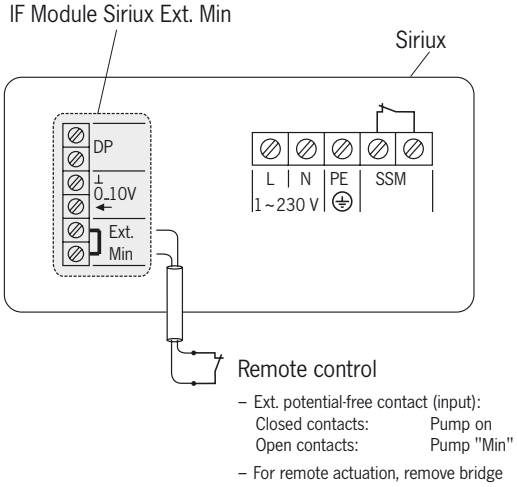

• 1 x Salmson IF Module Siriux Ext. Min

Additional functions

– Input for floating NC contact with «Ext. Min» function (setback operation without autopilot)
  – Contact closed: pump operating under auto control
  – Contact open: pump runs at fixed min. speed (cable shielded)
– Control input «0 - 10 V» for remote setpoint adjustment or remote speed setting
  – Remote setpoint adjustment: The setpoint value for integrated differential-pressure control is determined for the pump via an analog signal 0 - 10 V .
  – Remote speed setting: An external controller issues an actuating signal for remote speed setting (DDC operation).
  The desired function must be activated at the pump
–DP twin-head-pump interface for integrable dual-pump management of 2 single or 1 twin-head pump (see Siriux-IF-Modules for Twin-Head Pumps)

Delivery status

The terminals of the «Ext. Min» control input are bridged.

Scope of delivery

– IF-Module Stratos Ext. Min
– EMC screwed connection Pg 9

1x IF Module Siriux Ext. Min (master)
1x IF Module Siriux DP (slave)

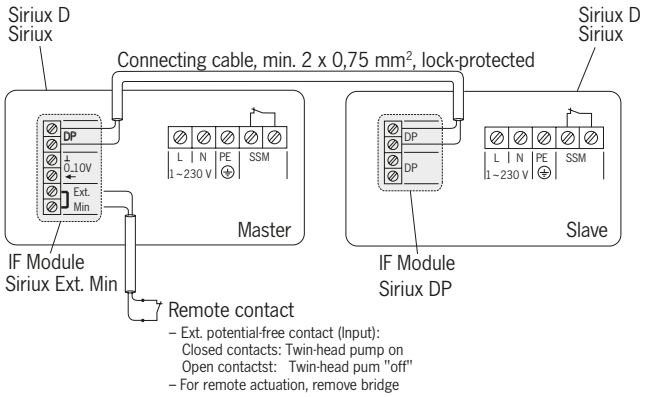

• 1 x Salmson IF Module Siriux Ext. Min (master)
• 1 x Salmson IF Module Siriux DP (slave)

Functions as described at left, plus:

Double pump DP interface for the optional integration of a dual pump management system of 1 x double pump or 2 x single pumps, optionally with the following functions:
– Main/standby operation for automatic fault-actuated switchover to the standby pump and automatic pump alteration after 24 hrs running time

– Parallel operation for efficiency-optimised activation and deactivation of the peak-load pump and automatic fault-actuated switchover to standby pump

The Ext. Min function and the control input 0 – 10 V act on both pumps.

SALMSON IF MODULE FOR SINGLE AND TWIN-HEAD PUMPS

1x IF Module Siriux SBM

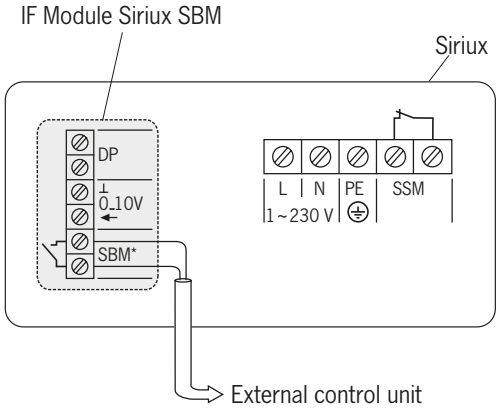

*SBM: Collective run signals, NO contact in compl. with VDI 3814
(Switch rating of vol.-free NO contact 1A, 250V~)

2x IF Module Siriux SBM

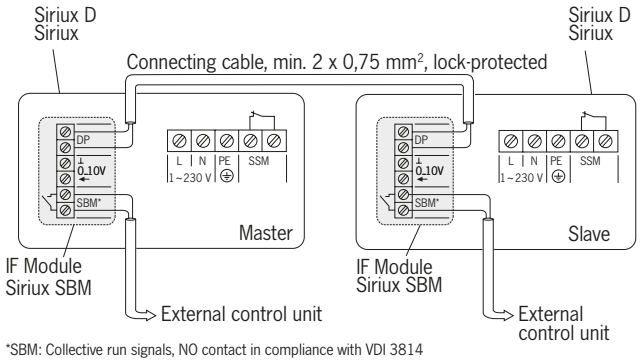

*SBM: Collective run signals, NO contact in compliance with VDI 3814

• 1 x Salmson IF Module Siriux SBM

Additional functions

– Collective run signal SBM as floating NO contact
  – Contact closed: pump operates in the specified operating mode
  – Contact open: pump is stopped
– Control input «0 - 10 V» for remote setpoint adjustment or remote speed setting
  – Remote setpoint adjustment: The setpoint value for integrated differential-pressure control is determined for the pump via an analog signal 0 - 10 V.
  – Remote speed setting: An external controller issues an actuating signal for remote speed setting (DDC operation).
  The desired function must be activated at the pump
– DP twin-head-pump interface for integrable dual-pump management of 2 single or 1 twin-head pump (see Siriux-IF-Modules for Twin-Head Pumps)

Scope of delivery

– IF-Module Stratos SBM
– EMC screwed connection Pg 9

• 2 x Salmson IF Module Siriux SBM

Functions as described at left, plus:

Double pump DP interface for the optional integration of a dual pump management system of 1 x double pump or 2 x single pumps, optionally with the following functions:

– Main/standby operation for automatic fault-actuated switchover to the standby pump and automatic pump alteration after 24 hrs running time

– Parallel operation for the efficiency-optimised activation/deactivation of the peak load pump and automatic fault-actuated switchover to standby pump

The control input 0 – 10 V acts on both pumps.

The SBM contact acts as an individual run signal for each pump.

SIRIUX MASTER

SALMSON IF MODULE FOR SINGLE AND TWIN-HEAD PUMPS

1x IF Module Siriux Ext.Off/SBM

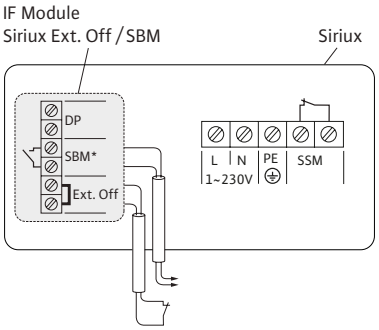

Remote control (shielded cable)
* Remote potentialfree contact
Open contact: Pump on
Closed contact: Pump "Off"
* For remote actuation, remove bridge

* SBM: Collective run signal, normally open contact according to VDI 3814

2x IF Module Siriux Ext.Off/SBM

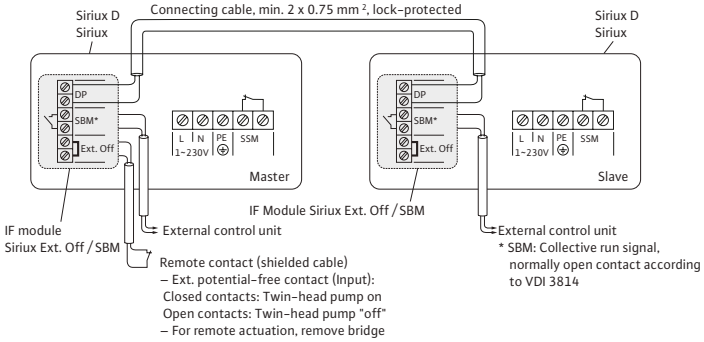

• 1 x Salmson IF Module Siriux Ext. off/SBM

Additional functions

– Input for potential-free NC contact with the Ext. Off function
  – Contact closed: Pump running in auto control mode
  – Contact open: Pump is not running.
– Collective run signal SBM as potential-free NO contact
  – Contact closed: Pump is running in the specified operating mode
  – Contact open: Pump is not running
– Double pump DP interface for integrated dual pump management of 2 x single pumps or 1 x double pump (see Siriux IF-Modules for double pumps)

Delivery status

The terminals of the «Ext. off.» control input are bridged.

Scope of delivery

– IF-Module Ext. Off/SBM
– EMC screwed connection Pg 9

• 2 x Salmson IF Module Siriux Ext. off/SBM

Functions as described at left, plus

Double pump DP interface for the optional integration of a dual pump management system of 1 x double pump or 2 x single pumps, optionally with the following functions:

– Main/standby operation for automatic fault-actuated switchover to the standby pump and automatic pump alteration after 24 hrs running time

– Parallel operation for the efficiency-optimised activation/deactivation of the peak load pump and automatic fault-actuated switchover to standby pump

The Ext Off function acts on both pumps.

The SBM contact acts as an individual run signal for each pump.

SALMSON IF MODULE FOR SINGLE AND TWIN-HEAD PUMPS

1x IF Module Siriux LON

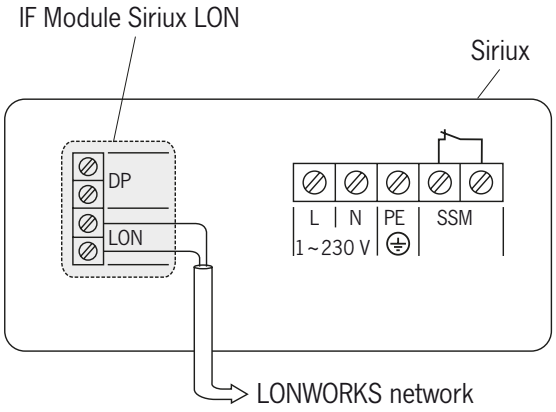

• 1 x Salmson IF Module Siriux LON

Additional functions

– Serial digital LON interface for connection to LONWORKS networks.
– Transfer of the following data items as control commands to the pump:
  – Control mode
  – Delivery head/speed setpoint
  – Pump On/Off
  – Setback operation
  – Control mode
  – Data from external sensors
  – Transfer of the following data items as signals from the pump:
    – Actual delivery head value
    – Actual volume flow value
    – Actual consumption value
    – Actual output value
    – Actual motor current value
    – Operating hours
    – Actual speed value
    – Detailed fault signals
    – Status signals

DP double pump interface (see details alongside)

Documentation to download

– LON support files:
– Download application via network: *.NXE / *.APB
– External interface files: *.XIF / *.XFB
– Device resource files: *.ENU / *.FMT / *.FPT / *.TYP
http://www.salmson.com

Scope of delivery

– IF-Module Stratos LON
– EMC screwed connection pg 7 and pg 9
– Sticker with Neuron-ID to peel off

Delivery status

The IF-Module LON is supplied as “Application unconfigured” in accordance with the LONMark Application Layer Interoperability Guidelines

1x IF Module Siriux LON (master)
1x IF Module Siriux DP (slave)

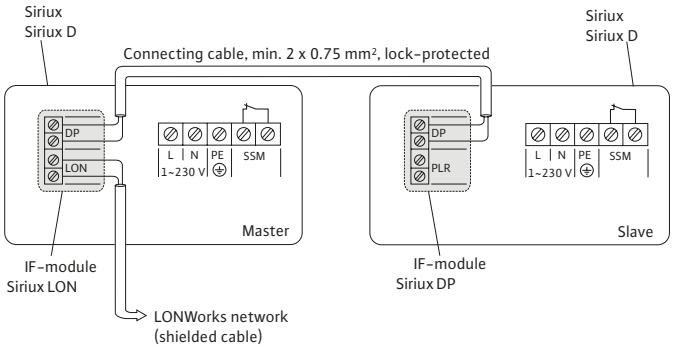

• 1 x Salmson IF Module Siriux LON (master)
• 1 x Salmson IF Module Siriux DP (slave)

Functions as described at left, plus:

Double pump DP interface for the optional integration of a dual pump management system of 1 x double pump or 2 x single pumps, optionally with the following functions:
– Main/standby operation for automatic fault-actuated switchover to the standby pump and automatic pump alteration after 24 hrs running time

– Parallel operation for efficiency-optimised activation and deactivation of the peak-load pump and automatic fault-actuated switchover to standby pump

In the LONWorks network, data items are transmitted for the double pump as a complete unit; there is no differentiation between master and slave.

SIRIUX MASTER

SALMSON IF MODULE FOR SINGLE AND TWIN-HEAD PUMPS

1x IF Module Siriux CAN

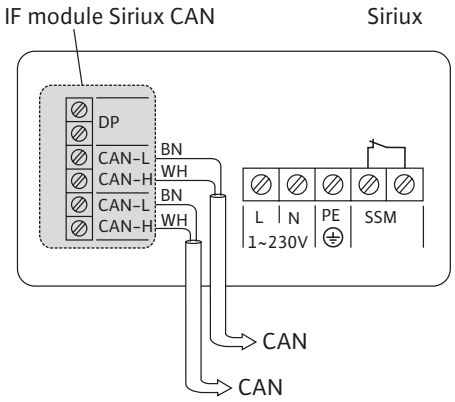

• 1 x Salmson IF Module Siriux CAN

Additional functions

Serial, digital **CANopen interface** for connection to a CAN bus system.

– Transfer of the following data items as control commands to the pump:
  – Control mode
  – Delivery head/speed setpoint
  – Pump On/Off
  – Setback operation
– Transfer of the following data items as signals from the pump:
  – Actual delivery head value
  – Actual volume flow value
  – Actual consumption value
  – Actual output value
  – Actual motor current value
  – Operating hours
  – Actual speed value
  – Detailed fault signals
  – Status signals

DP double pump interface

(see details alongside)

Documentation to download

– **CAN** specification for IF-Module
– **CANopen** .eds file

http://www.salmson.com

Scope of delivery

– IF-Module Stratos CAN
– EMC screwed connection pg 7 and pg 9
– Sticker for BUS address

1x IF Module Siriux CAN (master)

1x IF Module Siriux DP-Bus (slave)

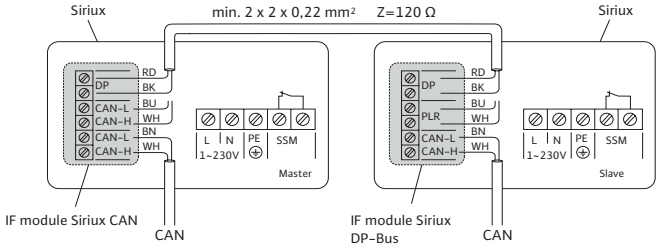

• 1 x Salmson IF Module Siriux CAN (master)

• 1 x Salmson IF Module Siriux DP-Bus (slave)

Functions as described at left, plus:

Double pump DP interface for the optional integration of a dual pump management system of 1 x double pump or 2 x single pumps, optionally with the following functions:

– Main/standby operation for automatic fault-actuated switchover to the standby pump and automatic pump alteration after 24 hrs running time

– Parallel operation for efficiency-optimised activation and deactivation of the peak-load pump and automatic fault-actuated switchover to standby pump

SALMSON IF MODULE FOR SINGLE AND TWIN-HEAD PUMPS

1x IF Module Siriux Modbus

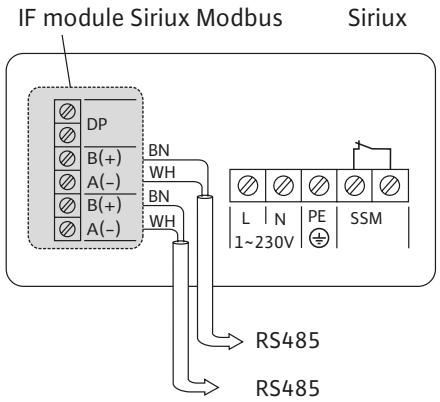

• 1 x Salmson IF Module Siriux Modbus

Additional functions

Serial, digital **Modbus RTU interface** for connection to building automation (BA) via RS485.

Transfer of the following data items as control commands to the pump:

– Control mode
– Delivery head/speed setpoint
– Pump On/Off
– Setback operation

Transfer of the following data items as signals from the pump:

– Actual delivery head value
– Actual volume flow value
– Actual consumption value
– Actual output value
– Actual motor current value
– Operating hours
– Actual speed value
– Detailed fault signals
– Status signals

DP double pump interface

(see details alongside)

Documentation to download

– Modbus specification for IF– Module
http://www.salmson.com

Scope of delivery

– IF Module Siriux Modbus
– EMC screwed connection pg 7 and pg 9
– Sticker for BUS address

1x IF Module Siriux Modbus (master)
1x IF Module Siriux DP-Bus (slave)

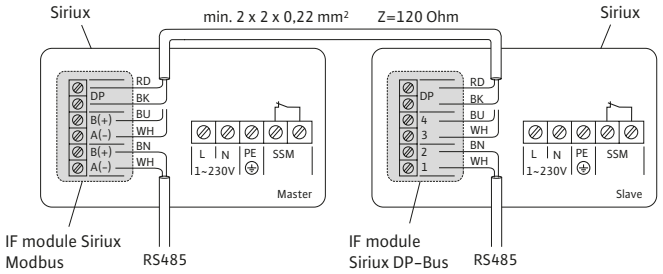

• 1 x Salmson IF Module Siriux Modbus (master)
• 1 x Salmson IF Module Siriux DP-Bus (slave)

Functions as described at left, plus:

Double pump DP interface for the optional integration of a dual pump management system of 1 x double pump or 2 x single pumps, optionally with the following functions:

– Main/standby operation for automatic fault-actuated switchover to the standby pump and automatic pump alteration after 24 hrs running time

– Parallel operation for efficiency-optimised activation and deactivation of the peak-load pump and automatic fault-actuated switchover to standby pump

SIRIUX MASTER

SALMSON IF MODULE FOR SINGLE AND TWIN-HEAD PUMPS

1x IF Module Siriux BACnet

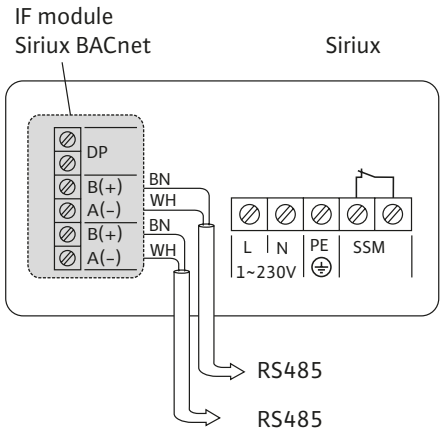

• 1 x Salmson IF Module Siriux BACnet

Additional functions

Serial, digital **BACnet MS/TP interface** for connection to building automation (BA) via RS485..

Transfer of the following data items as control commands to the pump:

– Control mode
– Delivery head/speed setpoint
– Pump On/Off
– Setback operation

Transfer of the following data items as signals from the pump:

– Actual delivery head value
– Actual volume flow value
– Actual consumption value
– Actual output value
– Actual motor current value
– Operating hours
– Actual speed value
– Detailed fault signals
– Status signals

DP double pump interface

(see details alongside)

Documentation to download

– BACnet PICS and list of data items

http://www.salmson.com

Scope of delivery

– IF Module Siriux BACnet
– EMC screwed connection pg 7 and pg 9
– Sticker for BUS address

1x IF Module Siriux BACnet (master)

1x IF Module Siriux DP-Bus (slave)

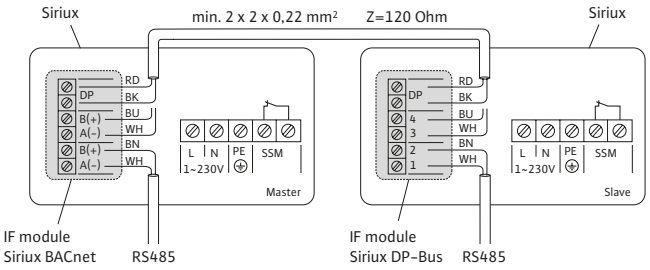

• 1 x Salmson IF Module Siriux BACnet (master)
• 1 x Salmson IF Module Siriux DP-Bus (slave)

Functions as described at left, plus:

Double pump DP interface for the optional integration of a dual pump management system of 1 x double pump or 2 x single pumps, optionally with the following functions:

– Main/standby operation for automatic fault-actuated switchover to the standby pump and automatic pump alteration after 24 hrs running time

– Parallel operation for efficiency-optimised activation and deactivation of the peak-load pump and automatic fault-actuated switchover to standby pump

MIN. SUCTION LOAD

• SIRIUX

Minimum suction head at suction port [m] for preventing cavitation at water pumping temperature

	25-30	25-40	25-60	25-65	32-30	32-40	32-60	32-65	32-65F	32-90	32-70	40-30	40-60	40-65	40-80	40-110	50-60	50-65	50-70	50-80	50-110	65-80	65-90	65-110	80-90
50°C	3	3	3	3	3	3	3	3	3	3	3	3	3	3	5	7	3	3	5	5	7	5	7	7	7
95°C	10	10	10	10	10	10	10	10	10	10	10	10	10	10	12	15	10	10	12	12	15	12	15	15	15
110°C	16	16	16	16	16	16	16	16	16	16	16	16	16	16	18	23	16	16	18	18	23	18	23	23	23

• SIRIUX D

Minimum suction head at suction port [m] for preventing cavitation at water pumping temperature

	32-60	32-70	40-60	40-80	40-110	50-60	50-70	50-80	50-110	65-90	65-110	80-90
50°C	3	3	3	5	7	3	5	5	7	5	7	7
95°C	10	10	10	12	15	10	12	12	15	12	15	15
110°C	16	16	16	18	23	16	18	18	23	18	23	23

FEATURES

a) Packaging

Threaded models: supplied with gaskets without unions.
Flanged models: supplied with flange seals and bolts, without counterflanges (optional).

b) Maintenance

Replacing of motor unit and electronic module.

RECOMMENDED ACCESSORIES

- Unions and PN 10/16 weldable round counterflanges
- Kit press 6
- Isolation valves
- IF modules
  - DP
  - SBM
  - Ext. Off
  - Ext. min.
  - LON
  - CAN
  - Ext.off/SBM
  - Modbus
  - BACnet
  - DP-Bus

SIRIUX MASTER

NOTE

OPERATING LIMITS

Flows rates up to:	**60 m³/h**
Heads up to:	**17 m CE**
Max. operating pressure:	**10 bar**
Temperature range:	**-20° to +110°C**
Max. ambient temperature:	**+40°C**
ND of ports:	**25 to 100**
EEI single pump:	**≤0,23**
EEI double pump:	**≤0,27**

The benchmark for most efficient circulators is EEI ≤ 0,20

PRIUX MASTER

SINGLE AND DOUBLE HIGH EFFICIENCY CIRCULATORS STANDARD RANGE

Heating - Air-conditioning

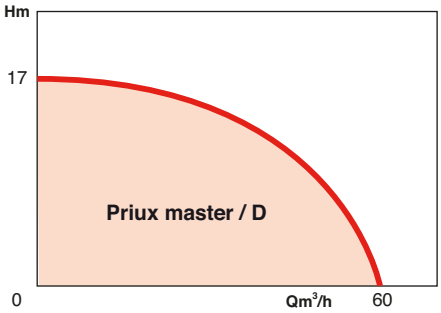

APPLICATIONS

For accelerated water circulation for heating or cooling, with optimization of circulator operating point.

- Central heating,
- Urban heating,
- Commercial or industrial installations;
- Cooling circuits.
- Air-conditioning systems
- New, old (renovated) installations or extensions.

Circulating pumps recommended for facilities fitted with thermostatic valves.

ADVANTAGES

- **Energy savings**
- **All-purpose**
- **Noise reduction**
- **Reliability**
- **Ergonomics**



ERP ENERGY-RELATED PRODUCTS CERTIFIED BY SALMSON®



PRIUX MASTER

DESIGN

• Hydraulic part

Single or double body with threaded or flanged. 3D impellers and spiral for maximum optimization of the hydraulic performances.
An impeller seal between the pump body and the impeller improves performances further by limiting the internal recycling of the fluid.
The pump body is fully cataphoresis coated to ensure corrosion resistance.

• Motor

230 V – 50 - 60 Hz single-phase
Wet rotor motor; bearing bushes lubricated by the fluid pumped.
E.C.M. (Electronically Commutated Motor) synchronous motor, equipped with a permanent magnet rotor.
The stator's rotating magnetic field is generated by the electronic switching of the coils.
This rotating field creates a continuous torque through attraction between the rotor's opposite magnetic poles, controlling its position (synchronous motor). This ensures the optimum performance of the motor, whatever its speed.
The wet rotor and the windings are separated by a composite, and therefore completely amagnetic, sleeve, to reduce motor losses.

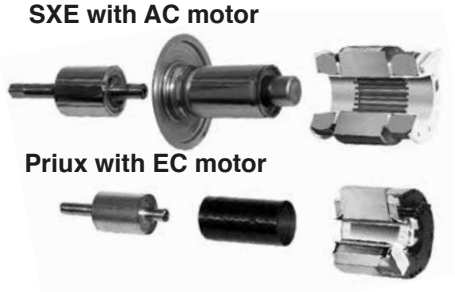

Speed:	800 to 4800 rpm
Mains voltage:	1-ph. 230 V ± 10 %
Frequency:	50 Hz - 60 Hz
Insulation class:	F (155° C)
Protection index:	IPX4D
EMC compliance:	EN 61800-3
	emission EN 61000-6-3
	immunity EN 61000-6-2

•Protection differential (FI)

«All current» FI protection differentials compliant with EN 61008-1 are permitted. These differential circuit breakers are identified by ⎍ or ⎍ ⎓.

ADVANTAGES

• Energy savings

High efficiency circulators, with optimization of the operating point. Energy savings of up to 80% compared to a traditional circulator.

• All-purpose

These circulators are compatible with all types of heating, air-conditioning and refrigeration systems. The standard version covers a fluid temperature range from –20°C to +110°C.

• Noise control

Eliminating of whistling and hydraulic noises in the thermostatic valves. Automatic adapting of speeds to the system's needs.

• Reliability

Fully automatic operation requiring neither venting nor servicing. A double filter system prevents solid particles from getting into the rotor chamber. A rotating seal between the impeller and the endshield limits water exchanges with the motor to the bare minimum.

• Ergonomics

The control module of the Priux master is freely accessible. One single button is used for the selection of the operating mode and the setting of the delivery head setpoint. A plug is used for the electrical connection. It is possible to remove the plug from the module and open it. Thus the electrical connection can be done in an easy and safe way.

Pressure gauge tappings on the flanges.

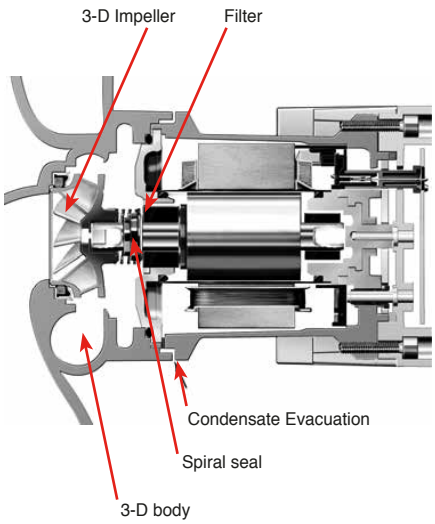

STANDARD CONSTRUCTION

Main parts	Material
Pump casing	EN GJL 250
	EN GJL 200 for ND 25-32
Impeller	Glass fibre reinforced PPS
	PPE for ND 25-32
Shaft	Chromium steel (X46 – Cr13)
Bearing bushes	Metal impregnated carbon

IDENTIFICATION

Priux master 32 - 65
Priux master D

High efficiency circulator

Single pump or D : double pump

Nominal diameter (ND) of suct/dis. flanges

Head (in dm) at nominal flow

CONNECTIONS

The electrical connection is done in the connector which can be removed from the electronic module

• **Connector**

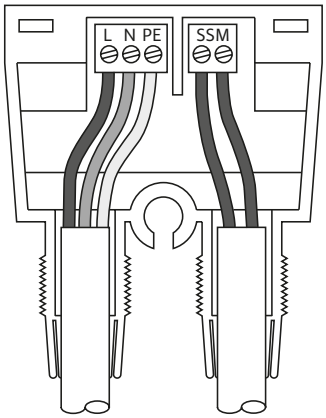

• **terminal**

L – N: mains connection, 230 V – 50 Hz-60 Hz single-phase current

PE: earth

SSM: dry contact for fault indicator (normal closed, open by default). Max load: 1 A – 250 V – AC

• **Main connection**

1~ 230 V, 50/60 Hz

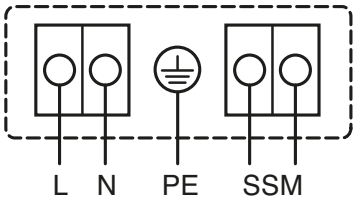

Connection to a 1~230V network

3~230 V, 50/60 Hz

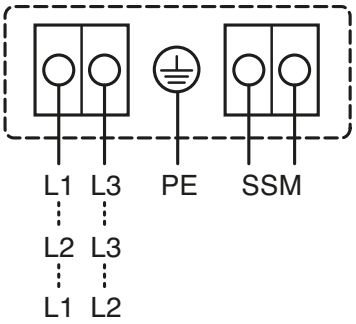

Or between two phases of a 3~230V network

POSSIBLE ASSEMBLY

On vertical or horizontal pipes the motor shaft must always be horizontal.

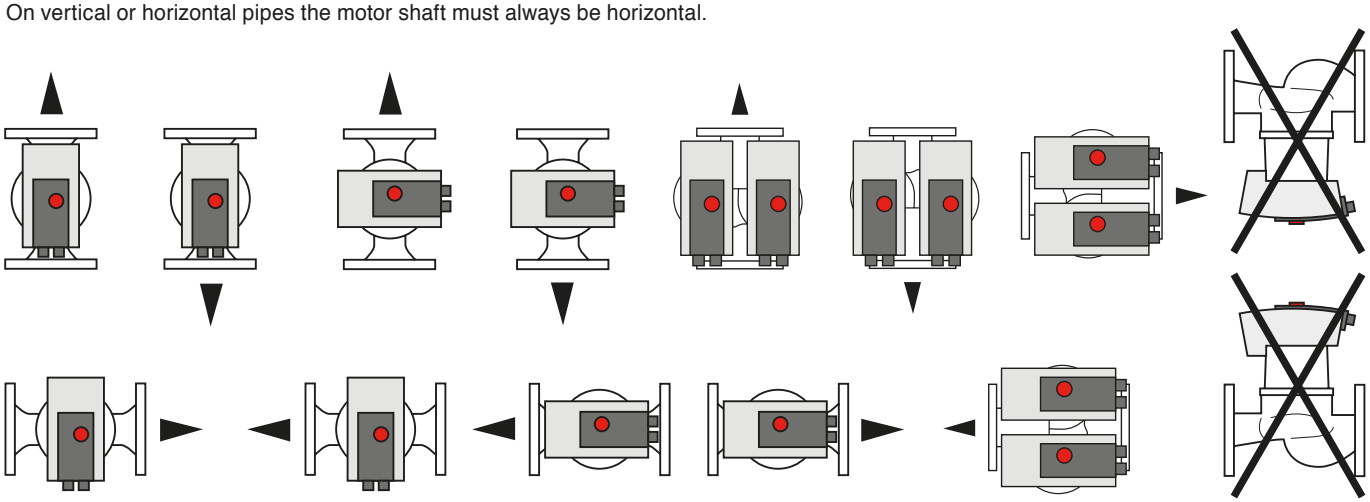

PRIUX MASTER

OPERATING PRINCIPLE

The heating or air-conditioning needs of a building vary according to whether it is day or night, but also during the day according to changes in the outside temperature, etc., and even from one point of the building to another as the thermostatic valves or 2-way valves are closed. The self-regulated circulator automatically adjusts its rotation speed according to the mains network's friction losses, in order to maintain a minimum electricity consumption (ECM technology) and a low operating noise level. The circulator's properties are adjusted automatically according to the heating or cooling needs of the system.

• Manual adjustment
Parameterization of basic functions, i.e.:
- control mode ΔP constant ΔP variable
- pressure setpoint adjustment
- speed selection.

• Constant pressure
With this regulation mode, electronic control maintains the constant differential pressure of the circulating pump whatever the flow rate, depending on the predefined pressure value.

• Variable pressure
With this regulation mode, the electronic control allows reducing the differential pressure (manometric head) in case of flow reduction, depending on the predefined differential pressure value.

• Speed selection (rated power P2≥600W)
The rotation speed can be adjusted manually on 3 predefined constant values (depending on models).

• Remote monitoring (SSM)
In addition, a dry contact (open by default) allows the remote monitoring of any operating incident (e.g. through a building management system).

• Double circulators (or two single pumps installed in parallel)
The Duty/Stand-by operation mode is allowed.
For an automatic fault-actuated switchover, a switchgear using the collective fault signal available on the pump (SSM) is required on site. Parallel operation is not permissible, since the pumps can interfere with each other's operating behaviour.

OPERATING PRINCIPLE

ΔP Constant Mode

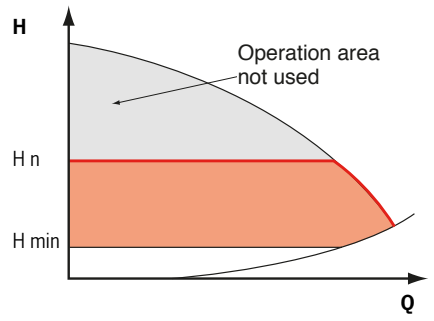

Electronic module maintains constant the differential pressure produced by the pump at the differential pressure value of Hn instruction, up to the curve of operating data through the authorized flow rating.

ΔP Variable Mode

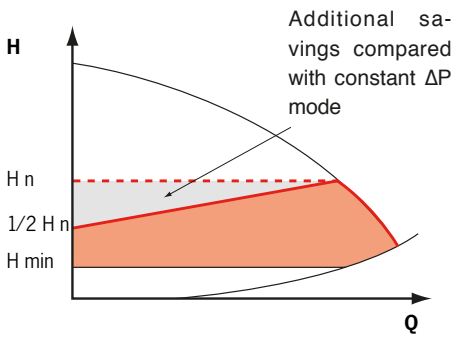

Electronic module modifies linearly the differential pressure value between Hn and 1/2 Hn instruction to be met by the pump. Differential pressure value of H instruction increases or decreases acc. to the requested flow rate.

TABLE OF FUNCTIONS

	Priux master	Priux master-D
Operating modes		
Speed selection (n = constant)	P2≥600W	P2≥600W
Δp-c for constant differential pressure	•	•
Δp-v for variable differential pressure	•	•
Manual functions		
Adjustment of operating mode	•	•
Adjustment of differential-pressure setpoint	•	•
Adjustment of speed (manual setting mode)	3 predefined values	3 predefined values
Automatic functions		
Smooth adjustment of power depending on the operating mode	•	•
Deblocking function	•	•
Soft start	•	•
Full motor protection with integrated trip electronics	•	•
Signal and display functions		
Collective fault signal (potential free NC contact)	•	•
Fault light	•	•
7 segments LED display for showing pressure setpoint and fault codes	•	•
Dual pump management (double pumps or 2 x single pumps)		
Main/standby pump operation	switchgear required on site	switchgear required on site
Parallel operation	—	—
Equipment / scope of delivery		
Wrench attachment point on pump body	Threaded types with P2 < 200 W	—
Double changeover valve in pump housing	—	•
Cable entry possible on both sides	—	—
Integrated air separator for automatic rapid ventilation Rp 3/8	—	—
Plug-in slot for optional extension with SALMSON IF modules	—	—
Blocking-current-proof motor	—	—
Incl. seals for threaded connection or flanges (loose)	•	•
Incl. installation and operating instructions	•	•
Heat insulation	accessory in option	—
Incl. washers and bolts for flanges (for DN 32 - DN 100 nominal connection diameters)	•	•
Particle filter	•	•

• = available ; — = not available

PRIUX MASTER

TECHNICAL DATA - PRIUX MASTER

	25-55	25-65	25-90	32-55	32-65	32-90	40-30	40-60	40-80	40-110	50-60	50-70	50-80	50-110	65-80	65-90	65-110	80-40	80-90	100-90
Approved fluids (other fluids on request)																				
Heating water (as per VDI 2035)										•										
Water/glycol-mixtures (max. 50%; mixtures with more than 20 % glycol content require rechecking of the pumping data)										•										
Drinking water and water for food businesses in accordance with TrinkwV 2001										—										
Performance																				
Max. delivery head [m]	7	10	12	7	10	12	5	8	12	17	8	9	11	16	9		17	7	13	13
Flow rate max. [m³/h]	7	8	11	7	8	11	11	14	19	29	14	24	28	44	28		56	45	63	63
Permitted field of application																				
Temperature range when used in heating, ventilation & air conditioning systems - at max. ambient temperature +40 °C [°C]										-20 to +110										
Temperature range for use in drinking-water circulation systems																				
- at max. ambient temperature +40 °C [°C]										—										
- at max. ambient temperature +40 °C in short-term operation 2 h [°C]										—										
Max. permissible total hardness in drinking watercirculation systems [°d]										—										
Standard version with nominal pressure, p max [bar]										6/10										
Pipe connections																				
Pipe connection Rp	1	1	1	1 1/4	1 1/4	1 1/4														
Nominal diameter DN							40	40	40	40	50	50	50	50	65	65	65	80	80	100
Flange for mating flange PN 10, standard version	—	—	—	—	—	—	—	—	—	—	—	—	—	—	—	—	—	•	•	•
Combination flange PN 6/10 for mating flanges PN 6 and PN 16, standard version	—	—	—	—	—	—	•	•	•	•	•	•	•	•	•	•	•	—	—	—
Electrical connection																				
Mains supply connection 1~ [V], standard version										230										
Mains suppply connection 3 ~ [V], standard version										230										
Mains supply connection 3 ~ [V], with optional switching plug										—										
Mains frequency [Hz]										50/60										
Motor/electronics																				
Electromagnetic compatibility										EN 61800-3										
Emitted interference										EN 61000-6-3										
Immunity to interference										EN 61000-6-2										
Power electronics										Frequency converter										
Protection class										IPX4D										
Insulation class										F										

• = available ; — = not available

TECHNICAL DATA - PRIUX MASTER-D

	32-55	32-90	40-60	40-80	40-110	50-70	50-80	50-110	65-90	65-110	80-90
Approved fluids (other fluids on request)											
Heating water (as per VDI 2035)						•					
Water/glycol-mixtures (max. 50%; mixtures with more than 20 % glycol content require rechecking of the pumping data)						•					
Drinking water and water for food businesses in accordance with TrinkwV 2001						—					
Performance											
Max. delivery head [m]	7	9	8	12	17	9	11	16		17	13
Flow rate max. [m³/h]	6,5	12	13,5	17	27	19	22	38		53	60
Permitted field of application											
Temperature range when used in heating, ventilation & air conditioning systems - at max. ambient temperature +40 °C [°C]						-20 to +110					
Temperature range for use in drinking-water circulation systems											
- at max. ambient temperature +40 °C [°C]						—					
- at max. ambient temperature +40 °C in short-term operation 2 h [°C]						—					
Max. permissible total hardness in drinking watercirculation systems [°d]						—					
Standard version with nominal pressure, p max [bar]						6/10					
Pipe connections											
Pipe connection Rp						—					
Nominal diameter DN	32	32	40	40	40	50	50	50	65	65	80
Flange for mating flange PN 10, standard version	—	—	—	—	—	—	—	—	—	—	•
Combination flange PN 6/10 for mating flanges PN 6 and PN 16, standard version	•	•	•	•	•	•	•	•	•	•	—
Electrical connection											
Mains supply connection 1~ [V], standard version						230					
Mains suppply connection 3 ~ [V], standard version						230					
Mains supply connection 3 ~ [V], with optional switching plug						—					
Mains frequency [Hz]						50/60					
Motor/electronics											
Electromagnetic compatibility						EN 61800-3					
Emitted interference						EN 61000-6-3					
Immunity to interference						EN 61000-6-2					
Power electronics						Frequency converter					
Protection class						IPX4D					
Insulation class						F					

• = available ; — = not available

PRIUX MASTER

HYDRAULIC PERFORMANCES - PRIUX MASTER

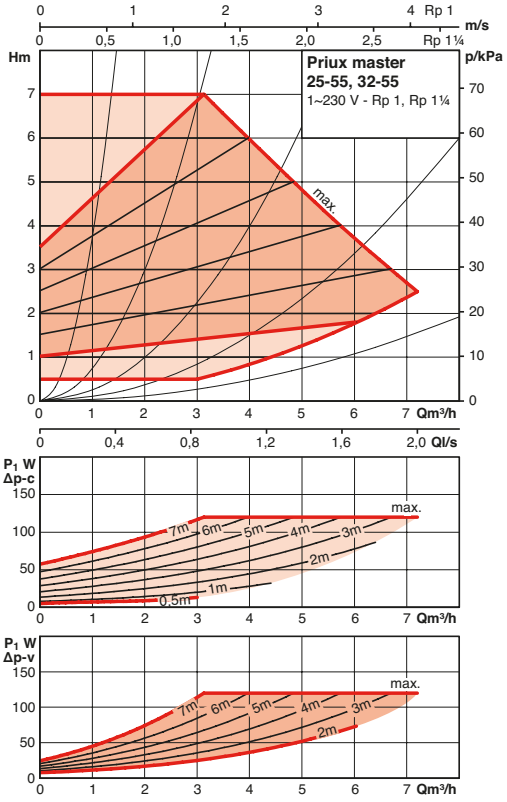

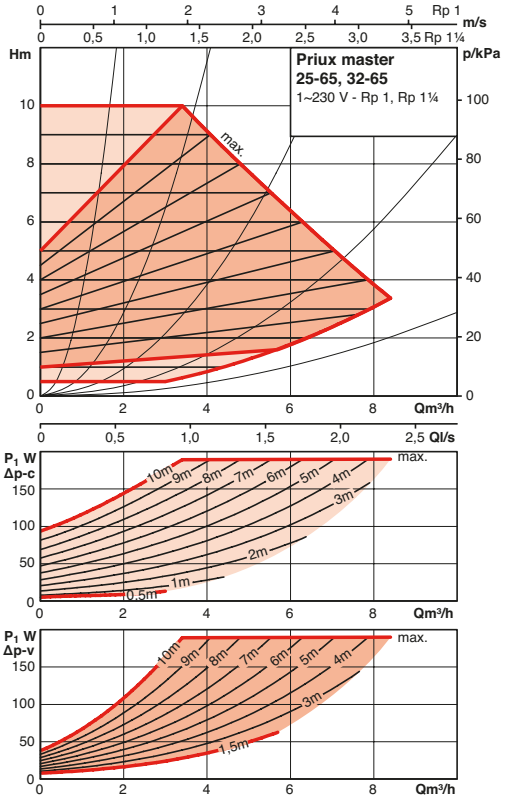

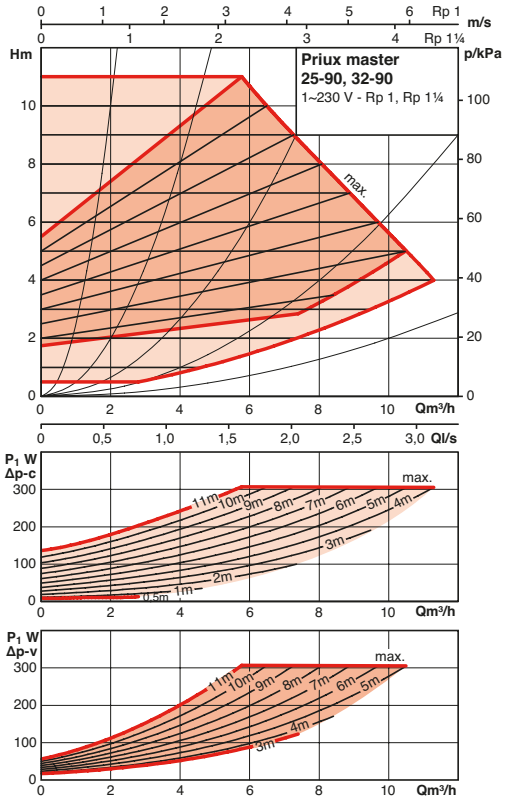

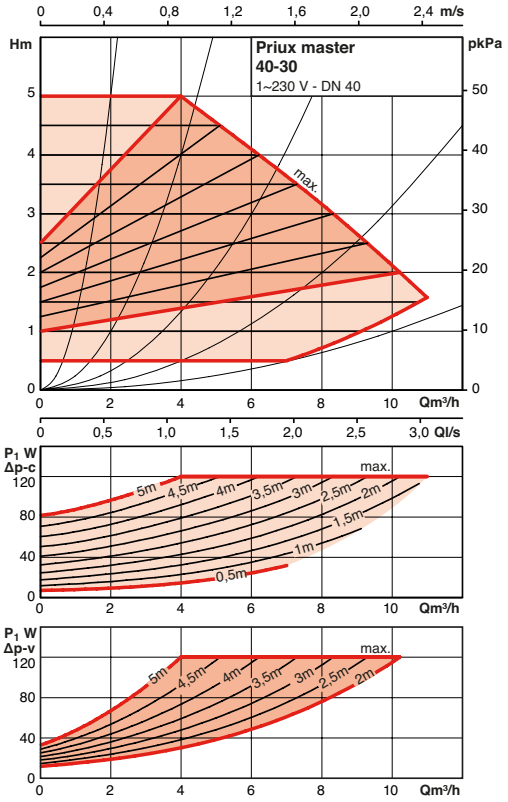

HYDRAULIC PERFORMANCES - PRIUX MASTER

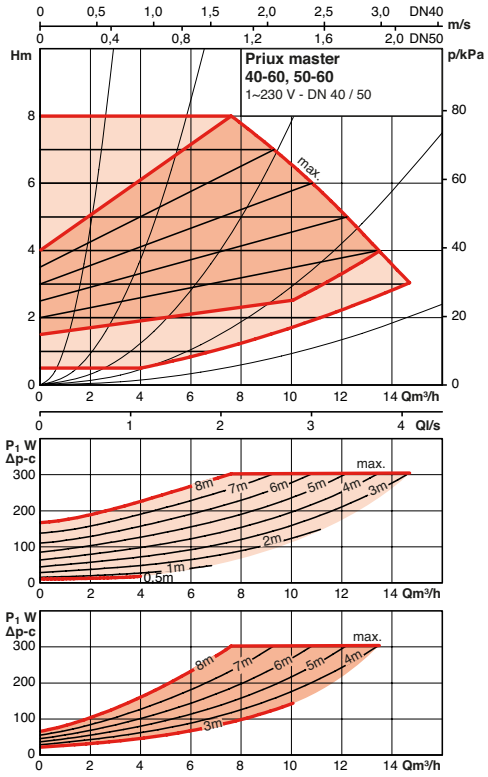

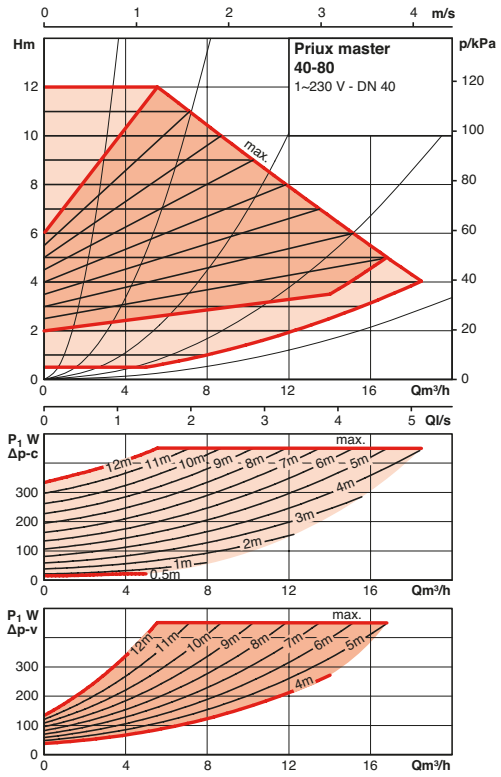

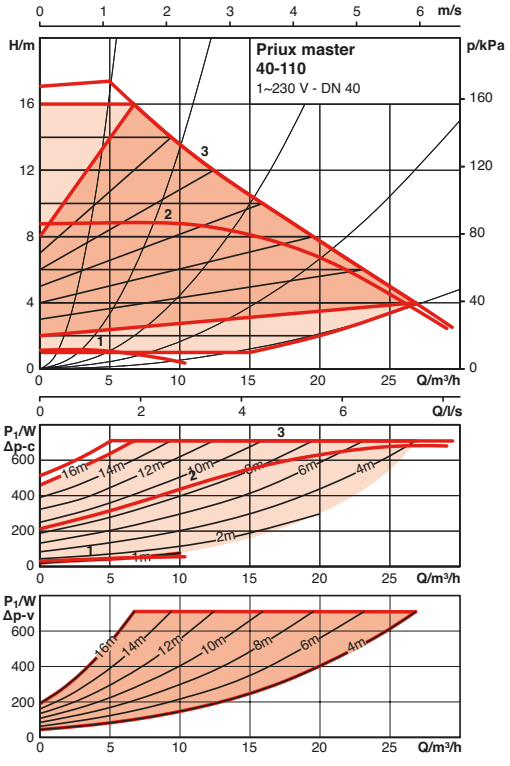

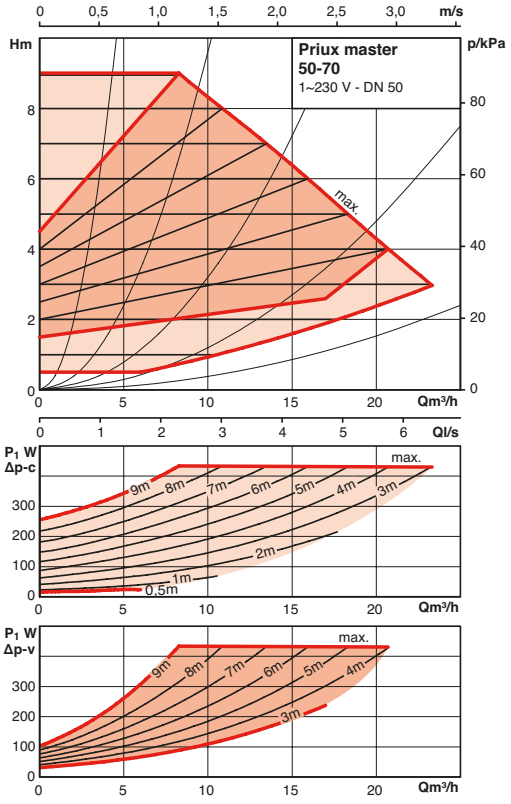

PRIUX MASTER

HYDRAULIC PERFORMANCES - PRIUX MASTER

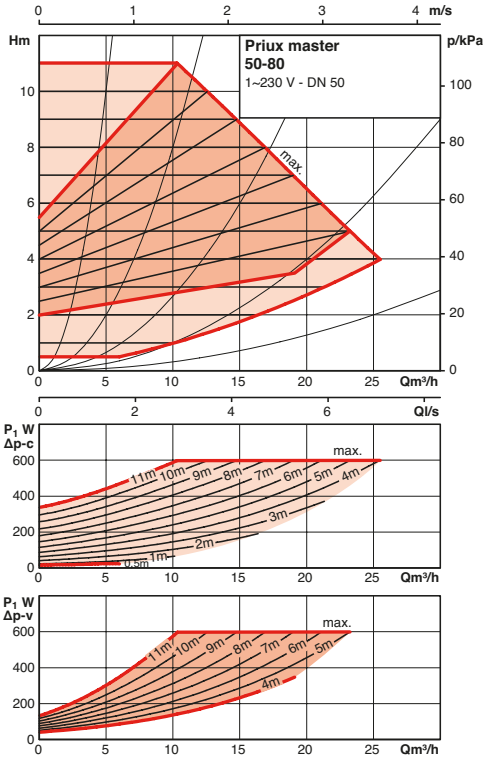

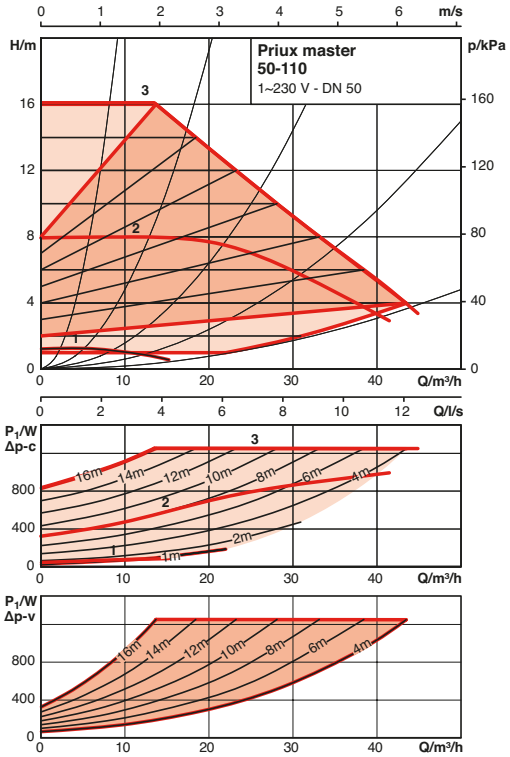

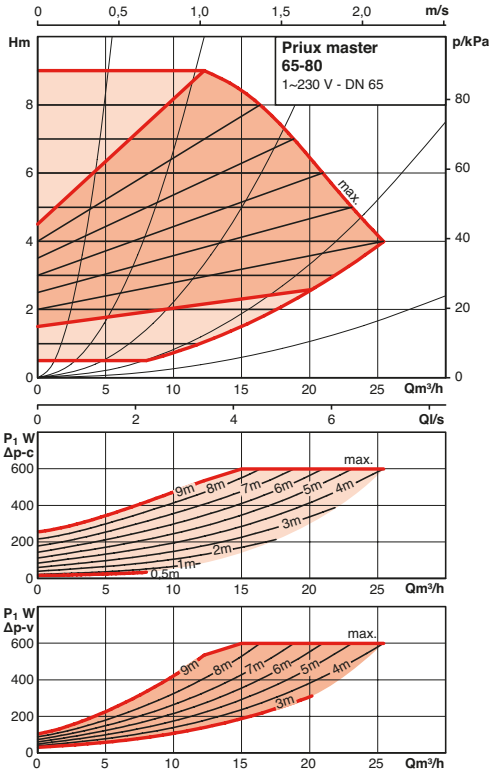

Priux master 65-90
Data available in the course 2015.
Please check our electronic documentation which is available on our website :
www.salmson.com

HYDRAULIC PERFORMANCES - PRIUX MASTER

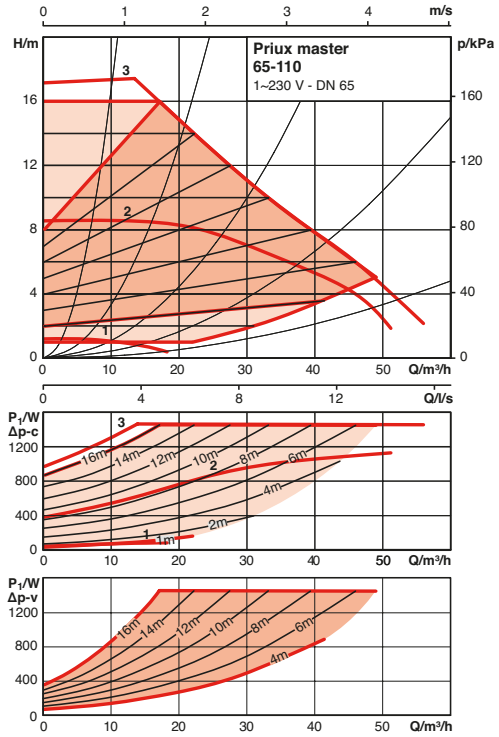

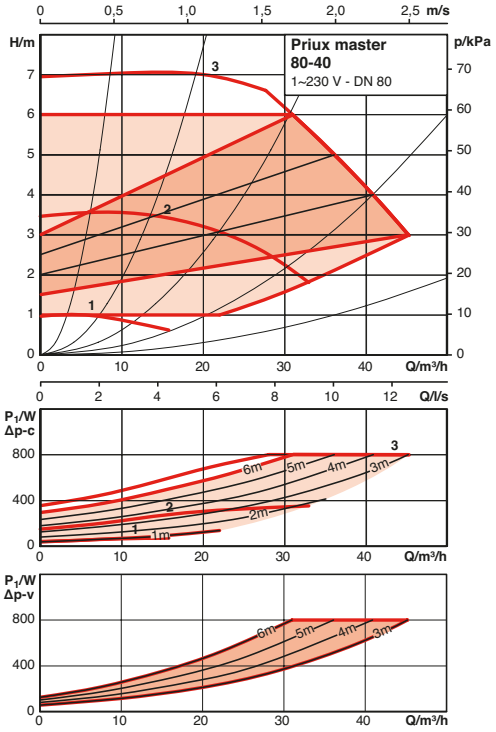

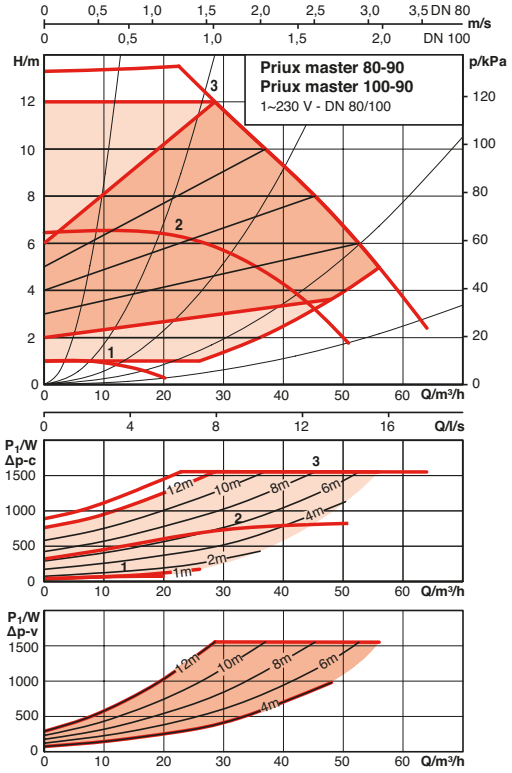

PRIUX MASTER

HYDRAULIC PERFORMANCES - PRIUX MASTER-D

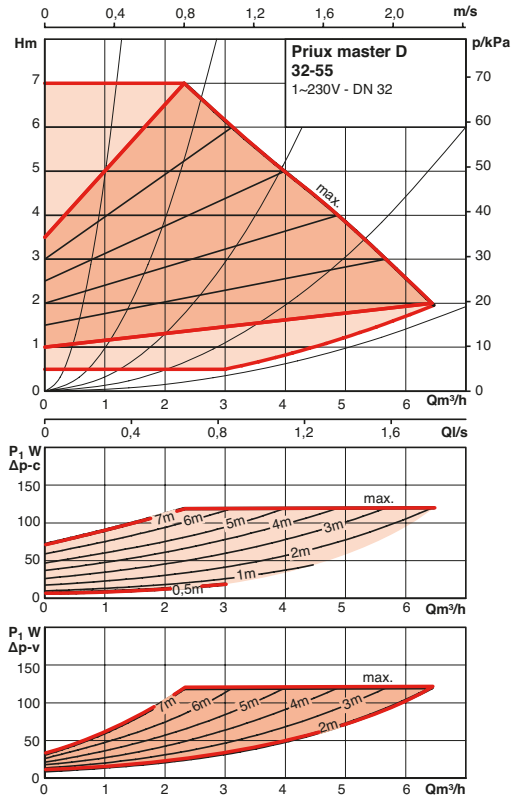

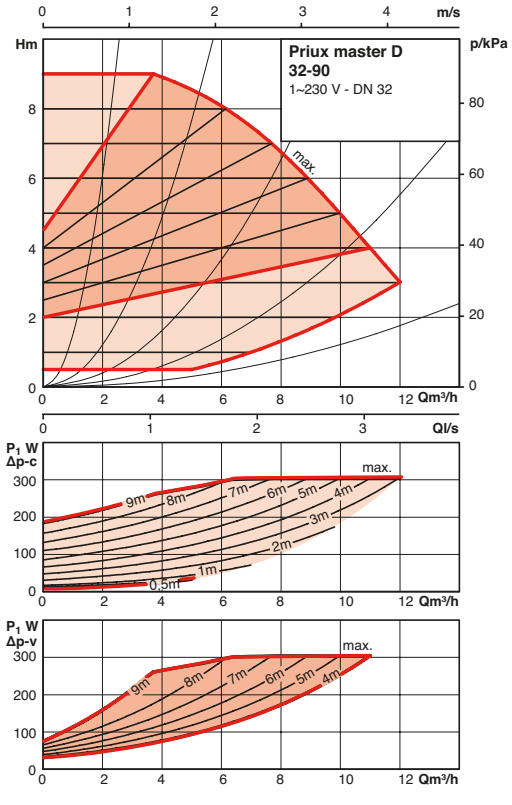

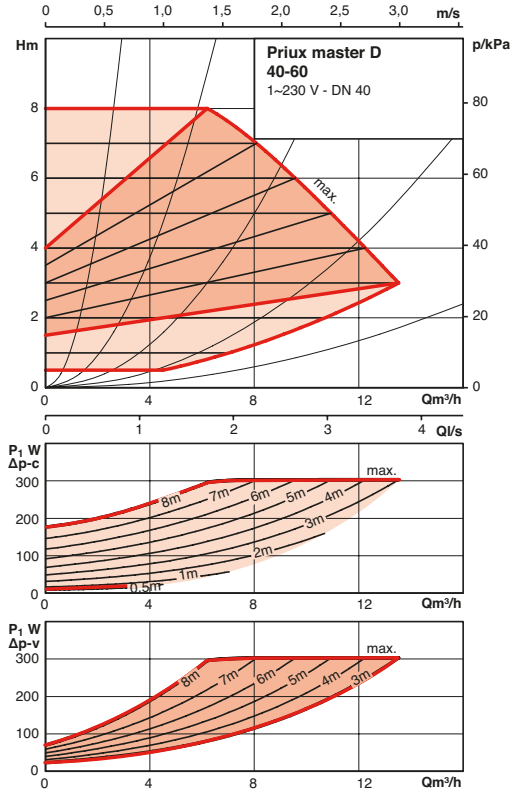

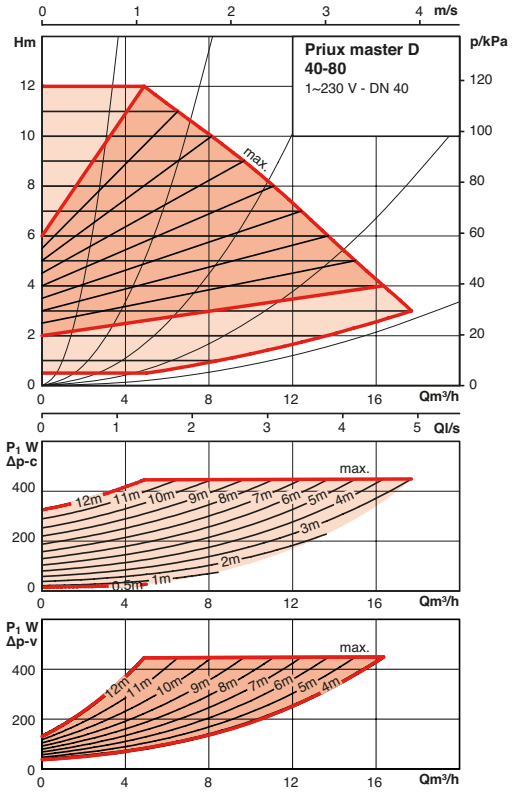

HYDRAULIC PERFORMANCES - PRIUX MASTER-D

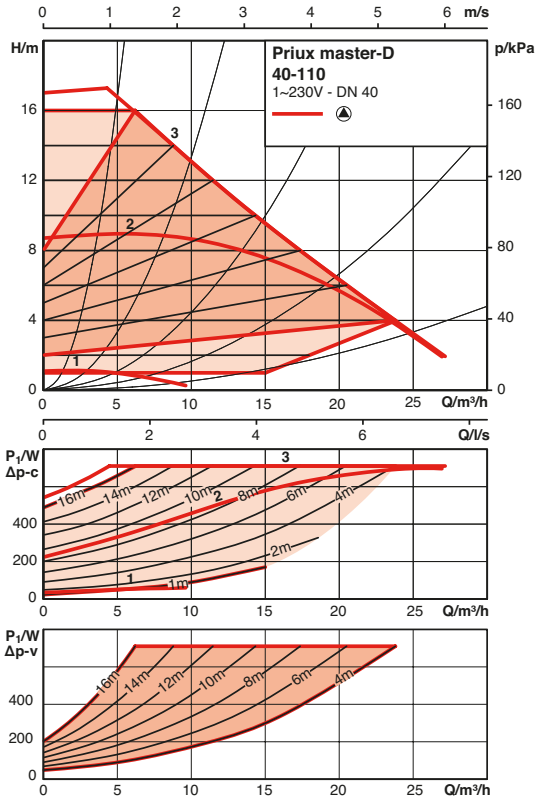

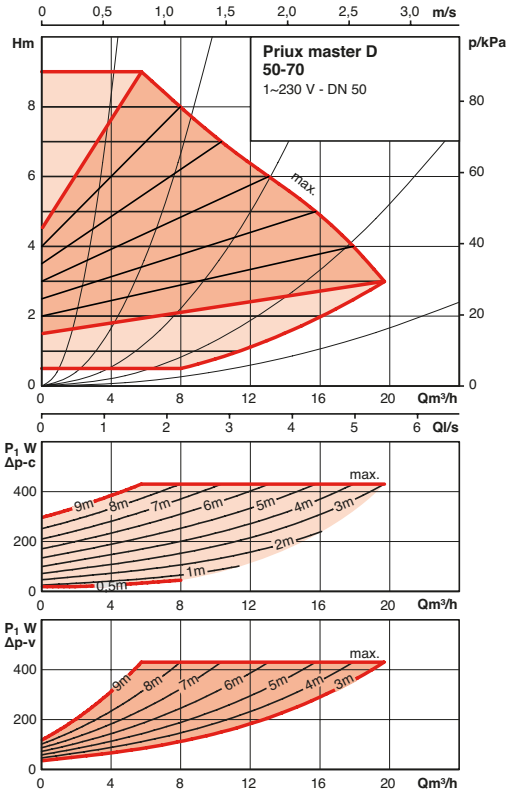

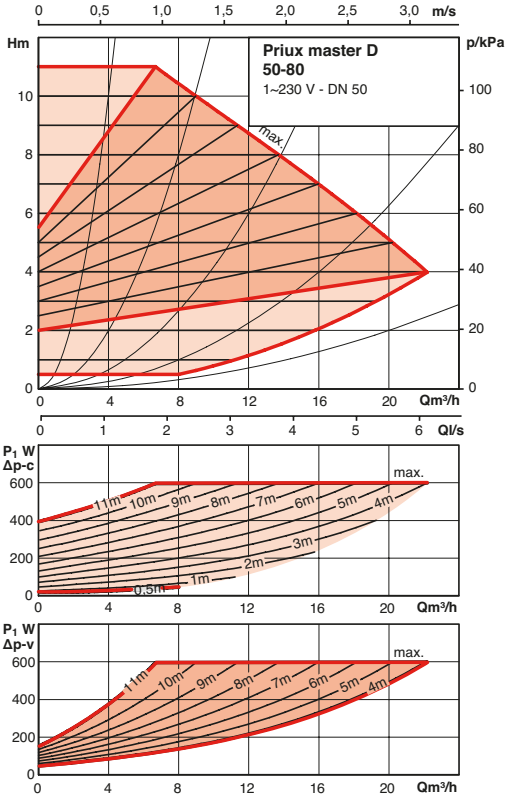

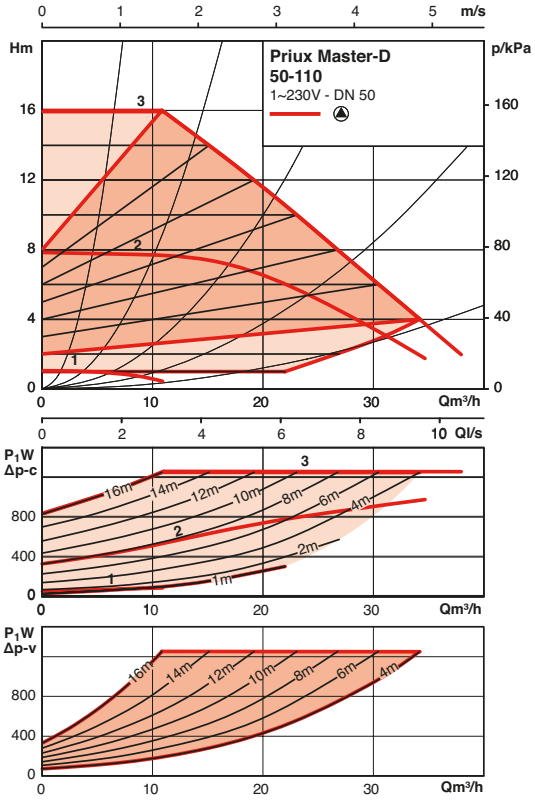

PRIUX MASTER

HYDRAULIC PERFORMANCES - PRIUX MASTER-D

Priux master-D 65-90
Data available in the course 2015.
Please check our electronic documentation which is available on our website :
www.salmson.com

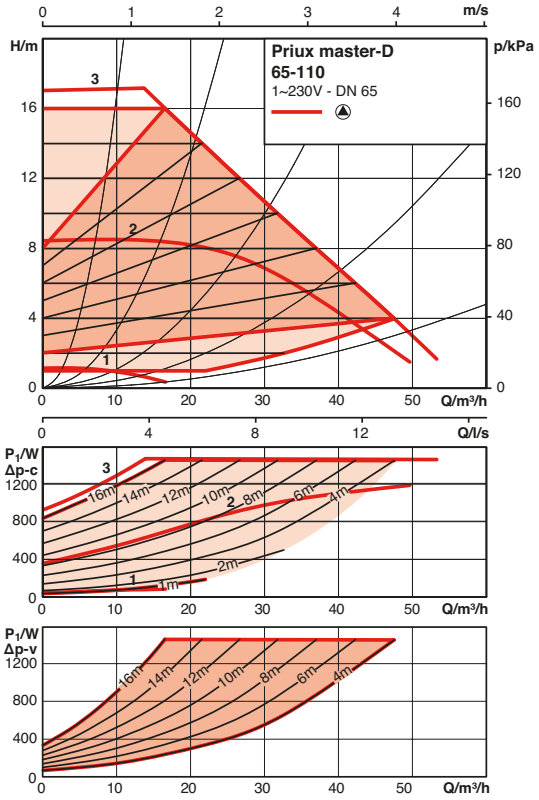

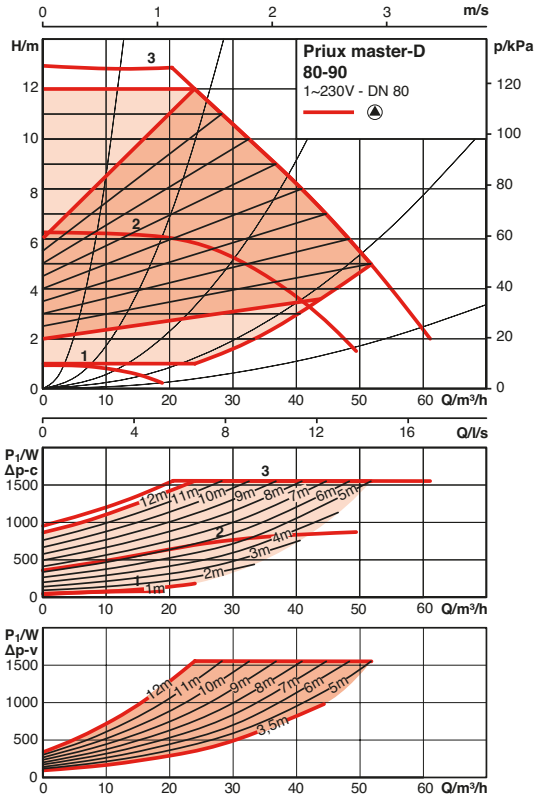

MOTOR DATA - PRIUX MASTER

	Rated power	Speed	Power consumption	Current at 1~230V	Current at 3~230V	Motor protection	Pg thread connection
	P2 [W]	n [1/min]	P1 [W]	I [A]			
25-55	90	1000-3700	5-120	0,08-0,9	0,08-0,9	integrated	2xM20
25-65	140	1000-4400	5-190	0,08-1,3	0,08-1,3	integrated	2xM20
25-90	200	1000-4800	10-305	0,15-1,33	0,15-1,33	integrated	2xM20
32-55	90	1000-3700	5-120	0,08-0,9	0,08-0,9	integrated	2xM20
32-65	140	1000-4400	5-190	0,08-1,3	0,08-1,3	integrated	2xM20
32-90	200	1000-4800	10-305	0,15-1,33	0,15-1,33	integrated	2xM20
40-30	90	1200-3700	7-120	0,09-0,9	0,09-0,9	integrated	2xM20
40-60	200	1200-4800	10-305	0,15-1,33	0,15-1,33	integrated	2xM20
40-80	350	950-4500	15-450	0,17-2,0	0,17-2,0	integrated	2xM20
40-110	600	800-3500	25-710	0,25-3,15	0,25-3,15	integrated	2xM20
50-60	200	1200-4800	10-305	0,15-1,33	0,15-1,33	integrated	2xM20
50-70	350	950-4000	15-430	0,17-1,88	0,17-1,88	integrated	2xM20
50-80	500	950-4400	15-600	0,17-2,65	0,17-2,65	integrated	2xM20
50-110	1050	800-3300	40-1250	0,30-5,50	0,30-5,50	integrated	2xM20
65-80	500	950-4000	15-600	0,17-2,65	0,17-2,65	integrated	2xM20
65-90*							
65-110	1200	800-3400	40-1450	0,30-6,40	0,30-6,40	integrated	2xM20
80-40	650	900-2400	40-800	0,30-3,50	0,30-3,50	integrated	2xM20
80-90	1300	930-300	40-1550	0,30-6,80	0,30-6,80	integrated	2xM20
100-90	1300	930-300	40-1550	0,30-6,80	0,30-6,80	integrated	2xM20

*Data available in the course 2015. Please check our electronic documentation which is available on our website : www.salmson.com

MOTOR DATA - PRIUX MASTER - D

	Rated power	Speed	Power consumption	Current at 1~230V	Current at 3~230V	Motor protection	Pg thread connection
	P2 [W]	n [1/min]	P1 [W]	I [A]			
32-55	90	1000-3700	5-120	0,08-0,9	0,08-0,9	integrated	2xM20
32-90	200	1000-4800	10-305	0,15-1,33	0,15-1,33	integrated	2xM20
40-60	200	1200-4800	10-305	0,15-1,33	0,15-1,33	integrated	2xM20
40-80	350	950-4500	15-450	0,17-2,00	0,17-2,00	integrated	2xM20
40-100	600	800-3500	25-710	0,25-3,15	0,25-3,15	integrated	2xM20
50-70	350	950-4000	15-430	0,17-1,88	0,17-1,88	integrated	2xM20
50-80	500	950-4400	15-600	0,17-2,65	0,17-2,65	integrated	2xM20
50-110	1050	800-3300	40-1250	0,30-5,50	0,30-5,50	integrated	2xM20
65-90*							
65-110	1200	800-3400	40-1450	0,30-6,40	0,30-6,40	integrated	2xM20
80-90	1300	930-300	40-1550	0,30-6,80	0,30-6,80	integrated	2xM20

*Data available in the course 2015. Please check our electronic documentation which is available on our website : www.salmson.com

PRIUX MASTER

DIMENSIONS - PRIUX MASTER

Drawing A

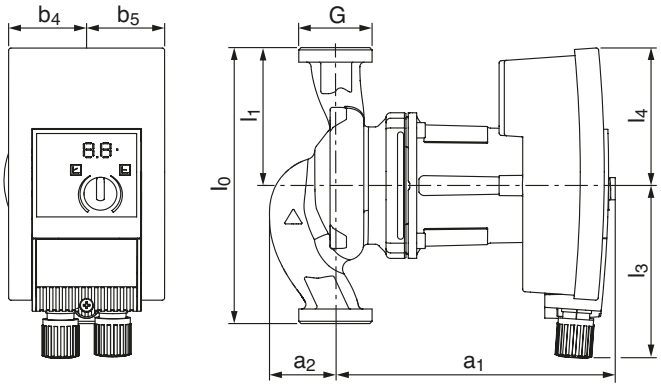

Drawing B

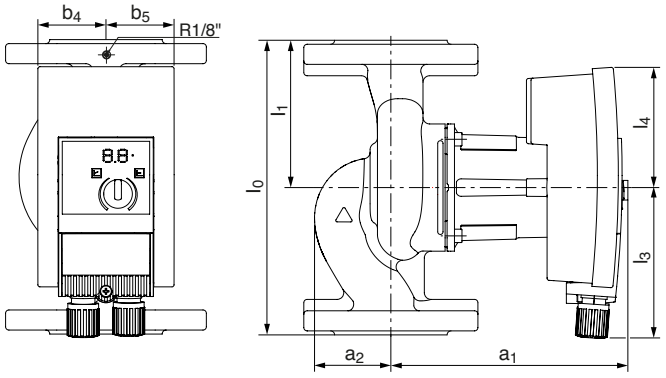

	Nominal Diameter	Pipe diameter	Threaded	a1	a2	b4	b5	l0	l1	l3	l4	Weight	Drawing
	DN	Rp	G	mm	mm	mm	mm	mm	mm	mm	mm	kg	-
25-55	—	1	1 1/2	183	44	51	51	180	90	113	90	4,5	A
25-65	—	1	1 1/2	183	44	51	51	180	90	113	90	4,5	A
25-90	—	1	1 1/2	248	47	64	64	180	90	135	98	5,3	A
32-55	—	1 1/4	2	183	44	51	51	180	90	113	90	4,6	A
32-65	—	1 1/4	2	183	44	51	51	180	90	113	90	4,6	A
32-90	—	1 1/4	2	248	47	64	64	180	90	135	98	5,4	A
40-30	40	—	—	178	57	51	51	220	110	113	90	8,6	B
40-60	40	—	—	253	48	64	64	220	110	135	98	9,2	B
40-80	40	—	—	318	64	71	71	250	125	152	109	13	B
40-110	40	—	—	323	62	87	87	250	125	160	169	21	B
50-60	50	—	—	356	46	64	64	240	120	135	98	10,5	B
50-70	50	—	—	321	53	71	71	280	140	152	109	14,2	B
50-80	50	—	—	321	53	71	71	280	140	152	109	14,2	B
50-110	50	—	—	325	66	87	87	340	170	160	169	25	B
65-80	65	—	—	330	57	71	71	280	140	152	109	16,1	B
65-90	65	—	—	337	70	87	87	340	170	160	169	25,8	B
65-110	65	—	—	332	66	87	87	340	170	160	169	27,5	B
80-40	80	—	—	333	84	87	87	360	180	160	169	29	B
80-90	80	—	—	333	84	87	87	360	180	160	169	30,4	B
100-90	100	—	—	345	85	87	87	360	180	160	169	33,4	B

FLANGES - PRIUX MASTER

Drawing C

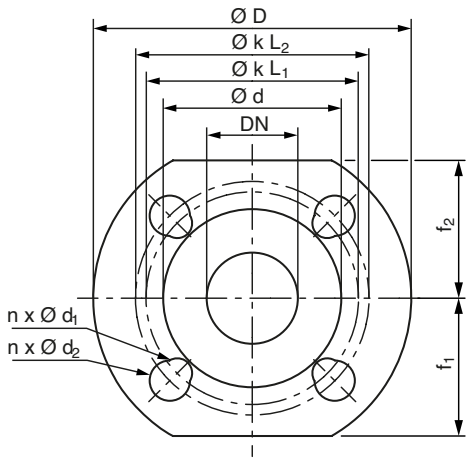

Drawing D

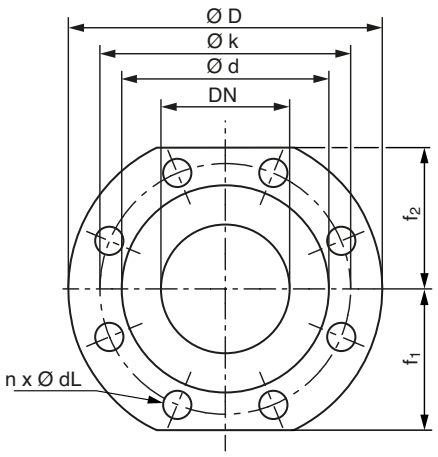

	Flange	Nominal dia.	Pump flange dimensions								Drawing
	-	DN	D	d	KL1/KL2	Dia. k	n x d1/d2	n x dL	f1	f2	-
	[-]	[-]	[mm]				[pcs. x mm]		[mm]		[-]
40-30	Combination flange PN6/10 (flange PN 16 according to EN 1092-2)	40	150	84	100/110	–	4 x 14 / 19	-	65	65	C
40-60	Combination flange PN6/10 (flange PN 16 according to EN 1092-2)	40	150	84	100/110	–	4 x 14 / 19	-	65	65	C
40-80	Combination flange PN6/10 (flange PN 16 according to EN 1092-2)	40	150	84	100/110	–	4 x 14 / 19	-	65	65	C
40-110	Combination flange PN6/10 (flange PN 16 according to EN 1092-2)	40	150	84	100/110	–	4 x 14 / 19	-	65	65	C
50-60	Combination flange PN6/10 (flange PN 16 according to EN 1092-2)	50	165	99	110/125	–	4 x 14 / 19	-	70	70	C
50-70	Combination flange PN6/10 (flange PN 16 according to EN 1092-2)	50	165	99	110/125	–	4 x 14 / 19	-	70	70	C
50-80	Combination flange PN6/10 (flange PN 16 according to EN 1092-2)	50	165	99	110/125	–	4 x 14 / 19	-	70	70	C
50-110	Combination flange PN6/10 (flange PN 16 according to EN 1092-2)	50	165	99	110/125	–	4 x 14 / 19	-	70	70	C
65-80	Combination flange PN6/10 (flange PN 16 according to EN 1092-2)	65	185	118	130/145	–	4 x 14 / 19	-	80	80	C
65-90	Combination flange PN6/10 (flange PN 16 according to EN 1092-2)	65	185	118	130/145	–	4 x 14 / 19	-	80	80	C
65-110	Combination flange PN6/10 (flange PN 16 according to EN 1092-2)	65	185	118	130/145	–	4 x 14 / 19	-	80	80	C
80-40	Flange PN10 (flange PN 16 according to EN 1092-2)	80	200	132	–	160	–	8 x 19	90	90	D
80-90	Flange PN10 (flange PN 16 according to EN 1092-2)	80	200	132	–	160	–	8 x 19	90	90	D
100-90	Flange PN10 (flange PN 16 according to EN 1092-2)	100	220	156	–	180	–	8 x 19	100	100	D

PRIUX MASTER

DIMENSIONS - PRIUX MASTER - D

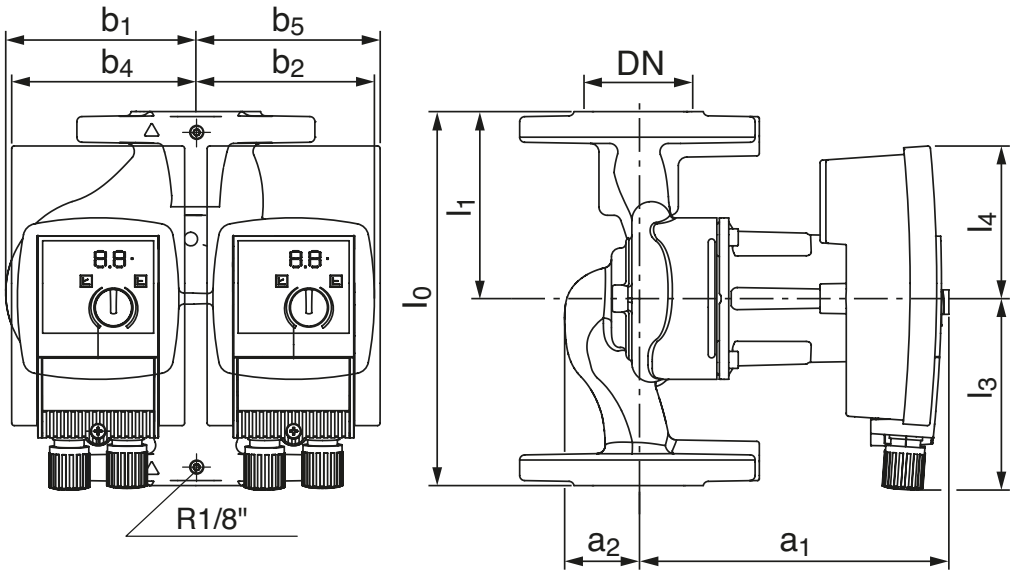

	Nominal Diameter	Pipe diameter	Threaded	a1	a2	b1	b2	b4	b5	l0	l1	l3	l4	Weight
	DN	–	–	mm	mm	mm	mm	mm	mm	mm	mm	mm	mm	kg
32-55	32	–	–	183	47	112	106	109	109	220	110	113	90	10,4
32-90	32	–	–	267	57	112	105	119	139	220	110	135	98	17,1
40-60	40	–	–	269	64	125	138	124	144	220	110	135	98	17,5
40-80	40	–	–	329	62	151	144	151	151	250	125	152	109	24,0
40-110	40	–	–	323	65	192	192	197	197	250	125	160	169	42,8
50-70	50	–	–	333	62	159	148	151	151	280	140	152	109	26,4
50-80	50	–	–	333	62	159	148	151	151	280	140	152	109	26,0
50-110	50	–	–	318	70	201	192	197	197	340	170	160	169	47,2
65-90	65	–	–	337	88	209	196	197	197	340	170	160	169	50,7
65-110	65	–	–	323	80	209	196	197	197	340	170	160	169	50,2
80-90	80	–	–	342	100	235	221	212	212	360	180	160	169	56,6

FLANGES - PRIUX MASTER - D

Drawing E

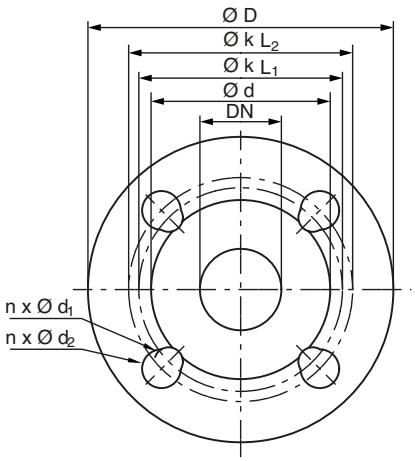

Drawing F

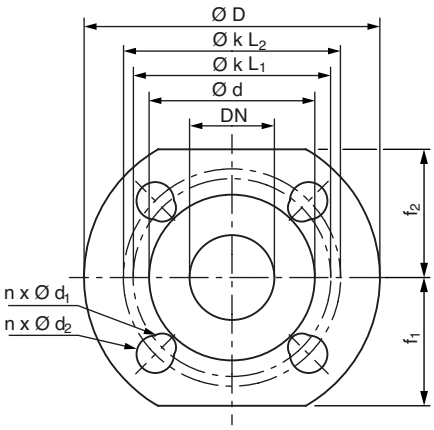

Drawing G

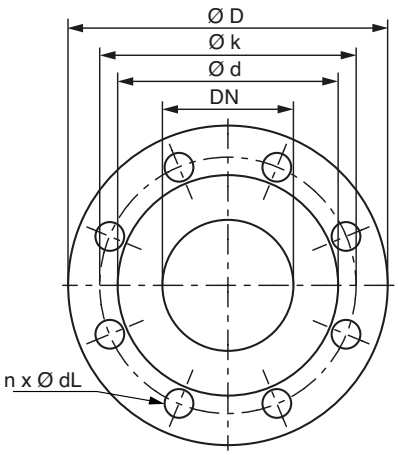

	Flange	Nominal dia.	Pump flange dimensions								Dimension drawing
	-	DN	D	d	KL1/KL2	Dia. k	n x d1/d2	n x dL	f1	f2	-
	[-]	[-]	[mm]				[pcs. x mm]		[mm]		[-]
32-55	Combination flange PN6/10 (flange PN 16 according to EN 1092-2)	32	140	76	90/100	–	4 x 14 / 19	-	–	–	E
32-90	Combination flange PN6/10 (flange PN 16 according to EN 1092-2)	32	140	76	90/100	–	4 x 14 / 19	-	–	–	E
40-60	Combination flange PN6/10 (flange PN 16 according to EN 1092-2)	40	150	84	100/110	–	4 x 14 / 19	-	–	–	E
40-80	Combination flange PN6/10 (flange PN 16 according to EN 1092-2)	40	150	84	100/110	–	4 x 14 / 19	-	–	–	E
40-110	Combination flange PN6/10 (flange PN 16 according to EN 1092-2)	40	150	84	100/110	–	4 x 14 / 19	-	65	65	F
50-70	Combination flange PN6/10 (flange PN 16 according to EN 1092-2)	50	165	99	110/125	–	4 x 14 / 19	-	–	–	E
50-80	Combination flange PN6/10 (flange PN 16 according to EN 1092-2)	50	165	99	110/125	–	4 x 14 / 19	-	–	–	E
50-110	Combination flange PN6/10 (flange PN 16 according to EN 1092-2)	50	165	99	110/125	–	4 x 14 / 19	-	70	70	F
65-90	Combination flange PN6/10 (flange PN 16 according to EN 1092-2)	65	185	118	130/145	–	4 x 14 / 19	-	–	–	E
65-110	Combination flange PN6/10 (flange PN 16 according to EN 1092-2)	65	185	118	130/145	–	4 x 14 / 19	-	80	80	F
80-90	Flange PN 10 (flange PN 16 according to EN 1092-2)	80	200	132	–	160	–	8x19	–	–	G

PRIUX MASTER

MIN. SUCTION LOAD

• **Priux master**

Minimum suction head at suction port [m] for preventing cavitation at water pumping temperature

	25-55	25-65	25-90	32-55	32-65	32-90	40-30	40-60	40-80	40-110	50-60	50-70	50-80	50-110	65-80	65-90	65-110	80-40	80-90	100-90
50°C	3	3	3	3	3	3	5	5	5	7	5	5	5	7	5	7	7	7	7	7
95°C	10	10	10	10	10	10	12	12	12	15	12	12	12	15	12	15	15	15	15	15
110°C	16	16	16	16	16	16	18	18	18	23	18	18	18	23	18	23	23	23	23	23

• **Priux master - D**

Minimum suction head at suction port [m] for preventing cavitation at water pumping temperature

	32-55	32-90	40-60	40-80	40-110	50-70	50-80	50-110	65-90	65-110	80-90
50°C	3	3	5	5	7	5	5	7	7	7	7
95°C	10	10	12	12	15	12	12	15	15	15	15
110°C	16	16	18	18	23	18	18	23	23	23	23

FEATURES

a) Packaging

Threaded models: supplied with gaskets without unions.

Flanged models: supplied with flange seals and bolts, without counterflanges (optional).

b) Maintenance

Replacing of motor unit.

RECOMMENDED ACCESSORIES

- Unions and PN 10/16 weldable round counterflanges
- Insulation shell (heating application)
- Adaptation fittings.
- Isolation valves
- Kit press 6.
- MGP / YN 1200 control box.

RANGE OF APPLICATION

Flows up to:	120 m³/h
Manometric head up to:	31 m
Maximum working pressure:	10 bar
Temperature range:	–20° to +110°C
Nominal diameter ports:	25 to 80
MEI* of reference:	≥ 0,10

*Minimum Efficiency Index

LRL - JRL

SINGLE AND DOUBLE IN-LINE PUMPS

Heating - Air conditioning - E.C.S.* 50 Hz

***A.C.S. Standard: contact us**

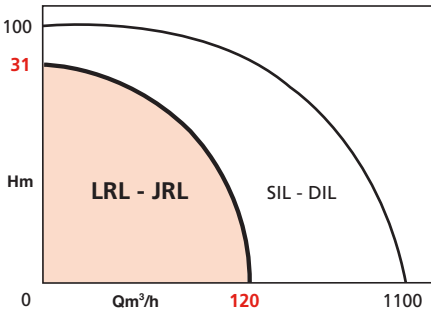

APPLICATIONS

- Heating small and medium multiple dwellings.
- Air conditioning.
- Domestic hot water systems

A.C.S. Standard: contact us.

Many industrial and agricultural applications.
- Heating greenhouses..
- Transferring antifreeze.
- Circulating iced water.

ADVANTAGES

- **Low electrical consumption.**
- **Mounts directly onto horizontal or vertical pipework.**
- **Not coupled: no need to align the shafts.**
- **Device to de-aerate the mechanical seal permanently.**
- **Easy and quick to install.**

JRL

- **A backup pump permanently available.**
- **The two pumps can be operated in parallel to increase the flow.**
- **Manual or automatic pump switchover by MGP box.**

• JRL: horizontal motors

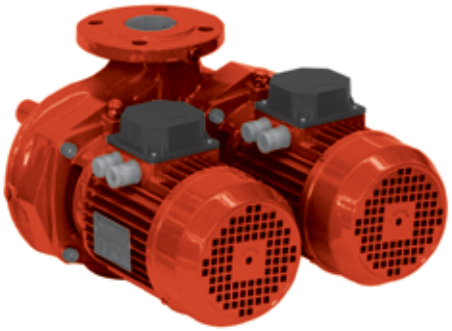



• LRL: vertical motor

• JRL: vertical motors





• LRL : moteur vertical

• LRL-U: horizontal motor



LRL - JRL

DESIGN

• Hydraulic part

- Centrifugal, single-stage.
- Intake and outlet ports in line.
- Flanged pump housing with ports for connecting pressure gauges, or connector union (version U).
- Bearing lantern linking pump to motor.
- Dynamically balanced impeller, mounted directly on the shaft of the motor.
- Waterproof mechanical seal.

JRL

- Double pump in one housing.
- The two pumps are hydraulically separated by silent-operating valve.

• Motor

- IE2
- One end of shaft lengthened.
- The rotor shaft's guide bearings selected for silent operation.

Speed:	1450 - 2900 rpm
3 ~ winding ≤ 3 kW:	230 V **Δ**
	400 V **Y**
3 ~ = 4kW:	400 V **Δ**
Frequency:	50 Hz
	(option 60 Hz)
Insulation class:	155 (F)
Protection class:	IP 55
EC Compliant:	EN 809

BASIC CONSTRUCTION

Main components	Material
Pump housing	Cast iron EN GJL 250
Bearing lantern	Cast iron EN GJL 250
Shaft	Steel X20 - Cr13
Mechanical seal	Graphite/Carbide Si/EP
Joint of corps	Ethylene Propylene
Impeller	Composite

IDENTIFICATION

LRL 2 03 U - 09/0.25 - P2

JRL 4

single pump
double pump

2 = 2 pole: 2900 rpm
4 = 4 pole: 1450 rpm

Nominal diam. of ports (cm)

to connector union

Nominal diam. of the impeller (cm)

Motor power (kW)

Option: ACS version (contact us)

LRL-U – PLAN AND CROSS-SECTION

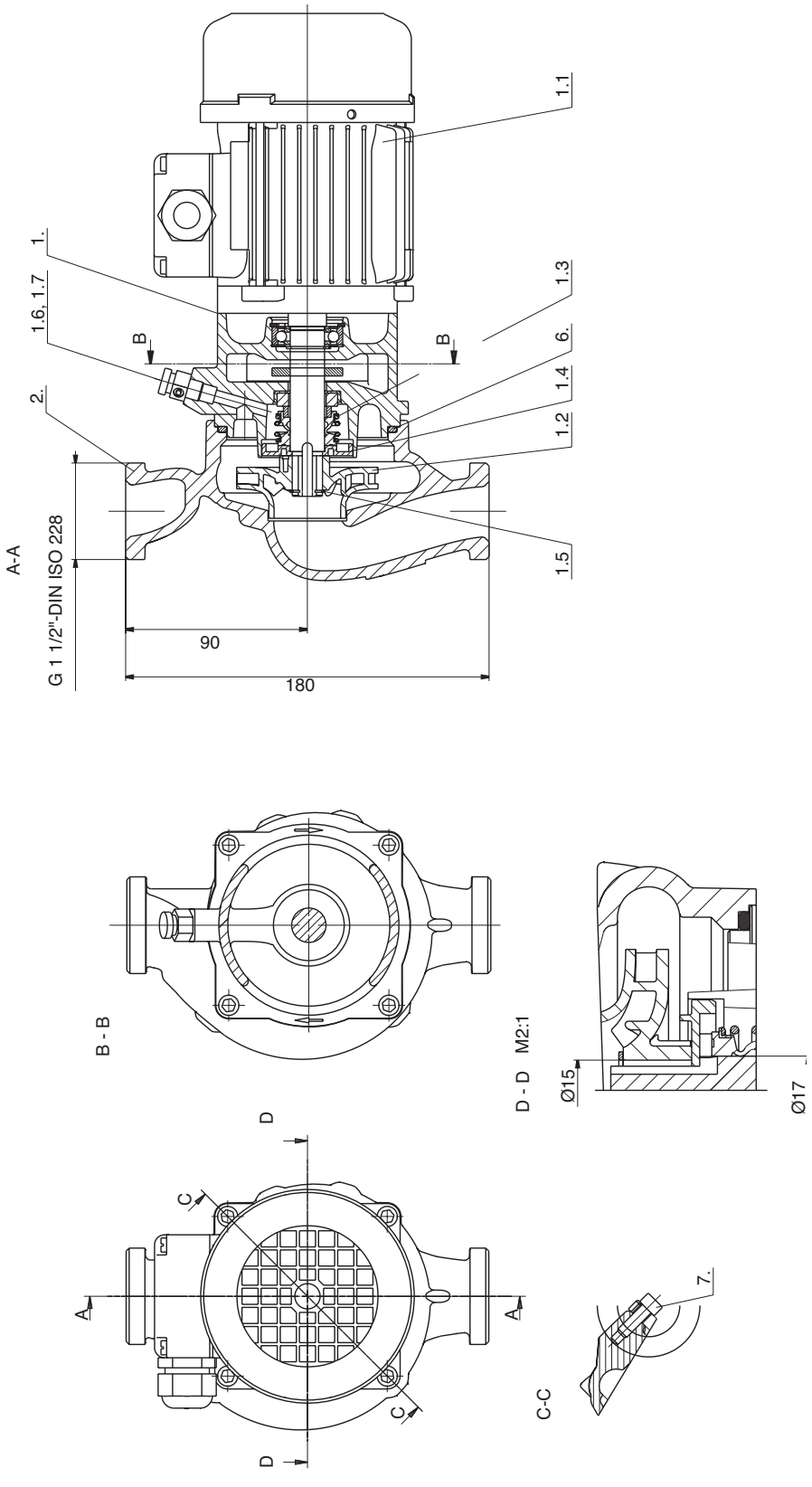

LRL - PLAN AND CROSS-SECTION

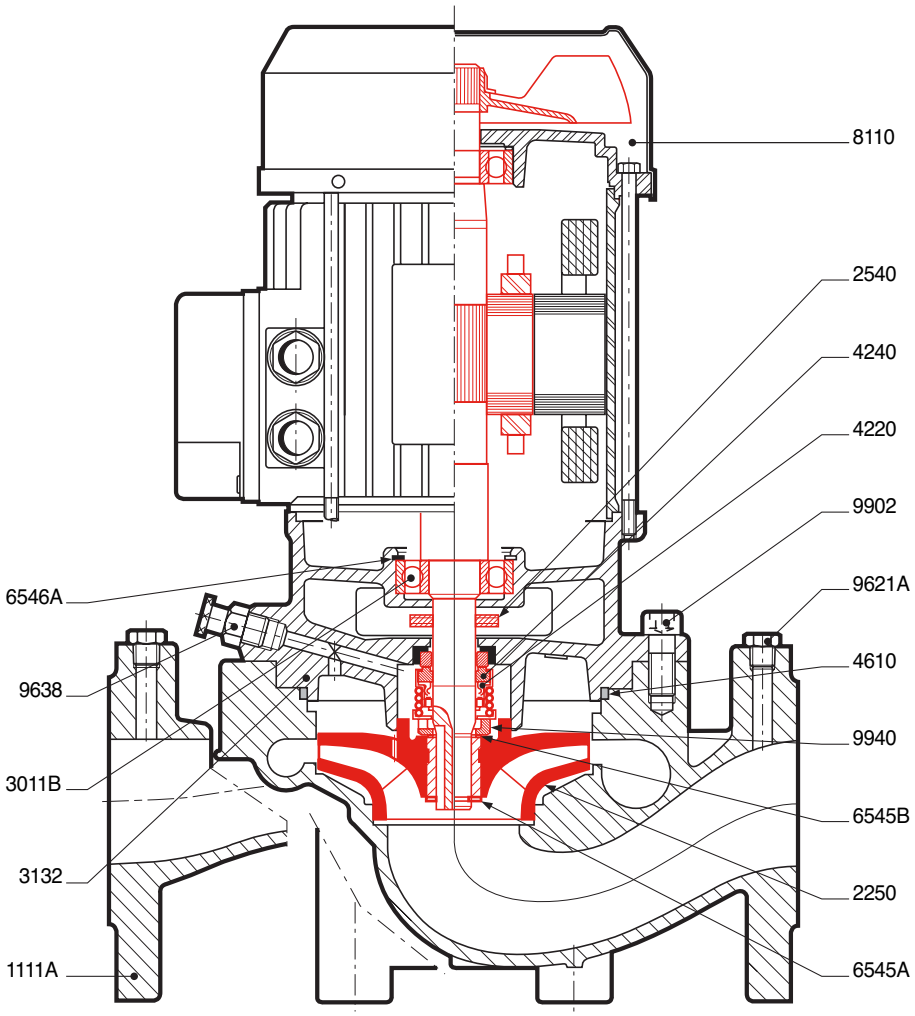

List (common to LRL - JRL)

- 1111A - Single pump housing
- 1111B - Double pump housing
- 2250 - Impeller
- 2540 - Deflector
- 3011B - Guide bearing

3132H - Bearing lantern

- 4220H - Rotating ring of mechanical seal
- 4240H - Fixed ring of mechanical seal
- 4610H - Fixed ring of mechanical seal
- 6545A - Snap ring on shaft
- 6545B - Snap ring on shaft
- 6546A - Circlip of bearing
- 8110H - Electric motor
- 9621A - Plug for pressure gauge take-off
- 9621B - Drain plugs (JRL)
- 9638 - De-aerator of mechanical seal
- 9647H - Outlet valve (JRL)
- 9902H - Bearing lantern retaining screw
- 9940H - Axial bearing of mechanical seal

(•) Spare parts recommended

GARNITURE MÉCANIQUE
(LRL-JRL)

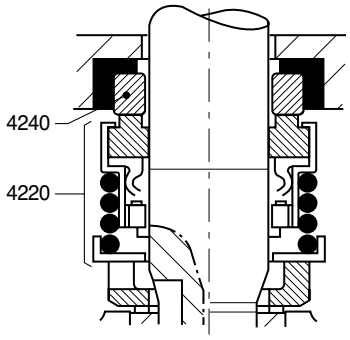

LRL - JRL

JRL – PLAN AND CROSS-SECTION

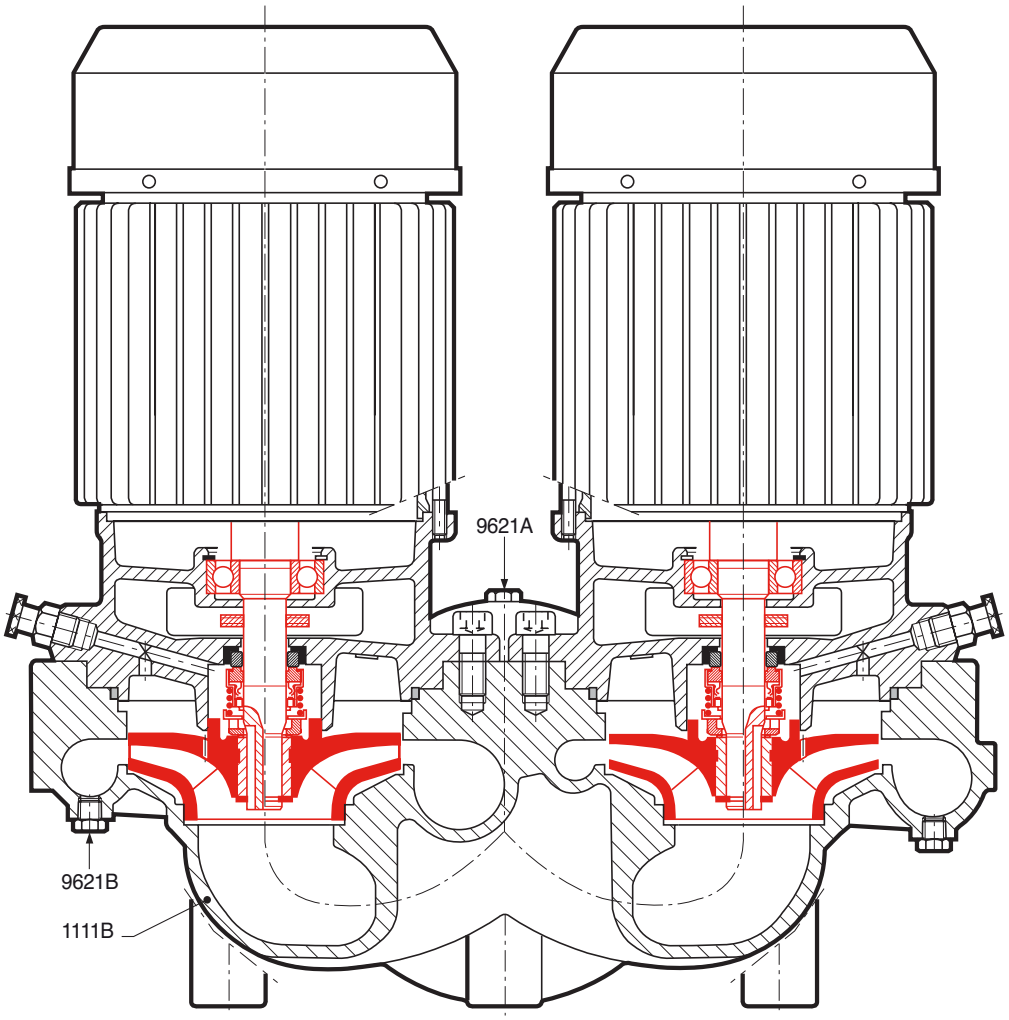

List (common to LRL - JRL)

- 1111A - Single pump housing
- 1111B - Double pump housing
- 2250 - Impeller
- 2540 - Deflector
- 3011B - Guide bearing

3132H - Bearing lantern

- 4220H - Rotating ring of mechanical seal
- 4240H - Fixed ring of mechanical seal
- 4610H - O-ring pump housing
- 6545A - Snap ring on shaft
- 6545B - Snap ring on shaft
- 6546A - Circlip of bearing
- 8110H - Electric motor
- 9621A - Plug for pressure gauge take-off
- 9621B - Drain plugs (JRL)
- 9638 - Deaerator of mechanical seal
- 9647H - Outlet valve (JRL)
- 9902H - Bearing lantern retaining screw
- 9940H - Axial bearing of mechanical seal

(•) Spare parts recommended

MECHANICAL SEAL
(LRL-JRL)

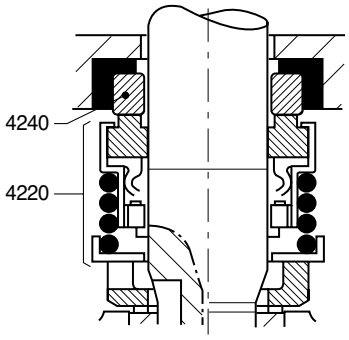

DETAILS OF OUTLET (JRL)
VALVE

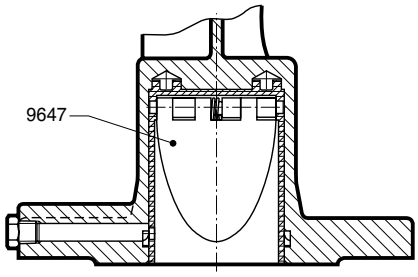

LRL - GENERAL PRESELECTION GRAPHS

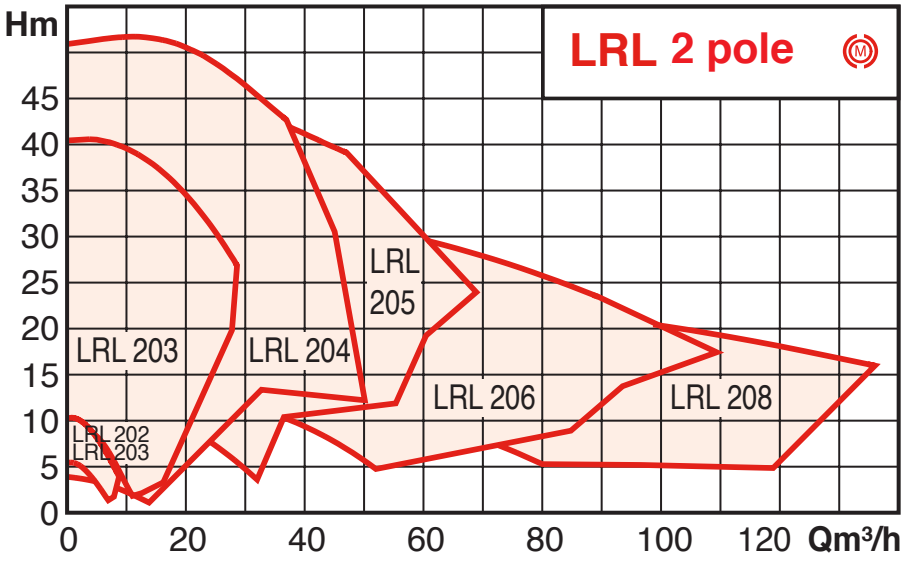

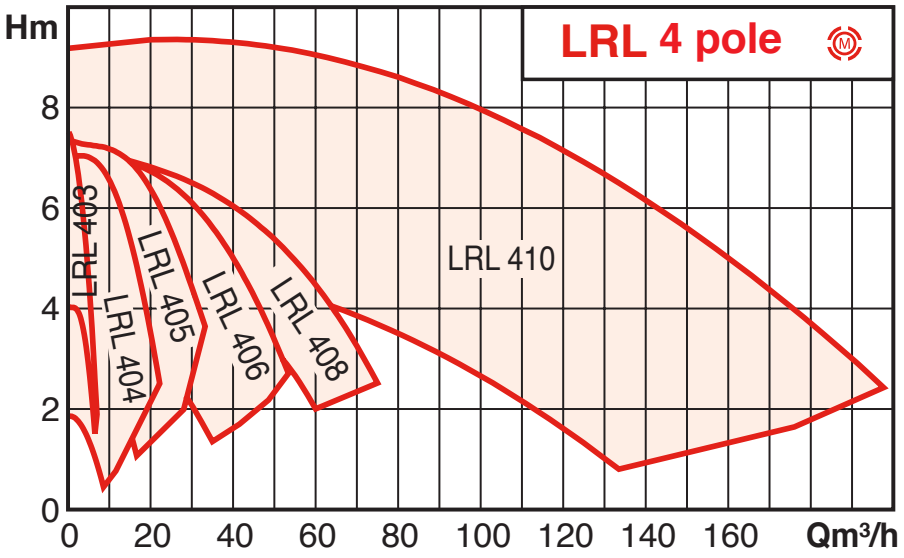

MOUNTING POSITIONS

- mounted directly onto horizontal or vertical pipework

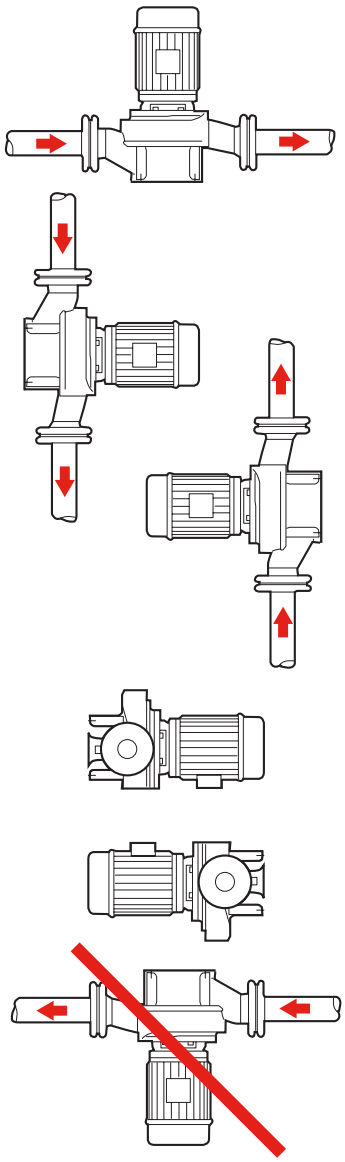

- pumps nominal diameter 65 and 80 mounted on solid base with optional support.

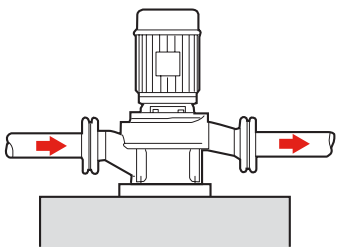

LRL - JRL

JRL - GENERAL PRESELECTION GRAPHS

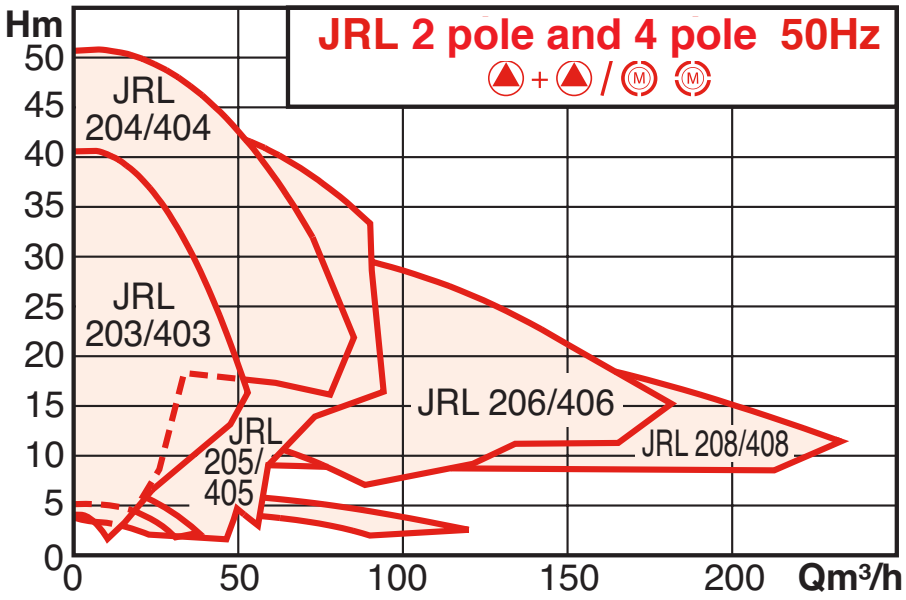

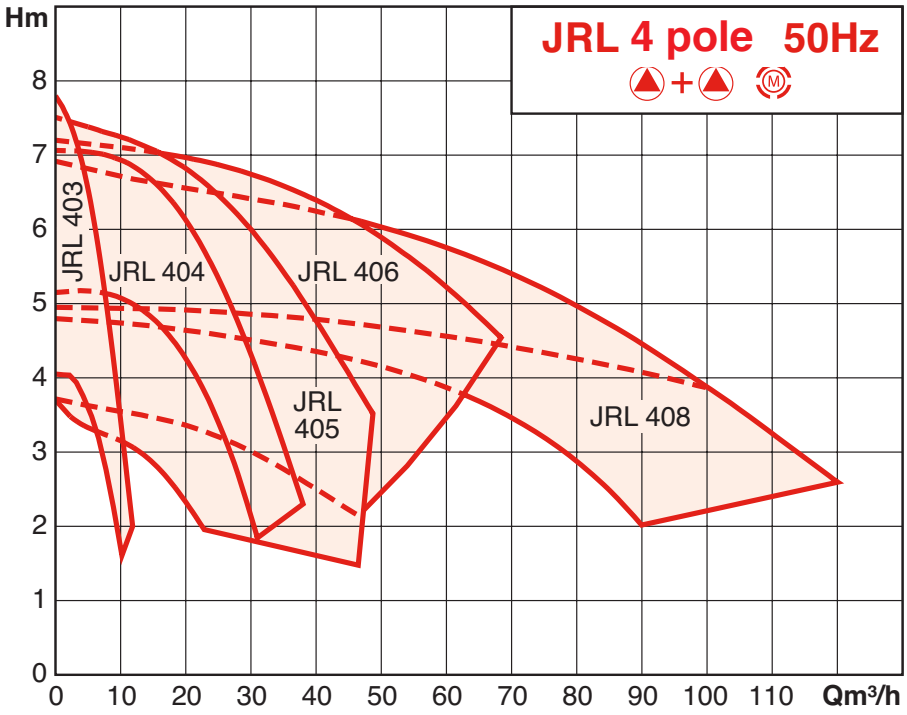

MOUNTING POSITIONS

- mounted directly onto horizontal or vertical pipework

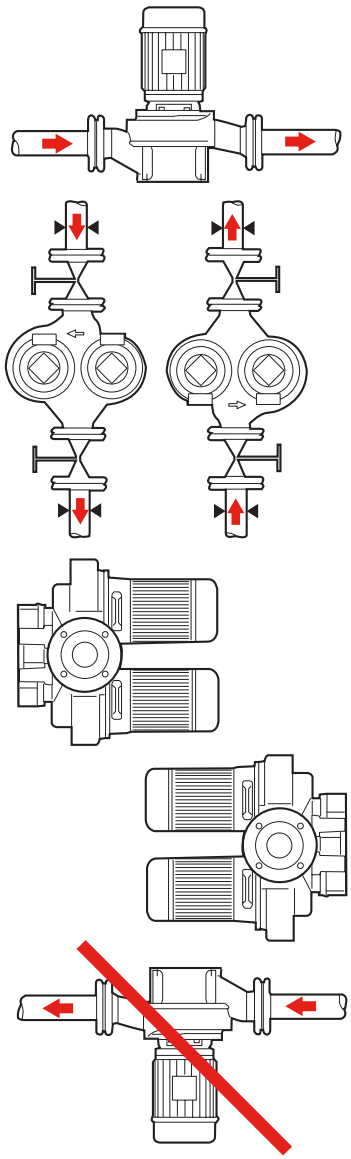

- pumps nominal diameter 65 and 80 mounted on solid base with optional support

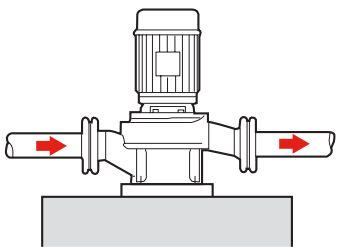

HYDRAULIC PERFORMANCE LRL 4 POLE

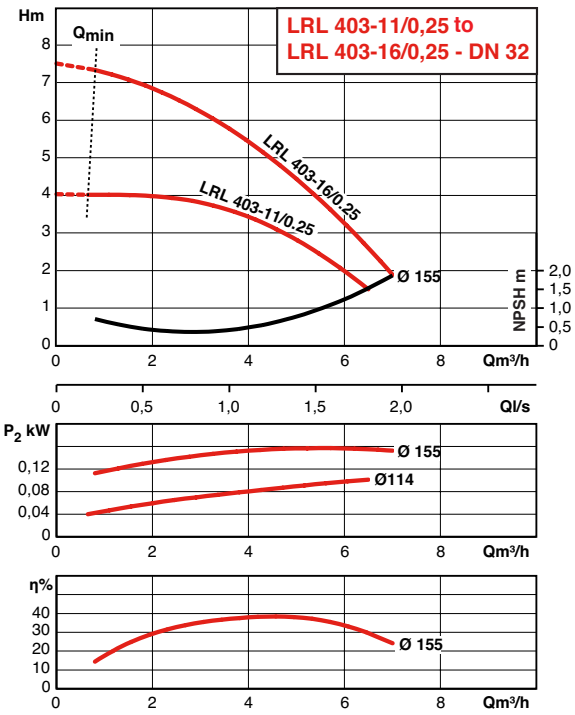

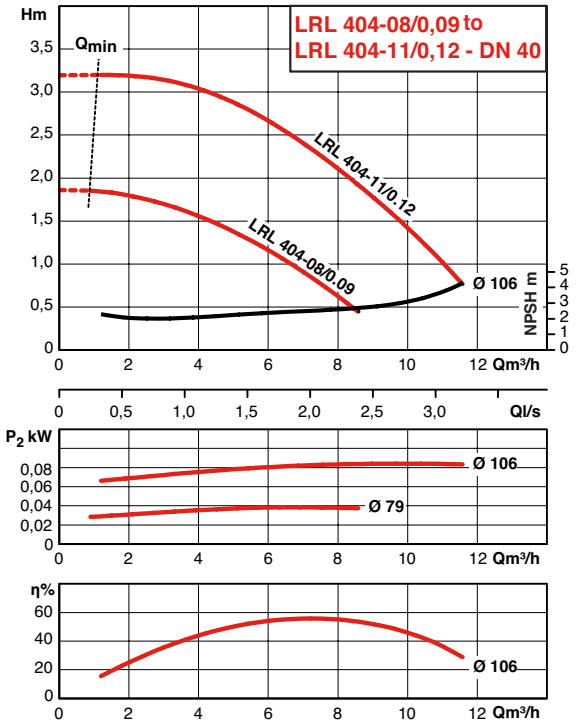

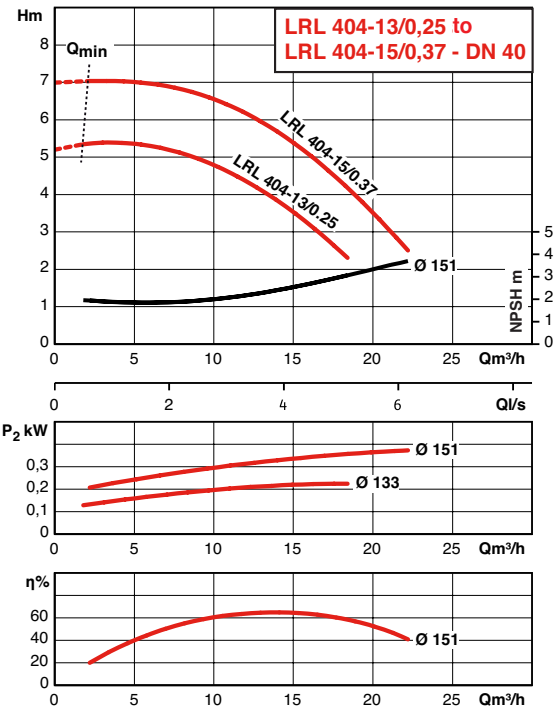

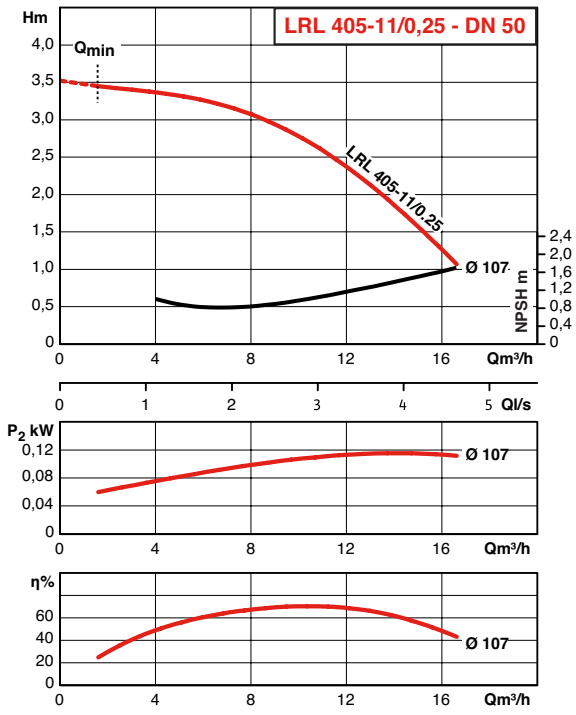

LRL - JRL

HYDRAULIC PERFORMANCE LRL 4 POLE

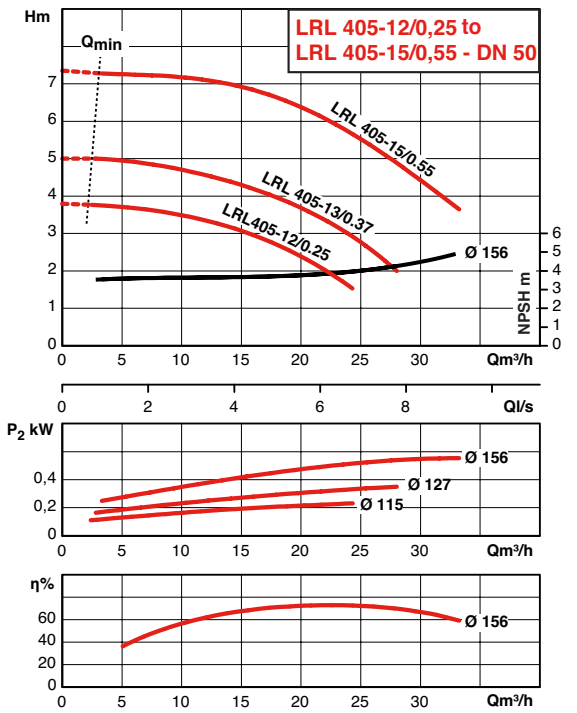

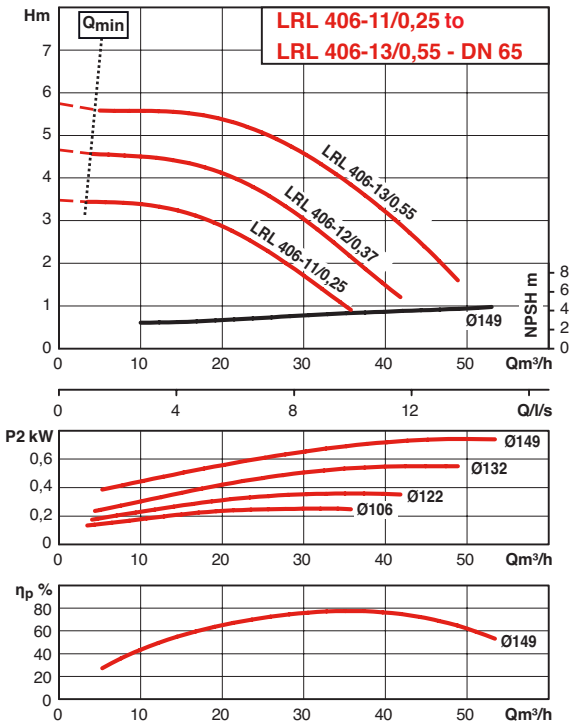

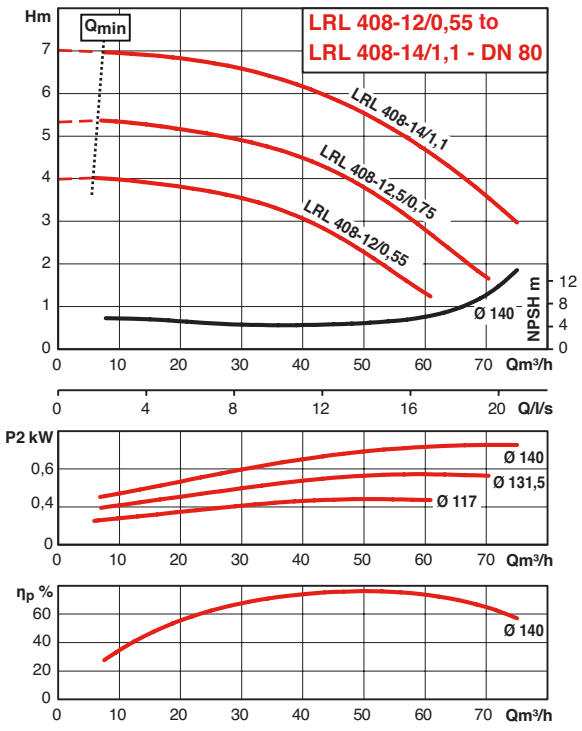

HYDRAULIC PERFORMANCE LRL-U- 2 POLE

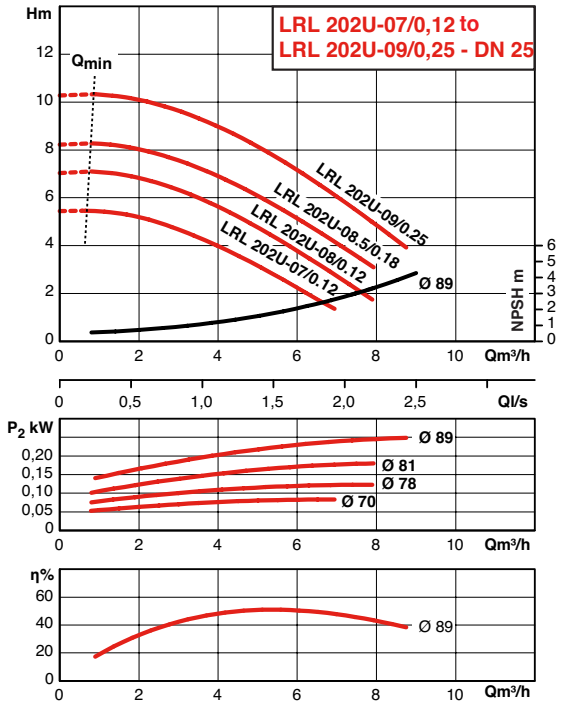

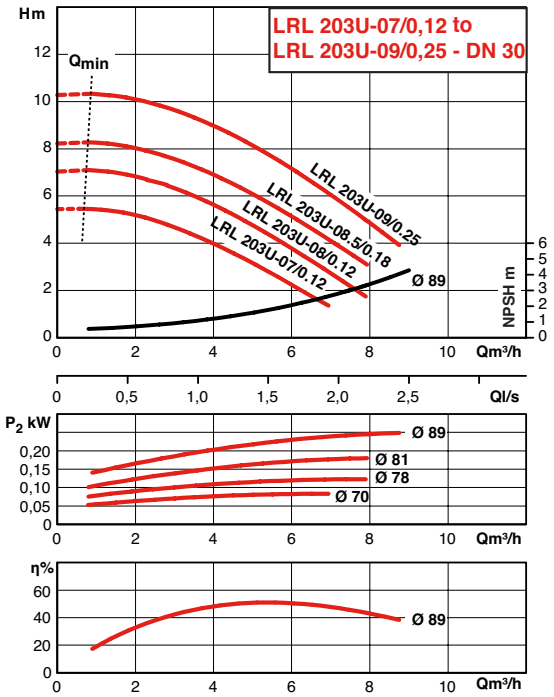

HYDRAULIC PERFORMANCE LRL 2 POLE

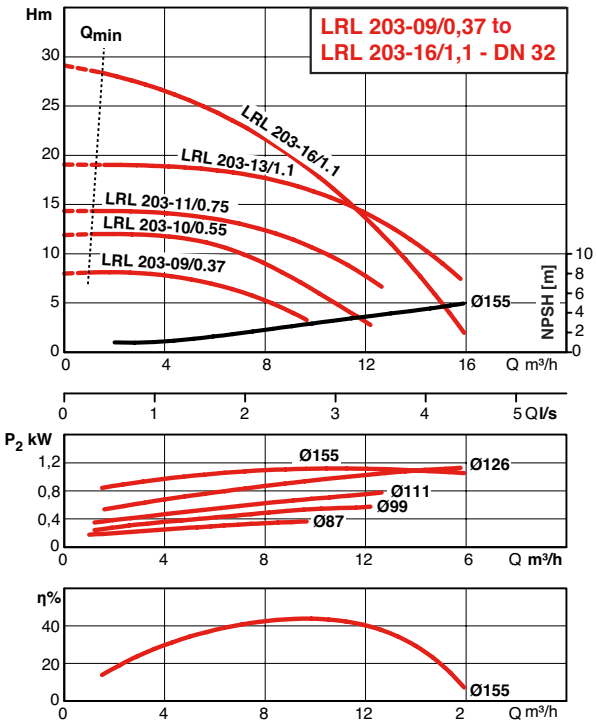

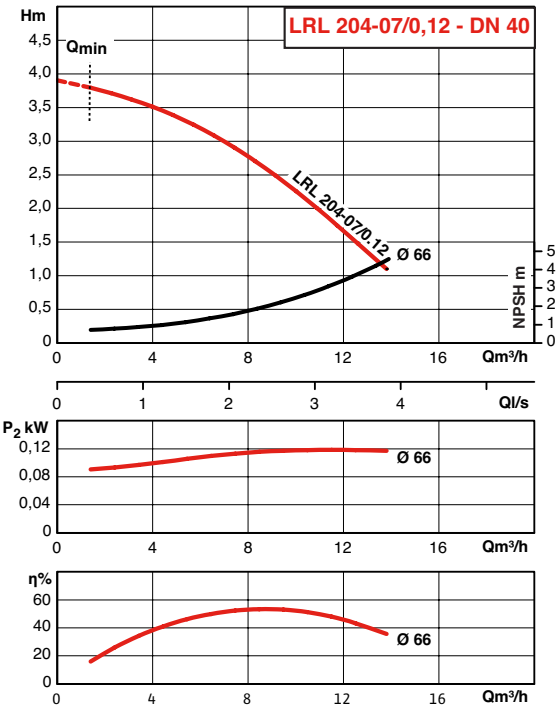

HYDRAULIC PERFORMANCE LRL 2 POLE

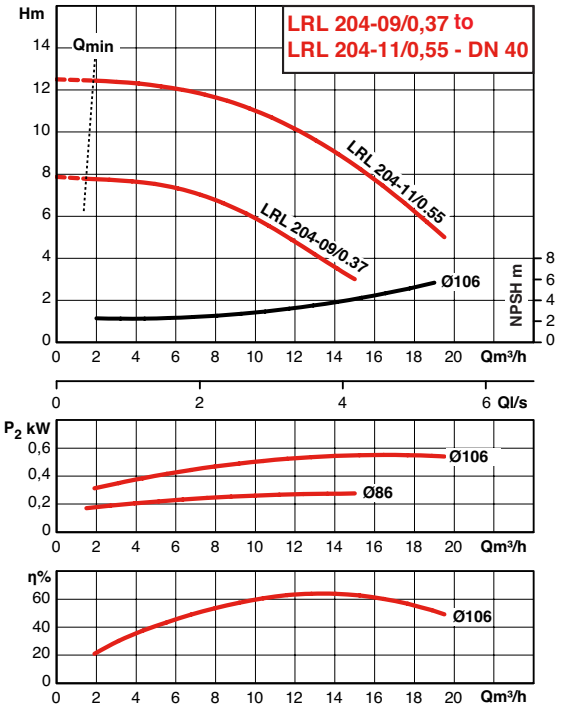

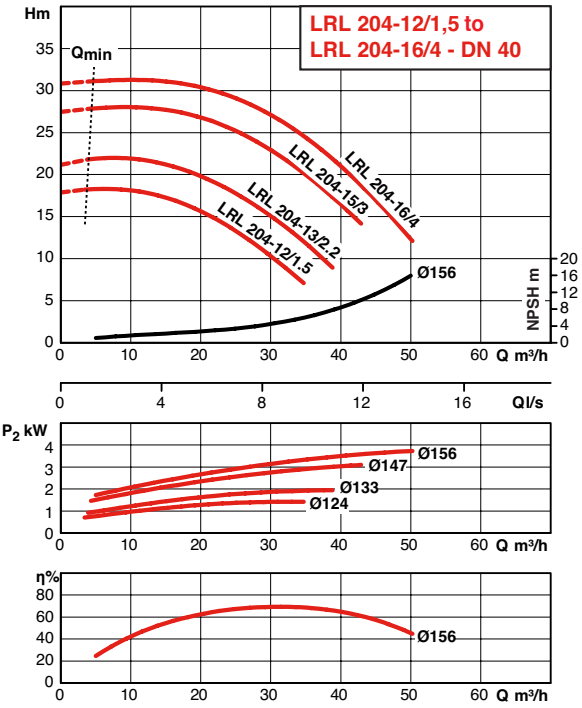

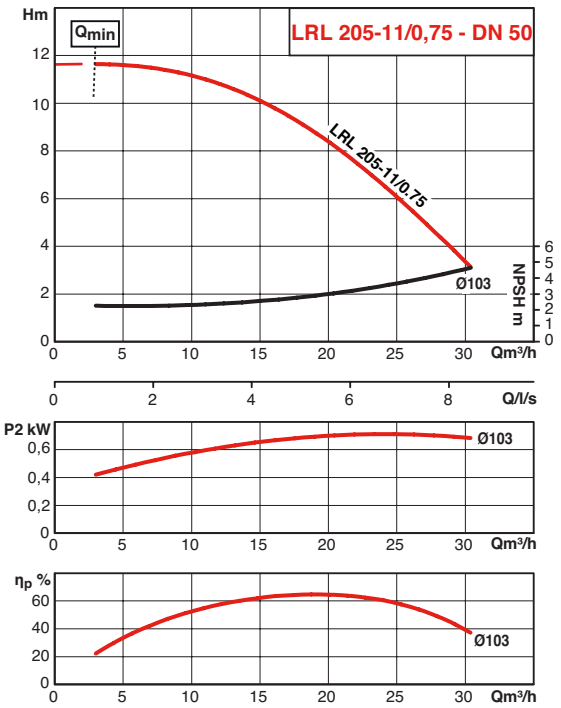

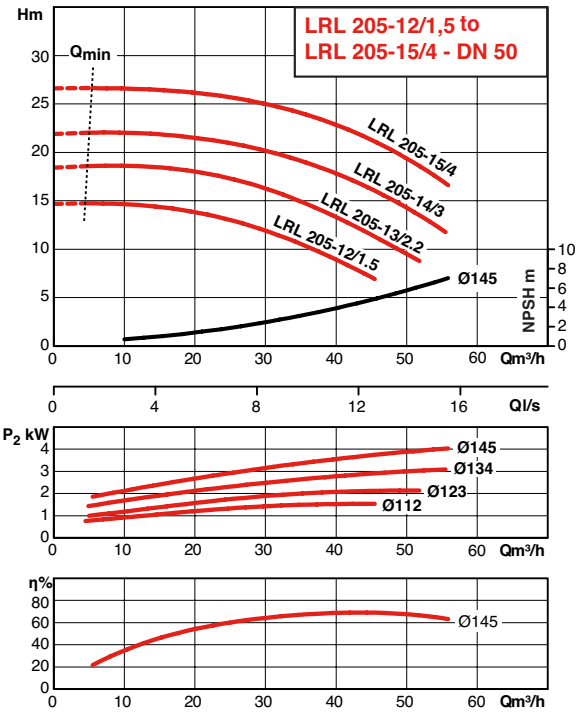

HYDRAULIC PERFORMANCE LRL 2 POLE

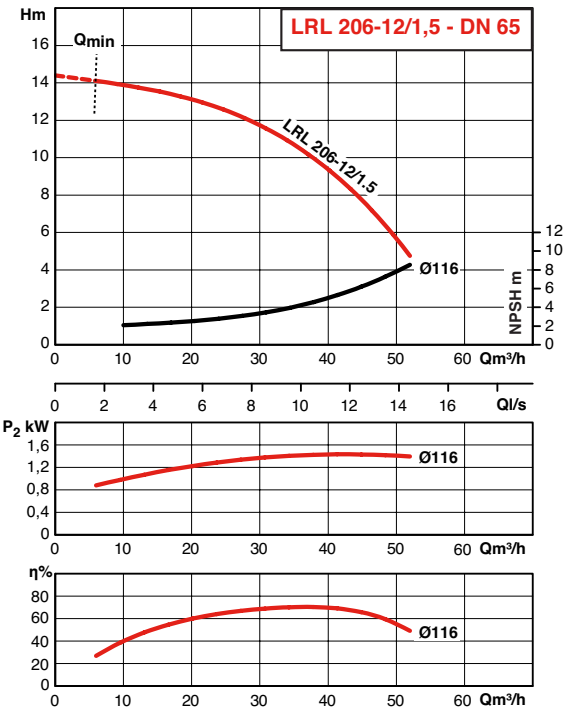

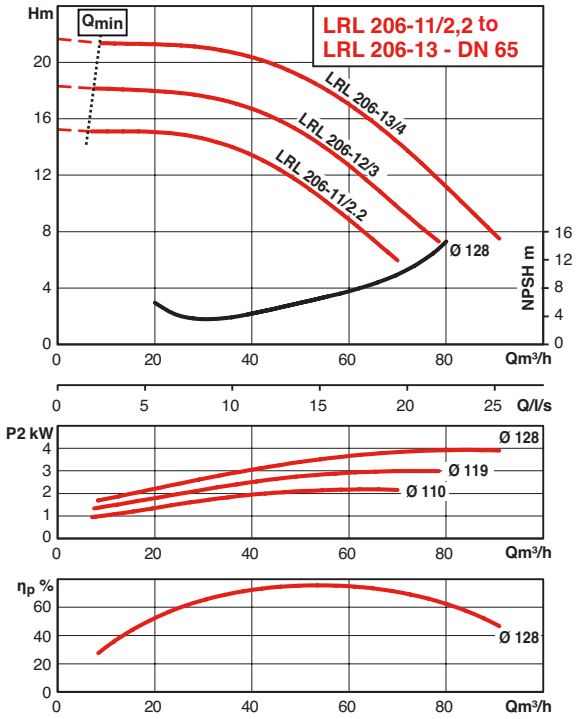

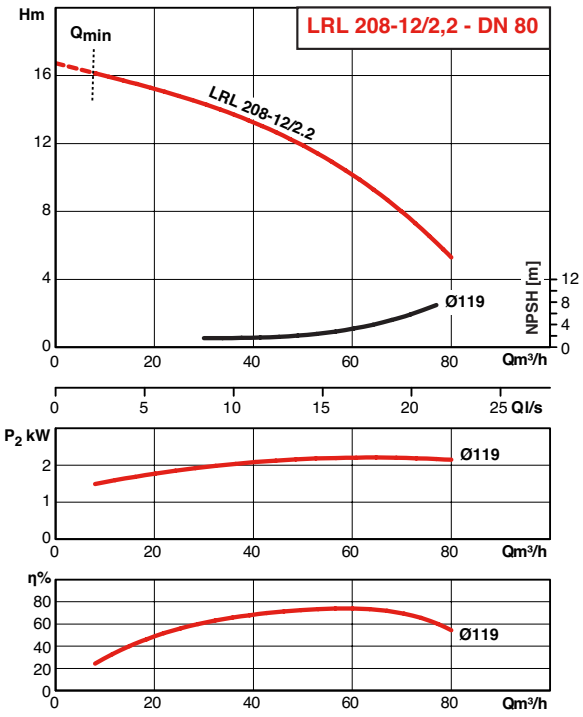

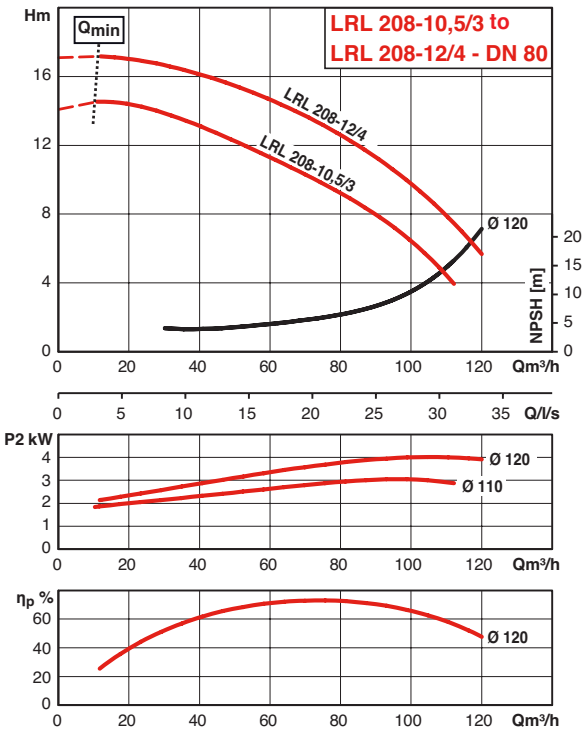

HYDRAULIC PERFORMANCE JRL 4 POLE

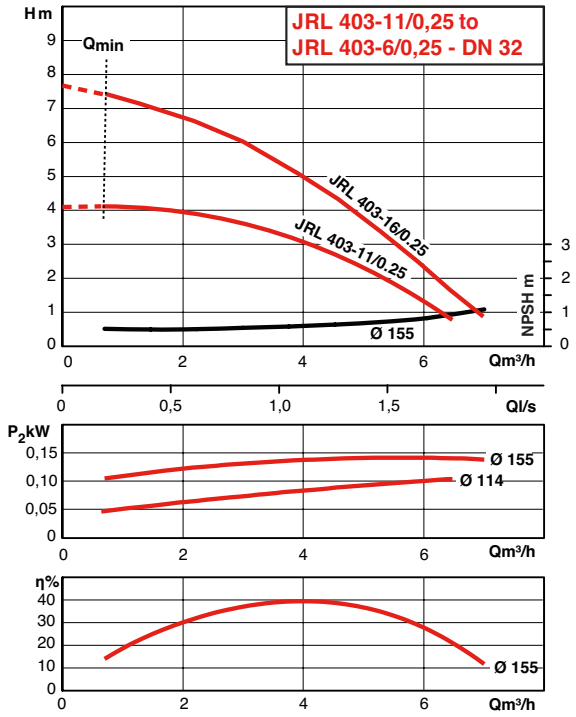

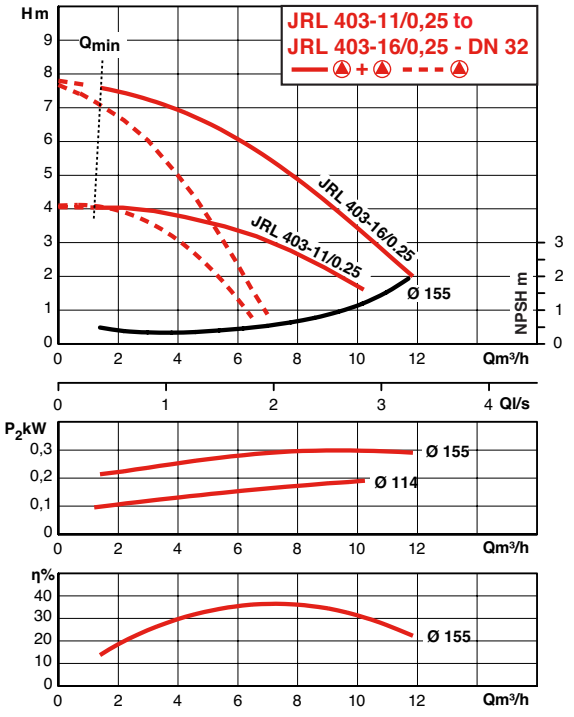

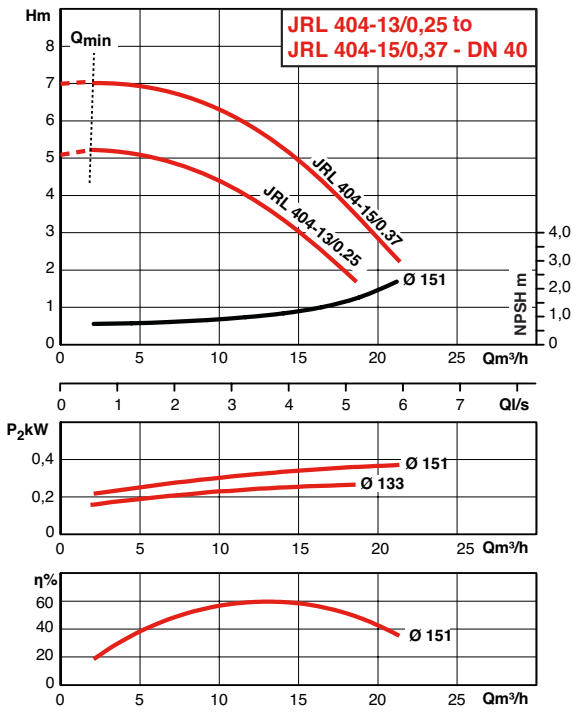

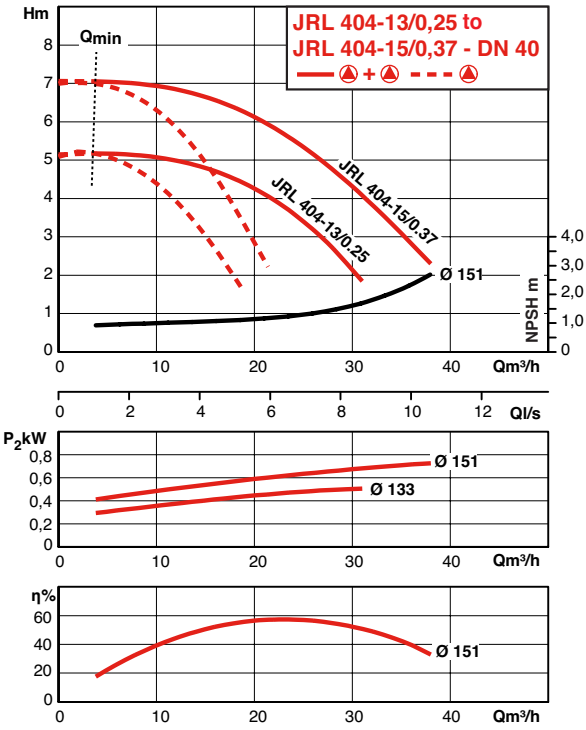

HYDRAULIC PERFORMANCE JRL 4 POLE

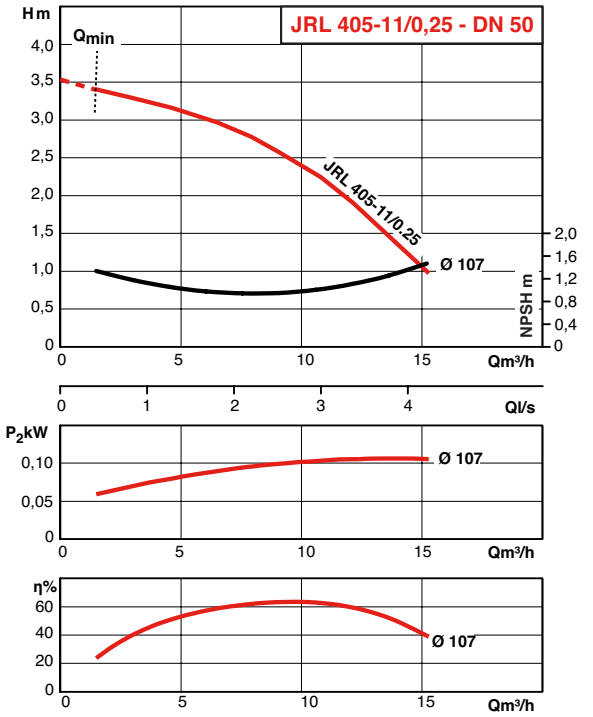

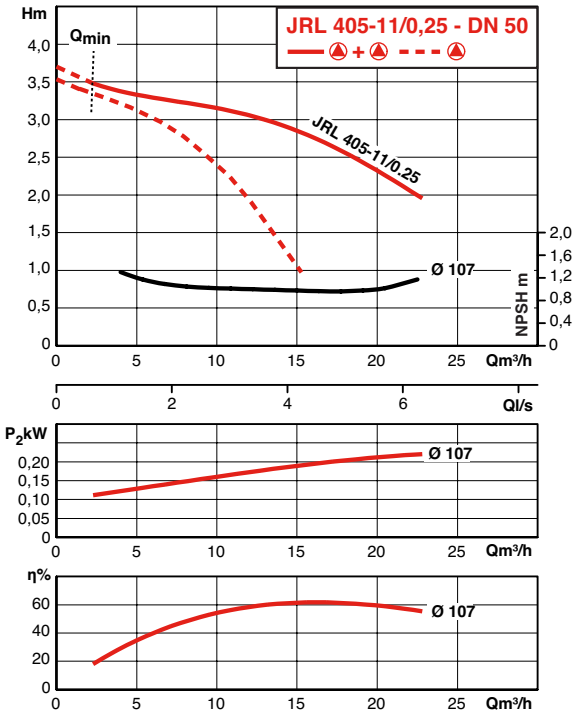

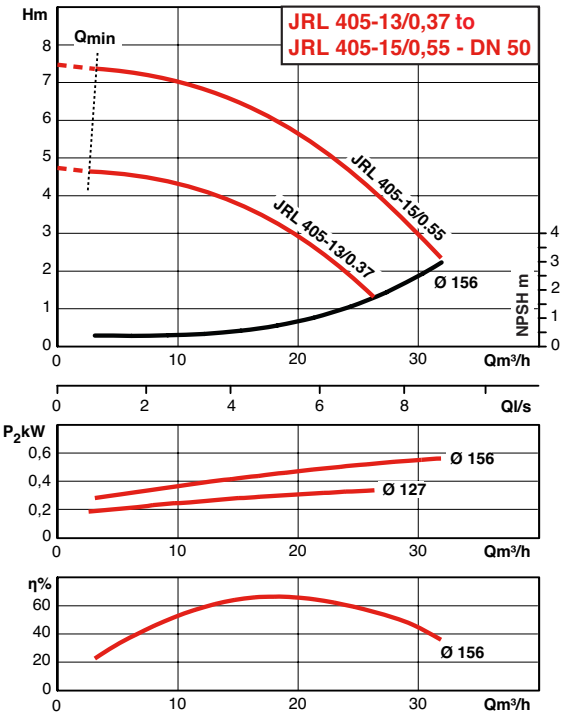

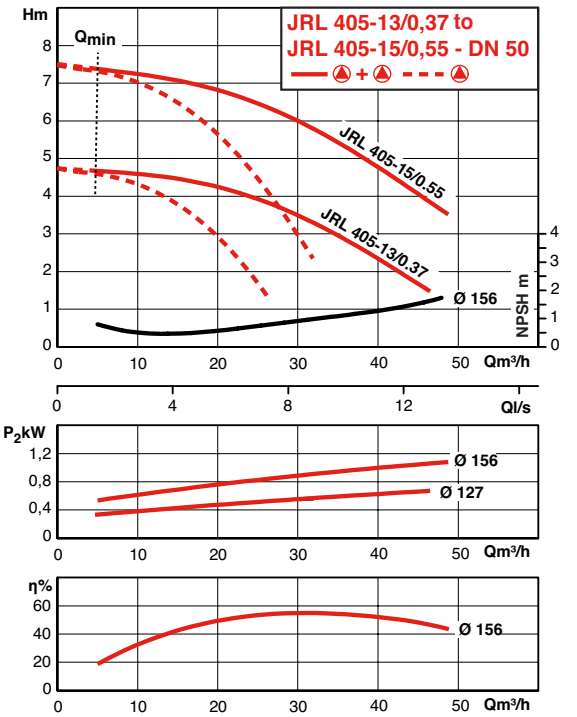

HYDRAULIC PERFORMANCE JRL 4 POLE

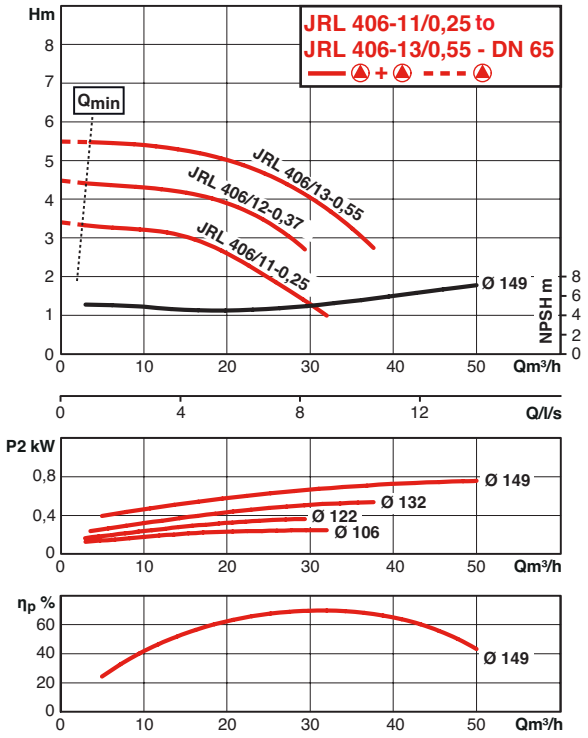

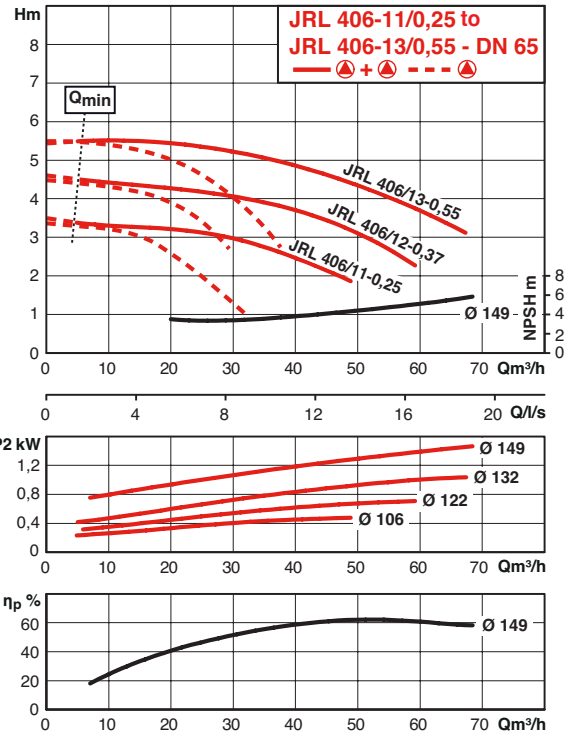

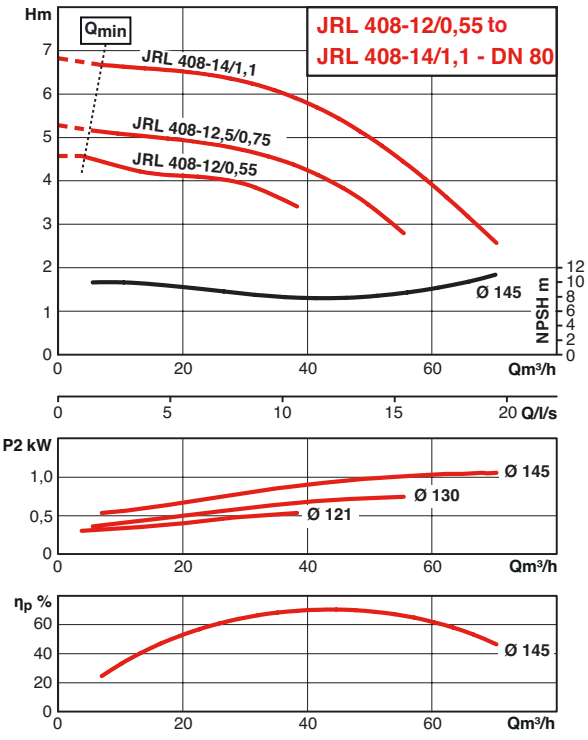

HYDRAULIC PERFORMANCE JRL 2 POLE

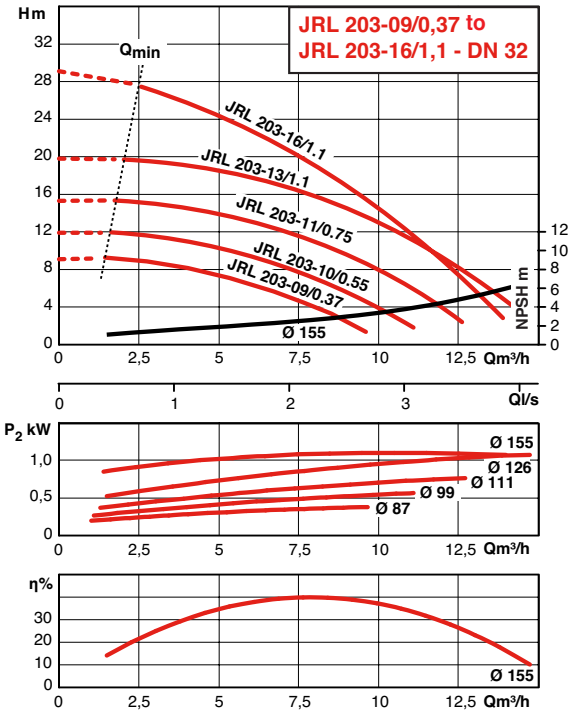

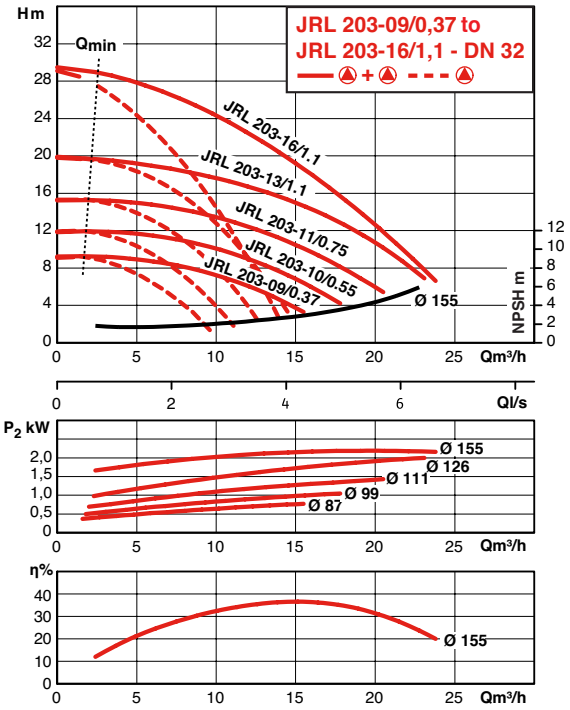

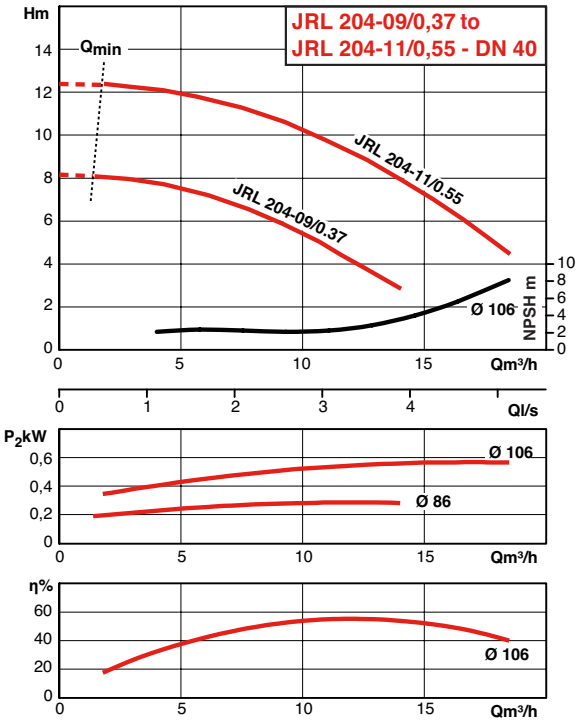

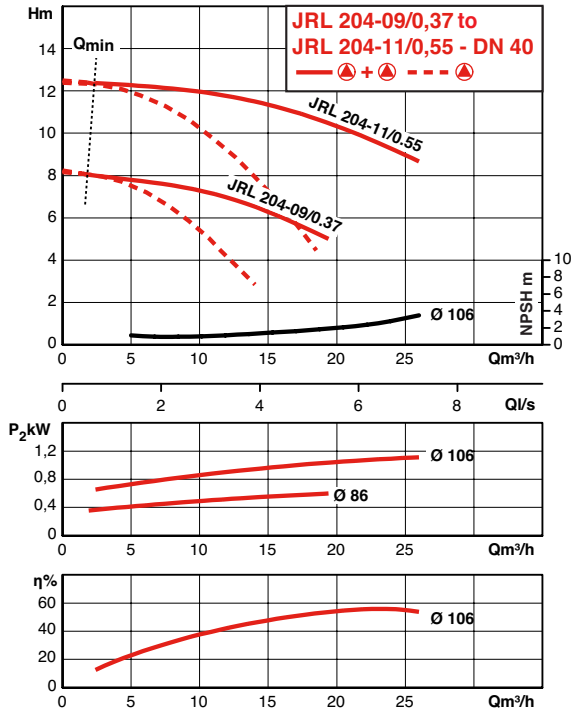

HYDRAULIC PERFORMANCE JRL 2 POLE

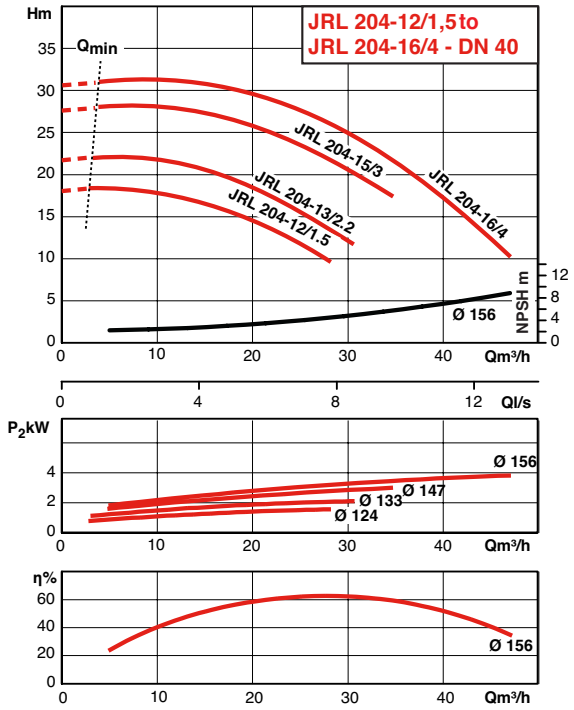

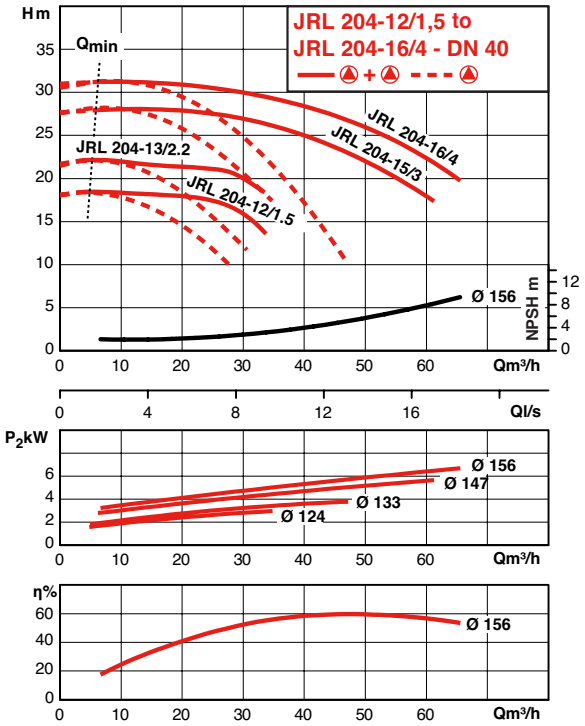

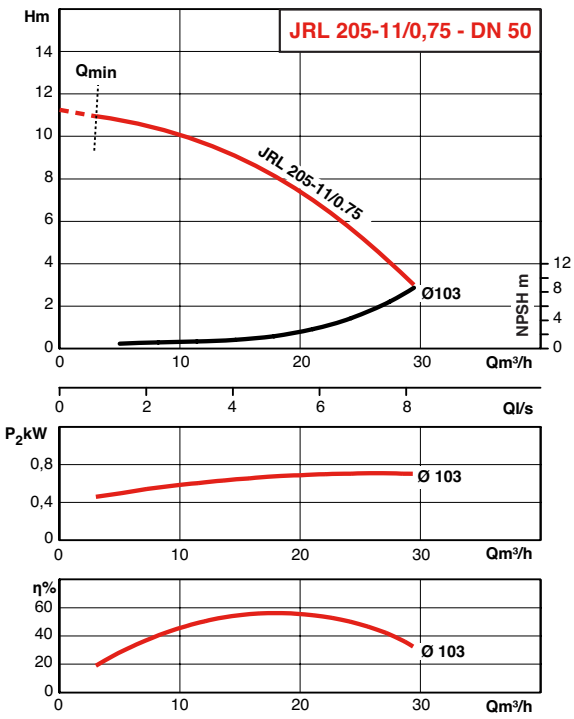

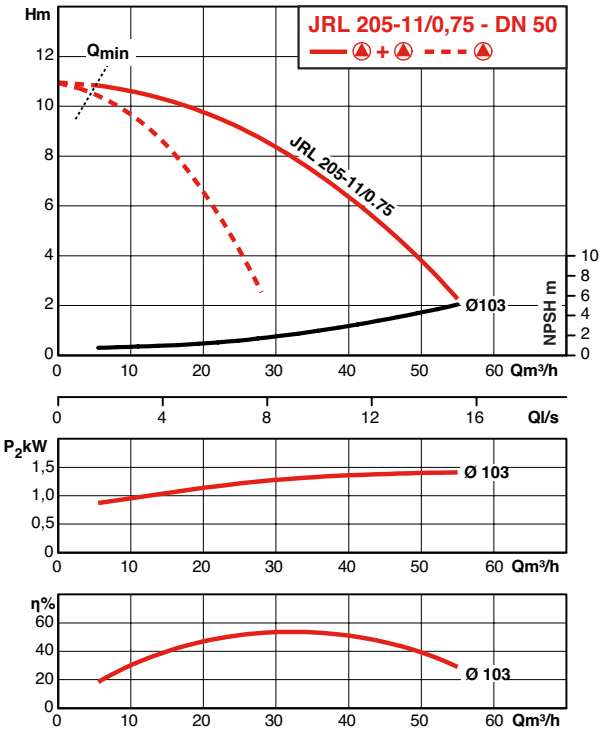

HYDRAULIC PERFORMANCE JRL 2 POLE

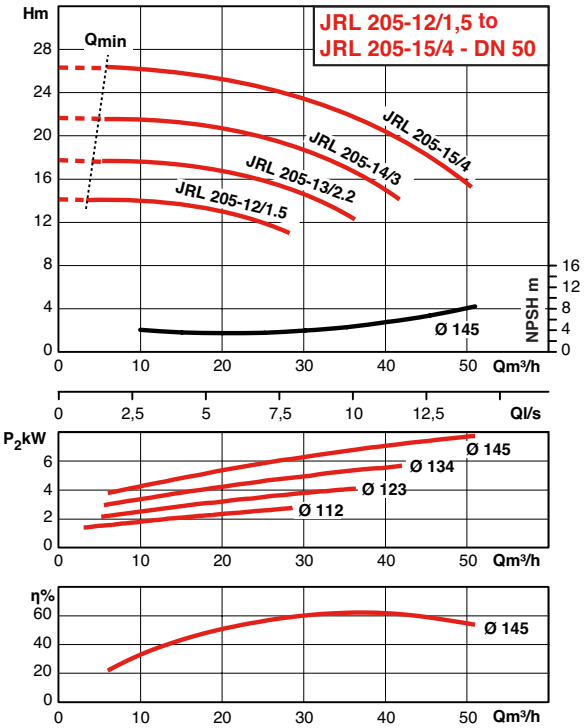

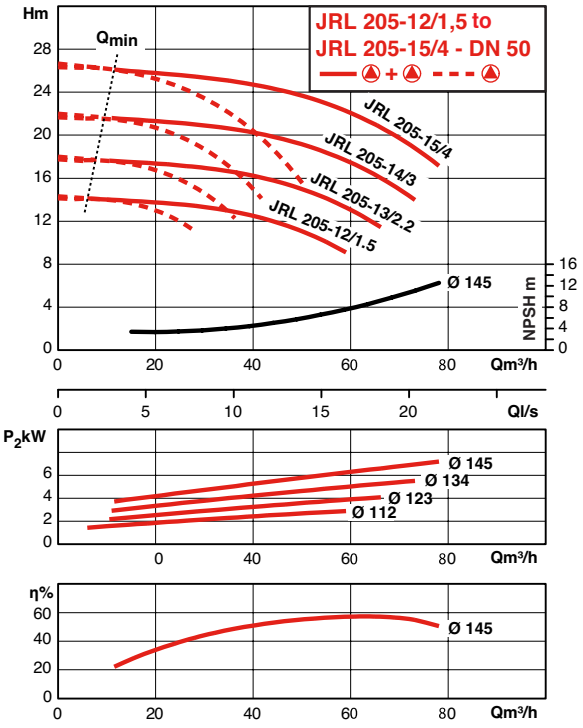

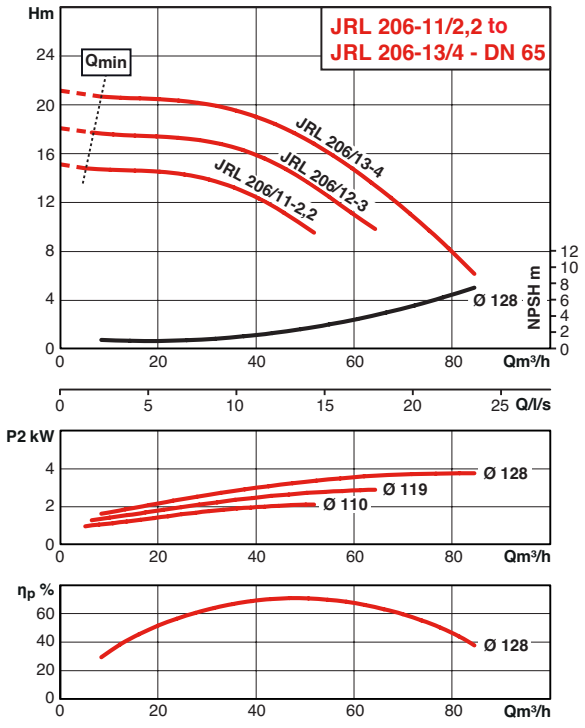

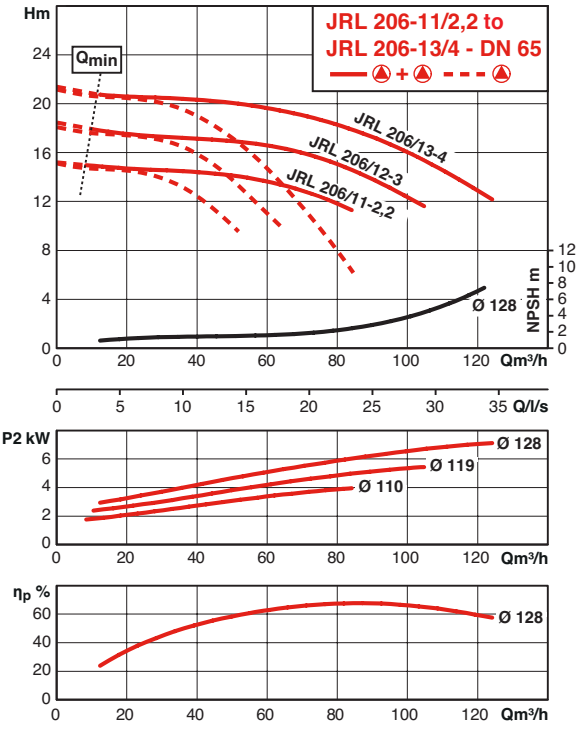

HYDRAULIC PERFORMANCE JRL 2 POLE

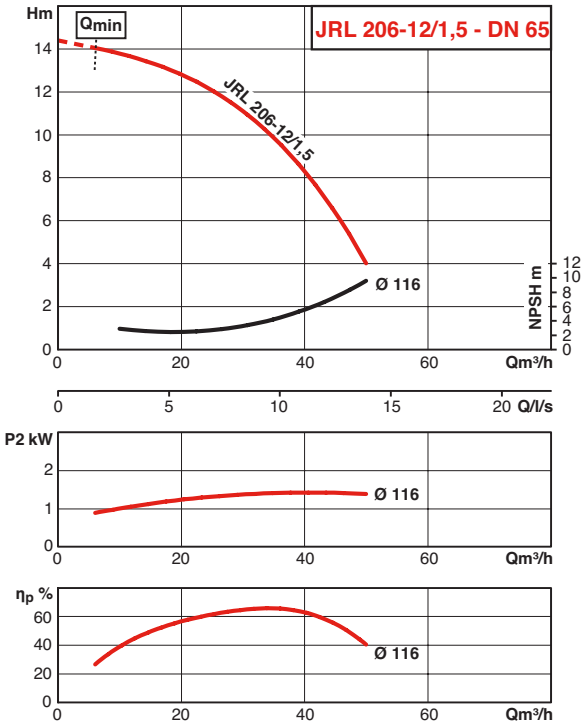

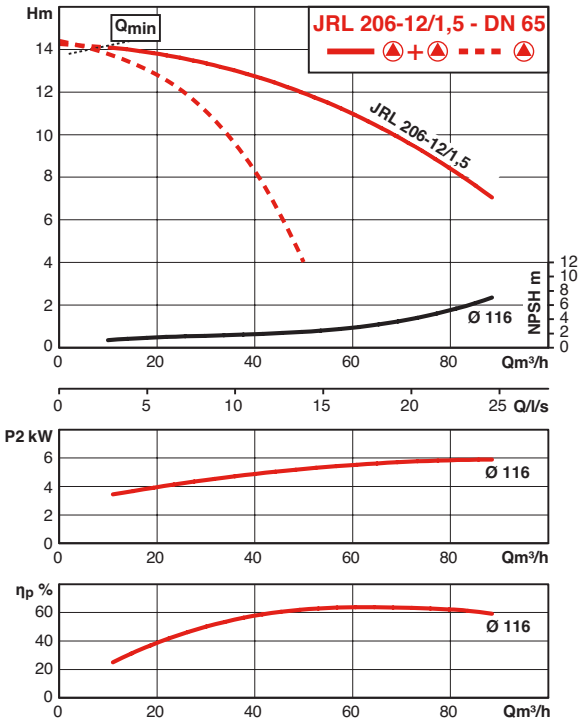

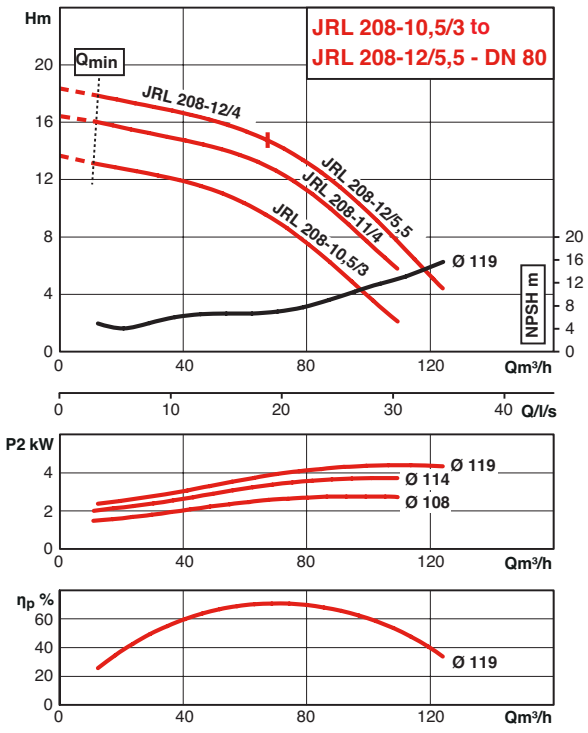

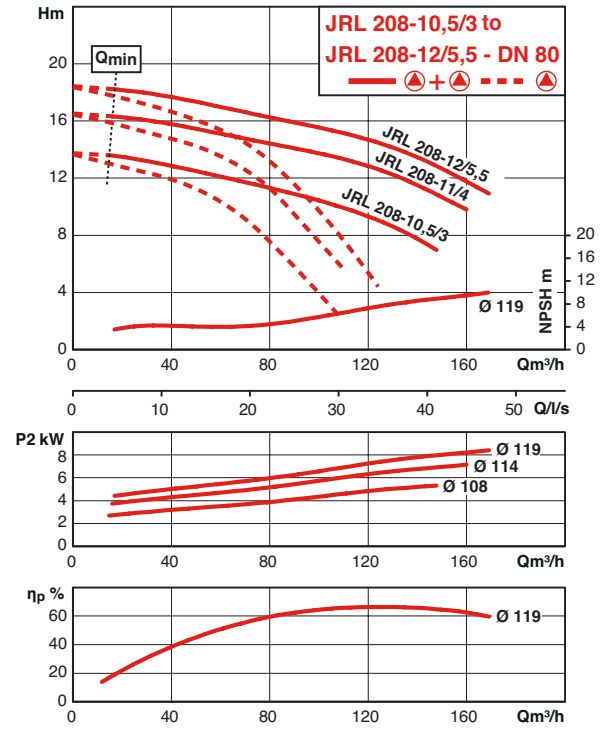

HYDRAULIC PERFORMANCE JRL 2 POLE

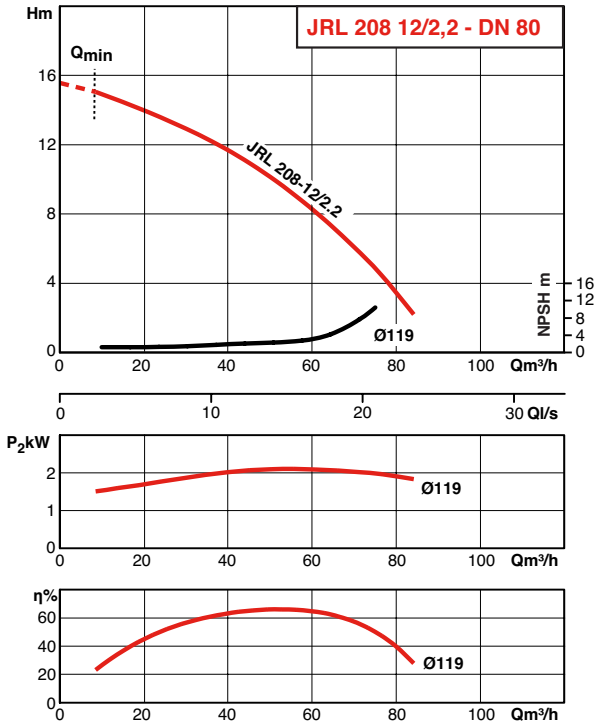

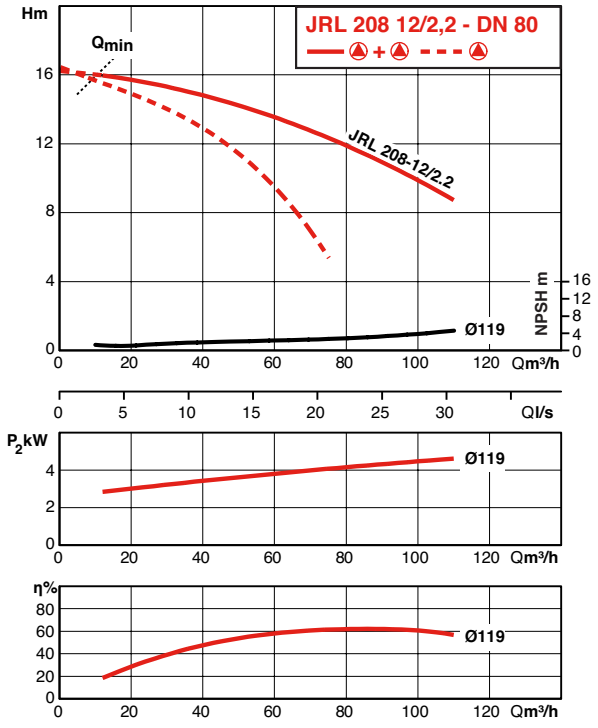

LRL - JRL

LRL-U: ELECTRICAL CHARACTERISTICS AND SIZES

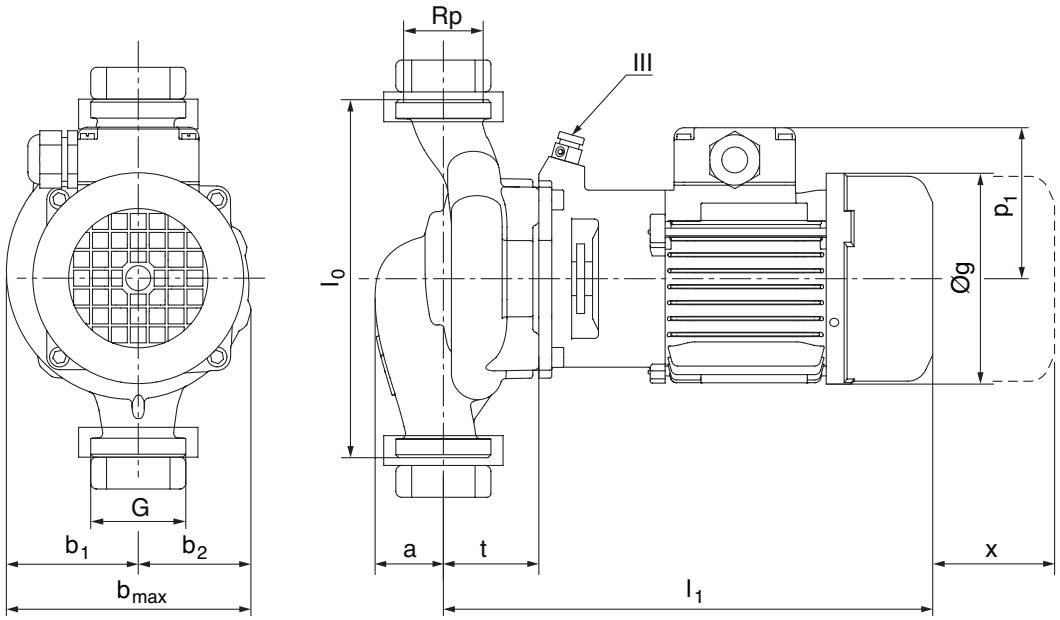

ORDER REFERENCE	MOTOR					PUMP											
	Power rating of the motor	Efficiency of motor %	Power factor	Nominal speed	Nominal current (approx.)	G	A	T	B max	B1	B2	L1	L0	P1	X	ØG	mass
	P2	η	cos ϕ	n	in A												
	W						mm										kg
LRL202U-07/0.12	120	64	0.75	2780	0.33	1½	34	48	123	66	57	247	180	76	100	106	6,5
LRL202U-08/0.12	120	64	0.75	2780	0.33	1½	34	48	123	66	57	247	180	76	100	106	6,5
LRL202U-08.5/0.18	180	67.4	0.72	2860	0.5	1½	52	44	137	69	68	251	180	107	100	125	8
LRL202U-09/0.25	250	69.9	0.81	2860	0.6	1½	52	44	137	69	68	251	180	107	100	125	9
LRL203U-07/0.12	120	64	0.75	2780	0.33	2	34	55	123	66	57	254	180	76	100	106	6,5
LRL203U-08.5/0.18	120	64	0.75	2780	0.33	2	34	55	123	66	57	254	180	76	100	106	6,5
LRL203U-08/0.12	180	67.4	0.72	2860	0.5	2	52	44	137	69	68	251	180	107	100	125	8
LRL203U-09/0.25	250	69.9	0.81	2860	0.6	2	52	44	137	69	68	251	180	107	100	125	8,6

LRL: ELECTRICAL CHARACTERISTICS AND SIZES

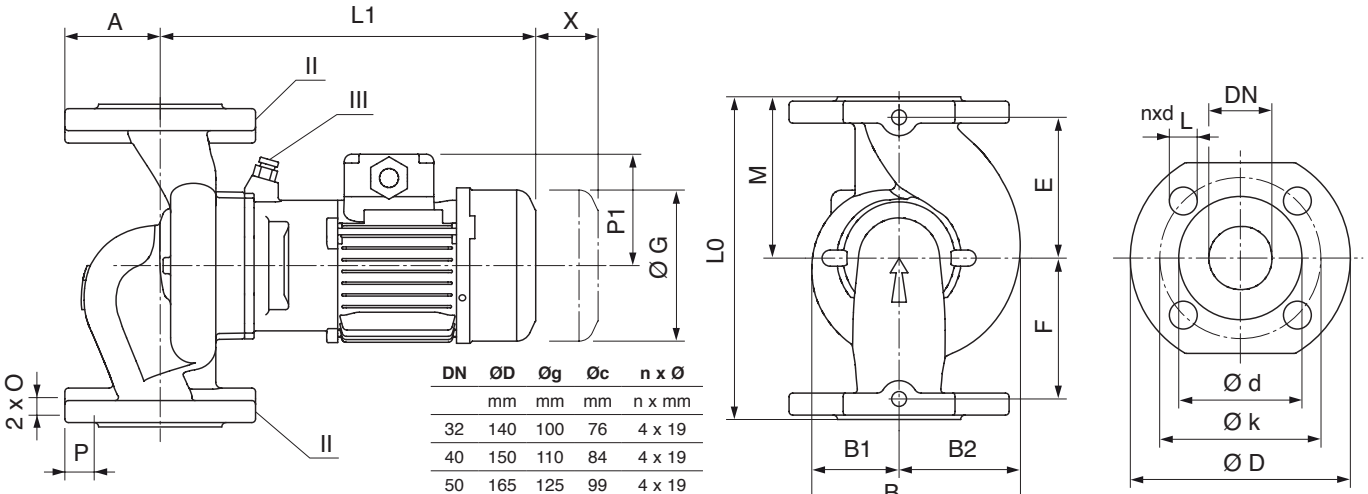

DN	ØD	Øg	Øc	n x Ø
	mm	mm	mm	n x mm
32	140	100	76	4 x 19
40	150	110	84	4 x 19
50	165	125	99	4 x 19
65	185	145	118	4 x 19
80	200	160	132	8 x 19
100	220	180	156	8 x 19

ORDER REFERENCE	MOTOR					PUMP																	
	P2	Efficiency of motor %	Power factor	Nominal speed	Nominal current (approx.)	DN	A	T	B max	B1	B2	L1	L0	P1	C	E	F	M	O	P	X	ØG	mass
	W	η	cos ϕ	rpm	in A	mm	mm	mm	mm	mm	mm	mm	mm	mm	mm	mm	mm	mm	mm	mm	mm	mm	kg
LRL203-16/1.1	370	72.8	0.78	2900	0.86	32	70	55	207	101	106	321	260	121	90	40	50	130	M10	20	150	141.2	20,7
LRL203-09/0.37	550	75.5	0.76	2900	1.33	32	70	55	207	101	106	321	260	121	90	40	50	130	M10	20	150	141.2	23
LRL203-10/0.55	750	77.4	0.81	2900	1.7	32	70	55	207	101	106	341	260	128	90	40	50	130	M10	20	150	185	25,5
LRL203-11/0.75	1100	79.6	0.83	2900	2.4	32	70	55	207	101	106	341	260	128	90	40	50	130	M10	20	150	185	26,1
LRL203-13/1.1	1100	79.6	0.83	2900	2.4	32	70	55	207	101	106	341	260	128	90	40	50	130	M10	20	150	185	26,1
LRL204-07/0.12	120	64	0.75	2780	0.33	40	65	61	159	75	84	259	220	76	-	95	95	110	M10	20	150	106	11
LRL204-09/0.37	370	72.8	0.78	2900	0.86	40	65	50	170	80	90	320	250	121	-	110	110	125	M10	20	150	141.2	19,2
LRL204-11/0.55	550	75.5	0.76	2900	1.33	40	65	50	170	80	90	320	250	121	-	110	110	125	M10	20	150	141.2	20,1
LRL204-12/1.5	1500	81.3	0.78	2900	3.3	40	75	49	234	113	121	373,5	320	149.5	90	40	50	160	M10	20	150	193	29,5
LRL204-13/2.2	2200	83.2	0.82	2900	4.52	40	75	49	234	113	121	373,5	320	149.5	90	40	50	160	M10	20	150	193	31,5
LRL204-15/3	3000	84.6	0.84	2900	6.05	40	75	49	234	113	121	408	320	169.5	90	40	50	160	M10	20	150	217	37,6
LRL204-16/4	4000	85.8	0.84	2900	7.77	40	75	49	234	113	121	439,5	320	174.5	90	40	50	160	M10	20	150	232	45,7
LRL205-11/0.75	750	77.4	0.81	2900	1.7	50	75	56	192	91	101	346	280	128	-	125	125	140	M10	20	150	146	27,2
LRL205-12/1,5	1500	81.3	0.78	2900	3.3	50	86	51	247	116	131	375,5	340	149.5	104	40	50	170	M10	20	150	193	32,5
LRL205-13/2,2	2200	83.2	0.82	2900	4.52	50	86	51	247	116	131	375,5	340	149.5	104	40	50	170	M10	20	150	193	34,5
LRL205-14/3	3000	84.6	0.84	2900	6.05	50	86	51	247	116	131	410	340	169.5	104	40	50	170	M10	20	150	217	40,6
LRL205-15/4	4000	85.8	0.84	2900	7.77	50	86	51	247	116	131	441,5	340	174.5	104	40	50	170	M10	20	150	232	48,7
LRL206-11/2.2	2200	83.2	0.82	2900	4.52	65	93	57	257	119	138	381,5	340	149.5	135	40	55	170	M10	20	150	193	37
LRL206-12/1.5	1500	81.3	0.78	2900	3.3	65	80	67	218	100	118	386,8	340	151	-	155	155	170	M10	20	150	193	34,6
LRL206-12/3	3000	84.6	0.84	2900	6.05	65	93	57	257	119	138	416	340	169.5	135	40	55	170	M10	20	150	217	43,1
LRL206-13/4	4000	85.8	0.84	2900	7.77	65	93	57	257	119	138	447,5	340	174.5	135	40	55	170	M10	20	150	232	51
LRL208-10,5/3	3000	84.6	0.84	2900	6.05	80	105	63	278	125	153	422	360	169.5	135	40	55	180	M10	20	150	217	46,9
LRL208-11/4	4000	85.8	0.84	2900	7.77	80	105	-	282	125	157	453	360	174.5	135	40	55	180	M10	20	150	232	57
LRL208-12/2.2	2200	83.2	0.82	2900	4.52	80	98	69	245	110	135	388,8	360	151	-	165	165	180	M10	20	150	193	41,5
LRL208-12/4	4000	85.8	0.84	2900	7.77	80	105	63	278	125	153	453,5	360	174.5	135	40	55	180	M10	20	150	232	55
LRL403-11/0.25	250	74	0.7	1450	0.69	32	70	55	207	101	106	297	260	120	90	40	50	130	M10	20	150	141.2	20
LRL403-16/0.25	250	74	0.7	1450	0.69	32	70	55	207	101	106	297	260	120	90	40	50	130	M10	20	150	141.2	20
LRL404-08/0.09	90	67.9	0.73	1500	0.26	40	65	65	146	68	78	272	250	107	-	110	110	125	M10	20	150	125	14,1
LRL404-11/0.12	120	69.7	0.72	1500	0.34	40	65	50	170	80	90	294	250	120	-	110	110	125	M10	20	150	141.2	18,1
LRL404-13/0.25	250	74	0.7	1450	0.69	40	75	49	234	113	121	291	320	120	90	40	50	160	M10	20	150	141.2	21
LRL404-15/0.37	370	76.1	0.71	1450	1.06	40	75	49	234	113	121	291	320	120	90	40	50	160	M10	20	150	141.2	22,2
LRL405-11/0.25	250	74	0.7	1450	0.69	50	75	56	192	91	101	298,5	280	120	-	125	125	140	M10	20	150	141.2	21,7
LRL405-12/0.25	370	76.1	0.71	1450	1.06	50	86	51	247	116	131	293	340	120	104	40	50	170	M10	20	150	141.2	24
LRL405-13/0.37	370	76.1	0.71	1450	1.06	50	86	51	247	116	131	293	340	120	104	40	50	170	M10	20	150	141.2	25,2
LRL405-15/0.55	550	78.1	0.71	1450	1.45	50	86	51	247	116	131	327	340	128	104	40	50	170	M10	20	150	185	29
LRL406-11/0.25	250	74	0.7	1450	0.69	65	93	57	257	119	138	299	340	120	135	40	55	170	M10	20	150	141.2	26,5
LRL406-12/0.37	370	76.1	0.71	1450	1.06	65	93	57	257	119	138	299	340	120	135	40	55	170	M10	20	150	141.2	27,7
LRL406-13/0.55	550	78.1	0.71	1450	1.45	65	93	57	257	119	138	333	340	128	135	40	55	170	M10	20	150	185	31,5
LRL408-12.5/0.75	750	79.6	0.72	1450	1.9	80	105	63	278	125	153	339	360	128	135	40	55	180	M10	20	150	185	36,4
LRL408-12/0.55	550	78.1	0.71	1450	1.45	80	105		282	125	157	338,5	360	128	135	40	55	180	M10	20	150	185	37.3
LRL408-14/1.1	1100	81.4	0.78	1450	2.5	80	105	63	278	125	153	372,5	360	146	135	40	55	180	M10	20	150	176.5	40,8

LRL - JRL

JRL: ELECTRICAL CHARACTERISTICS AND SIZES

DN	ØD	Øg	Øc	n x Ø
	mm	mm	mm	n x mm
32	140	100	76	4 x 19
40	150	110	84	4 x 19
50	165	125	99	4 x 19
65	185	145	118	4 x 19
80	200	160	132	8 x 19
100	220	180	156	8 x 19

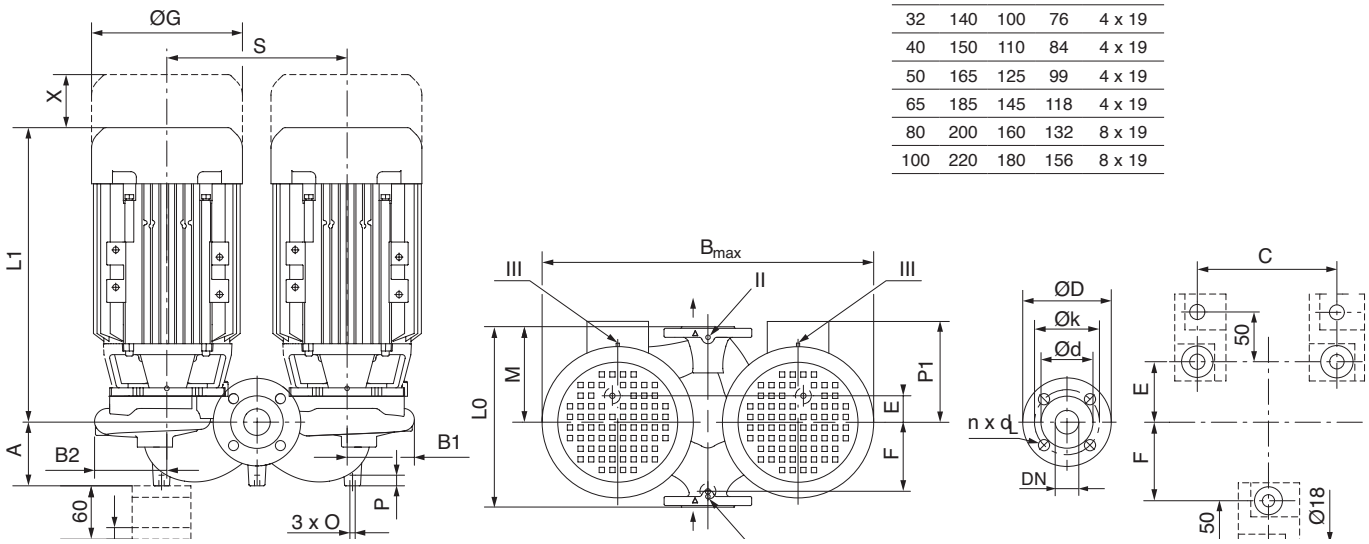

ORDER REFERENCE	MOTOR					PUMP																	
	P2	Efficiency of motor %	Power factor	Nominal speed	Nominal current (approx.)	DN	L0	L1	A	B max	B1	B2	P1	C	E	F	M	O	P	S	X	ØG	mass
	W	η	cos ϕ	rpm	in A	mm	mm	mm	mm	mm	mm	mm	mm	mm	mm	mm	mm	mm	mm	mm	mm	mm	kg
JRL203-09/0.37	370	72.8	0.78	1450 - 2900	0.86	32	260	321	70	410	100.5	104.5	121	225	56	106	136	M10	20	205	150	141.2	36.7
JRL203-10/0.55	550	75.5	0.76	1450 - 2900	1.33	32	260	321	70	410	100.5	104.5	121	225	56	106	136	M10	20	205	150	141.2	41.3
JRL203-11/0.75	750	77.4	0.81	1450 - 2900	1.7	32	260	341	70	410	100.5	104.5	128	225	56	106	136	M10	20	205	150	185	46.3
JRL203-13/1.1	1100	79.6	0.83	1450 - 2900	2.4	32	260	341	70	410	100.5	104.5	128	225	56	106	136	M10	20	205	150	185	47.5
JRL203-16/1.1	1100	79.6	0.83	1450 - 2900	2.4	32	260	341	70	410	100.5	104.5	128	225	56	106	136	M10	20	205	150	185	43.3
JRL204-09/0.37	370	72.8	0.78	1450 - 2900	0.86	40	250	320	75	349.5	85	91	121	225	35	97	135	M10	20	174	150	141.2	39.2
JRL204-11/0.55	550	75.5	0.76	1450 - 2900	1.33	40	250	320	75	349.5	85	91	121	225	35	97	135	M10	20	174	150	141.2	41
JRL204-12/1.5	1500	81.3	0.78	1450 - 2900	3.3	40	320	373,5	75	456	113	119	149.5	240	45	135	167	M10	20	224	150	193	58.5
JRL204-13/2.2	2200	83.2	0.82	1450 - 2900	4.52	40	320	373,5	75	456	113	119	149.5	240	45	135	167	M10	20	224	150	193	62.5
JRL204-15/3	3000	84.6	0.84	1450 - 2900	6.05	40	320	386	75	456	113	119	169.5	240	45	135	167	M10	20	224	150	217	74.7
JRL204-16/4	4000	85.8	0.84	1450 - 2900	7.77	40	320	419,5	75	456	113	119	174.5	240	45	135	167	M10	20	224	150	232	90.9
JRL205-11/0.75	750	77.4	0.81	1450 - 2900	1.7	50	280	346	83	390	95	101	128	228	50	107	155	M10	20	194	150	146	50.1
JRL205-12/1,5	1500	81.3	0.78	1450 - 2900	3.3	50	340	375,5	86	500	120	130	149.5	240	48	132	190	M10	20	250	150	193	60.3
JRL205-13/2,2	2200	83.2	0.82	1450 - 2900	4.52	50	340	375,5	86	500	120	130	149.5	240	48	132	190	M10	20	250	150	193	64.3
JRL205-14/3	3000	84.6	0.84	1450 - 2900	6.05	50	340	388	86	500	120	130	169.5	240	48	132	190	M10	20	250	150	217	84.3
JRL205-15/4	4000	85.8	0.84	1450 - 2900	7.77	50	340	421,5	86	500	120	130	174.5	240	48	132	190	M10	20	250	150	232	92.7
JRL206-11/2.2	2200	83.2	0.82	1450 - 2900	4.52	65	340	381,5	93	550	125	135	149.5	240	43	137	185	M10	20	290	150	193	71.8
JRL206-12/1.5	1500	81.3	0.78	1450 - 2900	3.3	65	340	386,8	93	431.5	103	116.5	151	225	25	137	185	M10	20	212	150	193	66
JRL206-12/3	3000	84.6	0.84	1450 - 2900	6.05	65	340	416	93	550	125	135	169.5	240	43	137	185	M10	20	290	150	217	84
JRL206-13/4	4000	85.8	0.84	1450 - 2900	7.77	65	340	447,5	93	550	125	135	174.5	240	43	137	185	M10	20	290	150	232	100.2
JRL208-10.5/3	3000	84.6	0.84	1450 - 2900	6.05	80	360	422	103	601	134	147	169.5	240	30	150	192	M10	20	320	150	217	87.2
JRL208-11/4	4000	85.8	0.84	1450 - 2900	7.77	80	360	454	103	601	134	147	174.5	240	30	150	192	M10	20	320	150	232	103
JRL208-12/2.2	2200	83.2	0.82	1450 - 2900	4.52	80	360	388,8	100	479.5	113	131.5	151	240	43	137	205	M10	20	235	150	193	76.2
JRL208-12/4	4000	85.8	0.84	1450 - 2900	7.77	80	360	454	103	601	134	147	174.5	240	30	150	192	M10	20	320	150	232	103.4
JRL208-12/5,5	5500		0.85	1450 - 2900	10.7	80	360	433,5	103	601	134	147	168	240	30	150	192	M10	20	320	150	232	105
JRL403-11/0.25	250	74	0.7	1450 - 2900	0.69	32	260	297	70	410	100.5	104.5	120	225	56	106	136	M10	20	205	150	141.2	35.3
JRL403-16/0.25	250	74	0.7	1450 - 2900	0.69	32	260	297	70	410	100.5	104.5	120	225	56	106	136	M10	20	205	150	141.2	34.3

JRL: ELECTRICAL CHARACTERISTICS AND SIZES

ORDER REFERENCE	MOTOR					PUMP																	
	P2	Efficiency of motor %	Power factor	Nominal speed	Nominal current (approx.)	DN	L0	L1	A	B max	B1	B2	P1	C	E	F	M	O	P	S	X	ØG	mass
	W	η	cos ϕ	rpm	in A	mm	mm	mm	mm	mm	mm	mm	mm	mm	mm	mm	mm	mm	mm	mm	mm	mm	kg
JRL404-13/0.25	**250**	**74**	**0.7**	**1450 - 2900**	**0.69**	**40**	**320**	**291**	**75**	**456**	**113**	**119**	**120**	**240**	**45**	**135**	**167**	**M10**	**20**	**224**	**150**	**141.2**	**41.5**
JRL404-15/0.37	370	76.1	0.71	1450 - 2900	1.06	40	320	291	75	456	113	119	120	240	45	135	167	M10	20	224	150	141.2	43.9
JRL405-11/0.25	250	74	0.7	1450 - 2900	0.69	50	280	298,5	83	390	95	101	120	228	50	107	155	M10	20	194	150	141.2	39.1
JRL405-13/0.37	370	76.1	0.71	1450 - 2900	1.06	50	340	293	86	500	120	130	120	240	48	132	190	M10	20	250	150	141.2	45.7
JRL405-15/0.55	550	78.1	0.71	1450 - 2900	1.45	50	340	327	86	500	120	130	128	240	48	132	190	M10	20	250	150	185	53.3
JRL406-11/0.25	250	74	0.7	1450 - 2900	0.69	65	340	299	93	550	125	135	120	240	43	137	185	M10	20	290	150	141.2	50.8
JRL406-12/0.37	370	76.1	0.71	1450 - 2900	1.06	65	340	299	93	550	125	135	120	240	43	137	185	M10	20	290	150	141.2	53.2
JRL406-13/0.55	550	78.1	0.71	1450 - 2900	1.45	65	340	333	93	601	125	135	128	240	43	137	185	M10	20	290	150	185	60.8
JRL408-12.5/0.75	750	79.6	0.72	1450 - 2900	1.9	80	360	339	103	601	134	147	128	240	43	150	185	M10	20	320	150	185	66.2
JRL408-12/0.55	550	78.1	0.71	1450 - 2900	1.45	80	360	339	103	601	134	147	128	240	43	150	185	M10	20	320	150	185	64
JRL408-14/1.1	110	81.4	0.78	1450 - 2900	2.5	80	360	372	103	601	134	147	146	240	43	150	185	M10	20	320	150	176.5	75

LRL - JRL

OPTIONS

Support of pump*

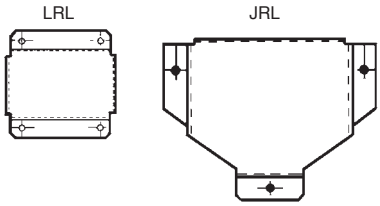

Sealing cap* for JRL

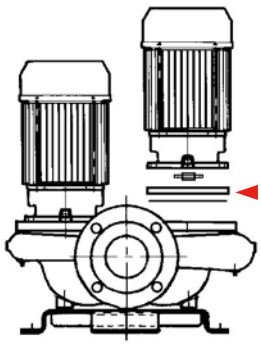

* Block the opening left by the removal of the hydraulics section and the motor. During repairs, operate on the backup pump.

cap + washer

Exchange moving parts: motor, impeller, lantern. CONTACT US

Model of pumps by family	Support of pump		Sealing cap for JRL	
	LRL	JRL	Order ref.	Item Ref.
203 - 16			COUV 160	30 908 178 F
204 - 12			COUV 120	30 925 165 P
204 - 16			COUV 160	30 908 178 F
205 - 12			COUV 120	30 925 165 P
205 - 16			COUV 160	30 908 178 F
206 - 12	30 925 701 Y	30 925 702 G	COUV 121	30 925 166 Y
206 - 16	30 925 700 P	30 925 702 G	COUV 160	30 908 178 F
208 - 12	30 925 700 P	30 925 702 G	COUV 121	30 925 166 Y
208 - 16	30 925 700 P	30 925 702 G	COUV 160	30 925 178 F
403 - 16 & 404 - 16			COUV 160	30 908 178 F
405 - 12			COUV 120	30 925 165 P
405 - 16			COUV 160	30 908 178 F
406 - 16 & 408 - 16	30 925 700 P	30 925 702 G	COUV 160	30 908 178 F

The families of pumps are indicated on the performance curves

MGP CONTROL BOX FOR JRL

- Controls motors and provides thermal protection.
- Safeguards operation by automatically starting the backup pump, if there is a fault on the pump in service.

For further information, see specific manual for MGP boxes.



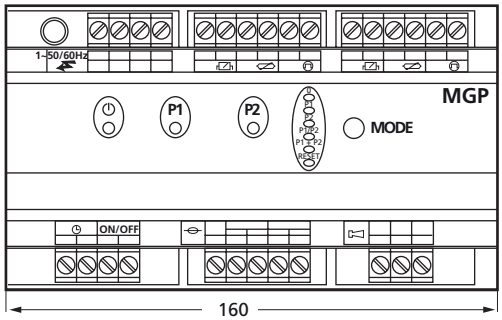

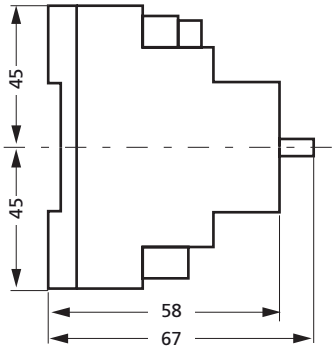

FEATURES

a) Electrical

- THREE-PHASE 230 - 400 V - 50 Hz moteur ≤3kW.
- THREE-PHASE 400 V Δ - 50 Hz moteur = 4kW.
- Motor protected by slave switch on the LRL and MGP box on the JRL.

b) Installation

- Directly onto horizontal or vertical pipework.
- Connect to the installation by round soldered backflanges nominal press. 10 (not provided).
- The system must provide protection of the pump against bad weather and frost (do not expose to direct sunlight or rain).

Option

Pump support to be fixed to concrete blockwork for nominal diameter 65 and 80 models (contact us for further details for other types).

c) Packaging

Pumps delivered with joints and bolts, without backflanges (optional extra).

d) Maintenance

Standard repair or exchange of the complete pump; see recommended spare parts
(•) subject to wear.

ACCESSORIES

- Slave switch of protection motor (LRL)
- Control and protection box (JRL)
- Sealing cap (JRL)
- Pressure measurement kit
- Round backflanges to solder on PN10
- Shut-off valves
- Metal rain cover (to be specified when ordering).

RANGE OF USE

Flows up to:	**200 m³/h**
Manometric head up to:	**52 m**
Maximum working pressure:	**10 bar**
Temperature range:	**– 10° to + 110°C**
nominal diameter ports:	**32 to 100**
MEI* of reference:	**≥ 0,10**

*Minimum Efficiency Index

LRN - JRN

SINGLE AND DOUBLE IN-LINE PUMPS

Heating - Air conditioning

50 Hz

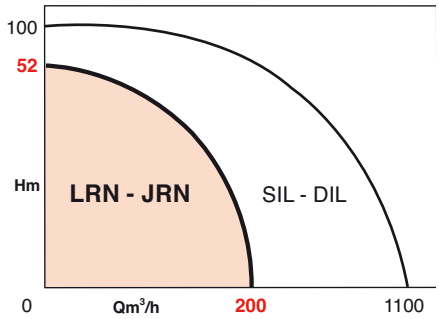

APPLICATIONS

- Heating multiple dwellings
- Air conditioning

Many industrial and agricultural applications.

- Heating greenhouses
- Transferring antifreeze
- Circulating iced water.

ADVANTAGES

- **Low electrical consumption.**
- **Mounts directly onto horizontal or vertical pipework.**
- **Not coupled: no need to align the shafts.**
- **Device to de-aerate the mechanical seal.**
- **Easy and quick to install.**
- **Practically zero maintenance.**

JRN

- **A backup pump permanently available.**
- **The two pumps can be operated in parallel to increase the flow.**
- **Manual or automatic pump switchover by MGP box .**

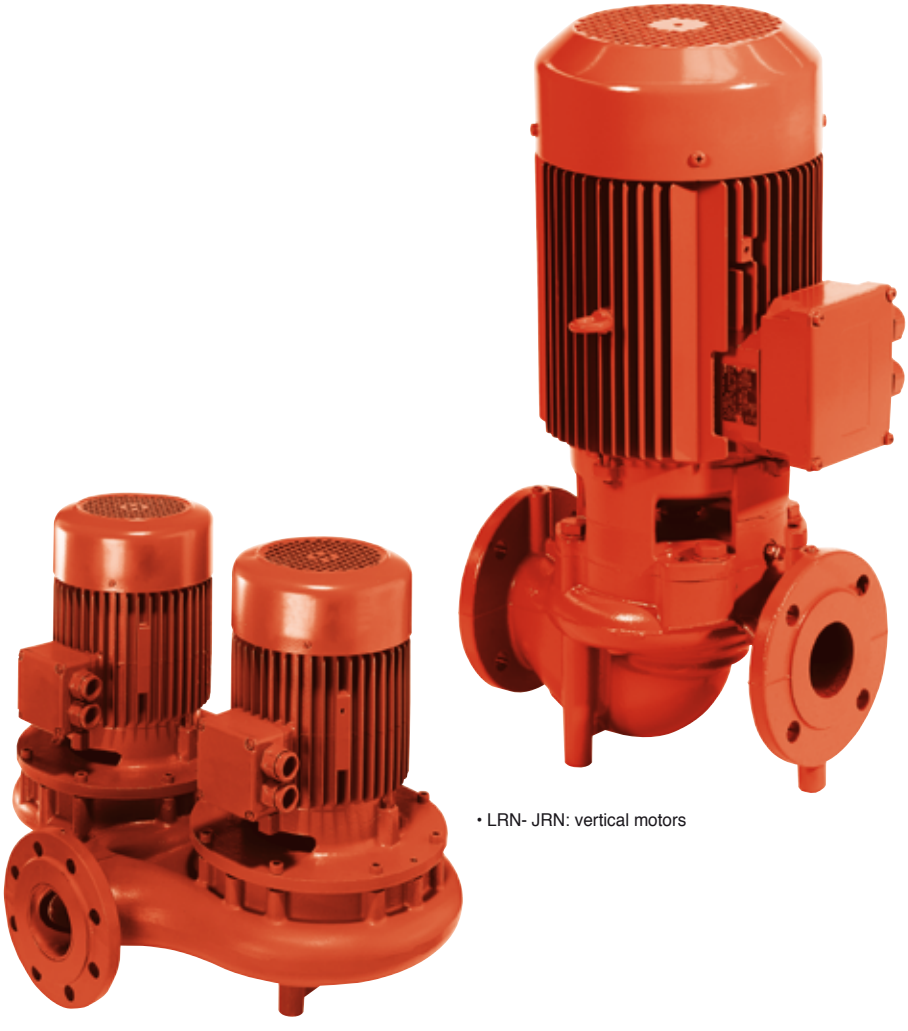

- LRN- JRN: vertical motors

LRN - JRN

DESIGN

• Hydraulic part
- Centrifugal, single-stage.
- Intake and outlet ports in line.
- Flanged pump housing with ports for connecting pressure gauges.
- Bearing lantern linking pump to motor.
- Dynamically balanced impeller, mounted directly on the shaft of the motor.
- Waterproof mechanical seal.

JRN
- Double pump in one housing.
- The two pumps are hydraulically separated by silent-operating valve.

• Motor
- IE2
- One end of shaft lengthened.
- The rotor shaft's guide bearings selected for silent operation.

Speed:	2900 rpm
3 ~ winding = 3kW:	230 V Δ
	400 V Y
Three-phase ≥ 4kW:	400 V Δ
Frequency:	50 Hz (option 60 Hz)
Insulation class:	155 (F)
Protection class:	IP 55
EC Compliant:	EN 809

BASIC CONSTRUCTION

Main components	Material
Pump housing	Cast iron EN GJL 250
Bearing lantern	Cast iron EN GJL 250
Shaft	Steel X20 - Cr13
Mechanical seal	Graphite/ Carbide Si/EP
Impeller	Cast iron EN GJL 200

IDENTIFICATION

LRN 2 05 - 17/7.5

JRN

single/double pump

2 = 2 pole: 2900 rpm
4 = 4 pole: 1450 rpm

Nominal diam. of ports (cm)

Nominal diam. of the impeller (cm)

Motor power (kW)

LRN - PLAN AND CROSS-SECTION

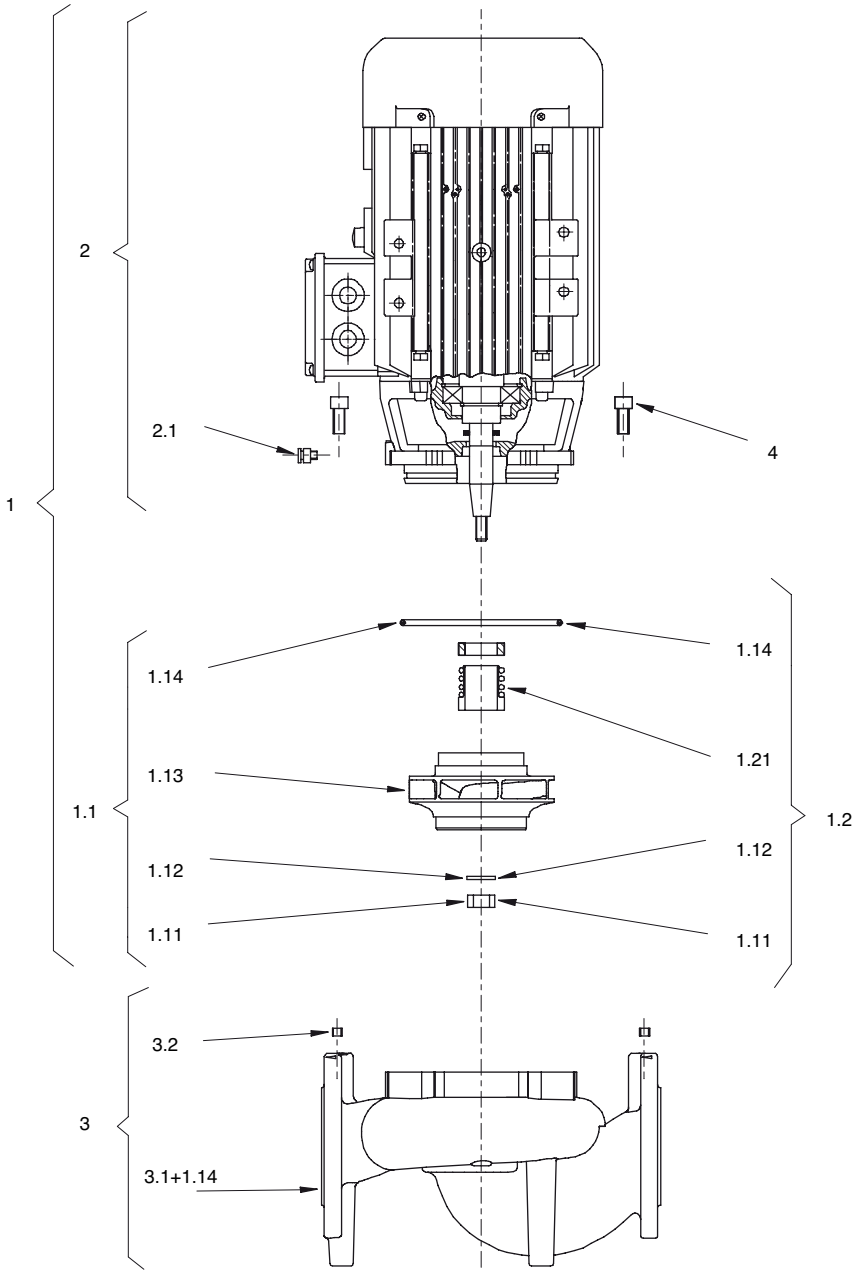

LRN

PART LIST

• common to LRN - JRN

1. Complete replacement kit
1.1 Set of spare parts for impeller with
- 1.11 Nut
- 1.12 Washer
- 1.13 Impeller
- 1.14 O-ring

1.2 Set of spare parts for mechanical seal with:
- 1.11 Nut
- 1.12 Washer
- 1.14 O-ring
- 1.21 Complete mechanical seal

2. Replacement motor kit
- 2.1 Air bleed screw

3. Complete pump housing with
- 3.1 Pump housing (LRN, JRN)
- 3.2 Bouchon pour prise de pression
- 3.3 Directional valve ≤nominal diameter 80 (JRN pumps only)
- 3.4 Directional valve ≥nominal diameter 100 (JRN pumps only)

4. Retaining screw for flange of the motor / pump housing (also included in the motor kit).

JRN - PLAN AND CROSS-SECTION

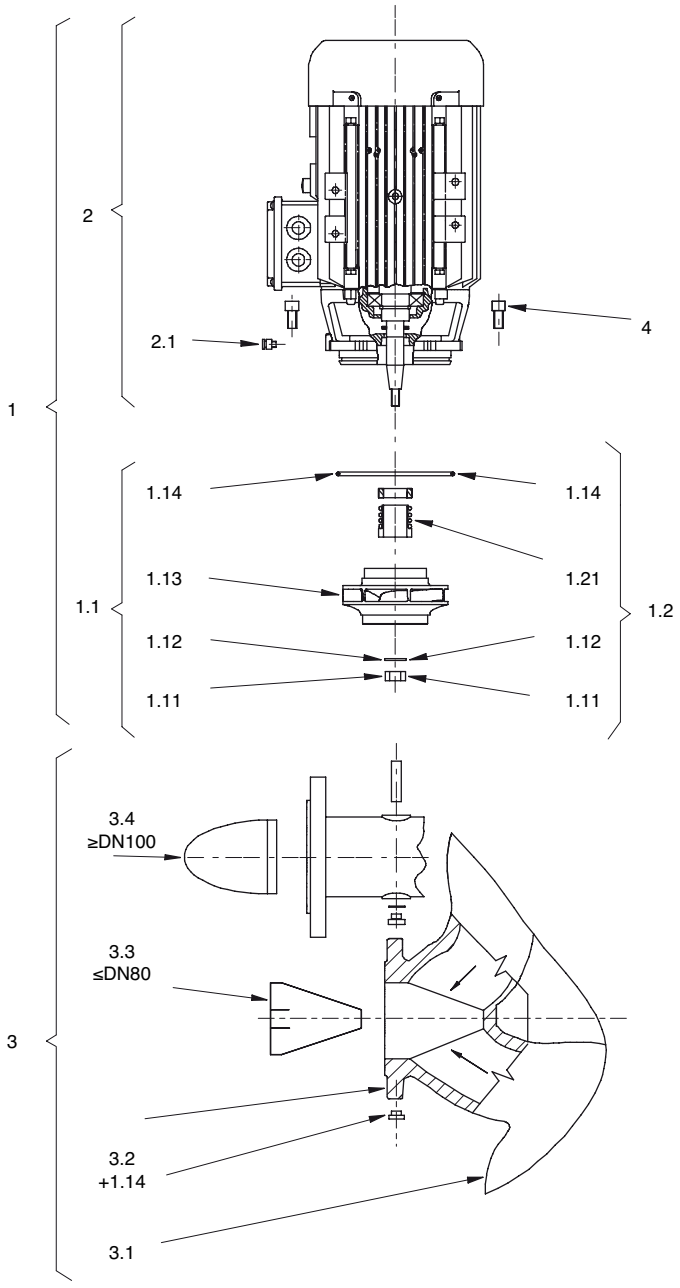

JRN

LRN - JRN

LRN - GENERAL PRESELECTION DIAGRAMS

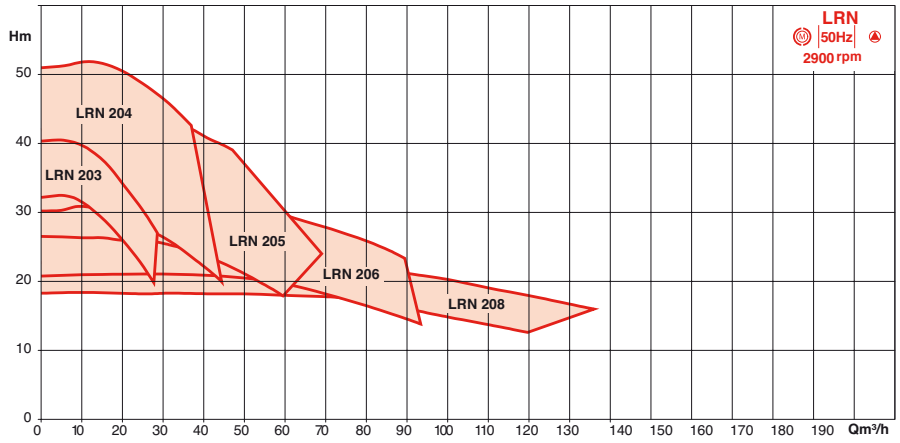

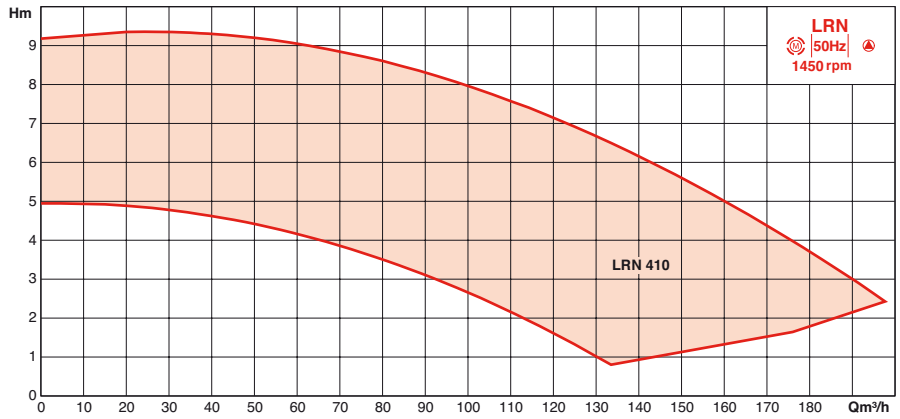

FITTING POSITIONS

mounted directly onto horizontal or vertical pipework

Pay attention to the position of the bleed screw: always upwards.

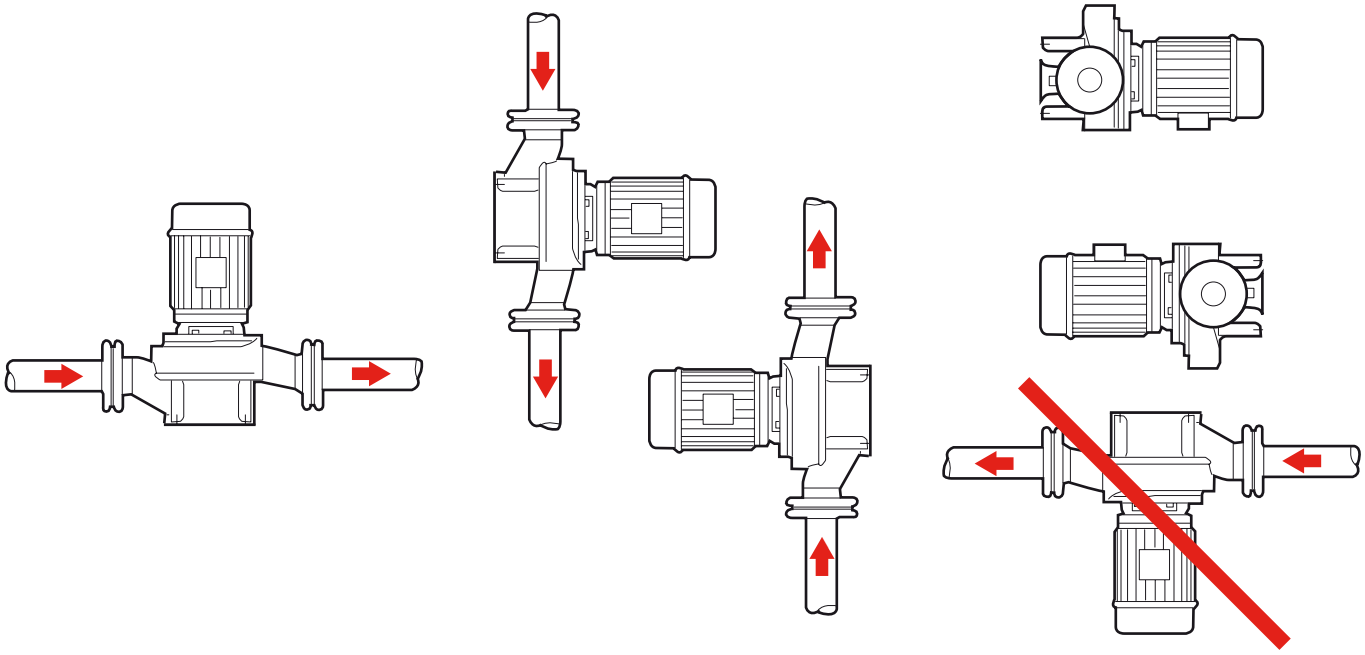

LRN - GENERAL PRESELECTION DIAGRAMS

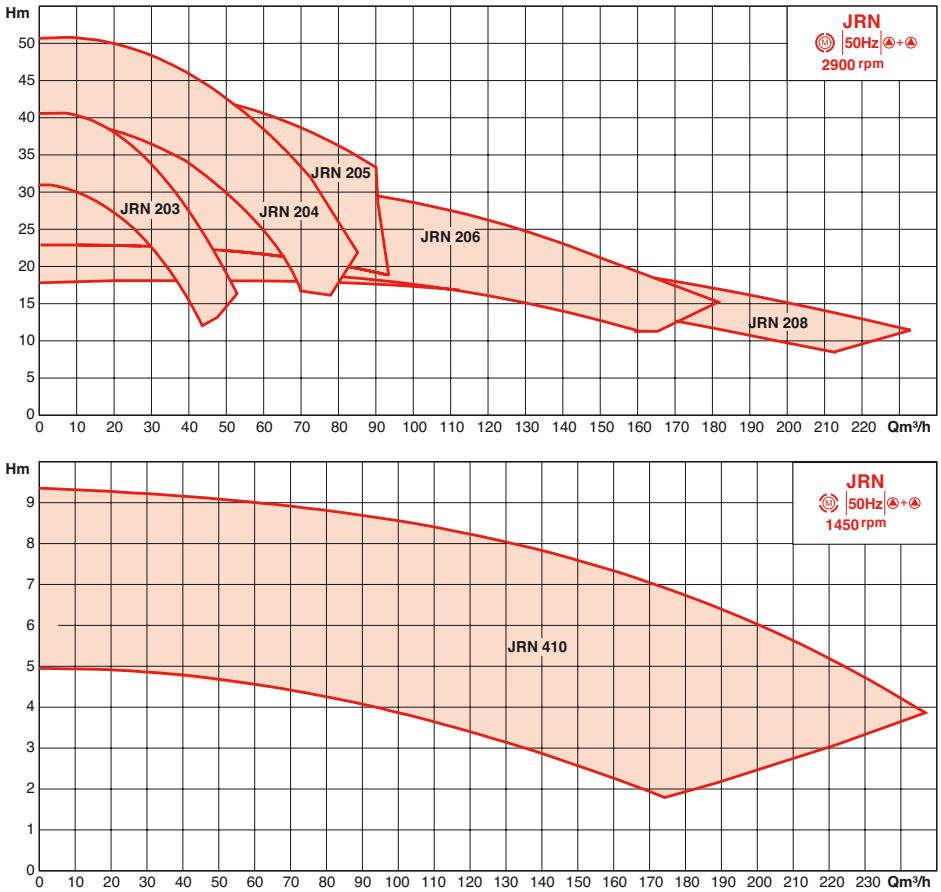

FITTING POSITIONS

mounted directly onto horizontal or vertical pipework

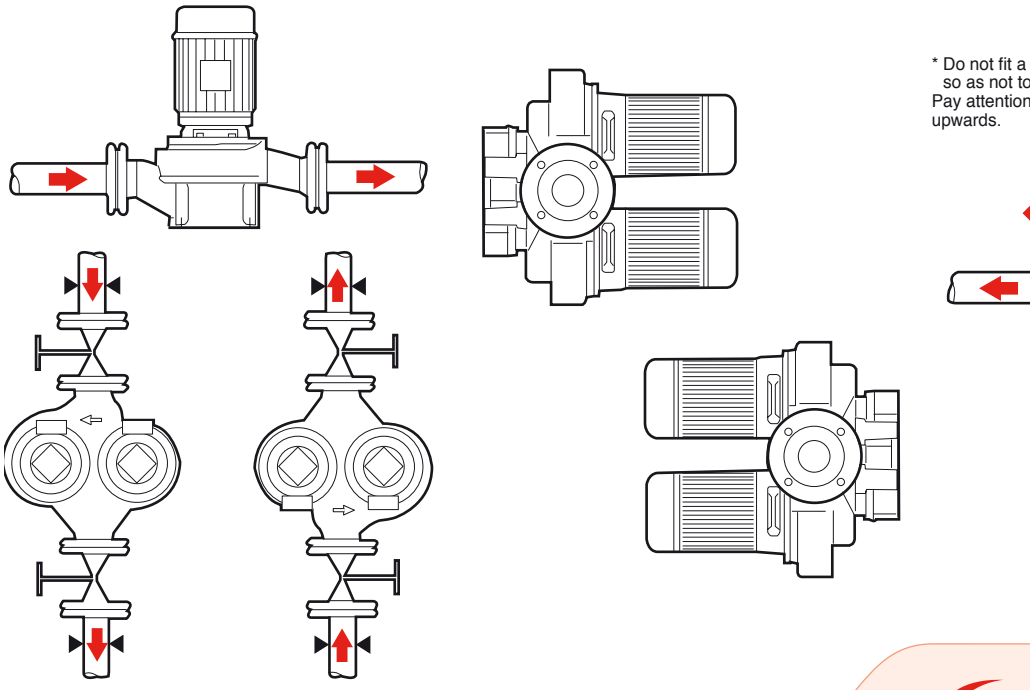

* Do not fit a butterfly valve directly onto the outlet flange so as not to hamper the operation of the valve.
Pay attention to the position of the bleed screw: always upwards.

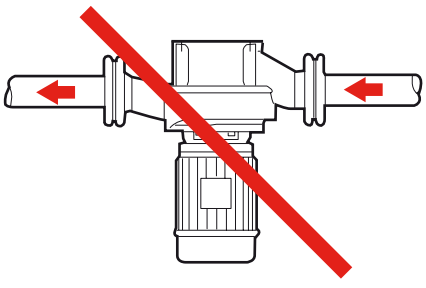

LRN - JRN

HYDRAULIC PERFORMANCE LRN 2-POLE

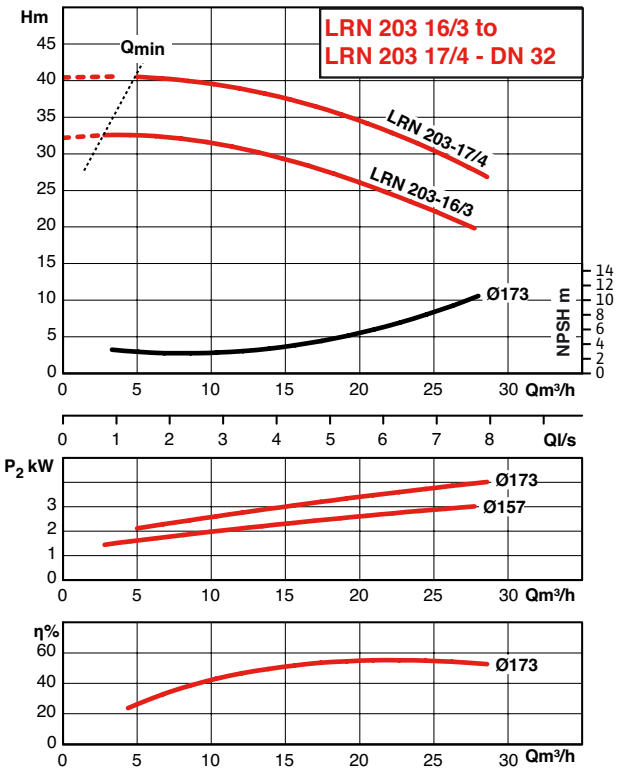

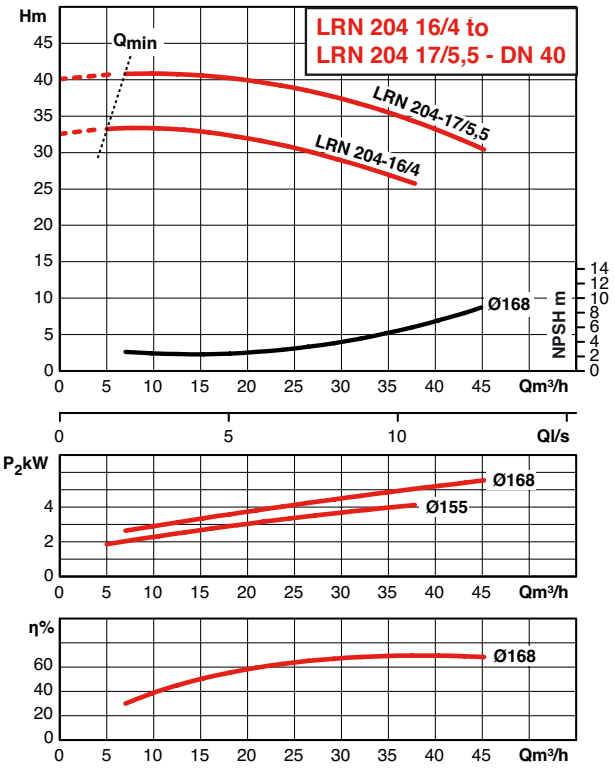

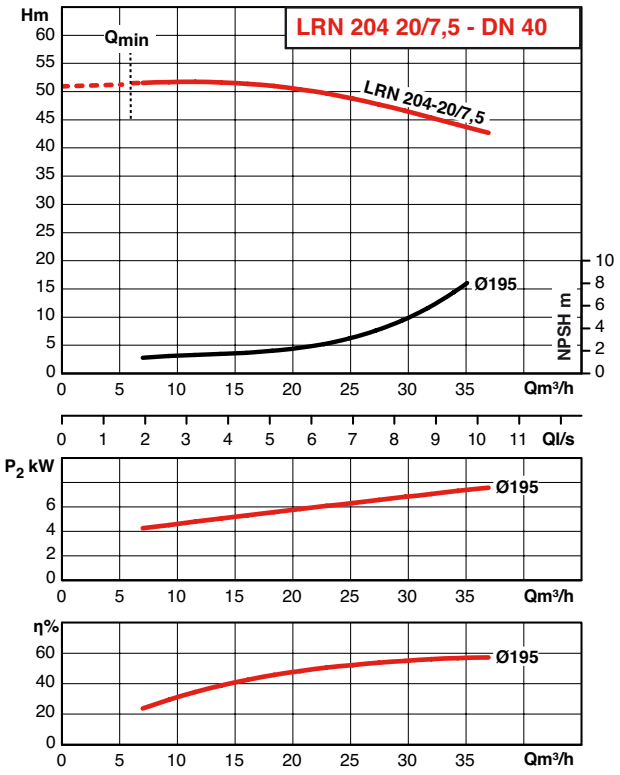

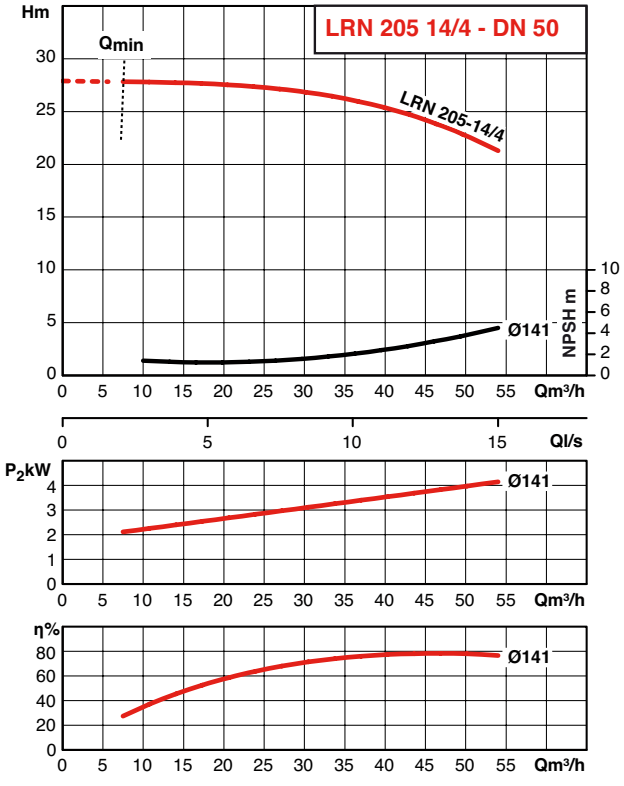

HYDRAULIC PERFORMANCE LRN 2-POLE

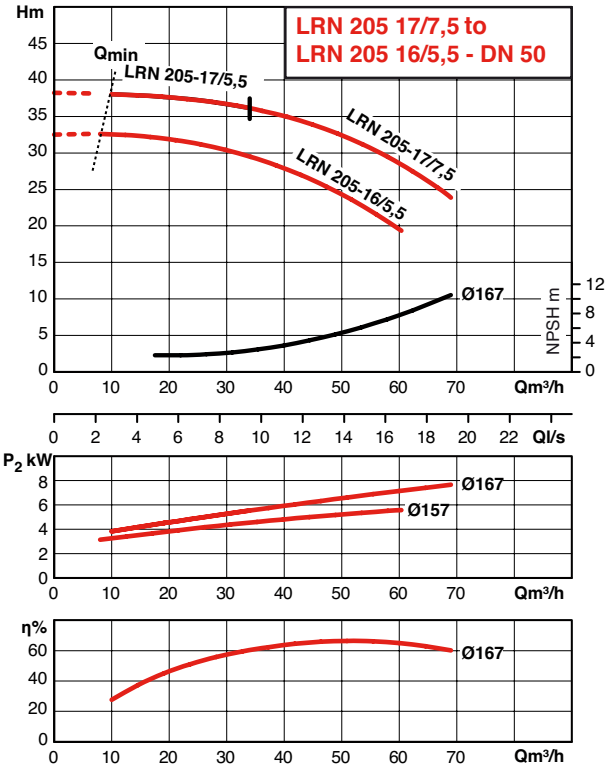

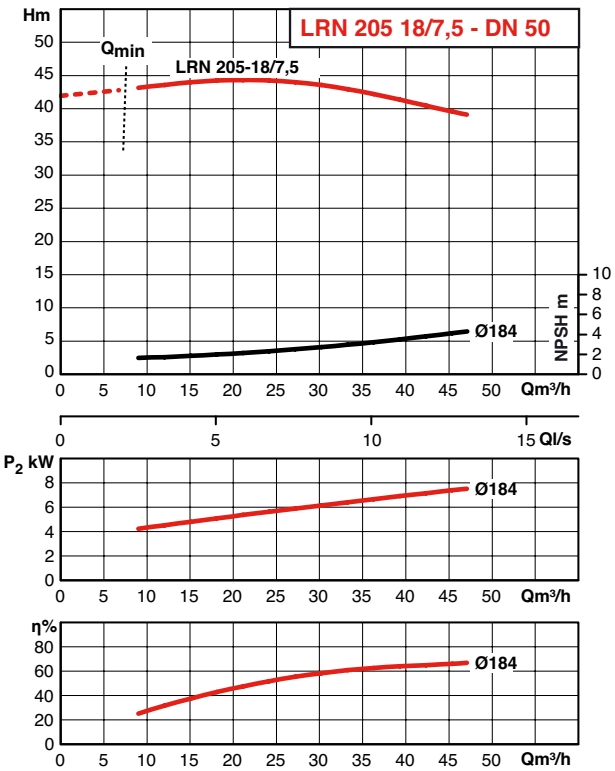

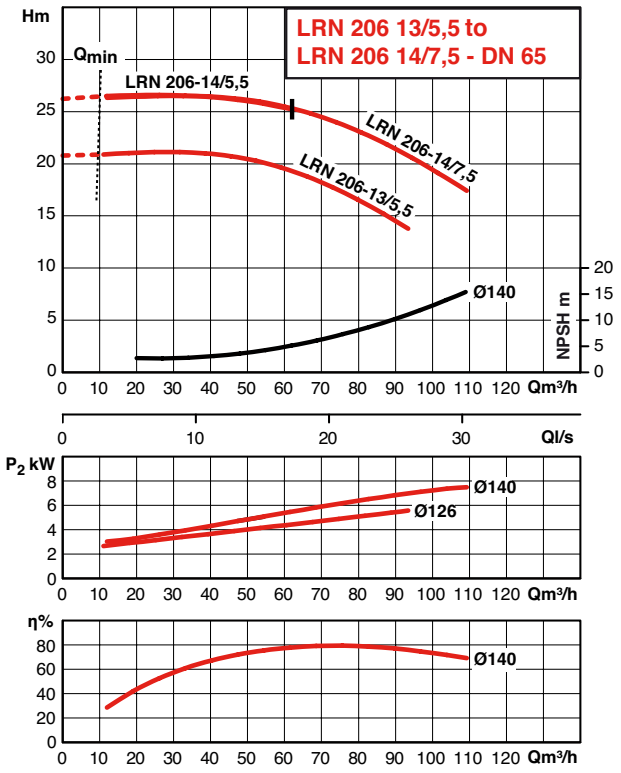

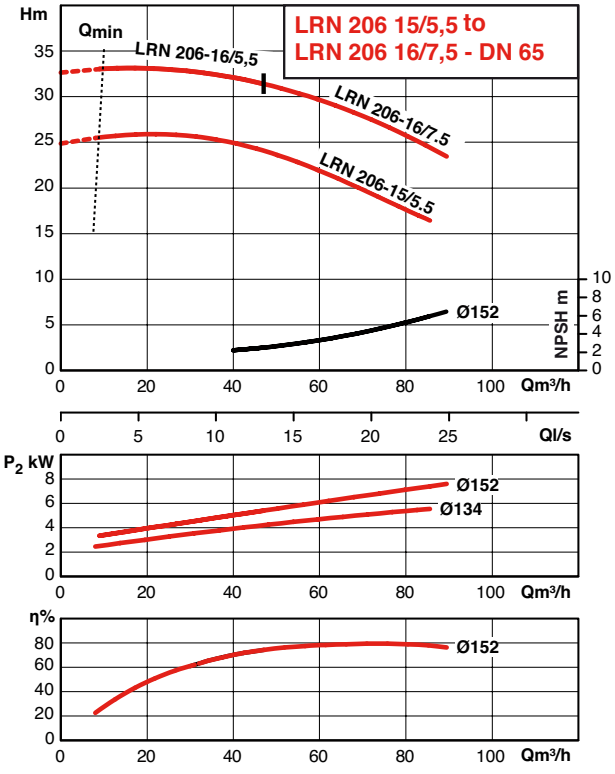

LRN - JRN

HYDRAULIC PERFORMANCE LRN 2-POLE

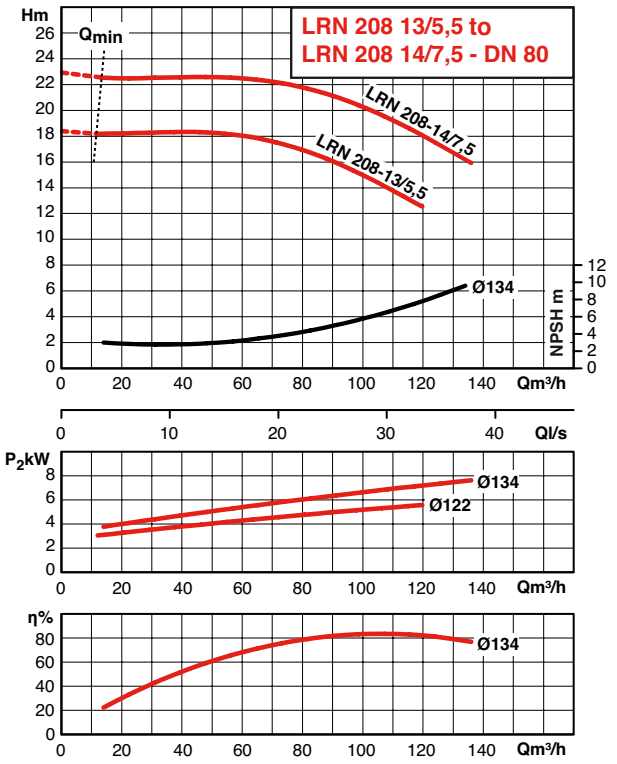

HYDRAULIC PERFORMANCE LRN 4-POLE

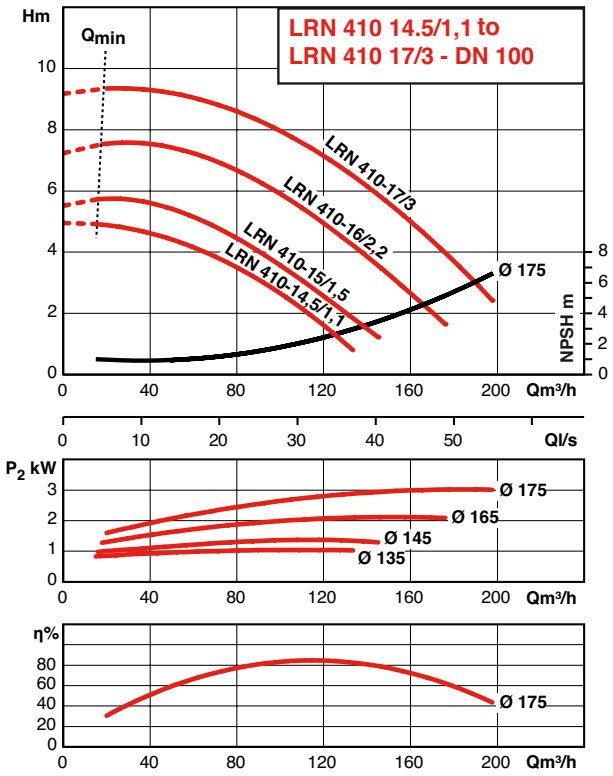

HYDRAULIC PERFORMANCE JRN 2 POLE

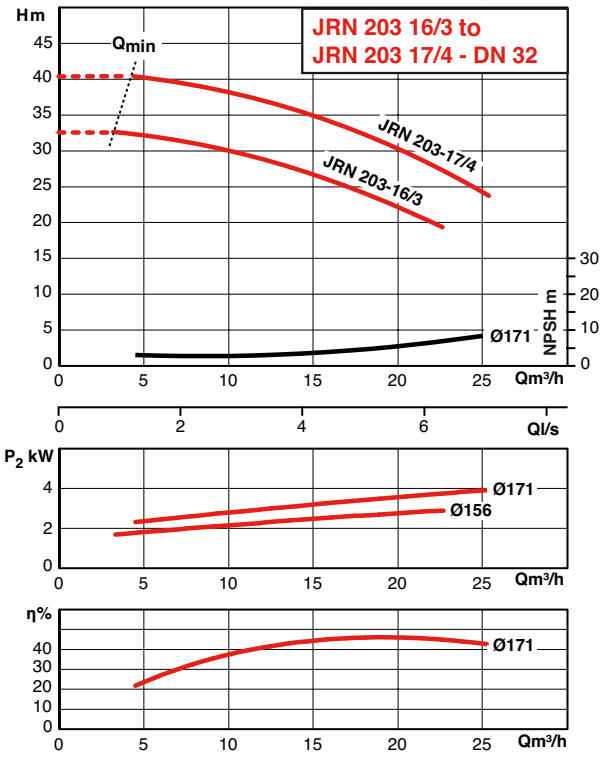

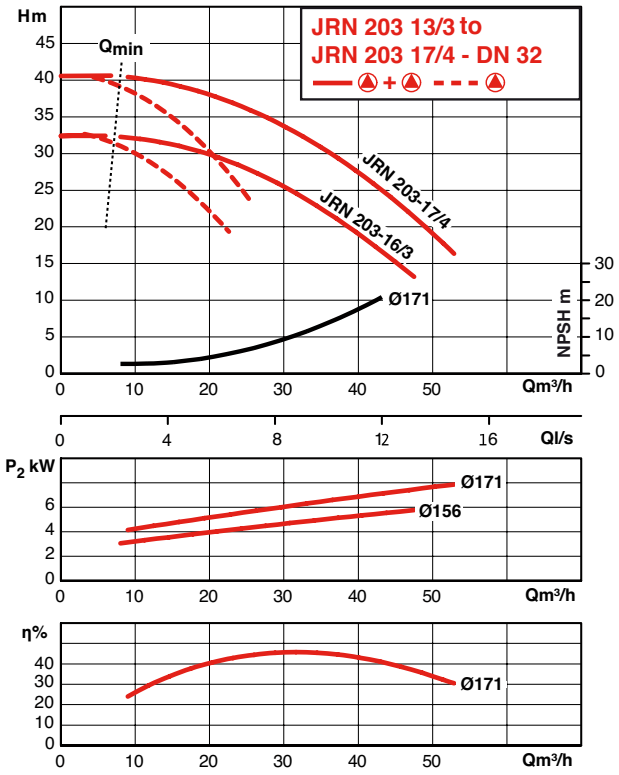

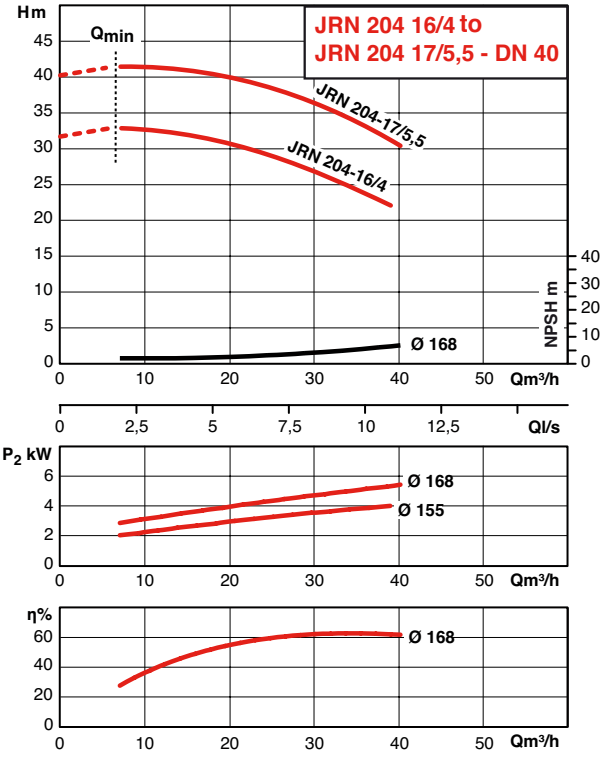

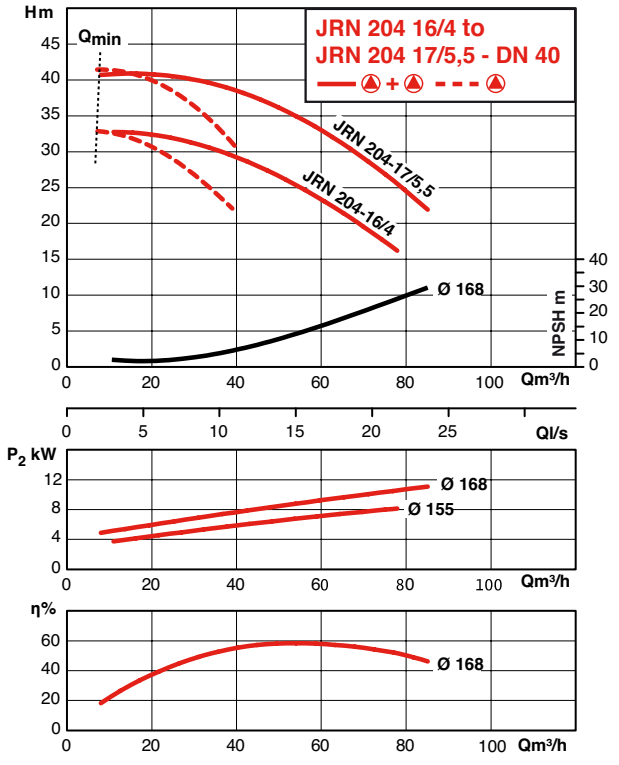

LRN - JRN

HYDRAULIC PERFORMANCE JRN 2 POLE

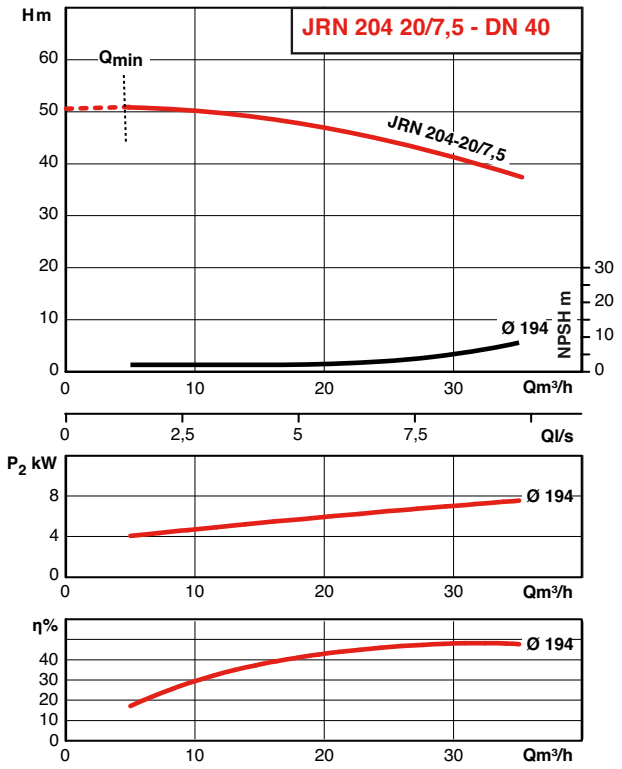

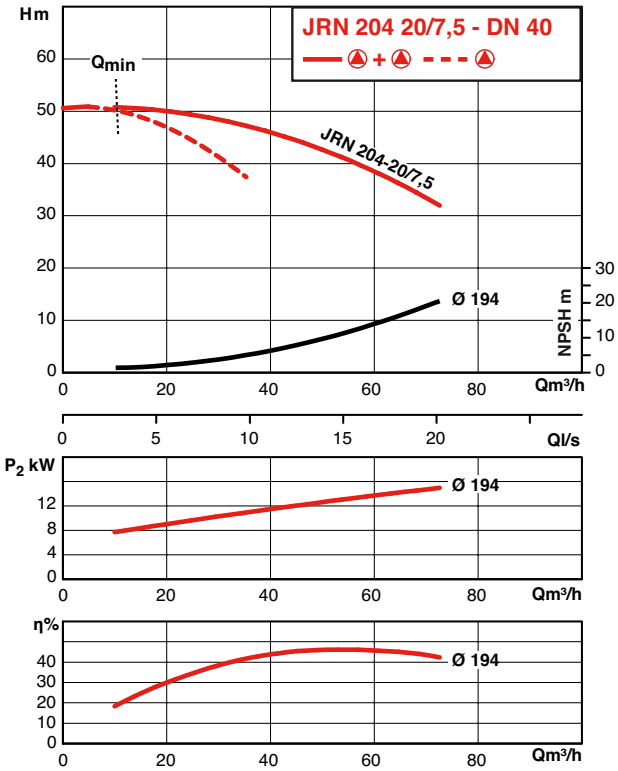

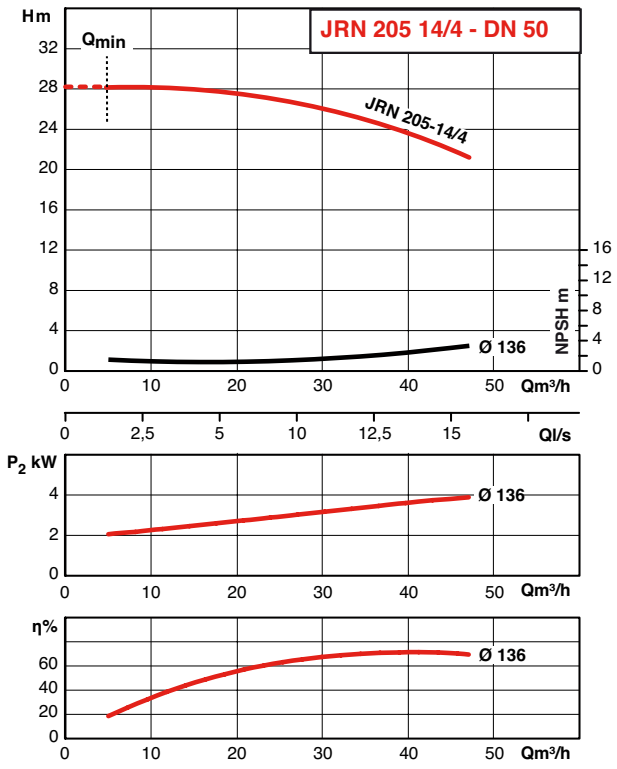

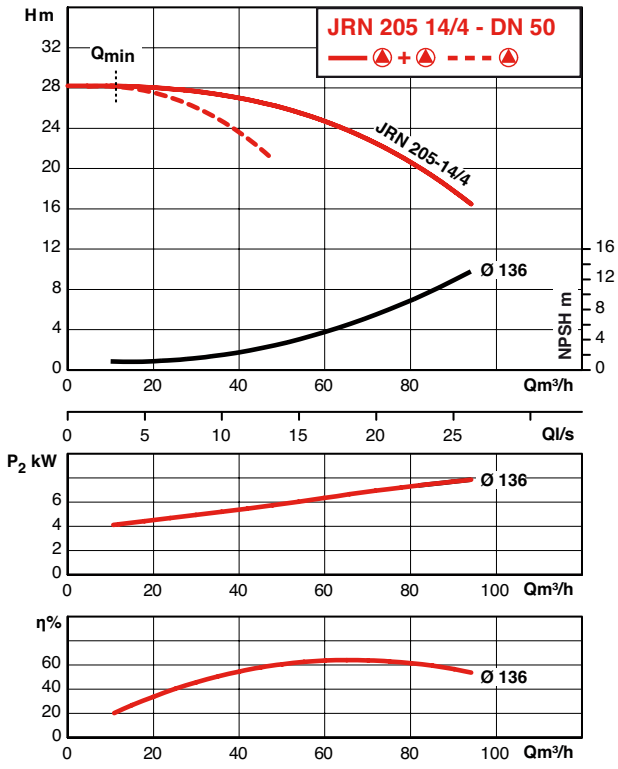

HYDRAULIC PERFORMANCE JRN 2 POLE

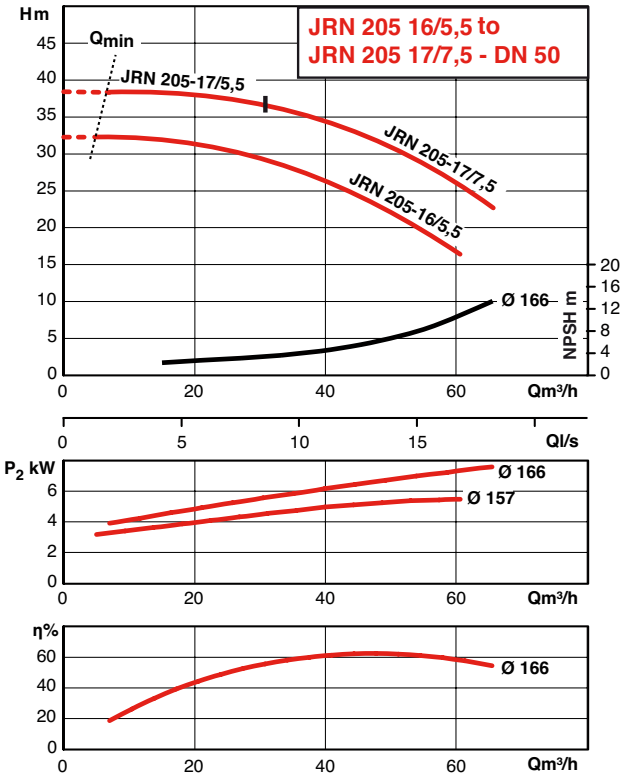

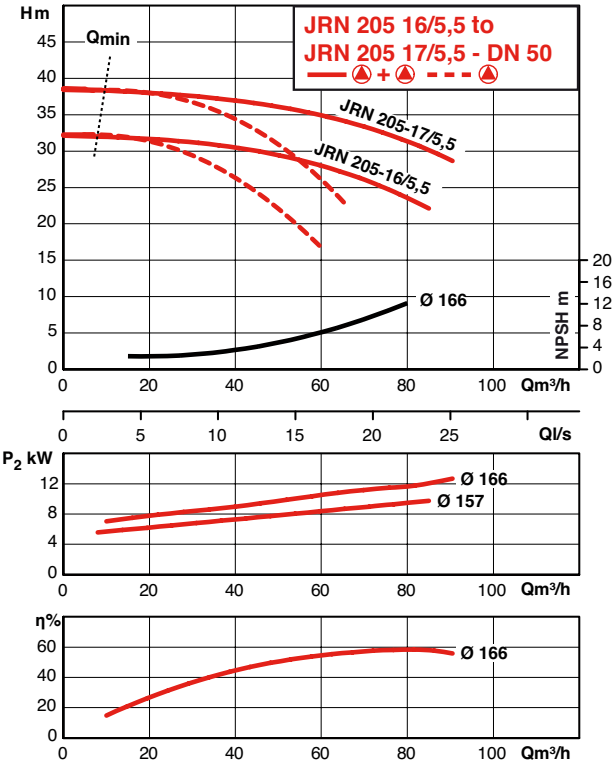

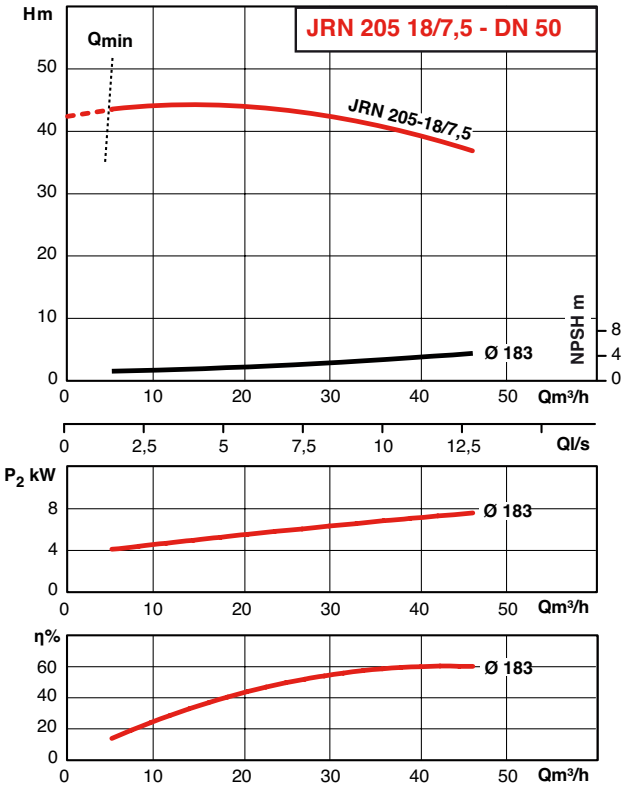

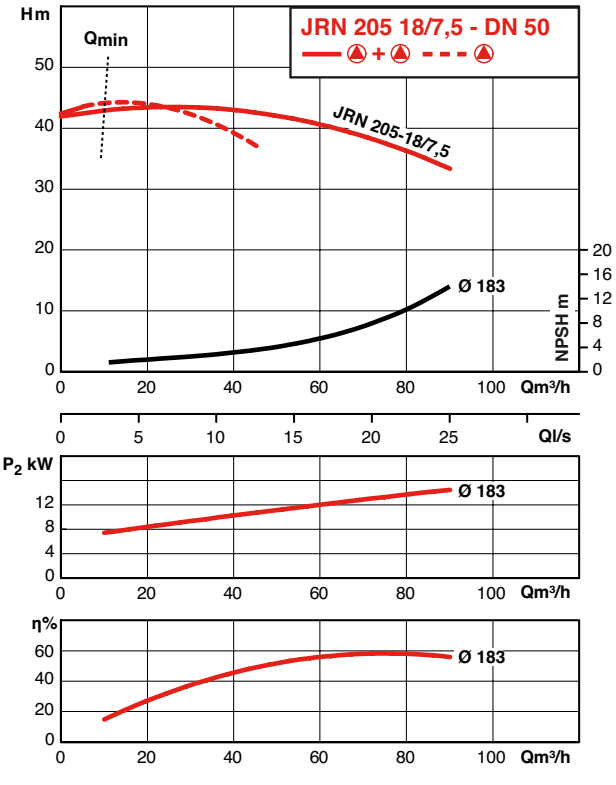

HYDRAULIC PERFORMANCE JRN 2 POLE

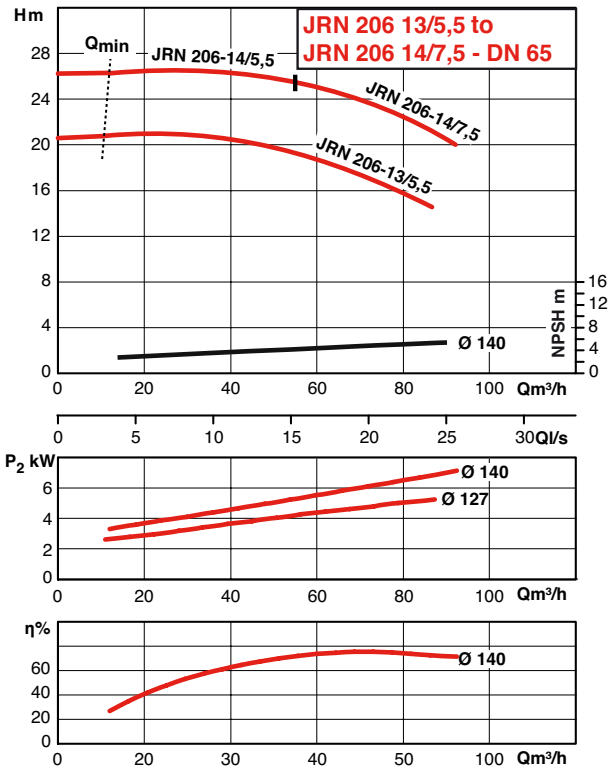

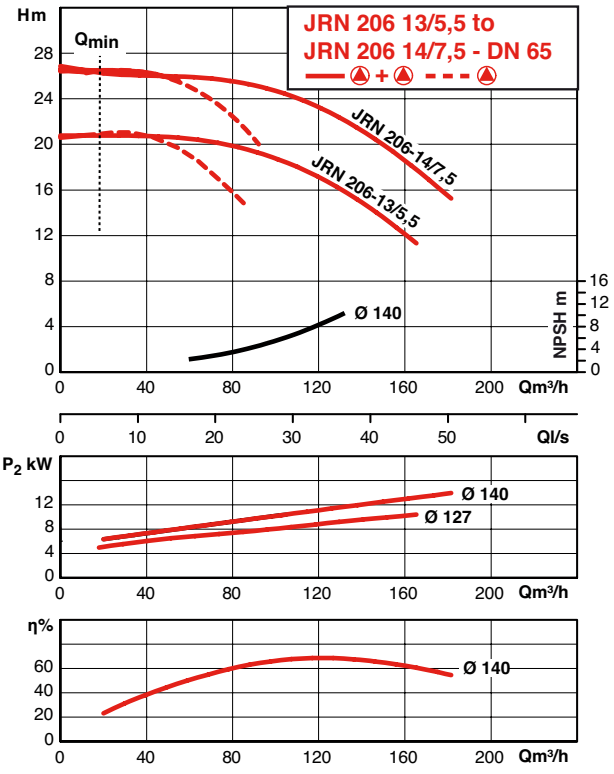

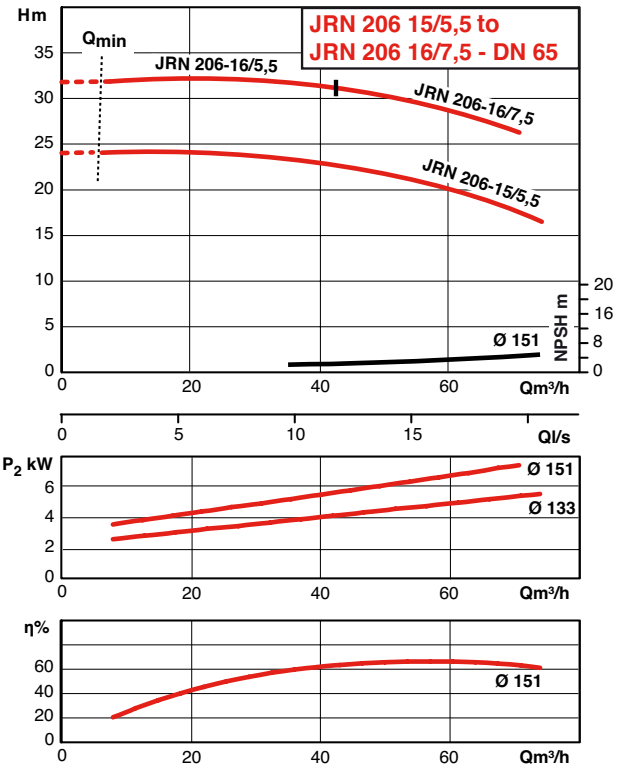

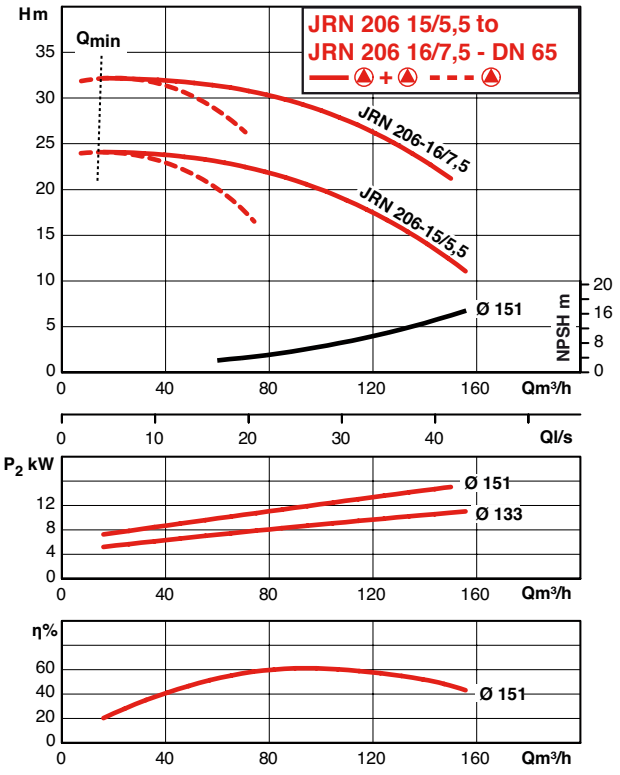

HYDRAULIC PERFORMANCE JRN 2 POLE

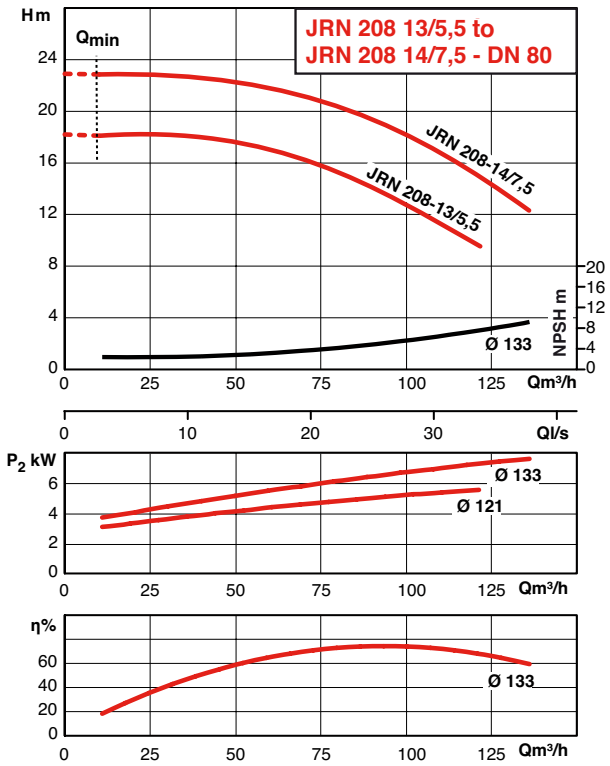

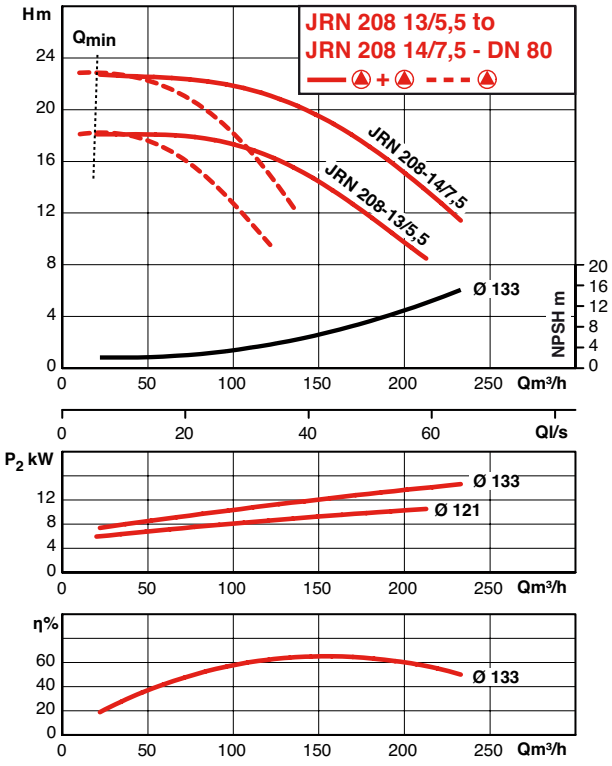

HYDRAULIC PERFORMANCE JRN 4 POLE

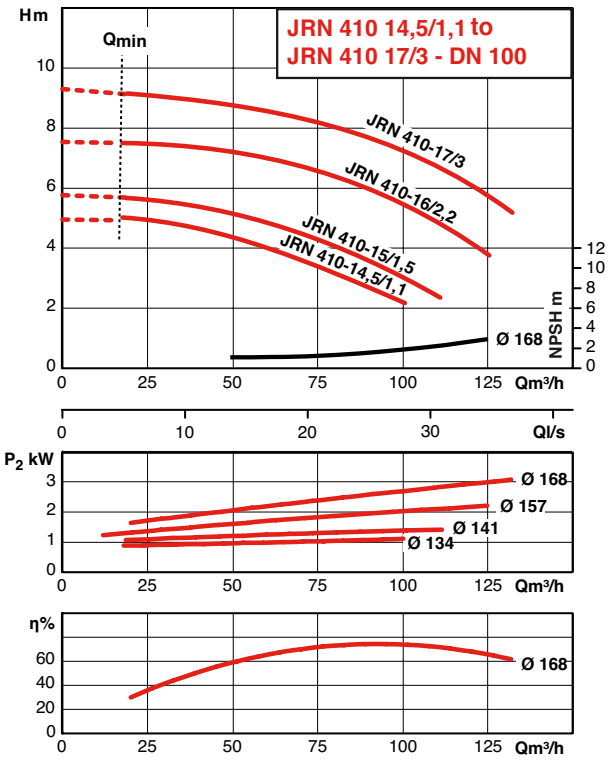

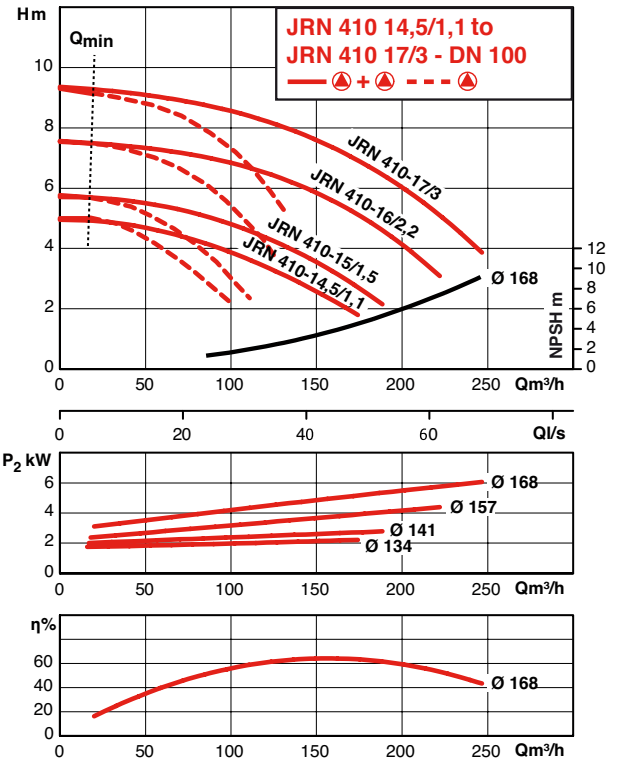

LRN - JRN

LRN - ELECTRICAL CHARACTERISTICS AND SIZES

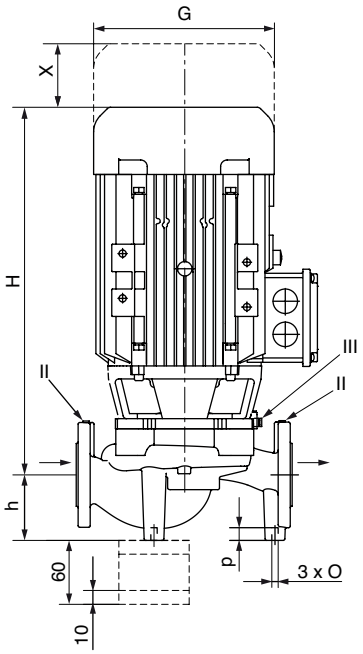

II: pressure port G1/8
III: drain port G1/8

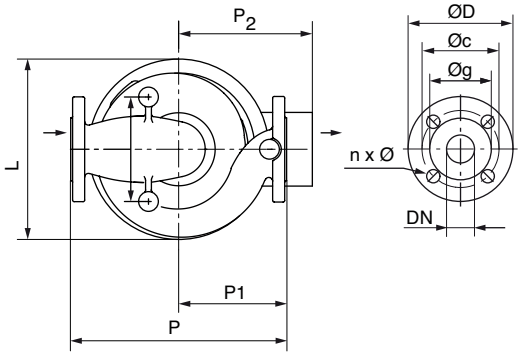

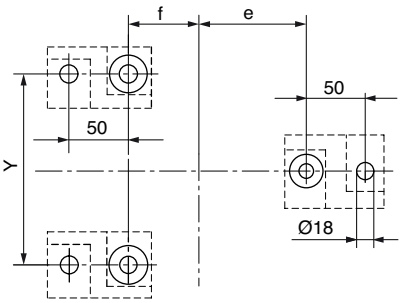

DN	ØD	Øg	Øc	n x Ø
	mm	mm	mm	n x mm
32	140	76	100	4 x 19
40	150	84	110	4 x 19
50	165	99	125	4 x 19
65	185	118	145	4 x 19
80	200	132	160	8 x 19
100	220	156	180	8 x 19

*Check the information plate on the motor when setting the thermal overload level.

ORDER REFERENCE	MOTOR				PUMP													
	P2	Intensity* 3 ~ 400	Efficiency	Cos ϕ	DN	h	L	Y	e	f	P	H	P1	O	p	P2	X	G	mass
	kW	A				mm	mm	mm	mm	mm	mm	mm	mm	mm	mm	mm	mm	mm	kg
LRN203-16/3	3	5.8	84.6	0.88	32	100	236	120	132	68	320	396	155	M10	20	160	150	217	46,1
LRN203-17/4	4	7.7	85.8	0.87	32	100	236	120	132	68	320	412	155	M10	20	168	150	232	53,4
LRN204-16/4	4	7.7	85.8	0.87	40	82	242	130	149	58	340	426	170	M10	20	168	150	232	57,3
LRN204-17/5,5	5,5	10.2	87.0	0.87	40	82	242	130	149	58	340	446	170	M10	20	168	150	279	68,6
LRN204-20/7,5	7,5	13.7	88.1	0.89	40	110	294	180	172	78	440	520	190	M10	20	188	150	279	80,6
LRN205-14/4	4	7.7	85.8	0.87	50	105	232	140	130	40	340	463	150	M10	20	168	150	232	63,2
LRN205-16/5,5	5,5	10.2	87.0	0.87	50	103	279	164	143	48	340	526	170	M10	20	188	150	279	74
LRN205-17/5,5	5,5	10.2	87.0	0.87	50	103	279	164	143	48	340	526	170	M10	20	188	150	279	74,2
LRN205-17/7,5	7,5	13.7	88.1	0.89	50	103	279	164	143	48	340	526	170	M10	20	188	150	279	76,2
LRN205-18/7,5	7,5	13.7	88.1	0.89	50	120	295	160	170	70	440	521	190	M10	20	188	150	279	83
LRN206-13/5,5	5,5	10.2	87.0	0.87	65	120	279	140	140	60	340	531	160	M12	20	188	150	279	74,2
LRN206-14/5,5	5,5	10.2	87.0	0.87	65	120	279	140	140	60	340	531	160	M12	20	188	150	279	74,4
LRN206-14/7,5	7,5	13.7	88.1	0.89	65	120	279	140	140	60	340	531	160	M12	20	188	150	279	82,4
LRN206-15/5,5	5,5	10.2	87.0	0.87	65	110	279	180	195	60	430	532	215	M12	20	188	150	279	78,2
LRN206-16/5,5	5,5	10.2	87.0	0.87	65	110	279	180	195	60	430	532	215	M12	20	188	150	279	78,5
LRN206-16/7,5	7,5	13.7	88.1	0.89	65	110	279	180	195	60	430	532	215	M12	20	188	150	279	84,5
LRN208-13/5,5	5,5	10.2	87.0	0.87	80	105	279	180	173	57	400	548	200	M12	20	188	150	279	81,1
LRN208-14/7,5	7,5	13.7	88.1	0.89	80	105	279	180	173	57	400	548	200	M12	20	188	150	279	89,3
LRN410-14,5/1,1	1,1	2.45	81.4	0.8	100	120	356	200	226	60	500	398	250	M12	20	147,5	150	177	68,3
LRN410-15/1,5	1,5	3.3	82.8	0.79	100	120	356	200	226	60	500	423	250	M12	20	147,5	150	177	70,8
LRN410-16/2,2	2,2	4.7	84.3	0.8	100	120	356	200	226	60	500	450	250	M12	20	154,5	150	196	76,7
LRN410-17/3	3	6.1	85.5	0.83	100	120	356	200	226	60	500	450	250	M12	20	154,5	150	196	84,1

JRN - ELECTRICAL CHARACTERISTICS AND SIZES

DN	ØD	Øg	Øc	n x Ø
	mm	mm	mm	n x mm
32	140	76	100	4 x 19
40	150	84	110	4 x 19
50	165	99	125	4 x 19
65	185	118	145	4 x 19
80	200	132	160	8 x 19
100	220	156	180	8 x 19

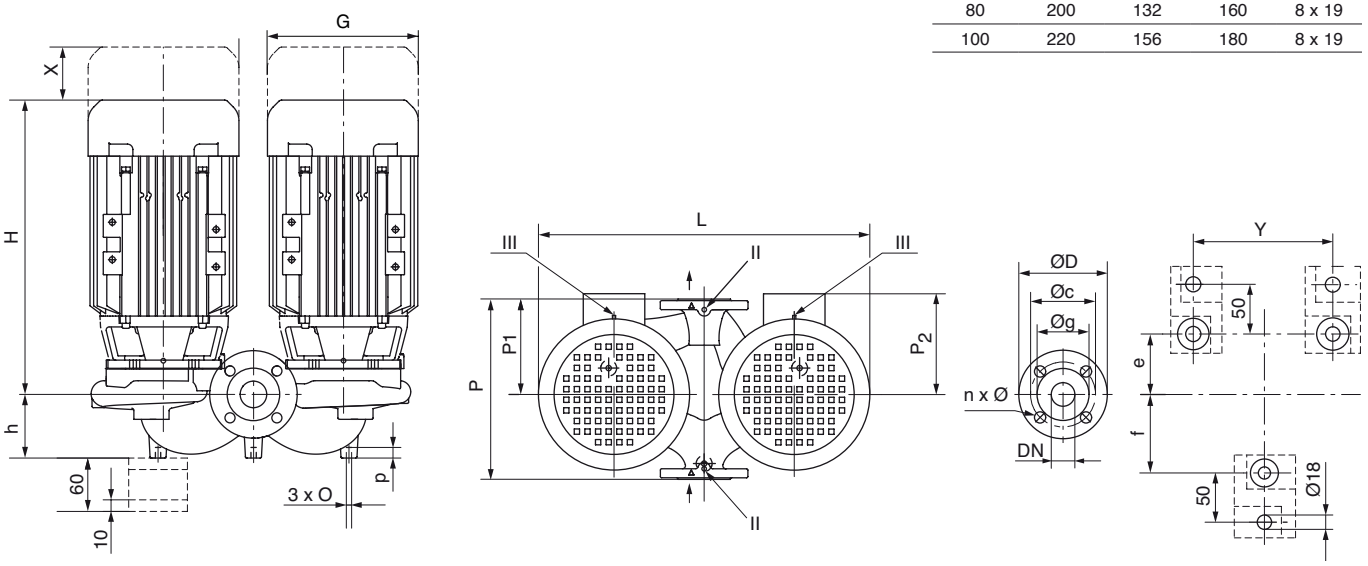

*Check the information plate on the motor when setting the thermal overload level.

ORDER REFERENCE	MOTOR					PUMP													
	P2	Intensity* tri 400	Efficiency	Cos ϕ	DN	h	L	Y	e	f	P	H	P1	O	p	P2	X	G	mass
	kW	A				mm	mm	mm	mm	mm	mm	mm	mm	mm	mm	mm	mm	mm	kg
JRN203-16/3	3	5.8	84.6	0.88	32	100	539	360	43	137	320	393	155	M10	20	160	150	217	95
JRN203-17/4	4	7.7	85.8	0.87	32	100	539	360	43	137	320	409	155	M10	20	168	150	232	105,4
JRN204-16/4	4	7.7	85.8	0.87	40	100	587	400	52	145	340	413	170	M10	20	168	150	232	109,6
JRN204-17/5,5	5,5	10.2	87.0	0.87	40	100	587	400	52	145	340	433	170	M10	20	168	150	279	132
JRN204-20/7,5	7,5	13.7	88.1	0.89	40	110	692	500	38	192	440	515	220	M10	20	188	150	279	169,1
JRN205-14/4	4	7.7	85.8	0.87	50	105	532	360	52	148	340	463	170	M10	20	168	150	232	107,3
JRN205-16/5,5	5,5	10.2	87.0	0.87	50	120	619	360	50	130	340	503	180	M10	20	188	150	279	143,8
JRN205-17/5,5	5,5	10.2	87.0	0.87	50	120	619	360	50	130	340	503	180	M10	20	188	150	279	144,2
JRN205-17/7,5	7,5	13.7	88.1	0.89	50	120	619	360	50	130	340	503	180	M10	20	188	150	279	148,2
JRN205-18/7,5	7,5	13.7	88.1	0.89	50	120	693	500	50	200	440	521	200	M10	20	188	150	279	165,9
JRN206-13/5,5	5,5	10.2	87.0	0.87	65	120	619	400	50	150	340	521	170	M12	20	188	150	279	145,3
JRN206-14/5,5	5,5	10.2	87.0	0.87	65	120	619	400	50	150	340	521	170	M12	20	188	150	279	145,8
JRN206-14/7,5	7,5	13.7	88.1	0.89	65	120	619	400	50	150	340	521	170	M12	20	188	150	279	162
JRN206-15/5,5	5,5	10.2	87.0	0.87	65	152	679	440	55	185	430	521	215	M12	20	188	150	279	164,8
JRN206-16/5,5	5,5	10.2	87.0	0.87	65	152	679	440	55	185	430	521	215	M12	20	188	150	279	165,4
JRN206-16/7,5	7,5	13.7	88.1	0.89	65	152	679	440	55	185	430	521	215	M12	20	188	150	279	177
JRN208-13/5,5	5,5	10.2	87.0	0.87	80	155	630	400	62	178	400	528	200	M12	20	188	150	279	159,8
JRN208-14/7,5	7,5	13.7	88.1	0.89	80	155	630	400	62	178	400	528	200	M12	20	188	150	279	176
JRN410-14,5/1,1	1,1	2.45	81.4	0.8	100	180	801	580	80	250	500	397	226	M12	20	147,5	150	177	132,6
JRN410-15/1,5	1,5	3.3	82.8	0.79	100	180	801	580	80	250	500	407	226	M12	20	147,5	150	177	137,6
JRN410-16/2,2	2,2	4.7	84.3	0.8	100	180	801	580	80	250	500	423	226	M12	20	154,5	150	196	149,4
JRN410-17/3	3	6.1	85.5	0.83	100	180	801	580	80	250	500	465	226	M12	20	154,5	150	196	164,2

LRN - JRN

LRN - JRN OPTIONS

Sealing cap: For double pump. Blocks the opening left by the removal of the hydraulics section and the motor.

Backflange: Round to be soldered nominal press. 10/16 (sold individually).

Set of legs: Used when fixing to a concrete support.

Models of pumps by family	Sealing cap Part reference	Backflange Part reference	Set of legs Part reference
203-17	2040971	82243	2040967
204-17	2040971	82244	2040967
204-22	2042861	82244	2040967
205-14	2040970	82245	2040967
205-17	2040971	82245	2040967
205-22	2042861	82245	2040967
206-14	2040970	82246	2040968
206-17	2040971	82246	2040968
208-14	2040970	82247	2040968
410-17	2040971	82248	2040968

Special mechanical seal for 20 to 50% antifreeze if temperature is above 40°C: contact us for further details
.

PARTICULARITIES

a) Electrical

P2 = 3 kW : three-phase 400 V **Y** 50 Hz
three-phase 230 V **Δ** 50 Hz

P2 ≥ 4 kW : three-phase 400 V **Δ** 50 Hz

b) Installation

Mounted directly onto horizontal or vertical pipework or on massif.
The system must provide protection of the pump against bad weather and frost (do not expose to direct sunlight or rain).

c) Packaging

Pumps delivered with backflange gaskets.

d) Maintenance

Repair: see the list of spare parts available on the plan and cross-section.

ACCESSORIES

Sealing cap
Round backflanges to solder on
Set of support legs
Pressure measurement kit
Slave switch of protection motor (LRN)
Control and protection box (JRN)
Shut-off valves
Anti-vibration sleeves
Non-return valves

MGP CONTROL BOX FOR JRN

- Controls motors and provides thermal protection.
- Safeguards operation by automatically starting the backup pump, if there is a fault on the pump in service.

For further information, see specific manual for MGP boxes.

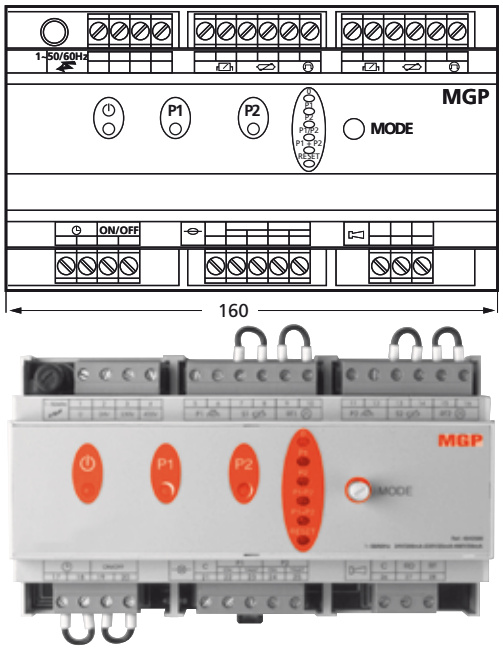

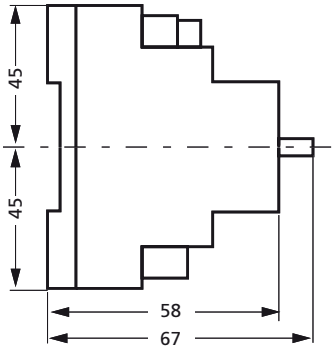

RANGE OF APPLICATION

Flows up to:	170 m³/h
Manometric head up to:	29 m
Maximum working pressure:	10 bar**
Temperature range:	– 20° to + 120°C
Nominal diameter of ports:	32 to 80
Reference MEI*:	≥ 0,10

*Minimum Efficiency Index
**16 bar an option

LRE - JRE

SINGLE AND DOUBLE IN-LINE PUMPS

Electronically driven
Heating - Air conditioning
50 Hz

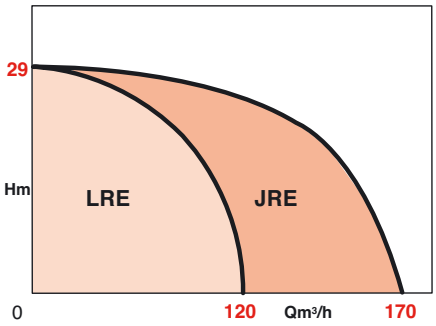

APPLICATIONS

To boost the circulation of hot or iced water, non-corrosive and without abrasive residues, with optimisation of the point of operation.
- Heating small and medium multiple housing complexes.
- Air conditioning.
- Many industrial and agricultural applications.
- Heating greenhouses etc.

ADVANTAGES

- **SAVES ENERGY**
- **Increased efficiency from the IE2 motor.**
- **Optimises the point of operation of the pumps.**
- **Saves up to 50% energy compared with traditional pumps.**

- **REDUCES NOISE**
- **Reduces hissing and hydraulic noise from thermostatic taps.**
- **Automatically adapts performance to the needs of the installation.**

- **SIMPLICITY**
- **A single button to select functions and adjust settings, directly on the pump.**
- **Parameters always visible on LCD screen**
- **A single model of converter for all applications (Δp-c, Δp-v, PID and n-constant).**
- **Pumps operate in backup or parallel mode.**

- **COMMUNICATION**
- **Local and remote display of running information and faults.**
- **«Instant» consultation of the state of the installation: electrical consumption, pressure and temperature.**
- **Record of electrical consumption, operating time, timetable pump start-ups…**



EVS

• JRE: double electronically-operated pump



• LRE: single electronically-operated pump

LRE - JRE

DESIGN

• Hydraulic part

- Sing or double flange pumps (PN10/16), monobloc, centrifugal, single-stage, with a built-in speed regulation system.

LRE : single model; JRE : double model.

- Inlet-outlet ports in line.

• Motor

- High efficiency IE2.
- Dry-running motor.
- The passage of the shaft is made water-tight by a self-lubricating mechanical seal.
- Motor protection built into the terminal box (PTC).

Speed:	750 to 2900 rpm.
Three-phase winding:	400 V ± 10%
Frequency:	50 Hz
Insulation class:	F (155°C)
Protection class:	IP55
CEM compliant:	EN 61800-3
CEI compliant:	60034

BASIC CONSTRUCTION

Main components	Material
Pump housing	EN GJL 250
Bearing lantern	EN GJL 250
Shaft	Steel X20-Cr13
Mechanical seal	Carbide Si/carbon/EP
Impeller	Polypropylene + Glass fibre

IDENTIFICATION

LRE ou JRE 2 03-16/1.1 3G

Pump code
Single/double electronic

2-pole motor

Nominal diam. of ports in cm

Nominal diam. of the impeller in cm

Power of motor in kW

3rd generation

OPERATING PRINCIPLE

Optimisation and noise reduction

A building's need for heating (or for air conditioning) varies between day and night, and also during the day as exterior temperature etc. changes, and even from one part of the building to another, as the thermostatic taps open and close. The consequences of these variations in differential pressure in the installation are noise and wasted energy due to maladjustment of the installation.

Electronically self-regulating pumps adjust the speed of rotation according to the loss of head of the system, in order to conserve optimum efficiency and maintain a lower level of noise.

The parameters of the pumps are adjusted automatically as the thermostatic taps open and close.

Types of adjustment

The differential pressure of the pump can be adjusted in two different ways:

- Constant pressure (Δp-c) : with this method of adjustment, the electronics maintain the differential pressure of the pump constant whatever the flow, based on the predefined pressure setting.
- Variable pressure (Δp-v) : with this method of adjustment, the electronics reduce the differential pressure (manometric head) if the flow reduces, set on the predefined differential pressure setting.
- Manual adjustment: the speed of rotation of the pump is maintained at a constant level between n min and n max.
- PID adjustment: adjustment to a constant level by controlling the PID servo loop.

The LRE/JRE range can be used in "heating" and "air conditioning" modes.

These two modes are distinguished by a difference in tolerance when handling error messages.

- **"Heating" mode:** errors are tolerated. This means that depending on the type of error, the pump only indicates a fault if the same error is repeated several times in a specified length of time.
- **"Air conditioning"mode:** for all applications where each error must be recognised quickly. Each error is reported immediately (<2 seconds). In double pump operation, the backup pump returns to the previous point of operation within three seconds of the error appearing.

Double pump mode

Both pumps are controlled by the master pump.

Normal/backup operation

One pump maintains the required flow. The other pump can step in to correct a fault or when switched over. There is always only one pump in operation.

Operation in cascade

When operating with part load, only one pump operates. The second pump is turned on to optimise efficiency, which means when the sum of the powers absorbed by two pumps operating at part load is less than the power absorbed by one pump. The two pumps are then controlled synchronously up to the maximum speed of rotation. Switchover between them takes place every 24 hours of actual running.

External control

- The speed or the setting point can be adjusted externally by a signal: 0-10v or 2-10v or 0-20ma or 4-20ma
- External On/off
- Error and status messages

DESCRIPTION

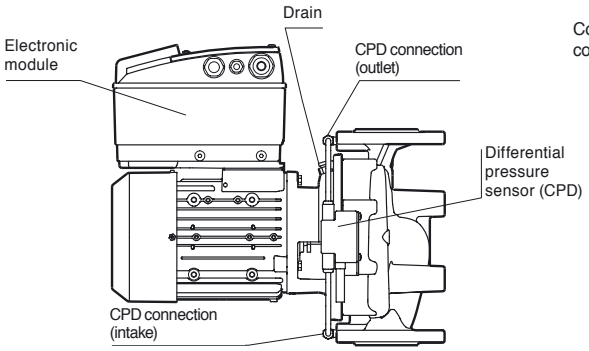



OPERATING CURVES

• Constant ΔP operation

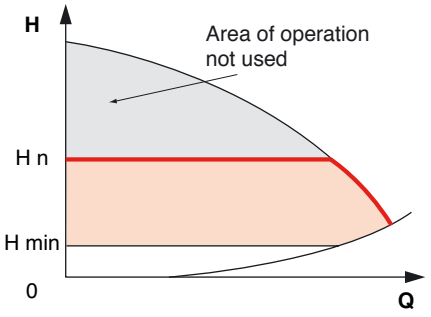

The electronics maintain differential pressure, according to the flow demanded, at the value of set point Hn, up to the maximum characteristic curve.

• Variable ΔP operation

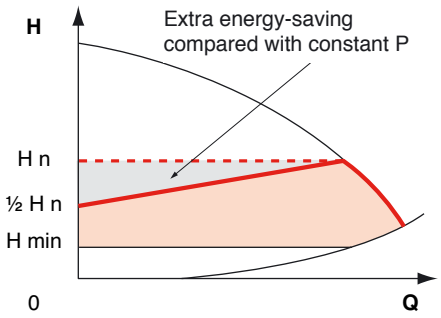

The electronics alters the set value of the differential pressure in a straight line between Hn and ½Hn. The set value of the differential pressure rises or falls with the flow demanded.

• DDC operation (example 0-10V)

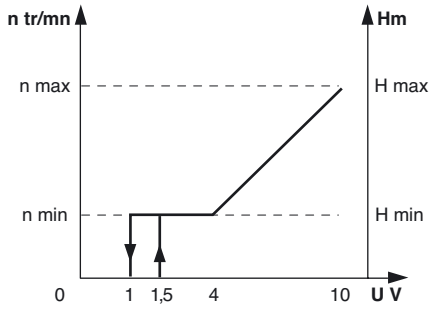

- Speed or set point controlled externally by a signal: 0-10V or 2-10V or 0-20mA or 4-20mA
- External On/off
- Error and status messages

• Operation in synchronised cascade

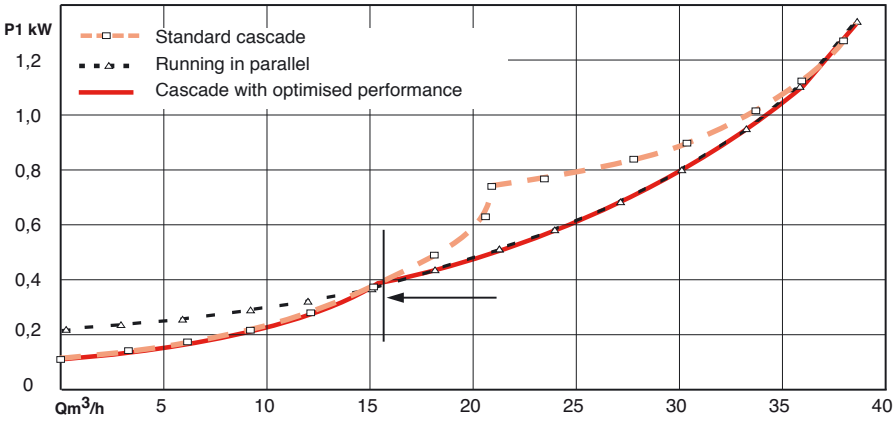

Operation of a JRE pump in cascade.
At equivalent flow, the pump automatically uses the curve of least power.

CONNECTIONS

Charge for the dry contacts for error and status messages: min. 12V DC/10mA,
max. 250V AC/1A

- **L1,L2,L3,PE:** Connected to the mains 3~400V/50Hz.
- **SSM:** Dry contact inverter for general error signal.
- **SBM:** Dry contact inverter for ON signal.
- **AUX:** Switches the pump over externally (only for double pumps). Via an external contact, the pump will be switched over (dry contact without potential, switchover at each pulse).
- **Ext Off:** Dry contact for remote “on/off” controls.
- **MP:** Interface to connect a slave pump, to control a double pump.
- **1:** IN1 connexion for the differential pressure sensor 0-10V / 2-10V / 0-20mA / 4-20mA (input) corresponds to 40 to 100% of the nominal rotation speed.
- **2:** GND earth.
- **3:** +24V (output).

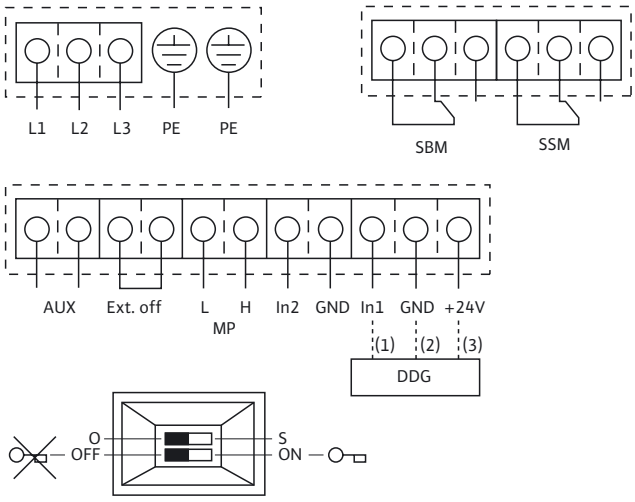

LRE - JRE

TABLE OF LRE / JRE FUNCTIONS

Function	Single and double LRE / JRE pumps
Modes of operation	
Δp-c for constant differential pressure	•
Δp-v for variable differential pressure	•
Adjustment mode (n = constant)	•
Manual controls	
Single button and screen	•
Manual functions	
Adjusting the differential pressure setting	•
Adjusting the speed of rotation (Adjustment mode)	•
Adjusting the mode of operation	•
Switching pump on/off	•
Configuring all the operating parameters	•
Clearing faults	•
External control functions	
Entering commands “priority Off”	•
Entering commands “Switching pumps over externally” (only active in double pump mode)	•
Entering commands “Analogue In 0 ...20 ma” (adjusting speed remotely)	•
Entering commands “Analogue In 0 ...10 V” (adjusting speed remotely)	•
Analogue input 0-10 V for the real value signal of the pressure sensor	•
Analogue input 2-10 V, 0-20 ma for real value signal of the pressure sensor	•
Signalling and display	
Centralised error message (dry contact-breaker)	•
Centralised status message	•
Exchange of data	
Infrared interface for wireless exchange of data with the Salmson Pump USB key plugged into a laptop	•
Place for Salmson SI modules (Modbus, BACnet, CAN, PLR, LON) for connexion to the centralised management system	•
Safety functions	
Built-in motor protection with integral electronic trip	•
Access lock	•
Running double pumps (double pump or 2 single pumps)	
Main/backup operation (automatic switchover in the event of fault)	•
Main/backup operation (switchover of pumps every 24 hours)	•
Parallel running	•
Parallel running (with optimised efficiency according to need)	•

• = provided

LRE -JRE - GENERAL PRESELECTION DIAGRAMS

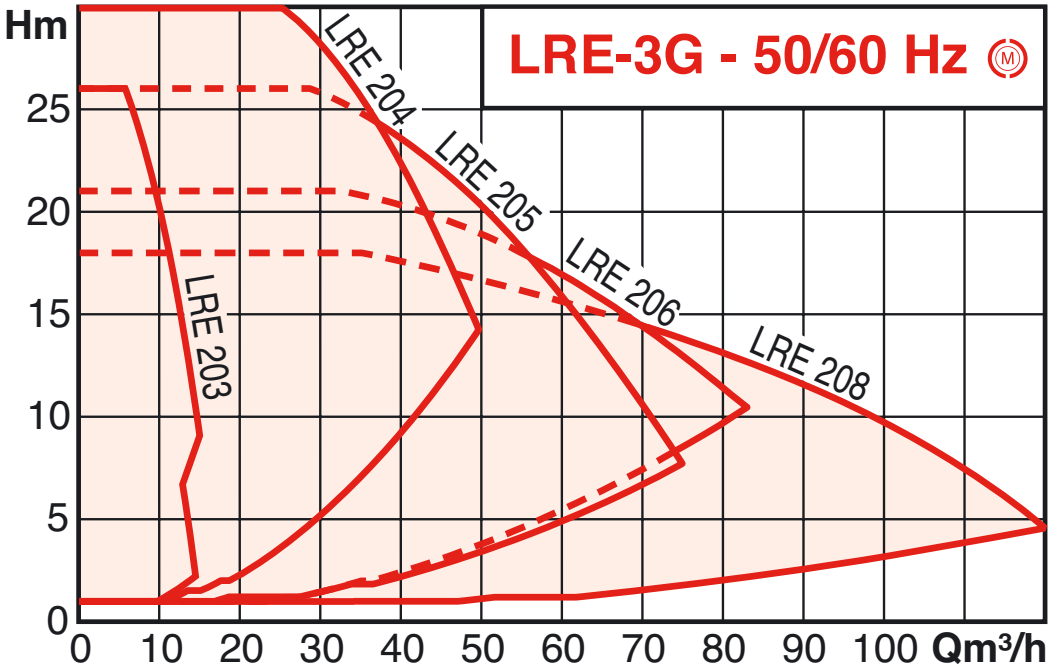

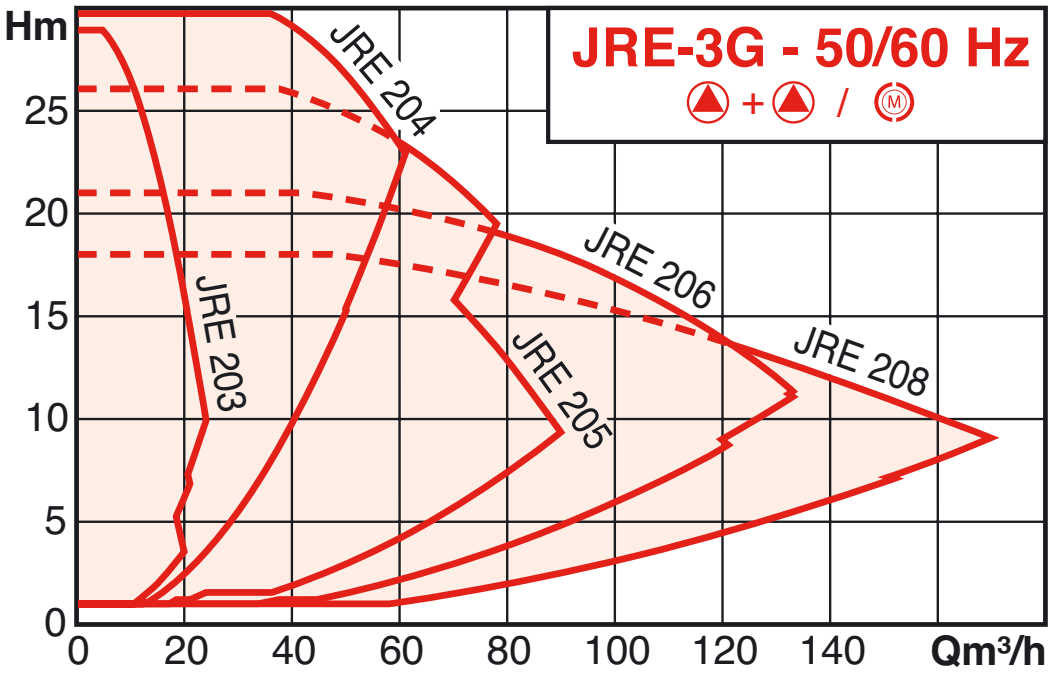

LRE - JRE

HYDRAULIC FEATURES - LRE

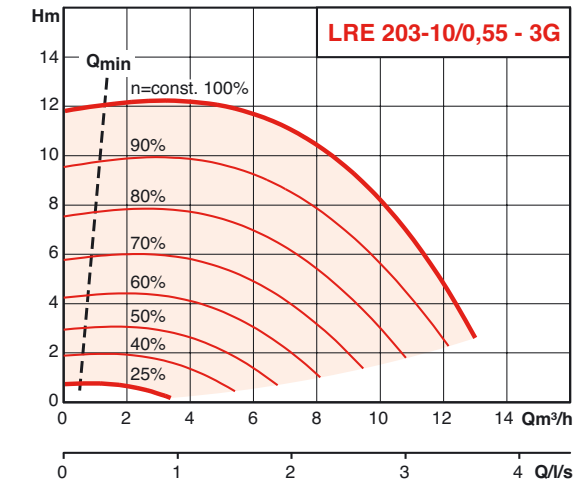

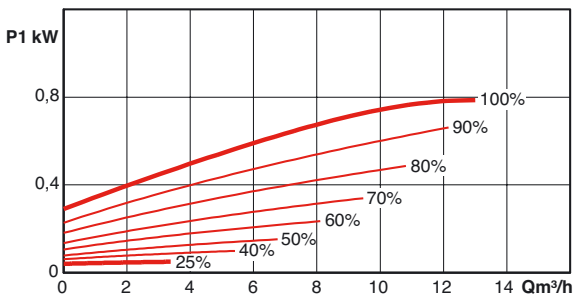

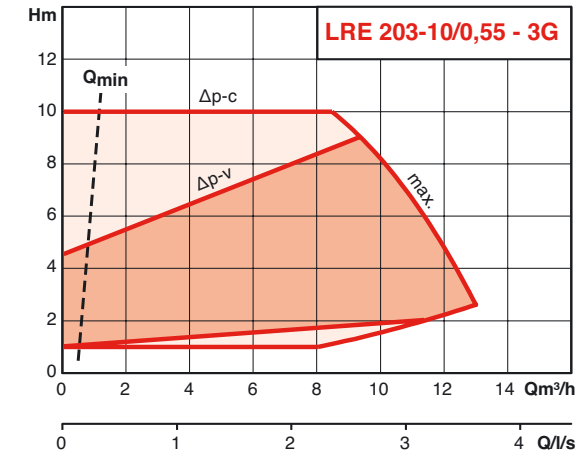

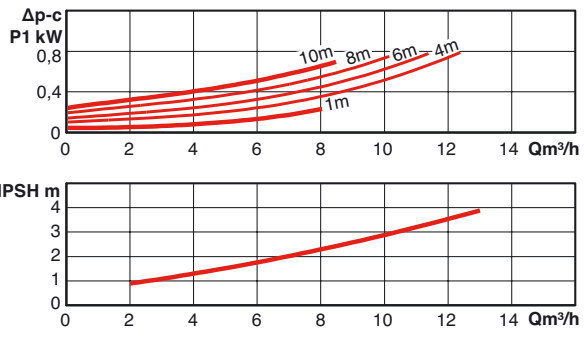

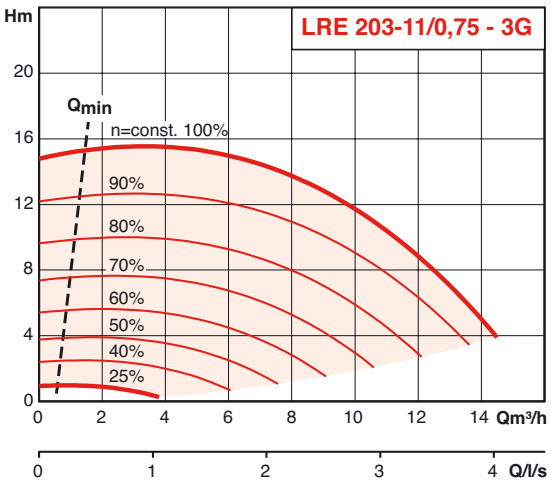

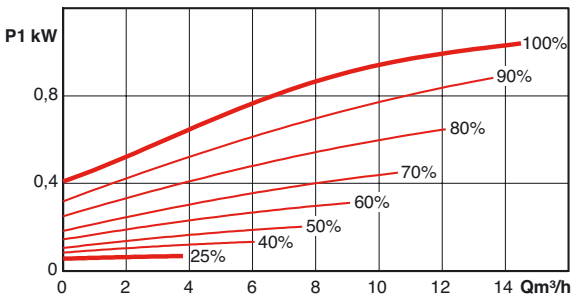

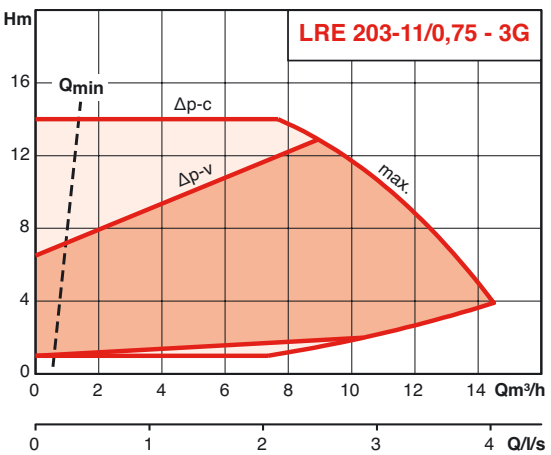

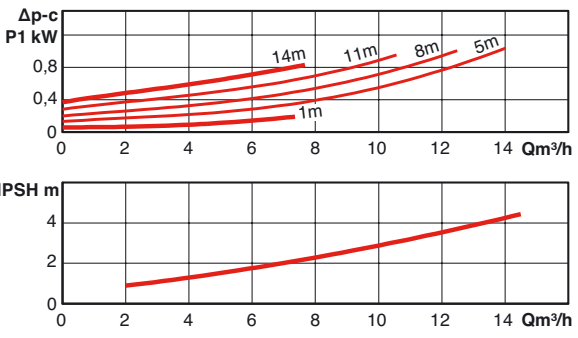

HYDRAULIC FEATURES - LRE

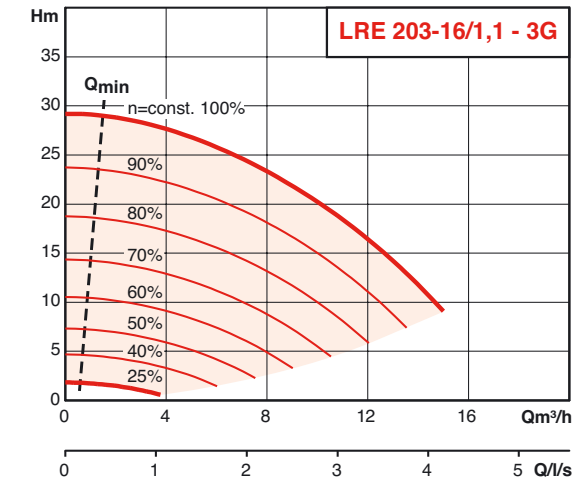

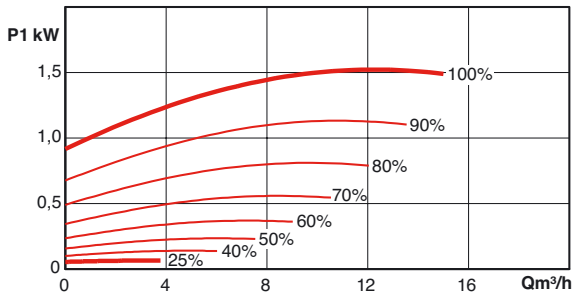

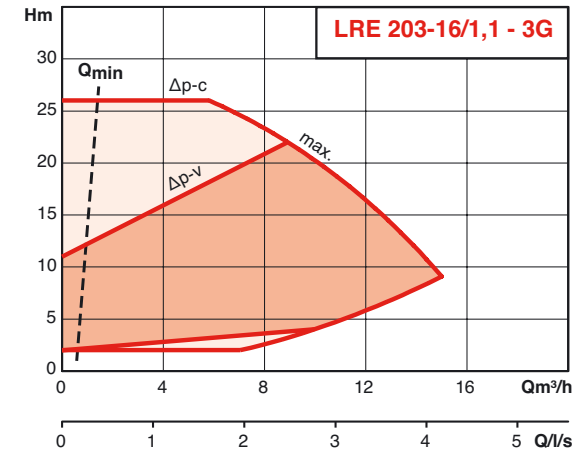

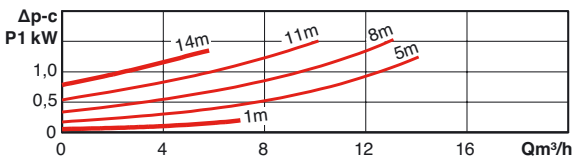

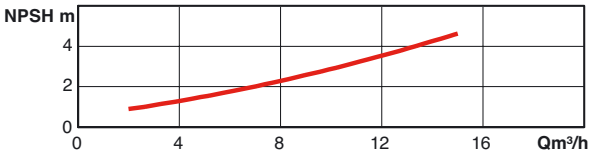

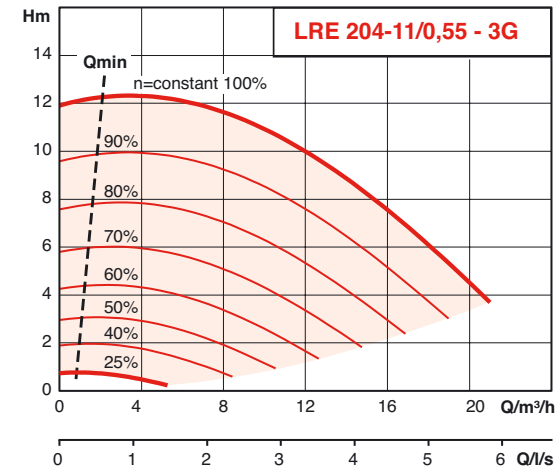

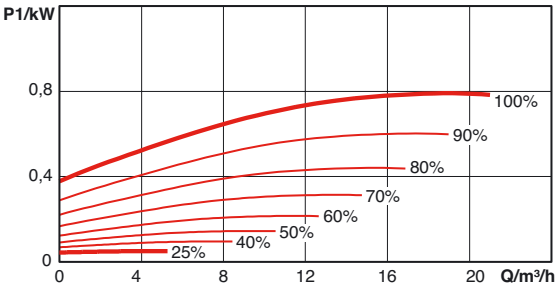

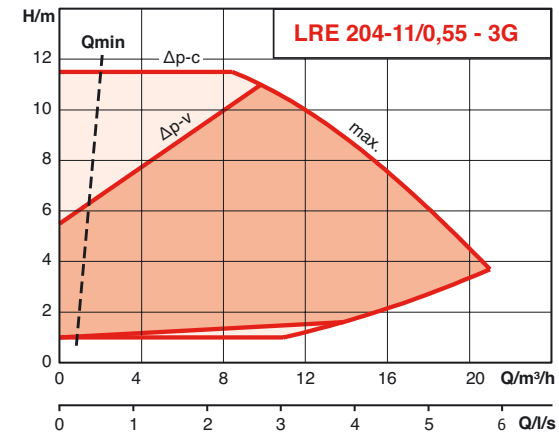

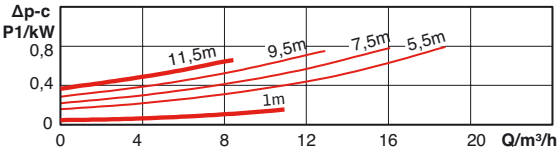

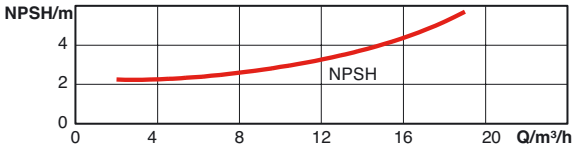

LRE - JRE

HYDRAULIC FEATURES - LRE

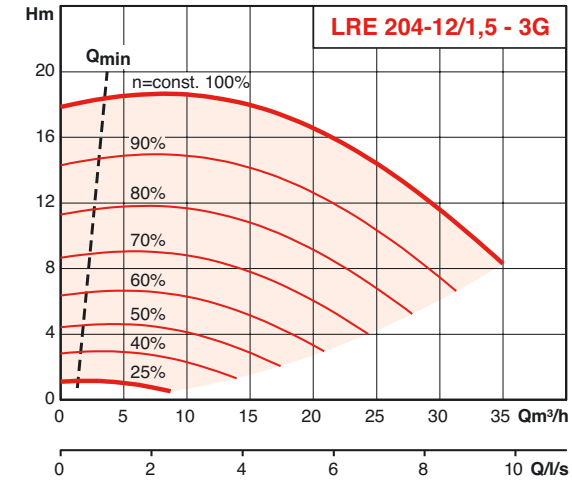

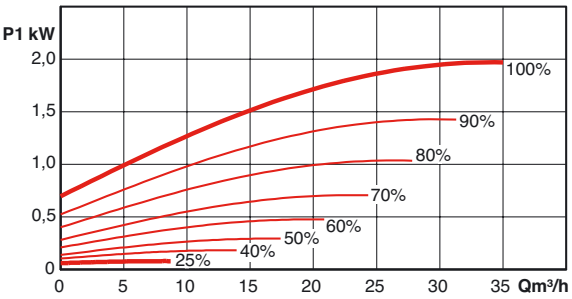

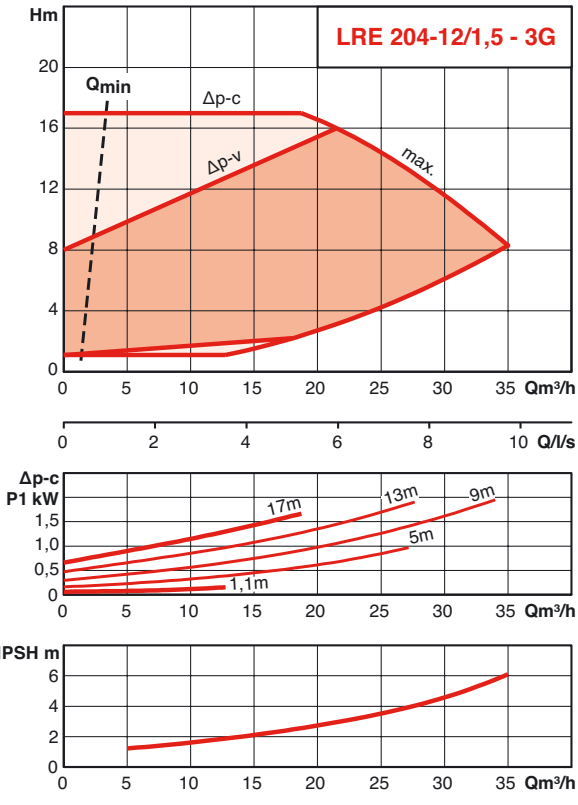

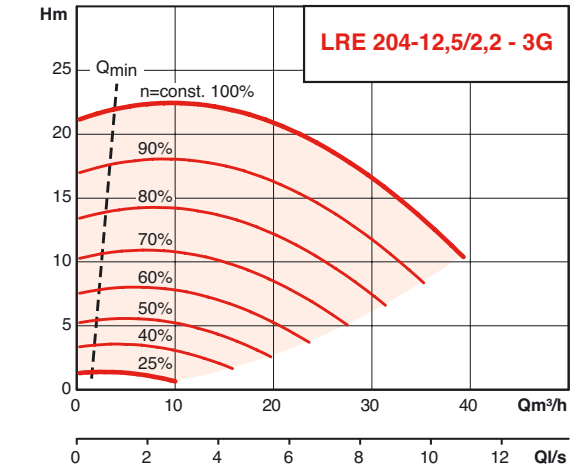

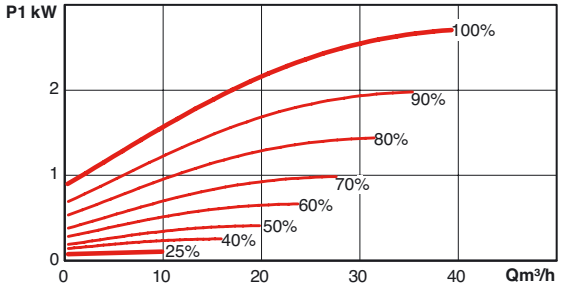

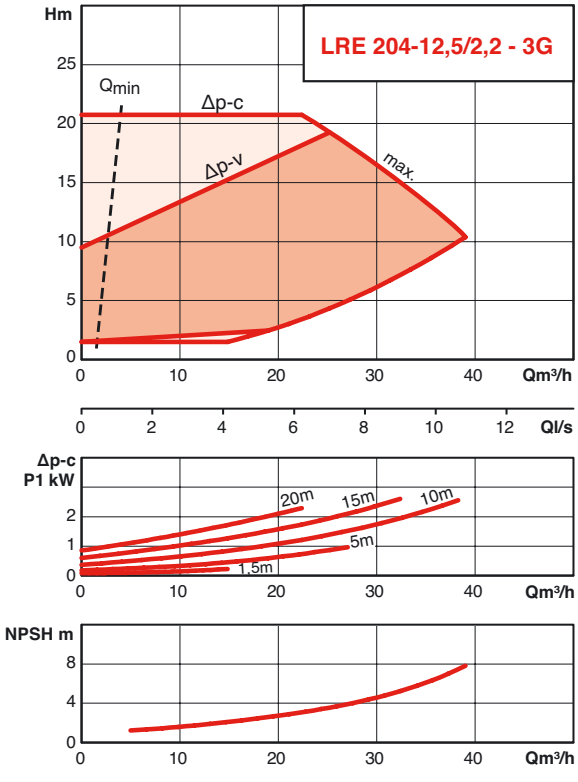

HYDRAULIC FEATURES - LRE

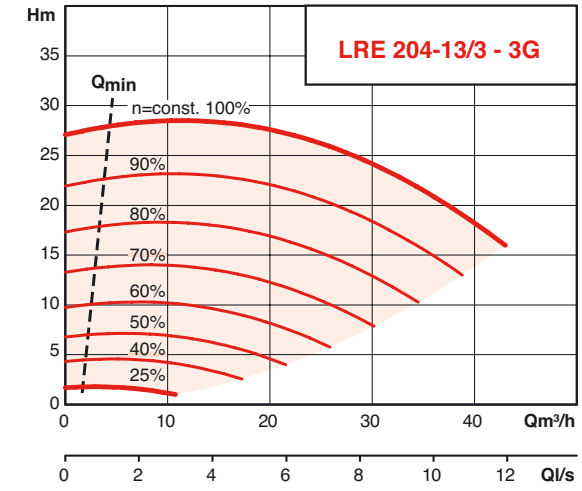

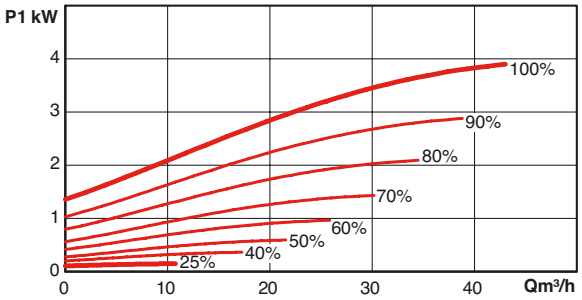

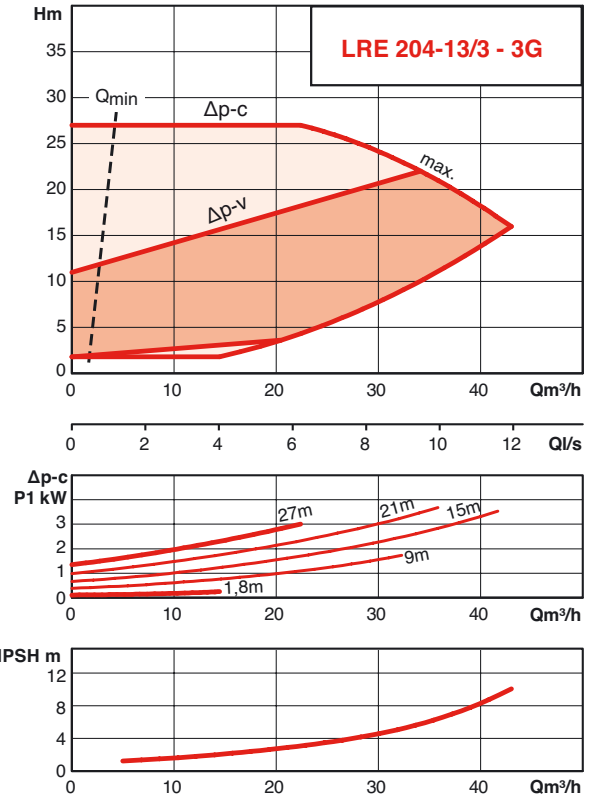

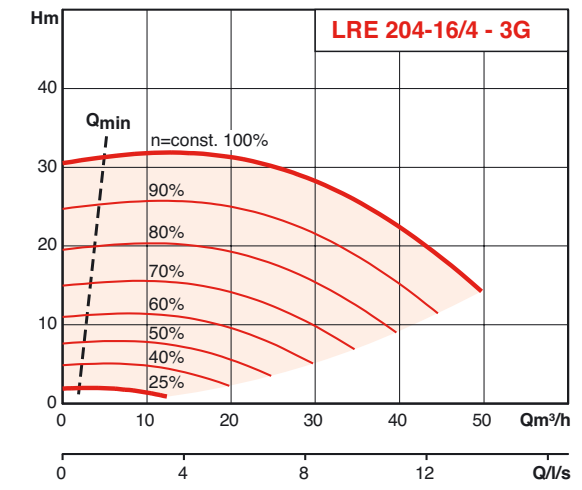

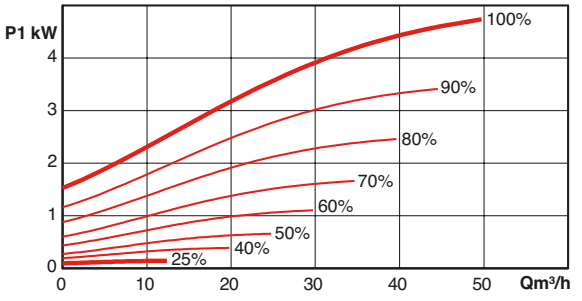

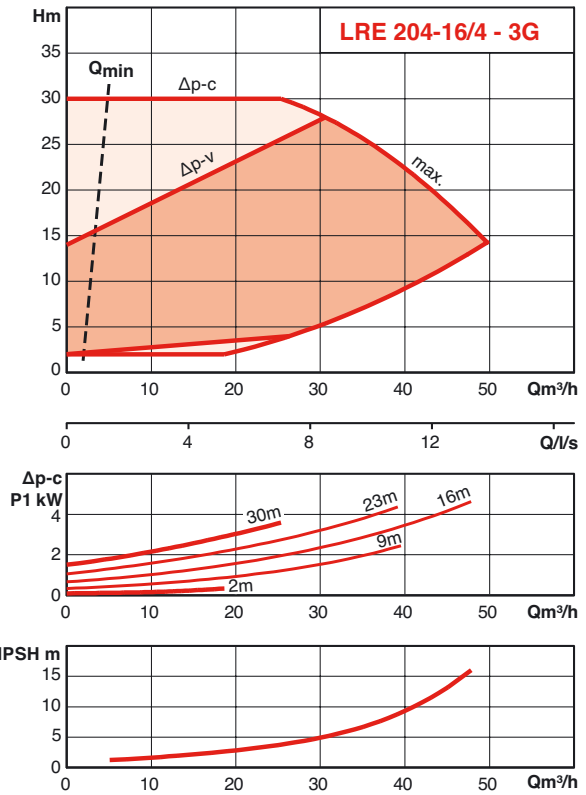

LRE - JRE

HYDRAULIC FEATURES - LRE

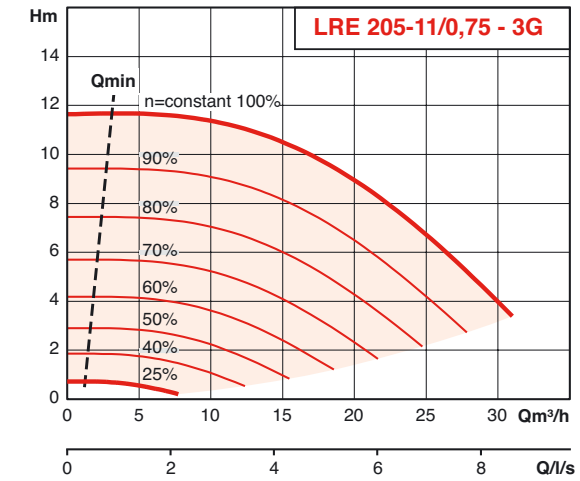

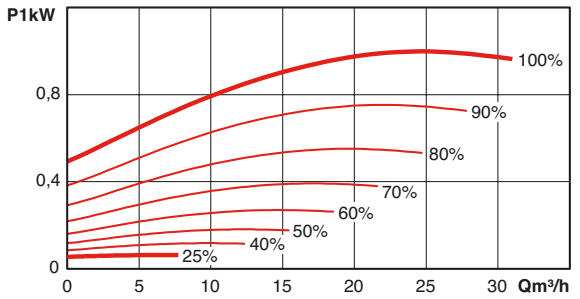

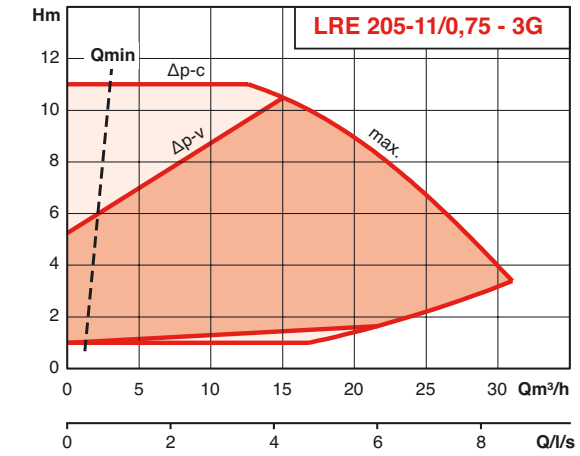

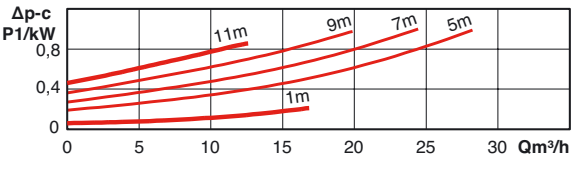

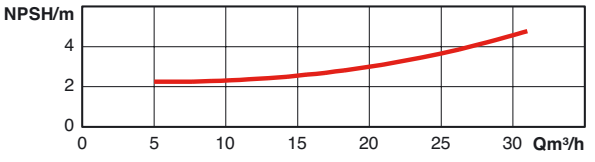

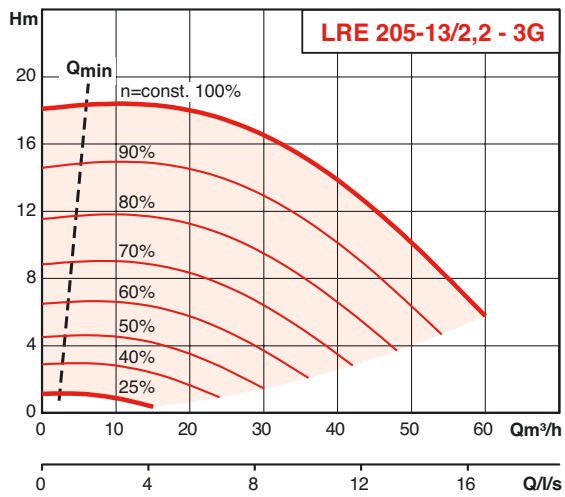

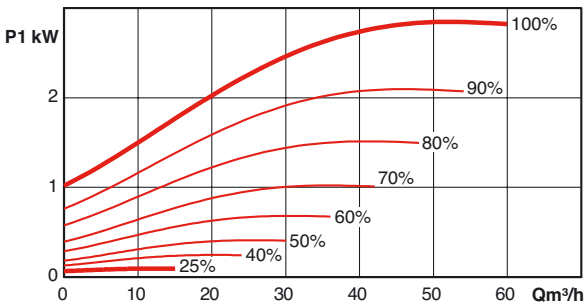

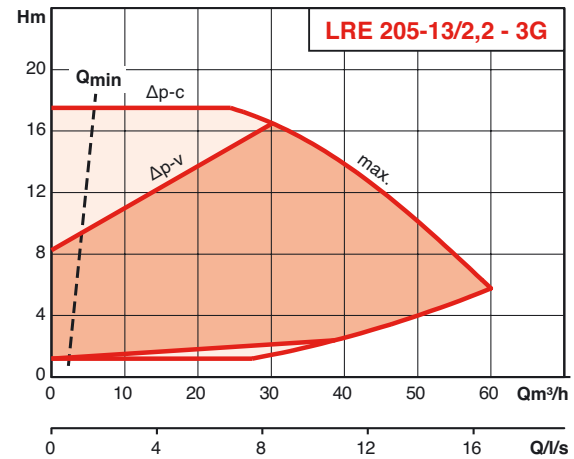

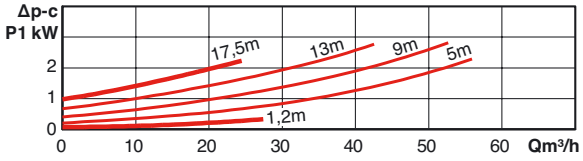

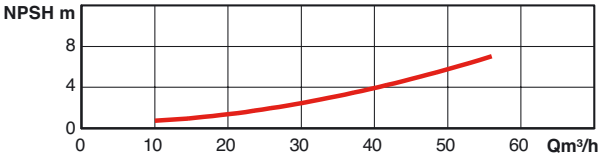

HYDRAULIC FEATURES - LRE

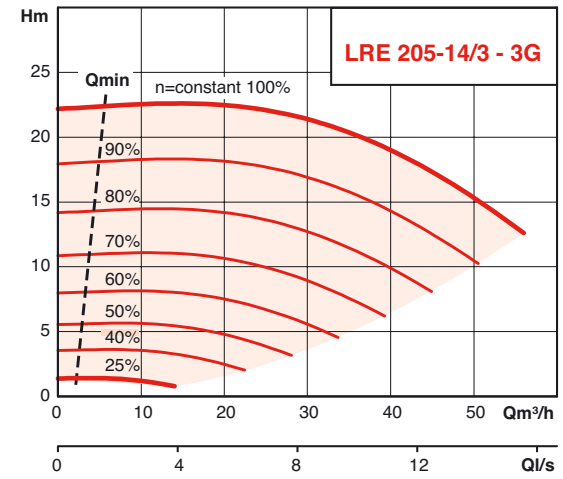

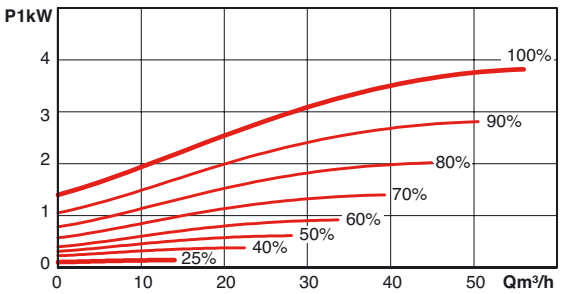

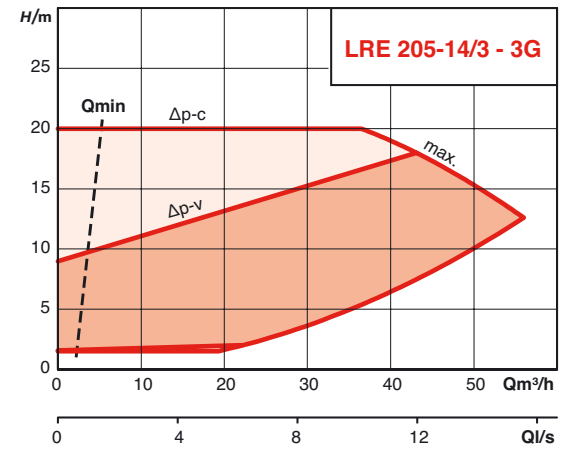

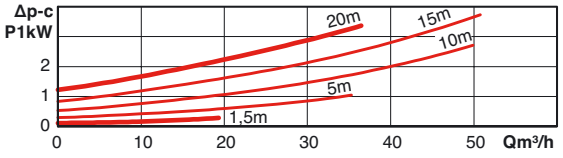

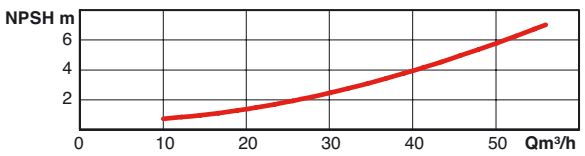

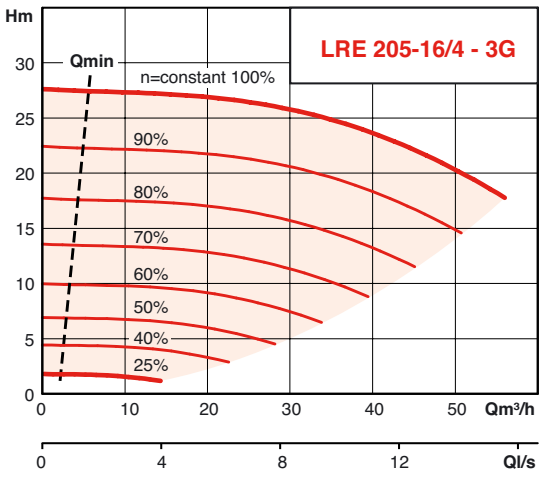

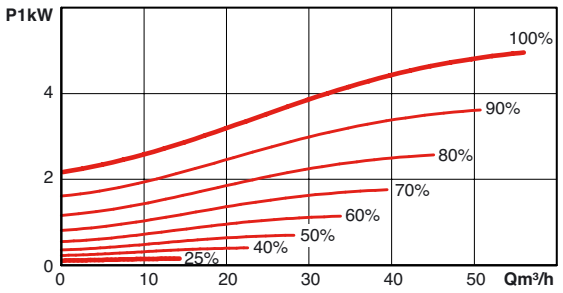

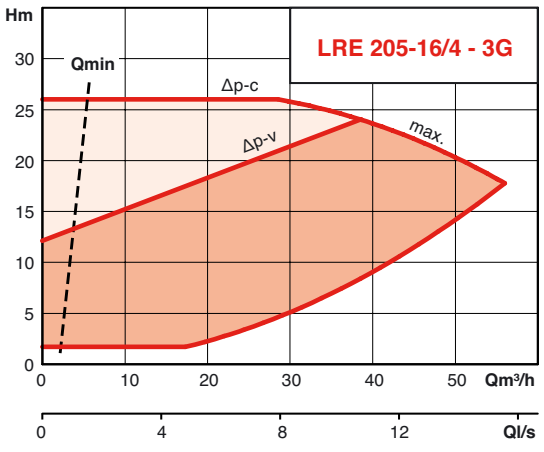

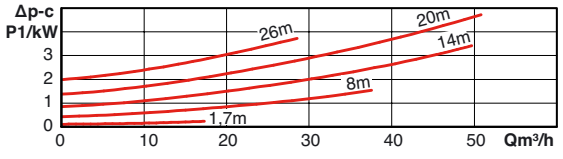

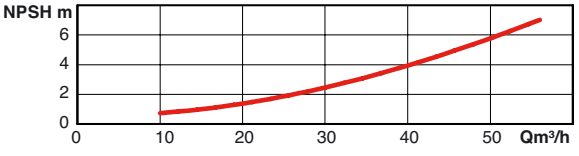

LRE - JRE

HYDRAULIC FEATURES - LRE

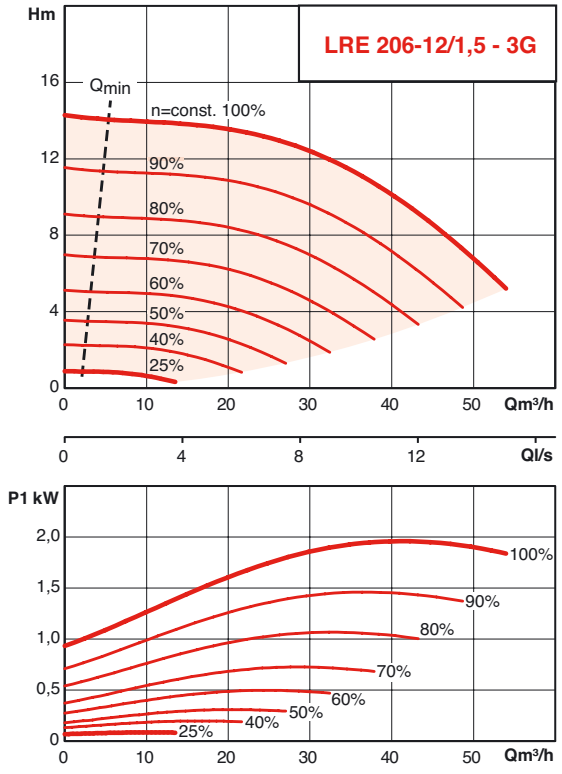

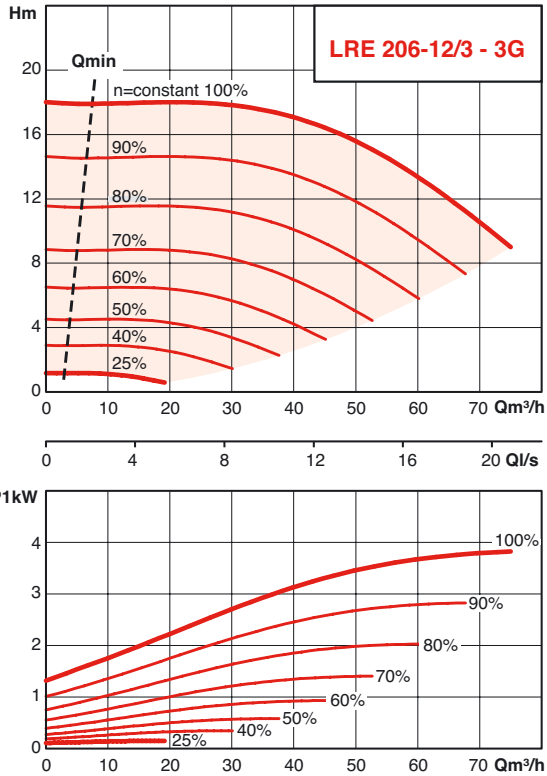

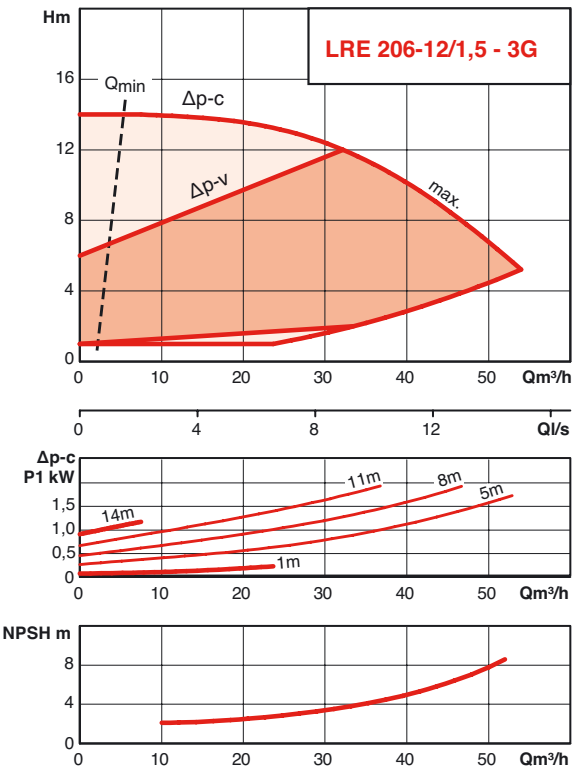

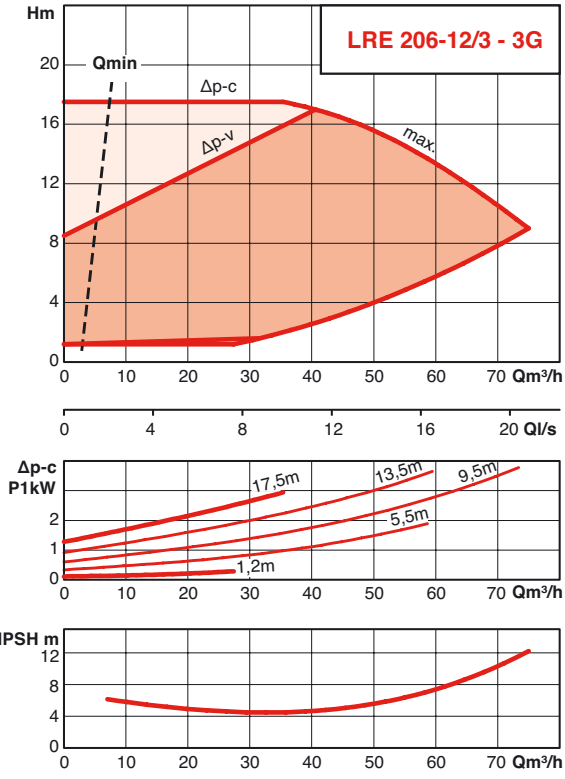

HYDRAULIC FEATURES - LRE

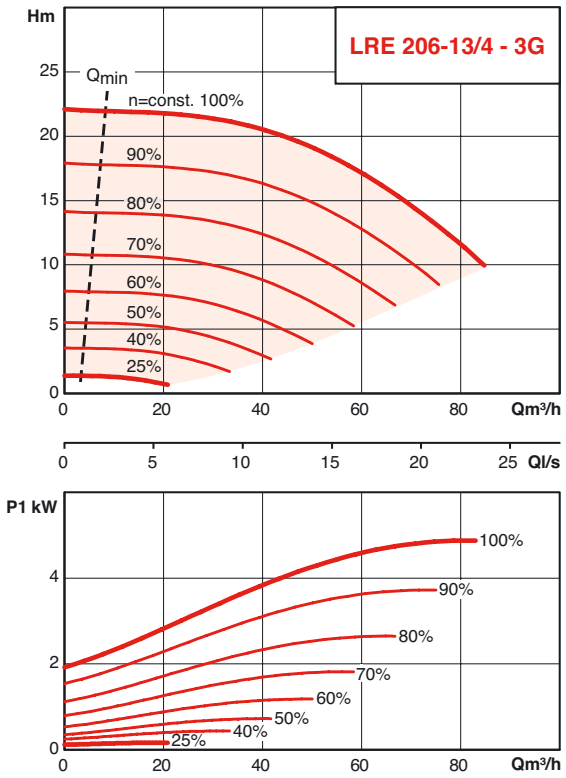

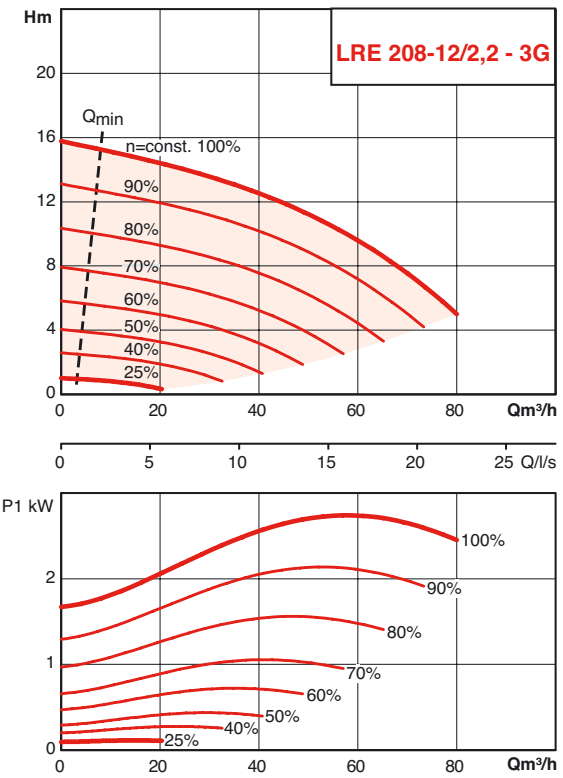

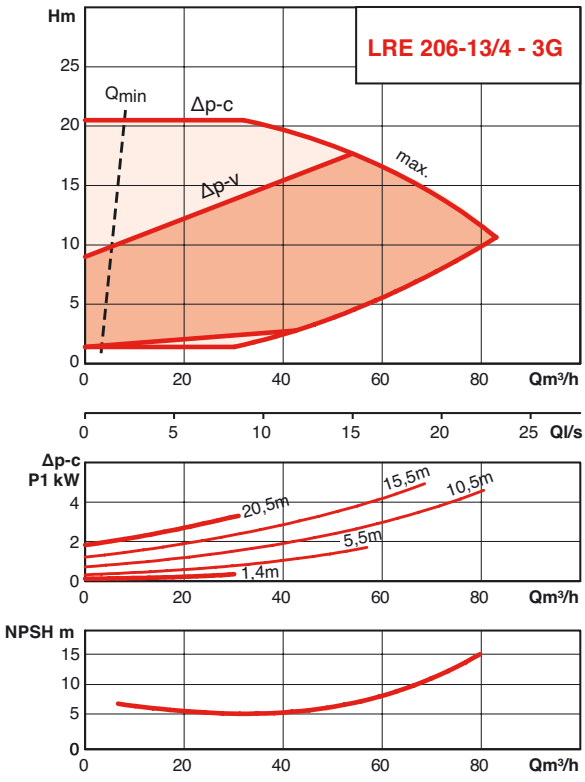

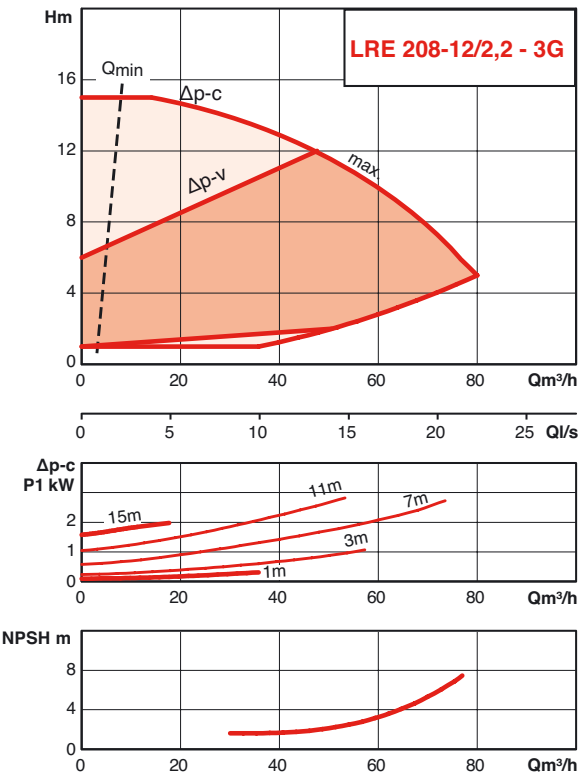

LRE - JRE

HYDRAULIC FEATURES - LRE

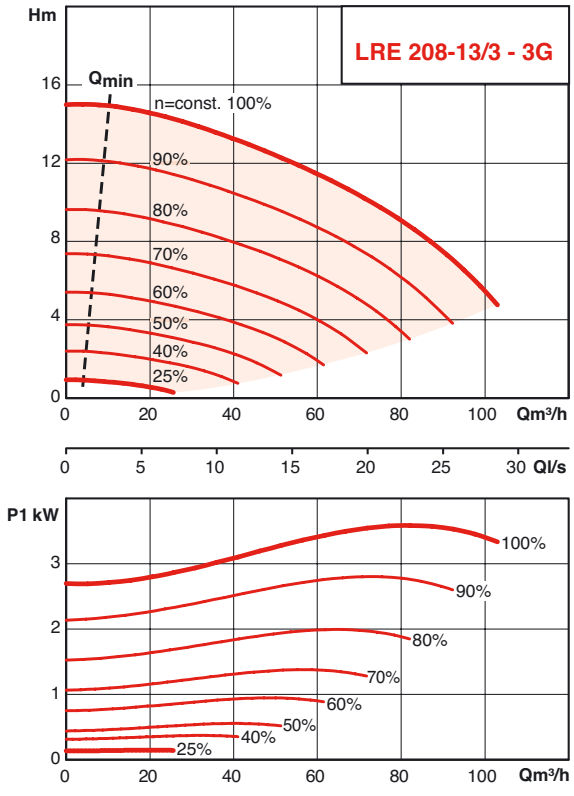

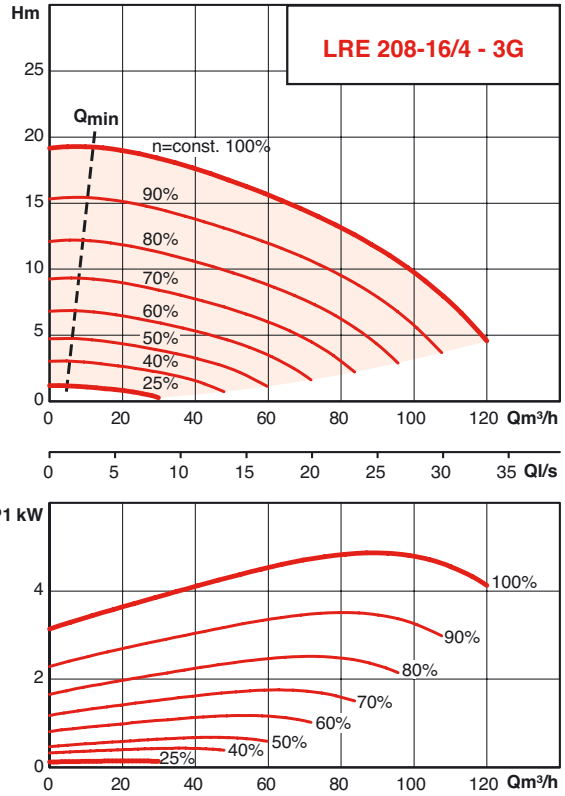

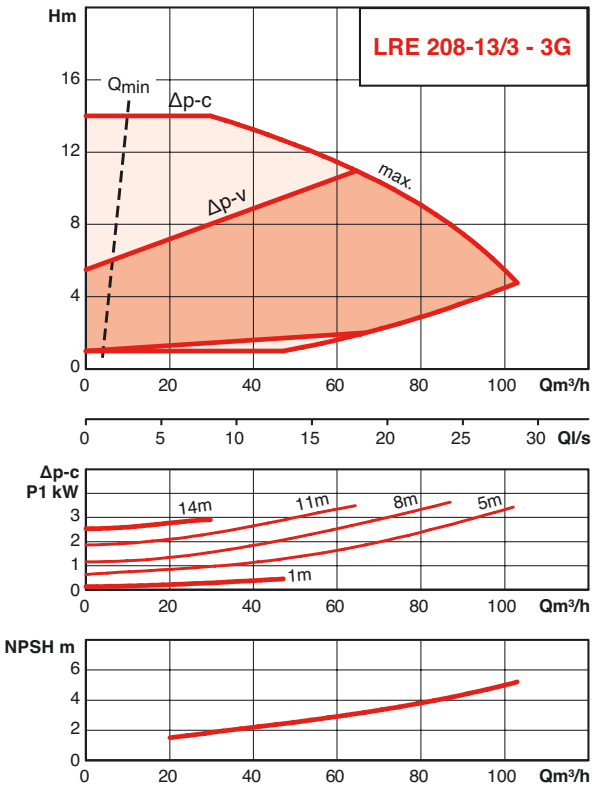

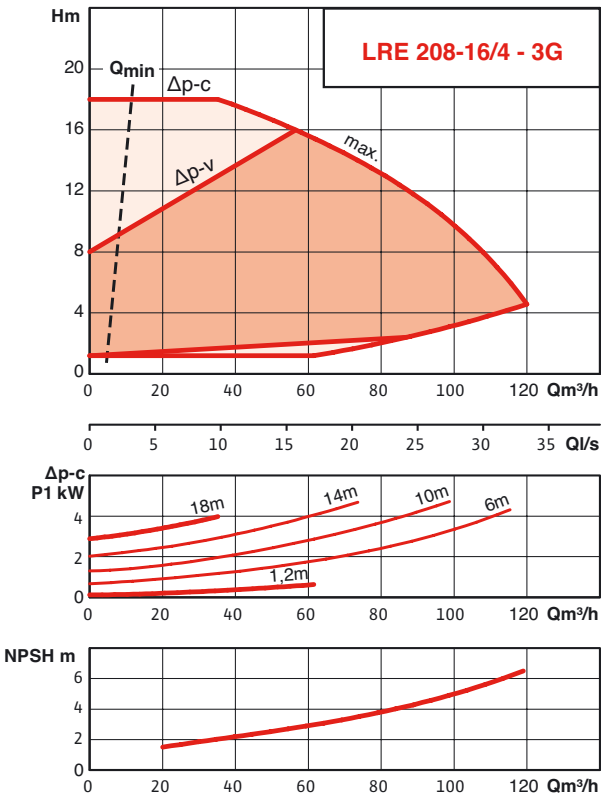

HYDRAULIC FEATURES - JRE

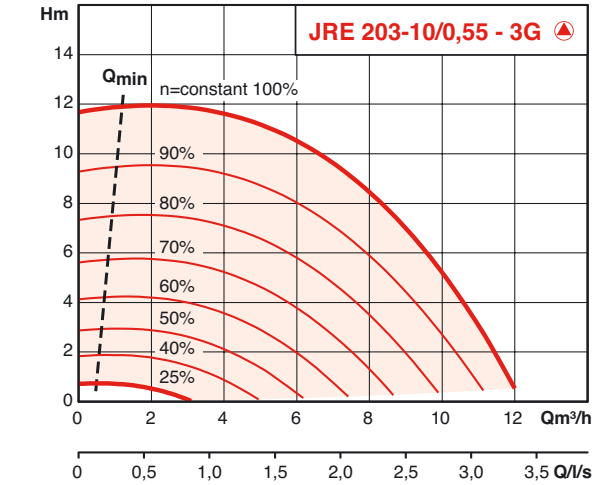

Operation
1 pump

Operation
2 pumps in parallel

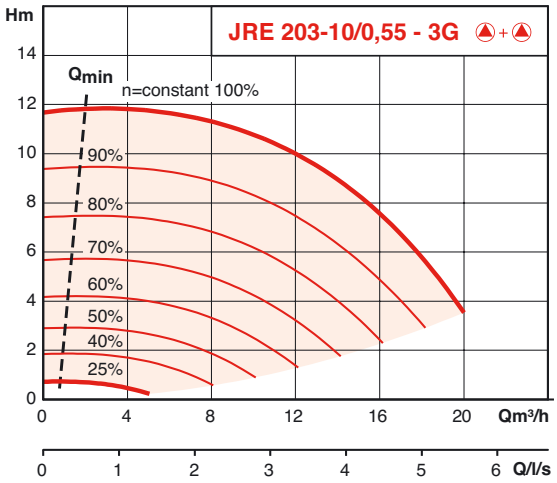

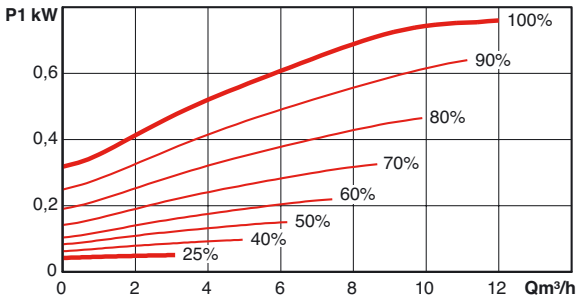

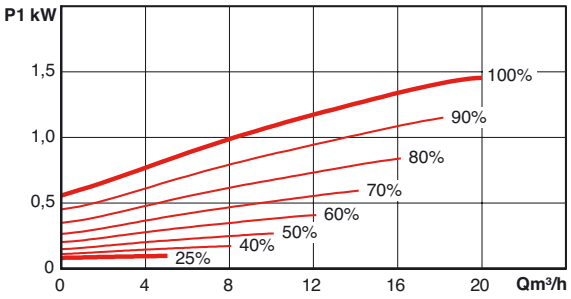

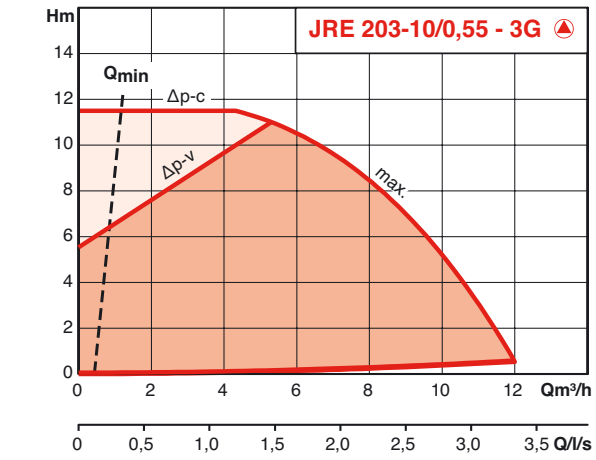

Operation
1 pump

Operation
2 pumps in parallel

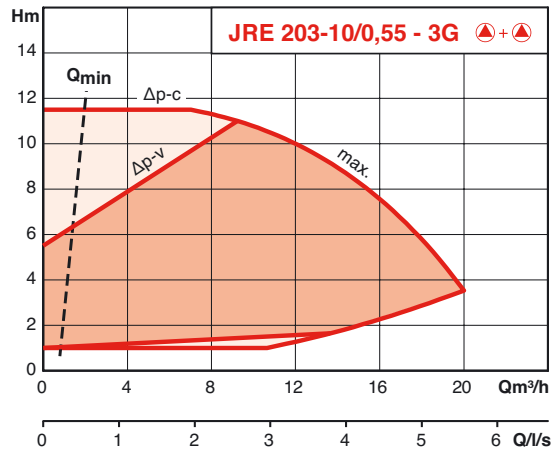

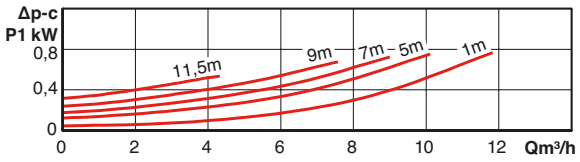

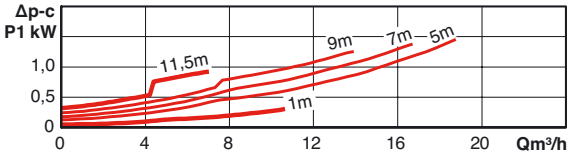

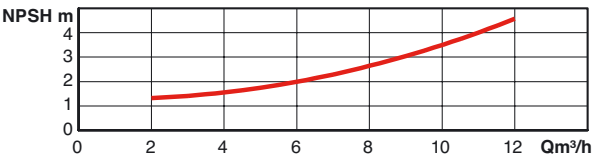

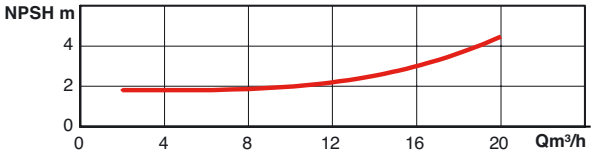

LRE - JRE

HYDRAULIC FEATURES - JRE

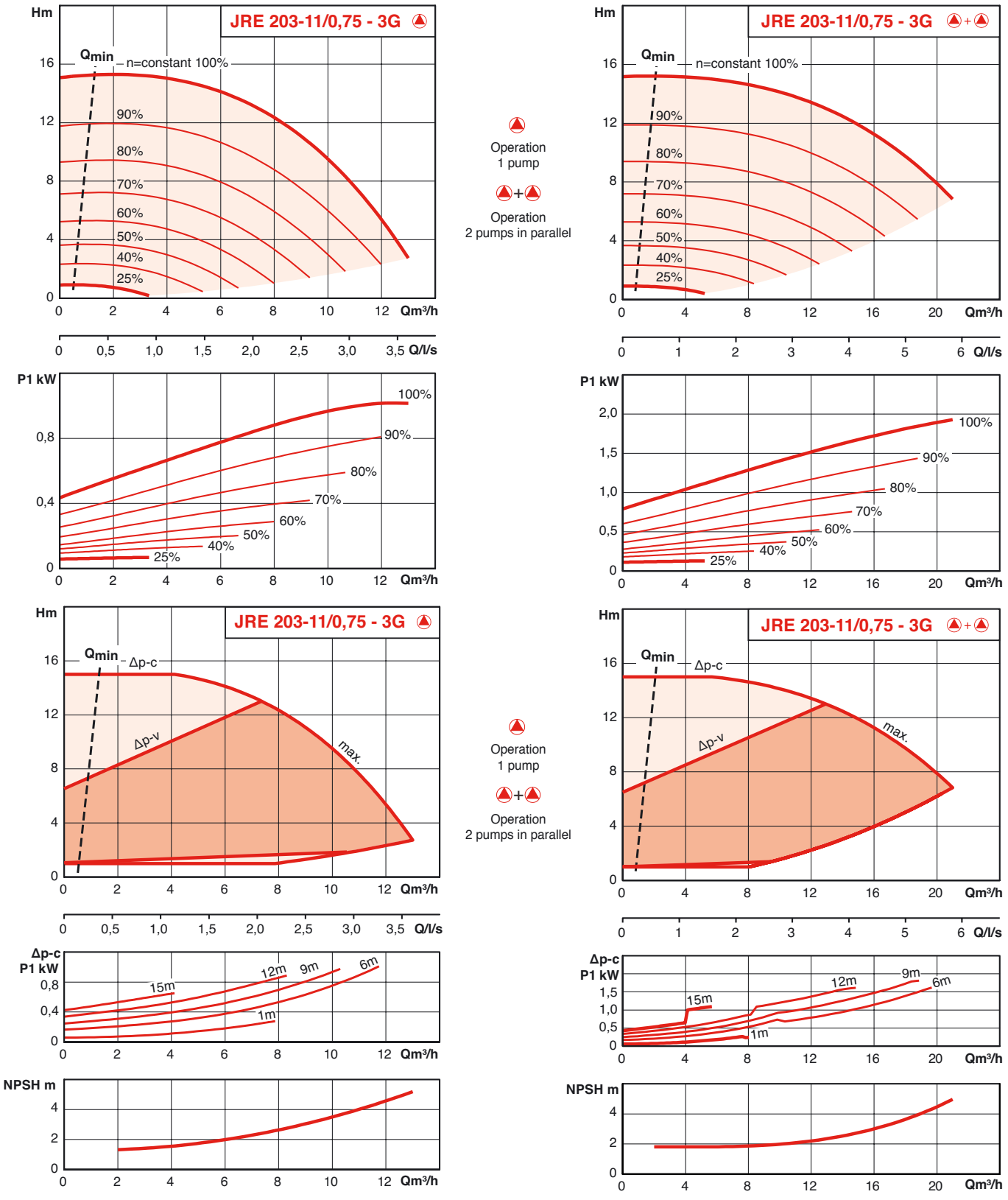

HYDRAULIC FEATURES - JRE

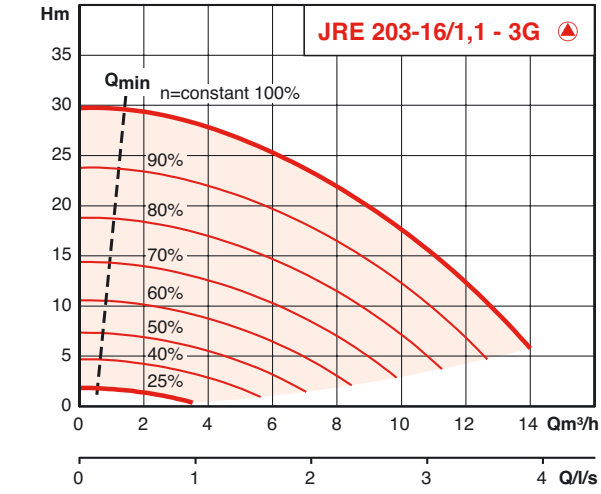

Operation 1 pump

Operation 2 pumps in parallel

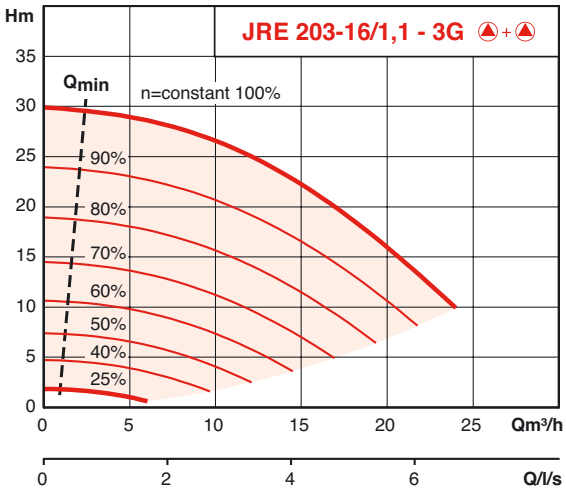

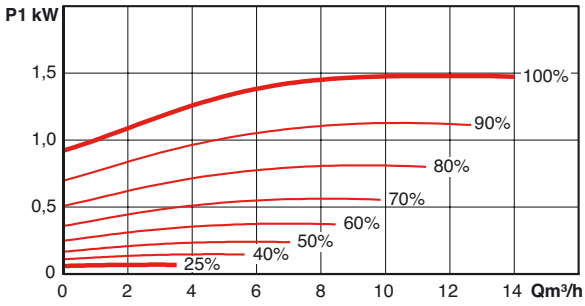

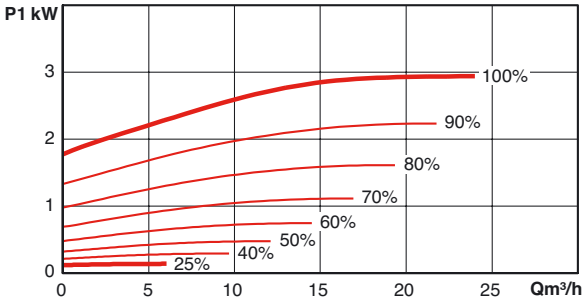

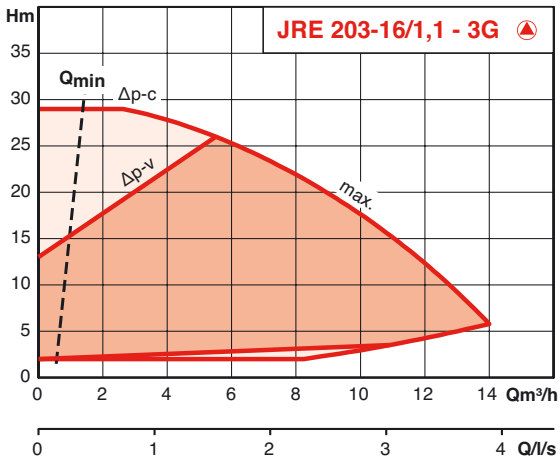

Operation 1 pump

Operation 2 pumps in parallel

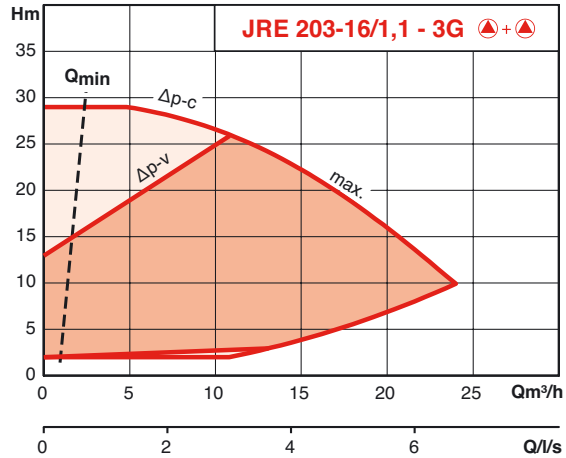

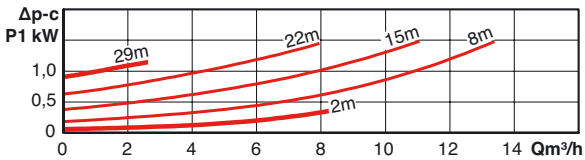

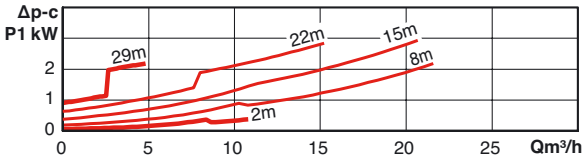

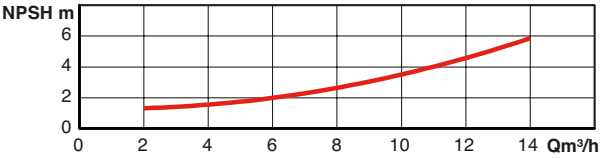

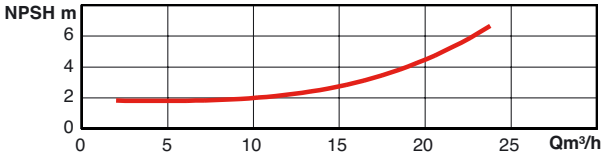

LRE - JRE

HYDRAULIC FEATURES - JRE

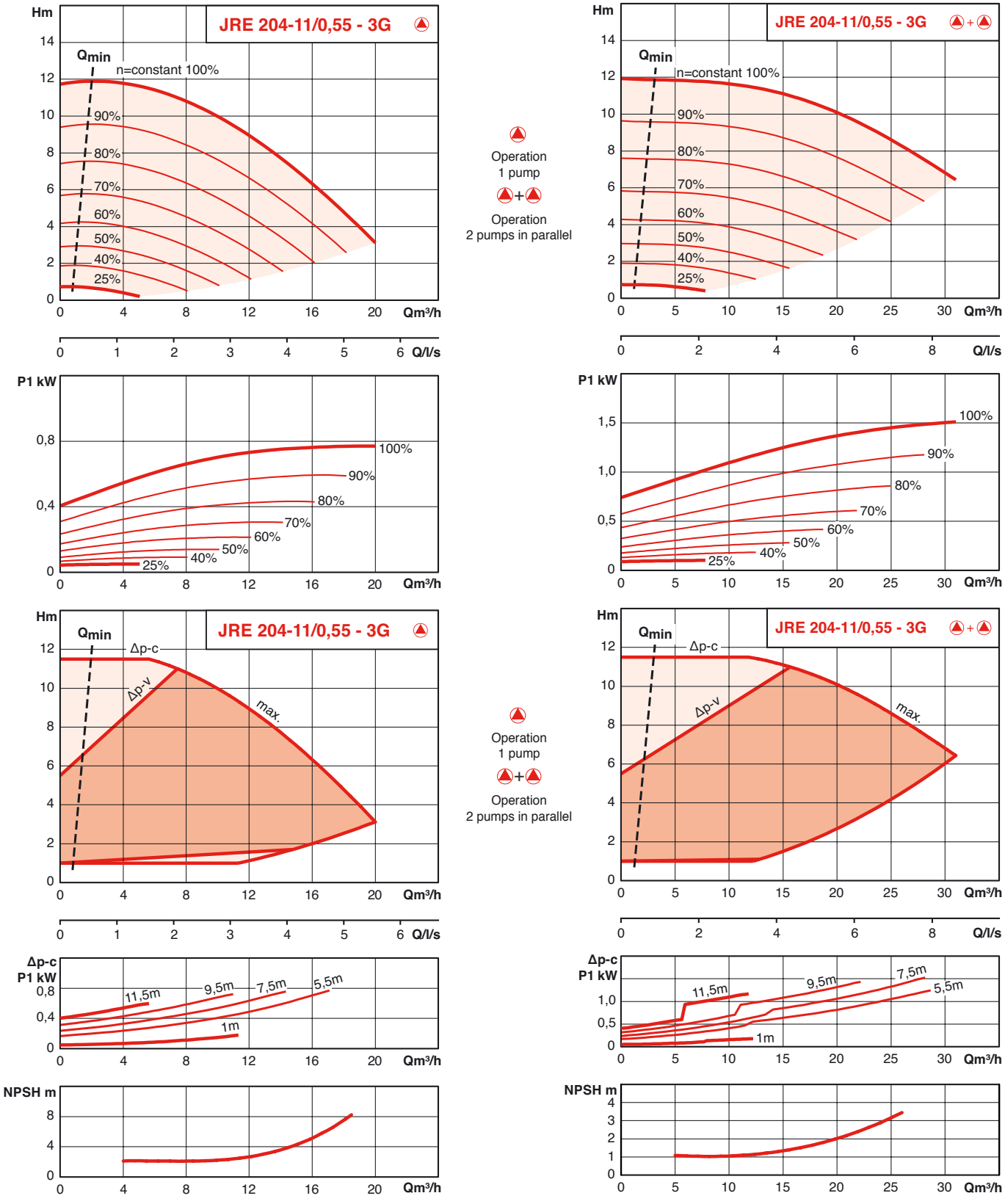

HYDRAULIC FEATURES - JRE

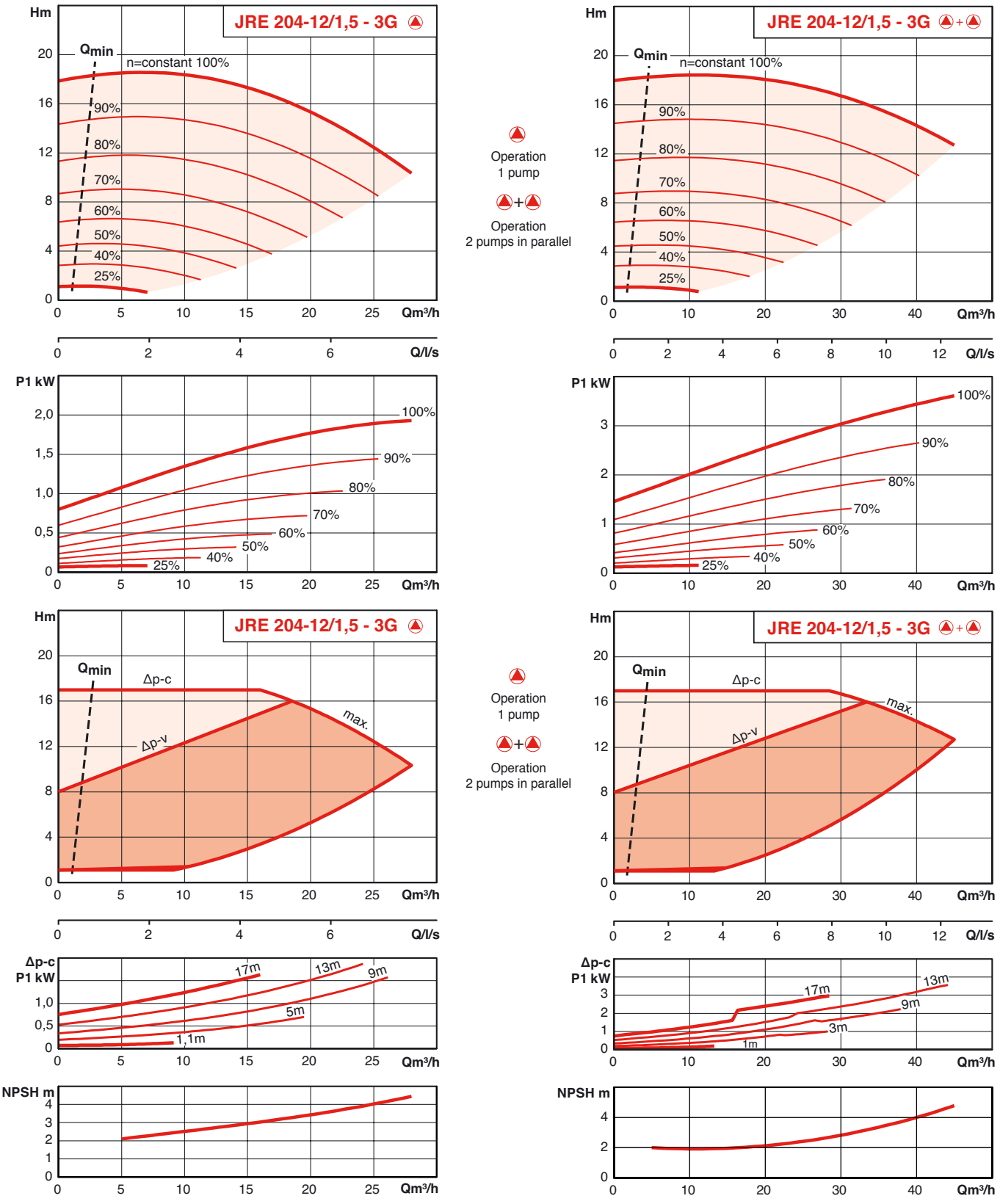

HYDRAULIC FEATURES - JRE

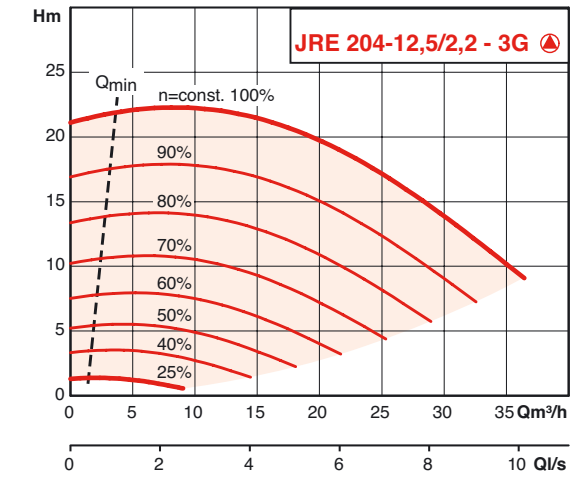

Operation 1 pump

Operation 2 pumps in parallel

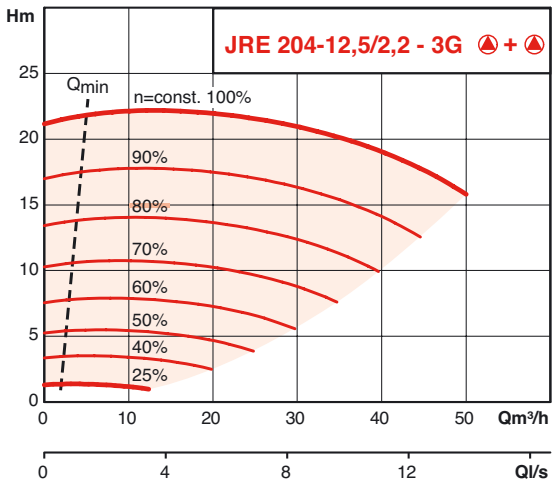

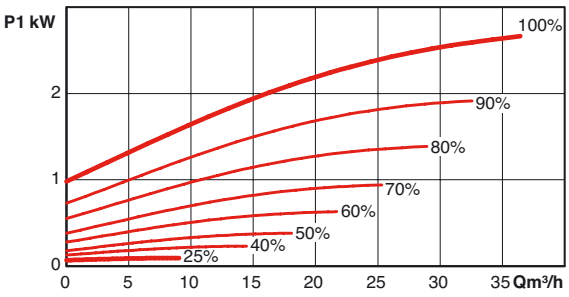

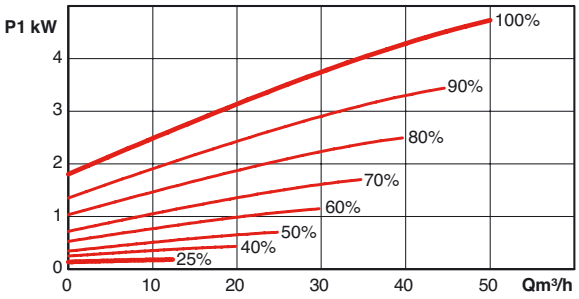

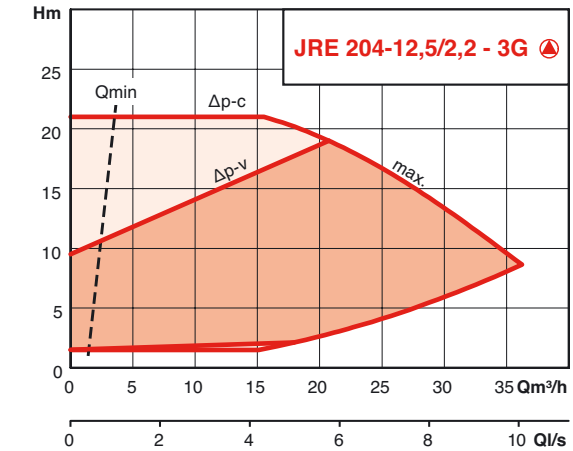

Operation 1 pump

Operation 2 pumps in parallel

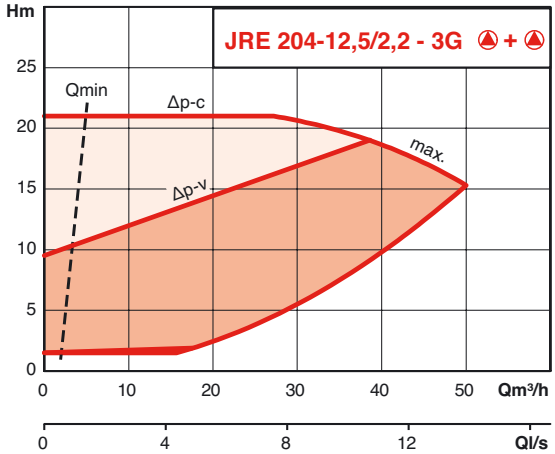

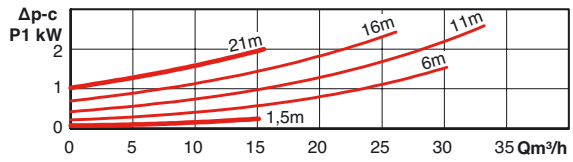

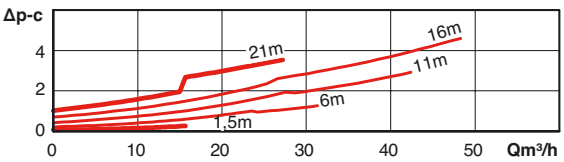

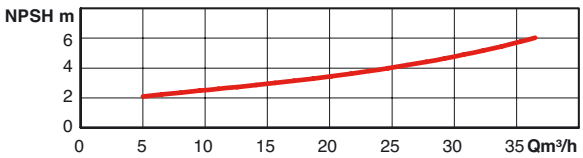

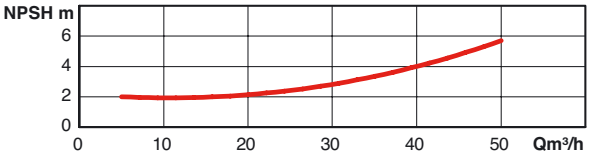

HYDRAULIC FEATURES - JRE

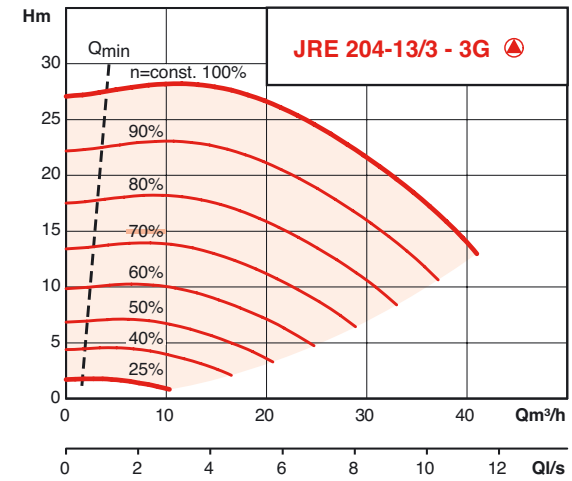

Operation 1 pump

Operation 2 pumps in parallel

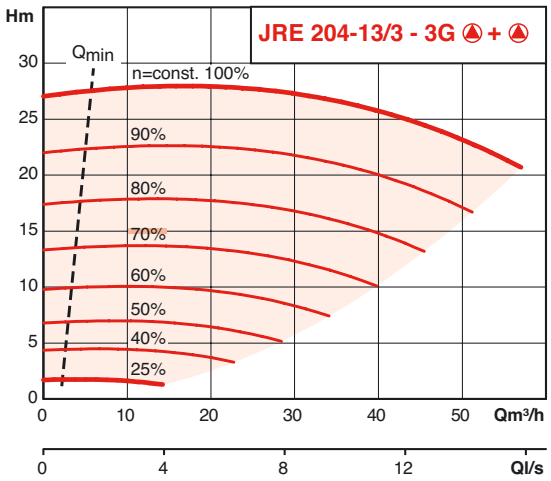

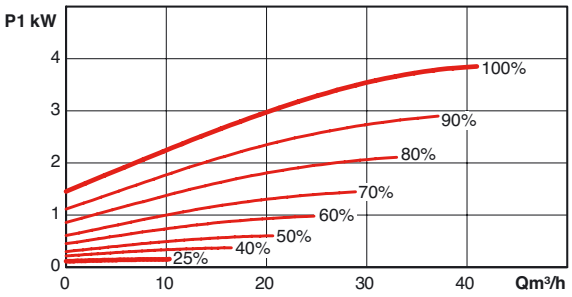

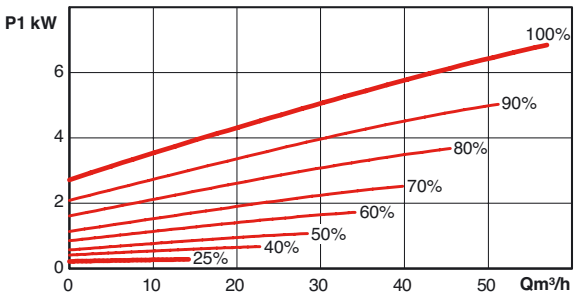

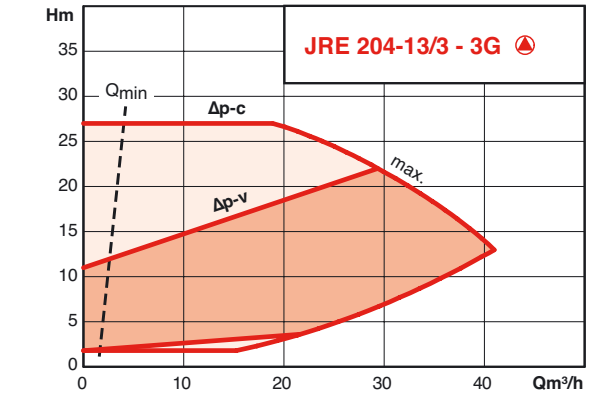

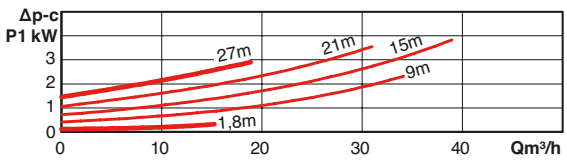

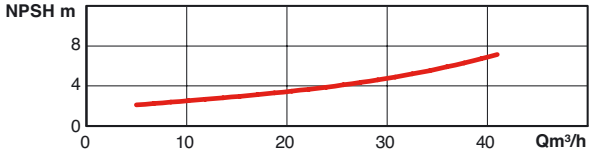

Operation 1 pump

Operation 2 pumps in parallel

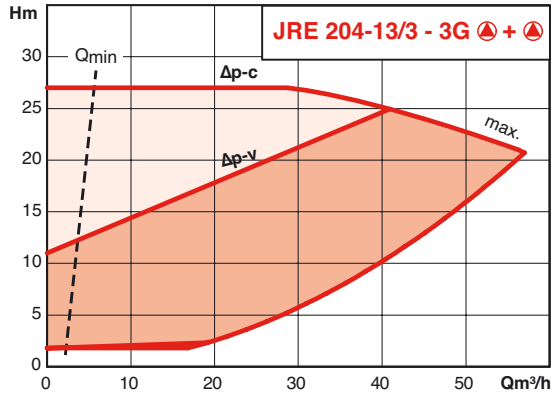

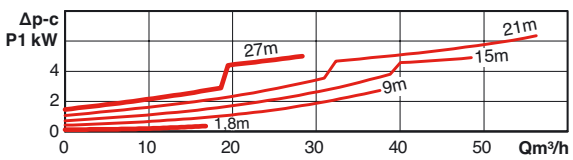

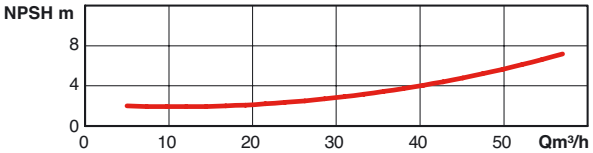

LRE - JRE

HYDRAULIC FEATURES - JRE

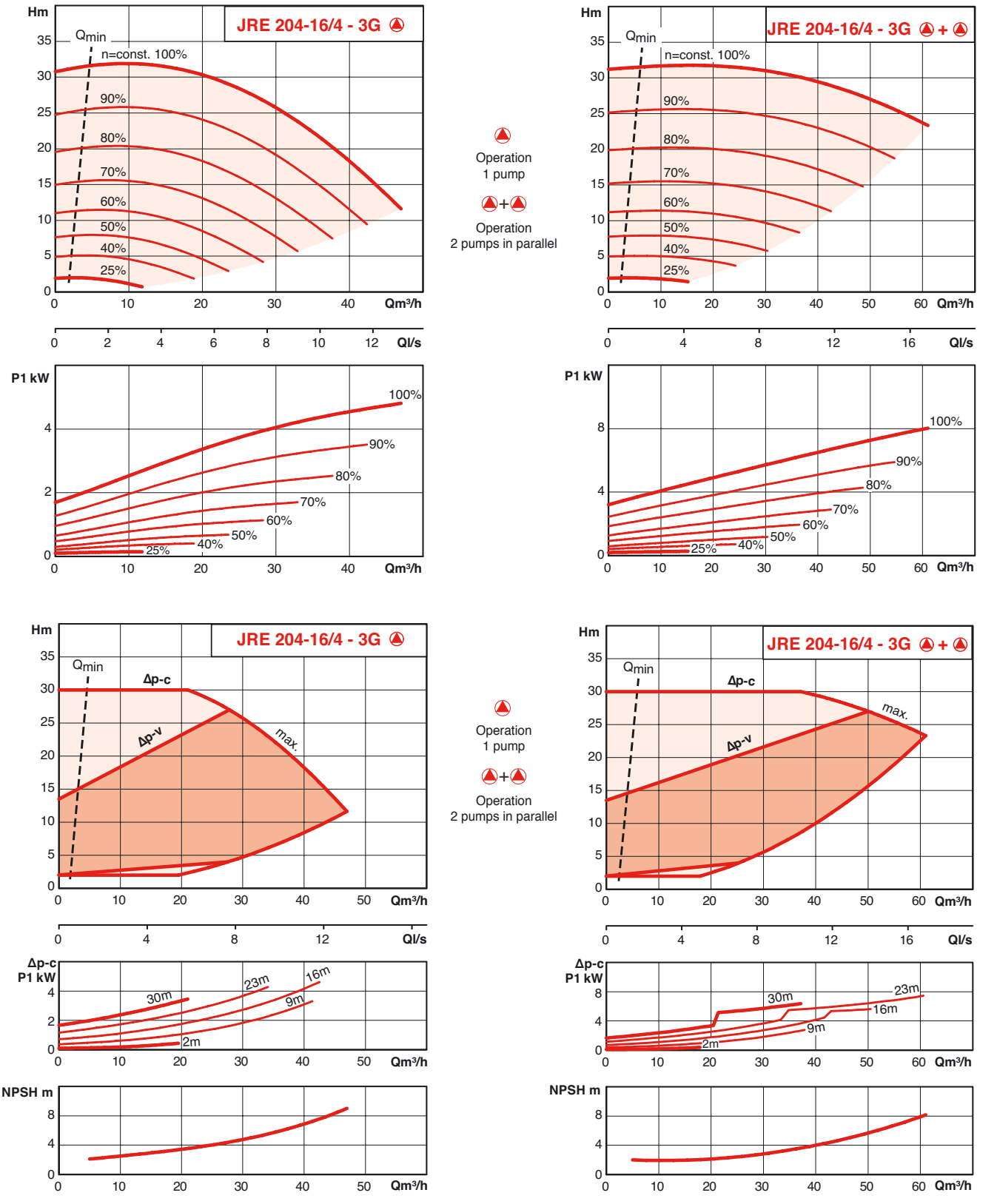

HYDRAULIC FEATURES - JRE

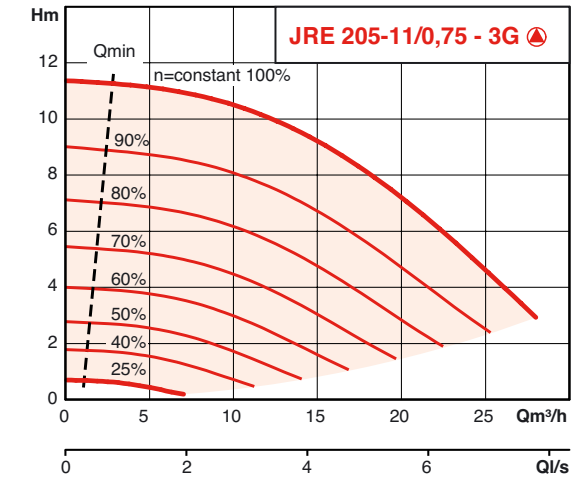

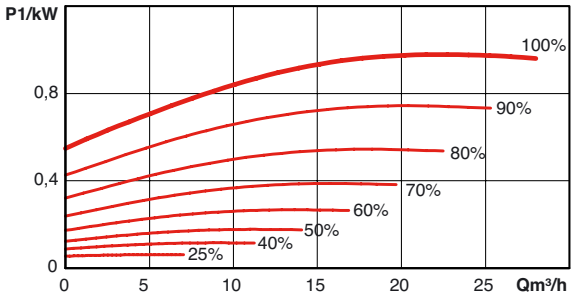

Operation
1 pump

Operation
2 pumps in parallel

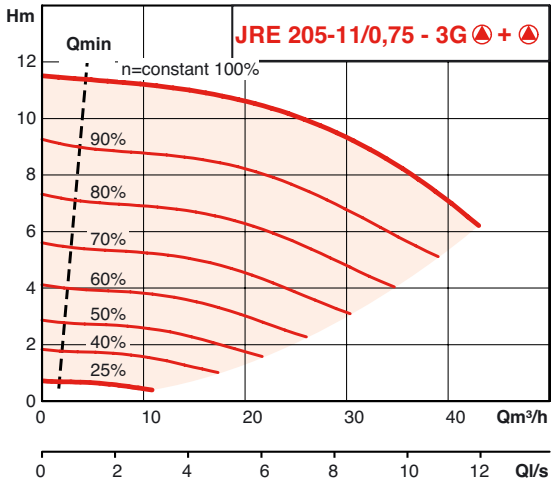

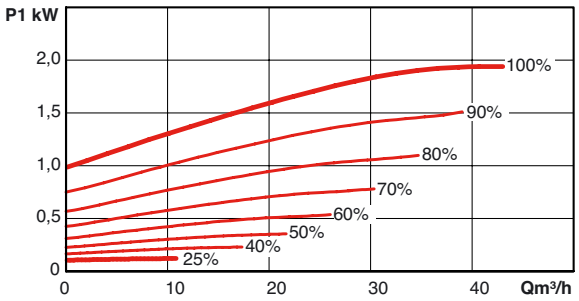

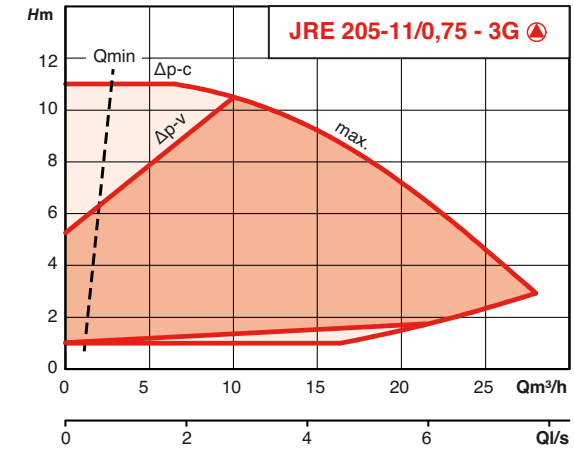

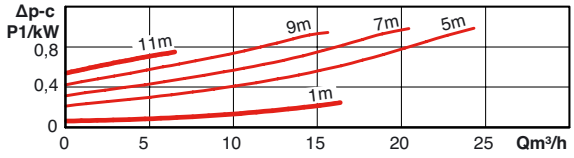

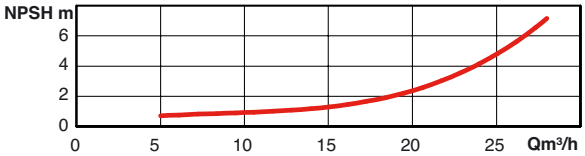

Operation
1 pump

Operation
2 pumps in parallel

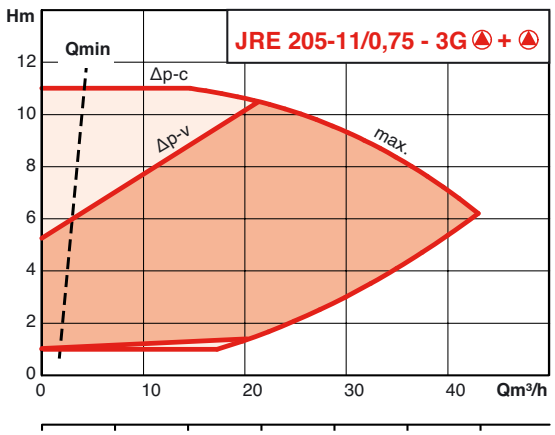

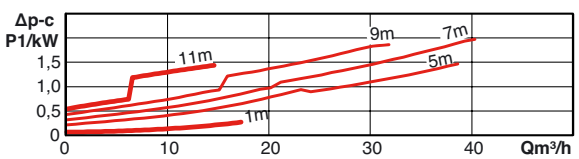

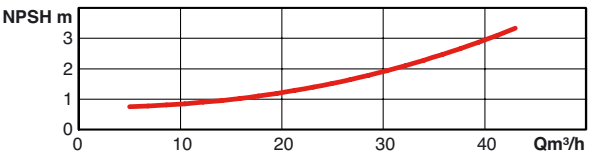

LRE - JRE

HYDRAULIC FEATURES - JRE

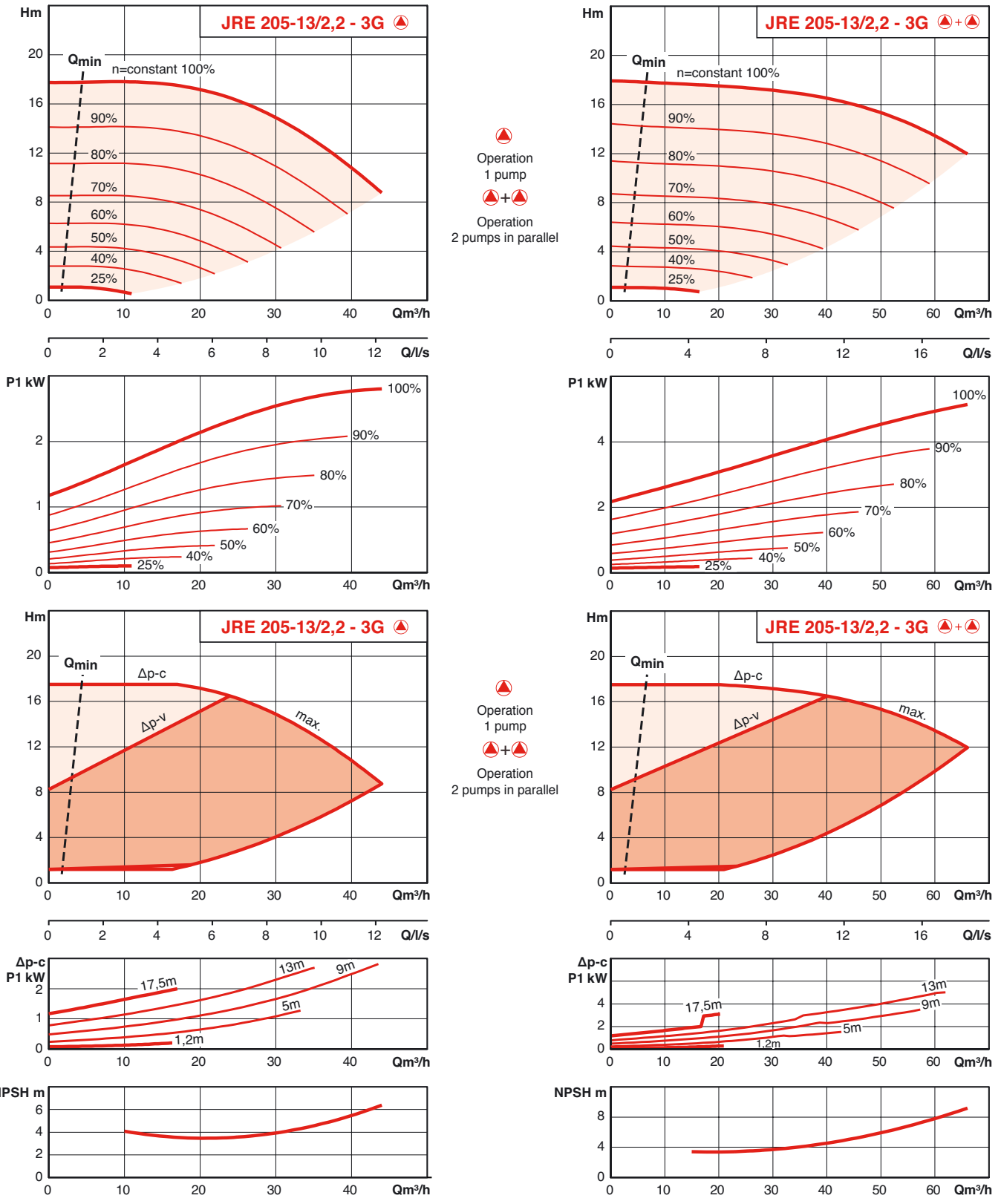

HYDRAULIC FEATURES - JRE

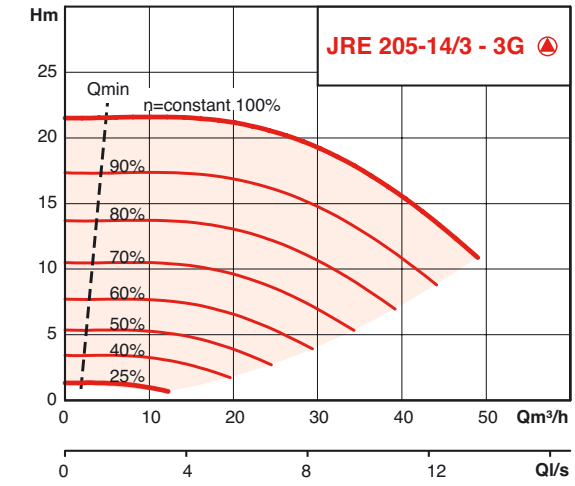



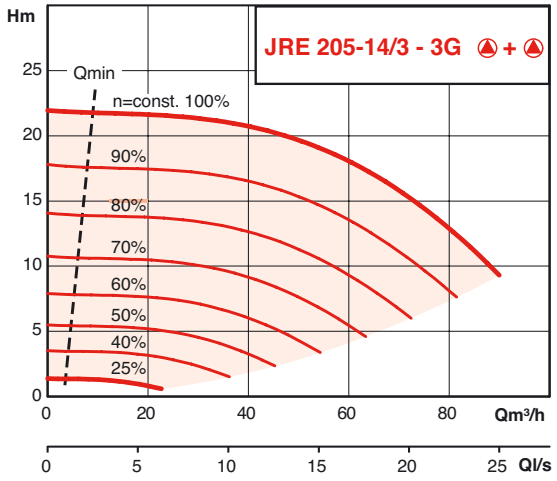

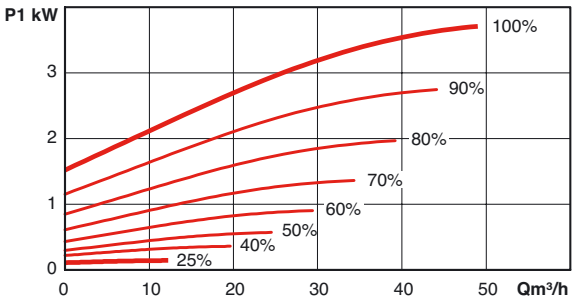

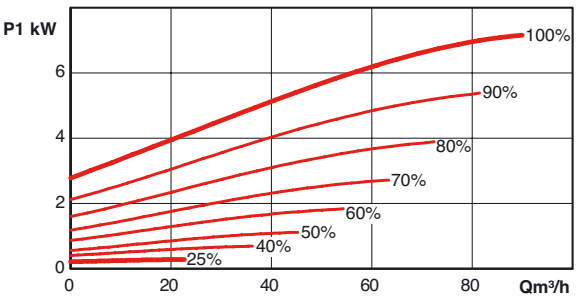

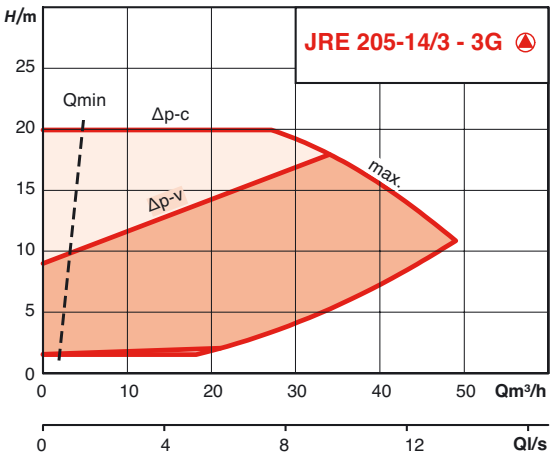



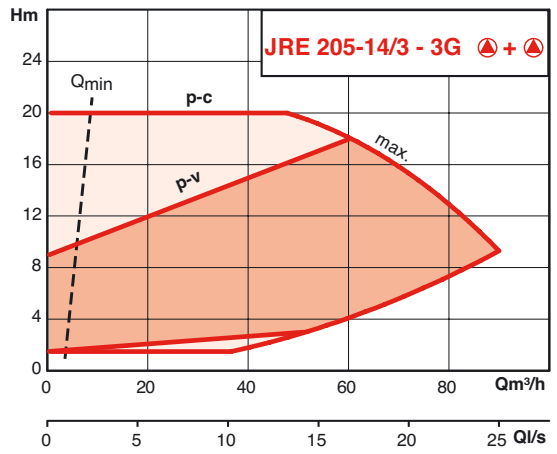

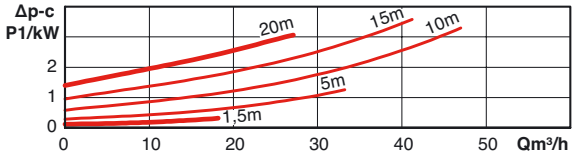

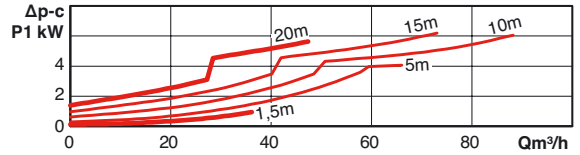

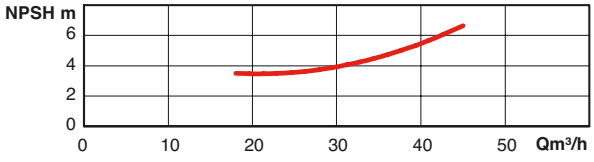

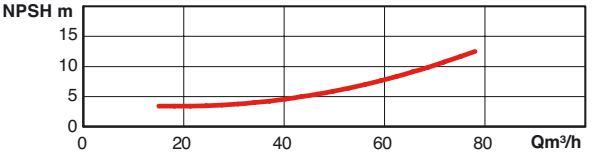

LRE - JRE

HYDRAULIC FEATURES - JRE

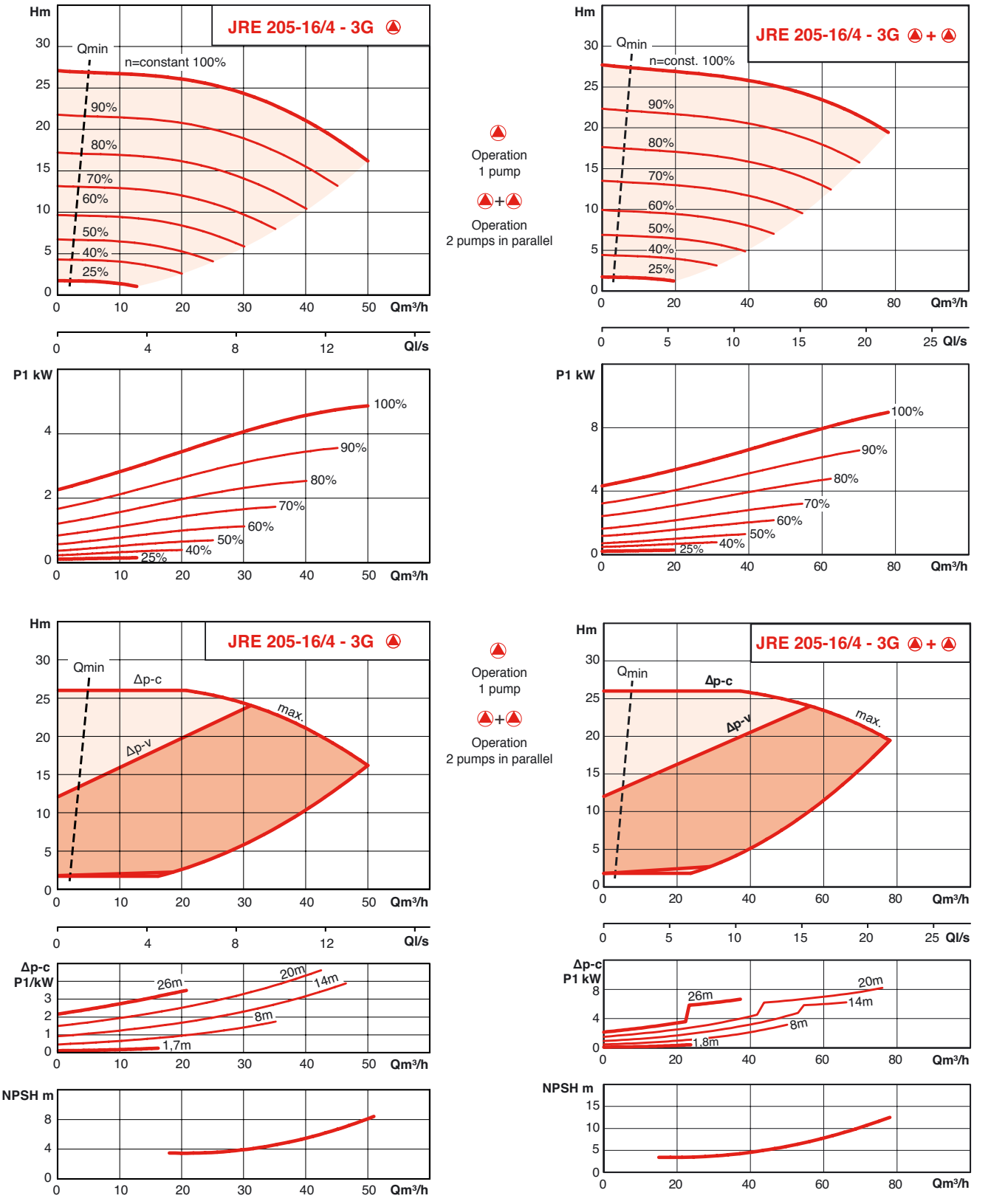

HYDRAULIC FEATURES - JRE

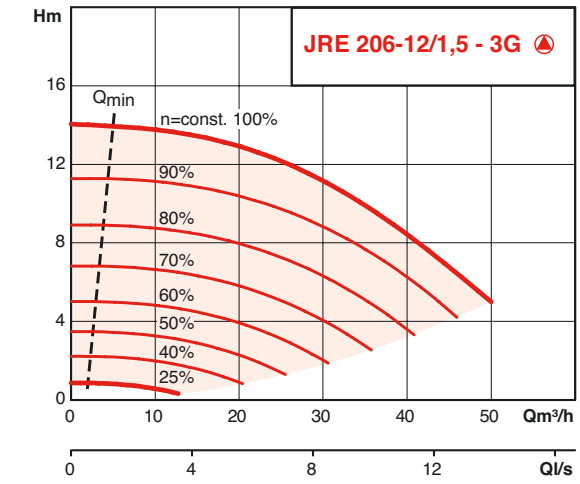

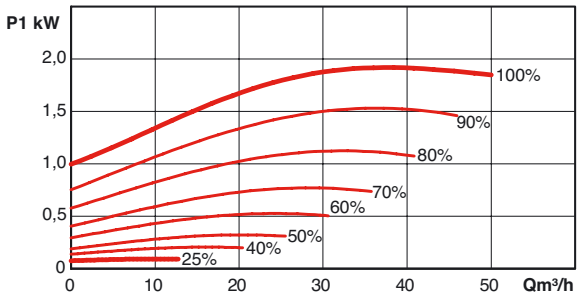

Operation 1 pump

Operation 2 pumps in parallel

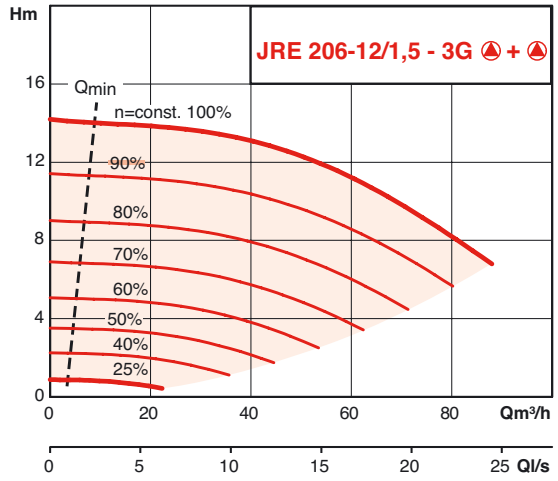

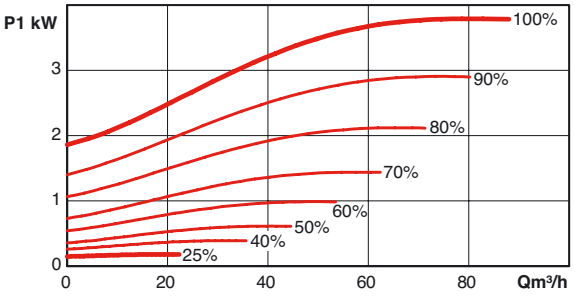

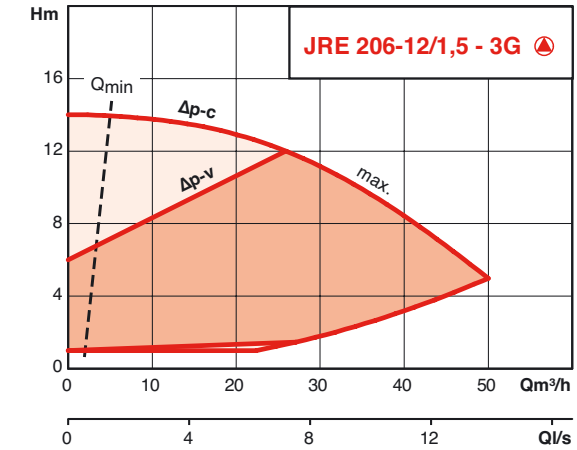

Operation 1 pump

Operation 2 pumps in parallel

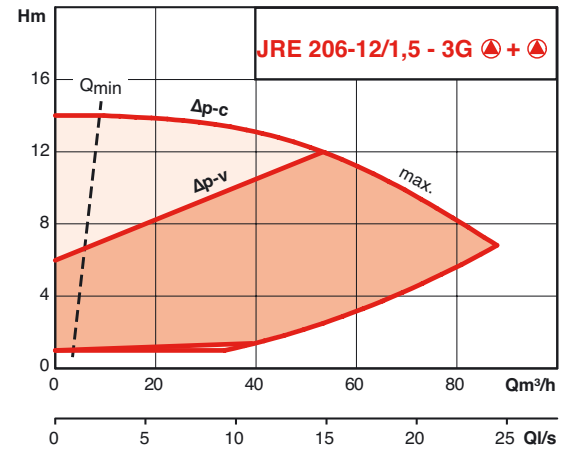

LRE - JRE

HYDRAULIC FEATURES - JRE

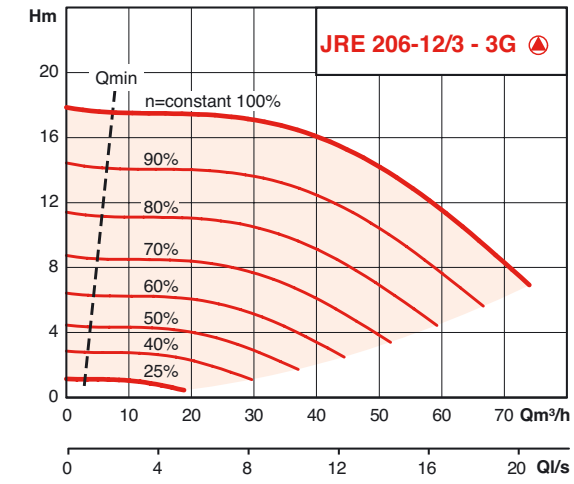

Operation 1 pump

Operation 2 pumps in parallel

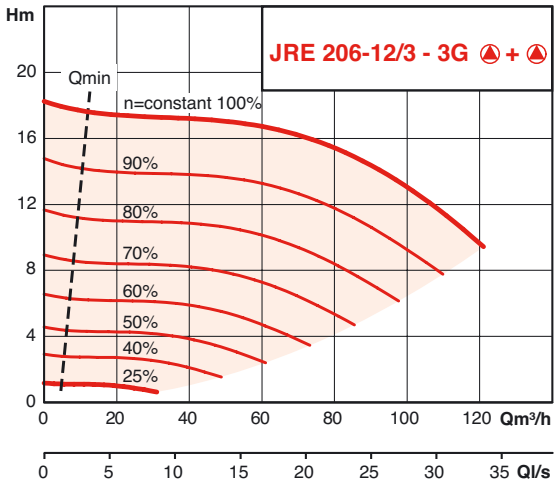

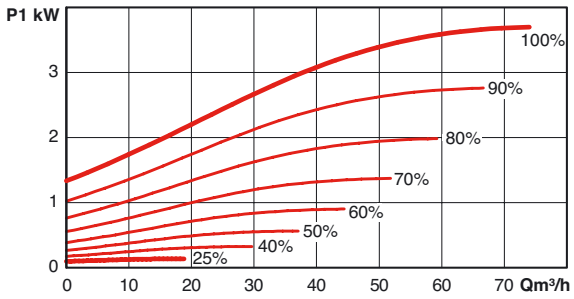

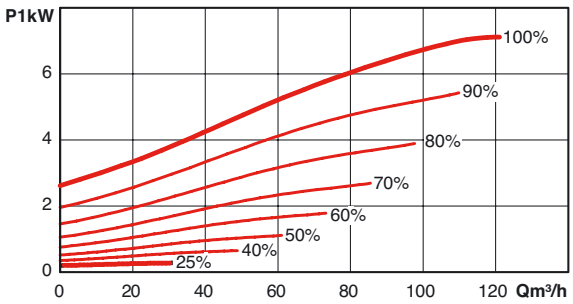

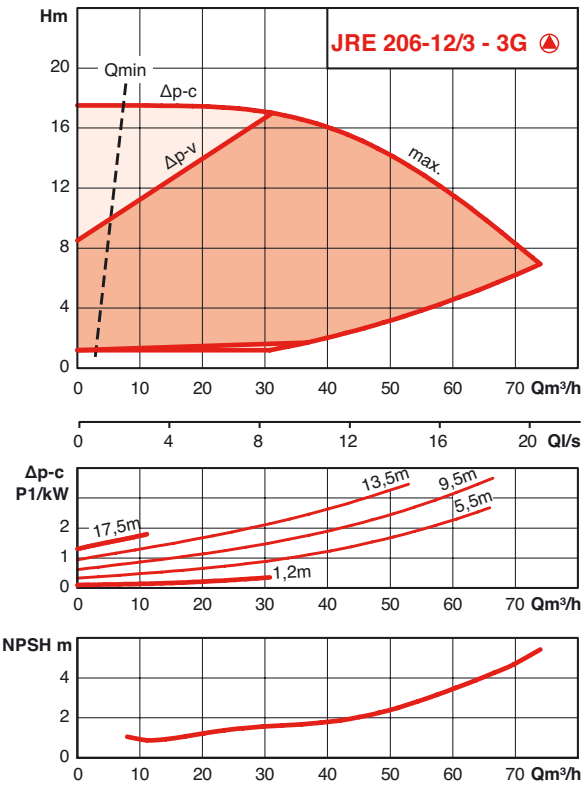

Operation 1 pump

Operation 2 pumps in parallel

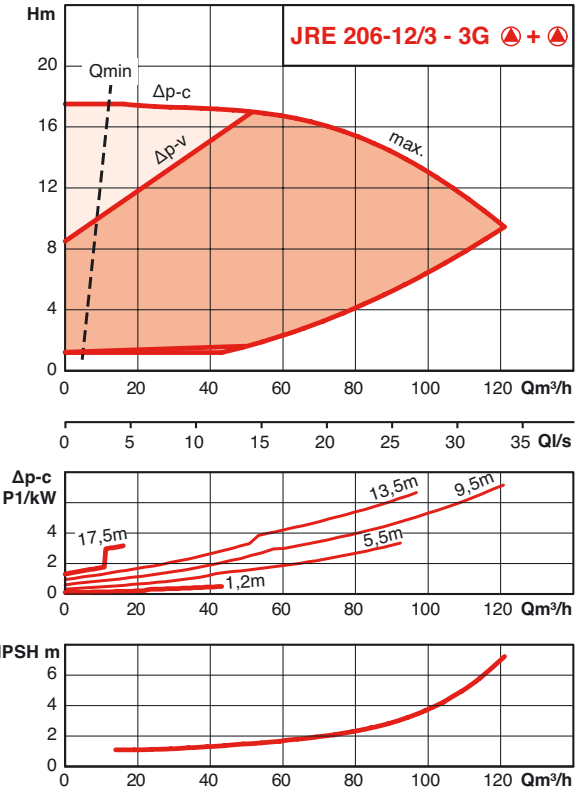

HYDRAULIC FEATURES - JRE

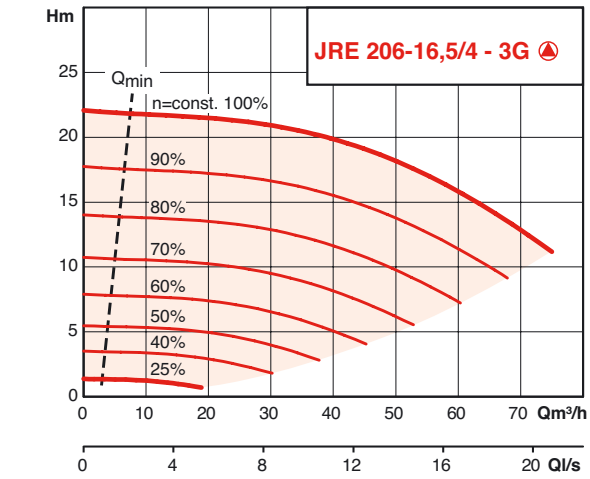

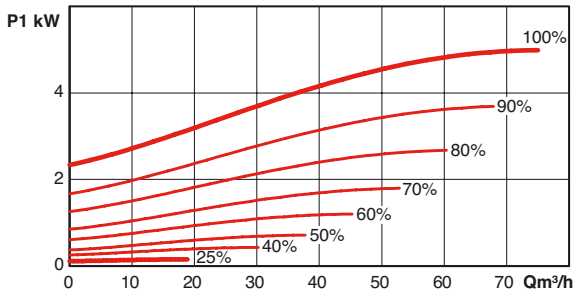

Operation
1 pump

Operation
2 pumps in parallel

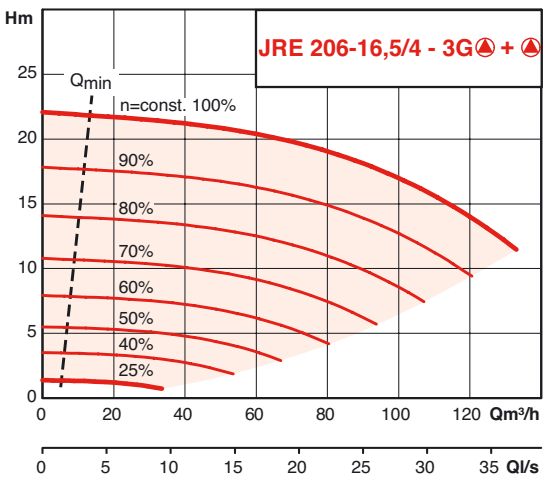

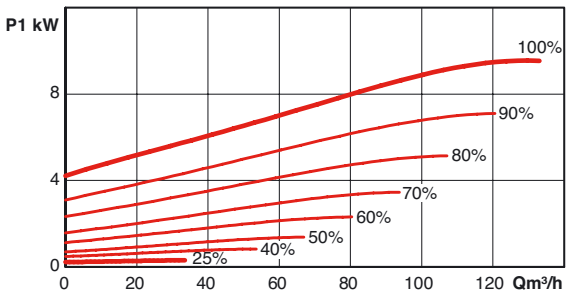

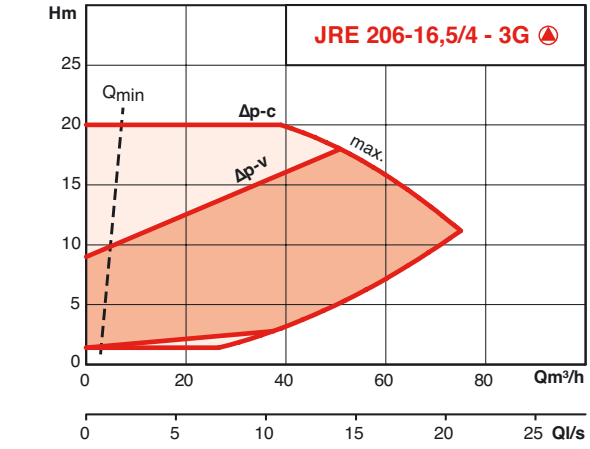

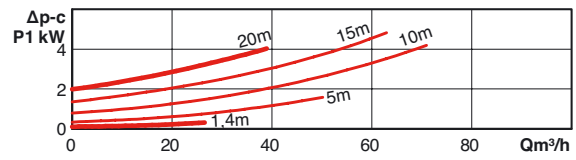

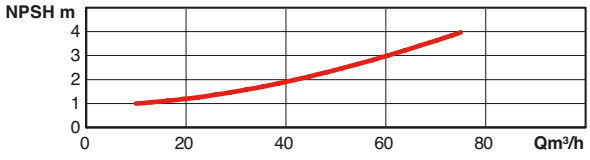

Operation
1 pump

Operation
2 pumps in parallel

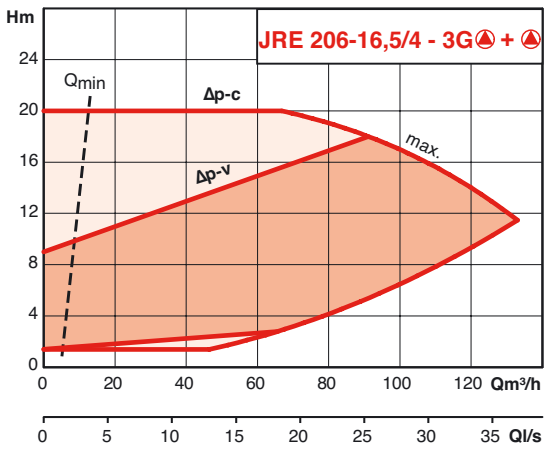

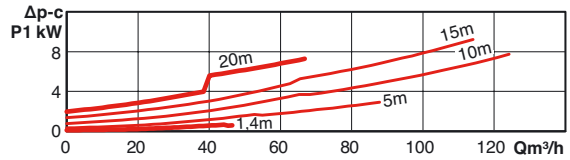

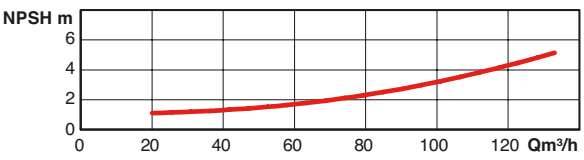

LRE - JRE

HYDRAULIC FEATURES - JRE

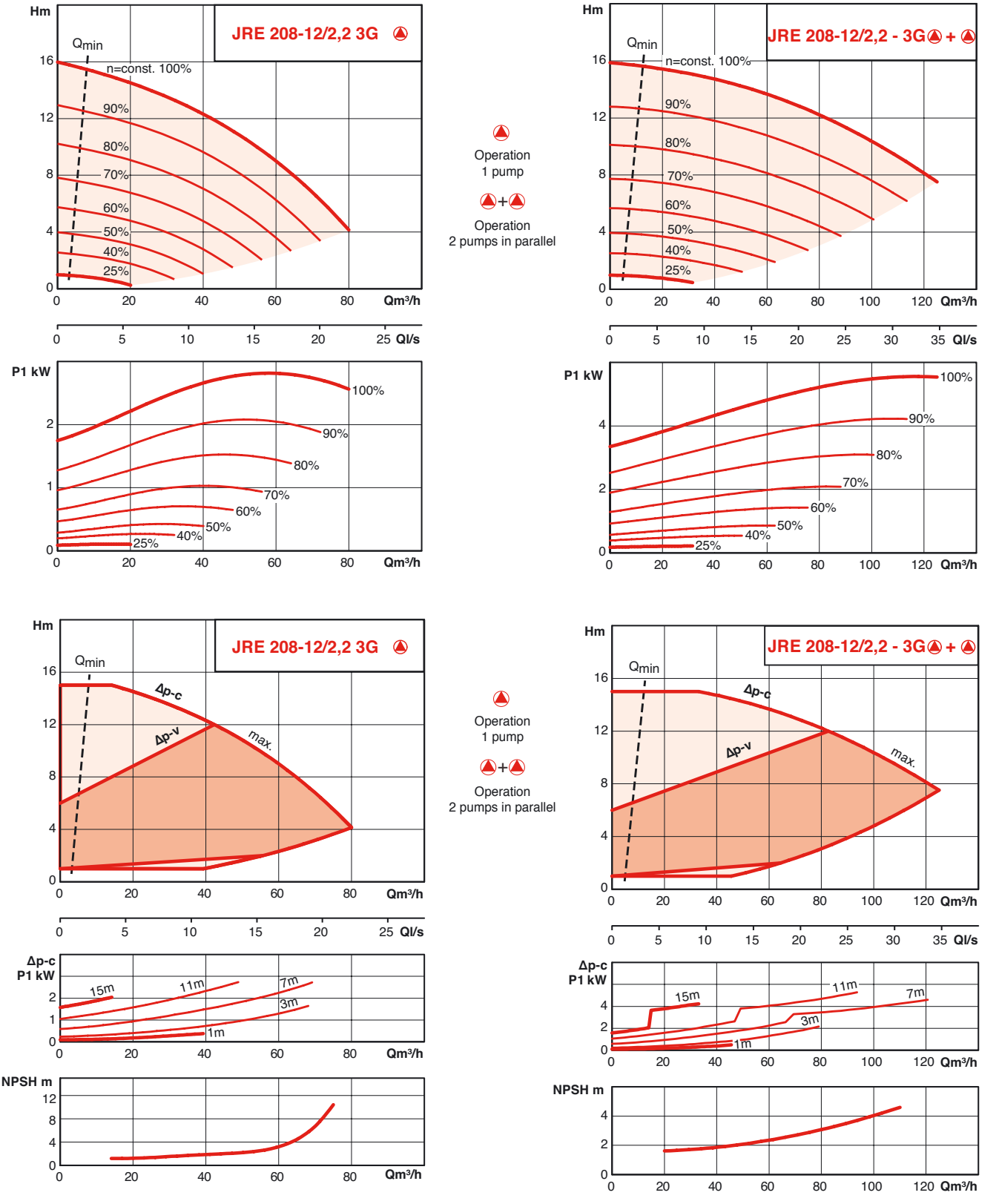

HYDRAULIC FEATURES - JRE

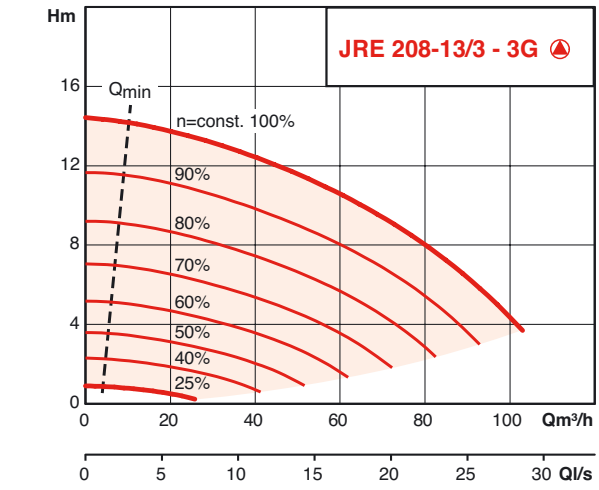

Operation 1 pump

Operation 2 pumps in parallel

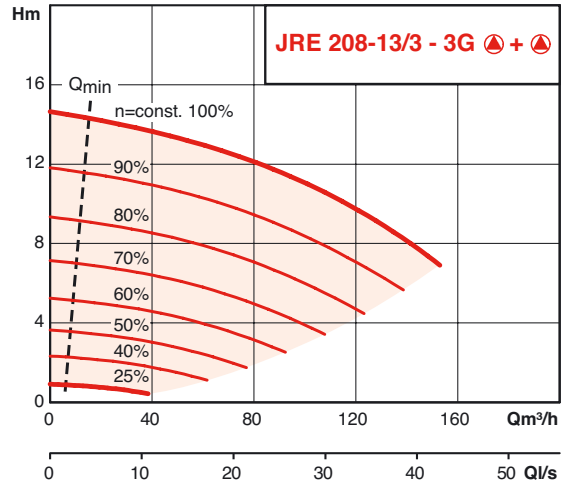

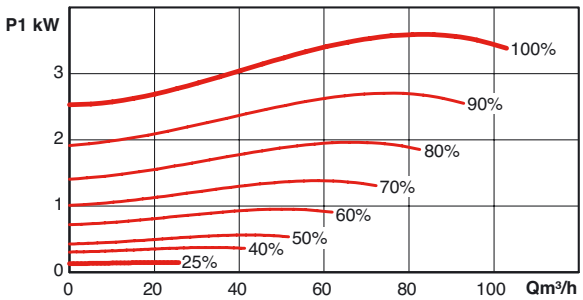

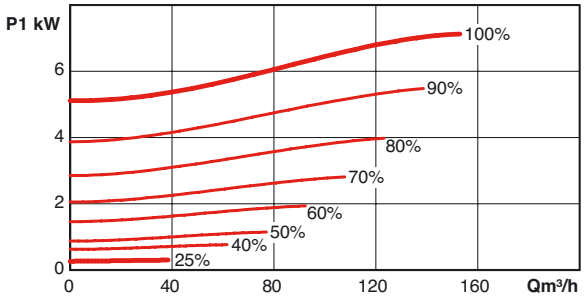

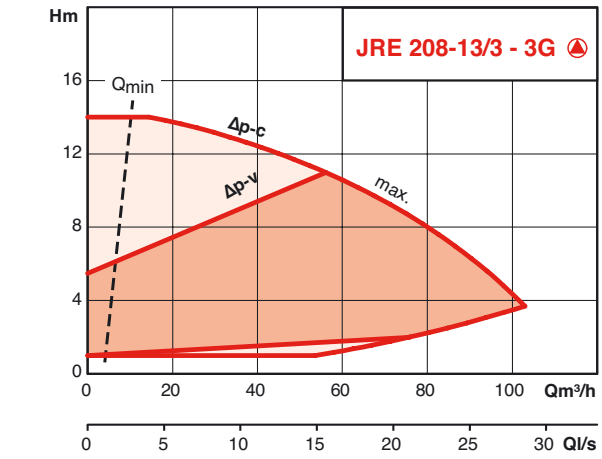

Operation 1 pump

Operation 2 pumps in parallel

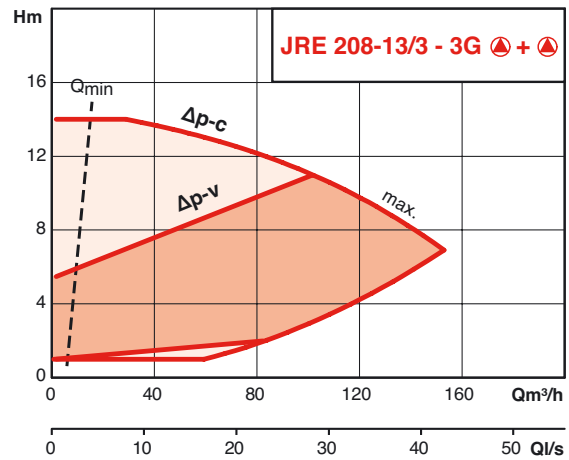

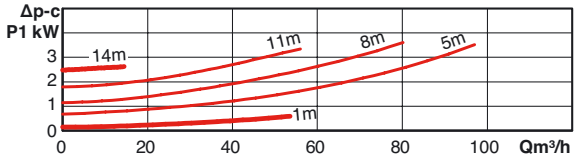

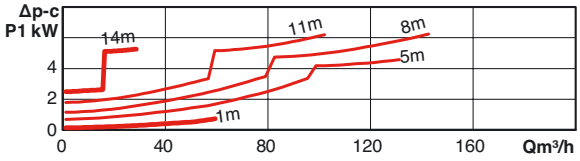

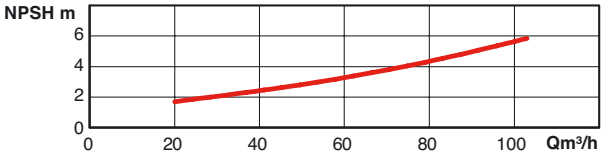

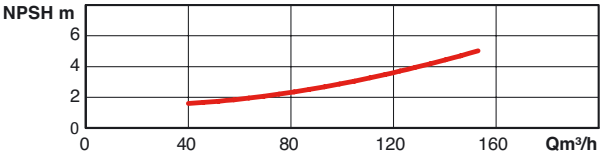

LRE - JRE

HYDRAULIC FEATURES - JRE

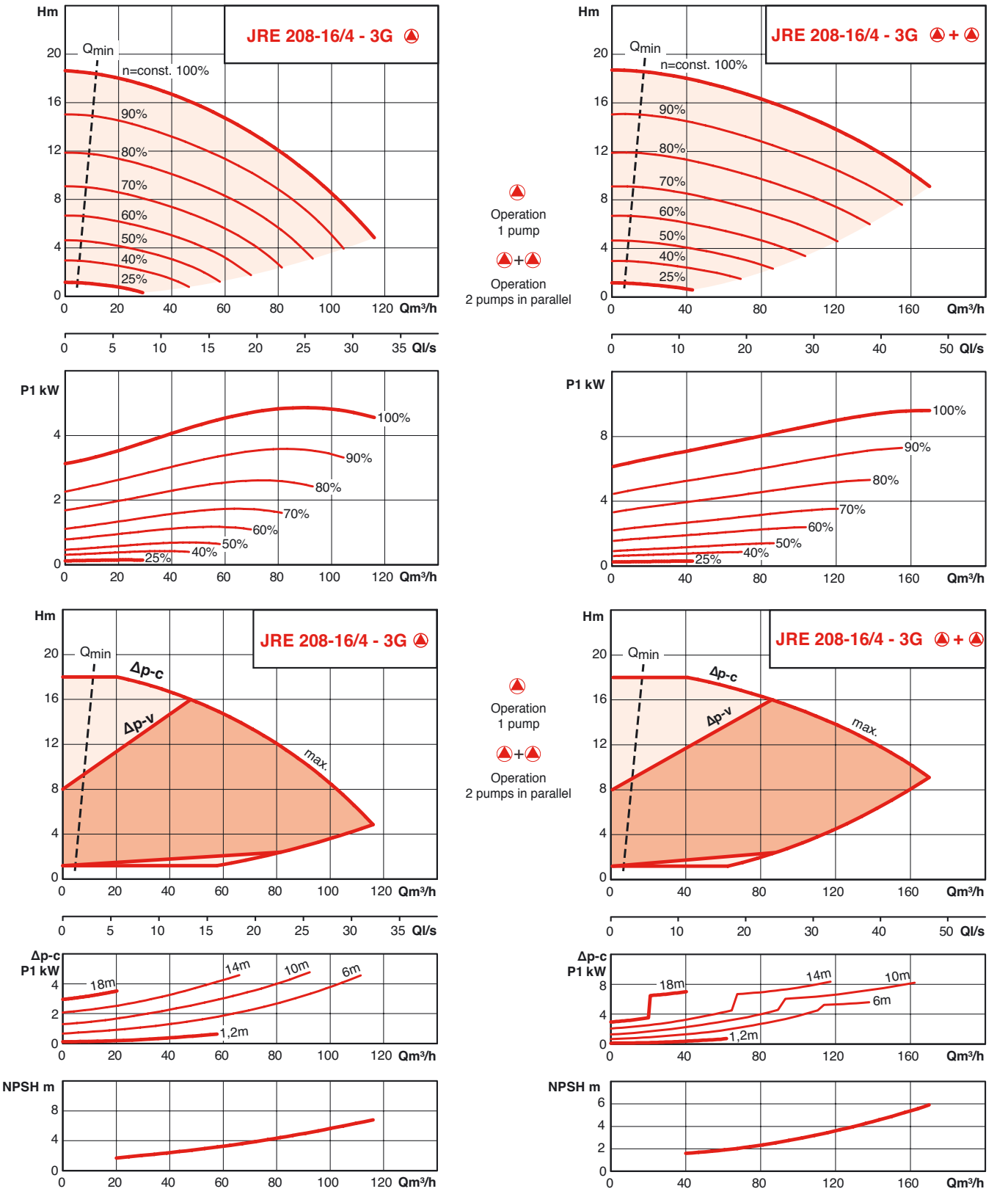

MOUNTING POSITIONS

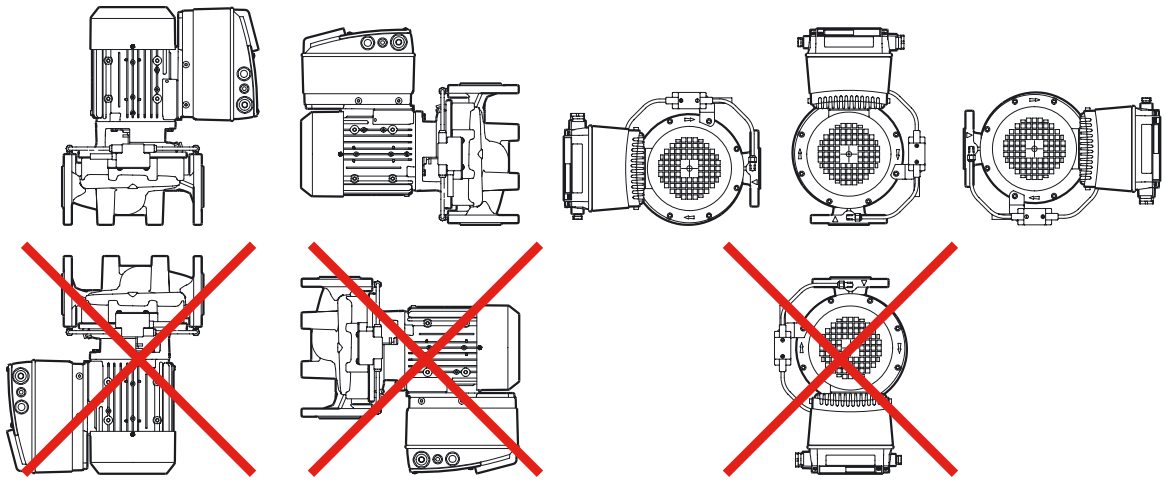

LRE - JRE

JRE: ELECTRICAL CHARACTERISTICS AND SIZES

• Diagram with measurements A

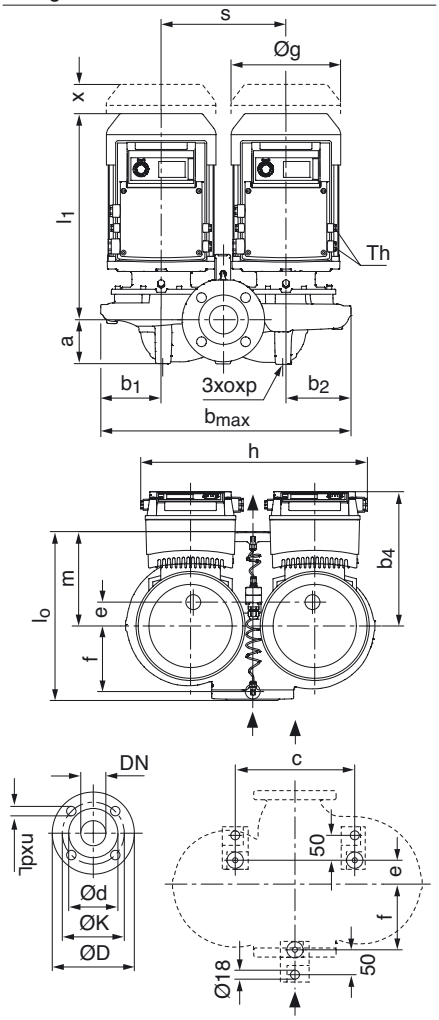

• Diagram with measurements B

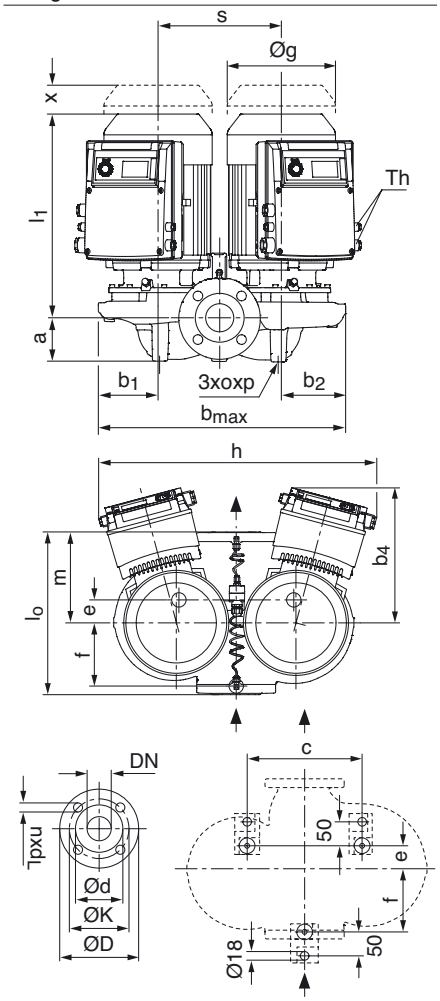

• Diagram with measurements C

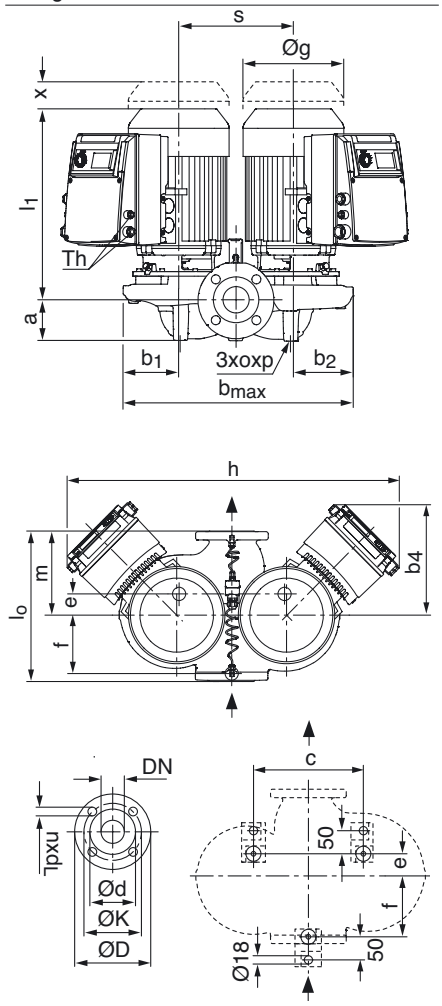

DN2	ØD	Øk	Ød	holes
	mm	mm	mm	n x Ø
32	140	76	100	4 x 19
40	150	84	110	4 x 19
50	165	99	125	4 x 19
65	185	118	145	4 x 19
80	200	132	160	8 x 19

DESCRIPTION	MOTOR						PUMP																					
	Power rating of motor	Rend. motor %	Power factor.	Speed of rotation	Max. power absorbed	Nominal current. (approx.)	DN	a	b max	b1	b2	b4	h	l0	l1	c	e	f	m	o	p	s	Øg	x	mass	Diagram
	P2	η	cos ϕ	rpm	P1	in A																					
	W				W			mm	mm	mm	mm	mm	mm	mm	mm	mm	mm	mm	mm	mm	mm	mm	mm	mm	mm	kg	
JRE 203-10/0.55-3G	550	79	0.76	750 - 2900	800	1.8	32	70	410	100.5	104.5	221	646	260	325	225	56	106	136	M10	20	205	130	150	45	C
JRE 203-11/0.75-3G	750	79	0.81	750 - 2900	1000	3	32	70	410	100.5	104.5	226	656	260	345	225	56	106	136	M10	20	205	146	150	49	C
JRE 203-16/1.1-3G	1100	81,5	0.82	750 - 2900	1500	3.4	32	70	410	100.5	104.5	226	656	260	345	225	56	106	136	M10	20	205	146	150	51	C
JRE204-11/0.55-3G	550	79	0.76	750 - 2900	800	1.6	40	75	350	85	91	233	471	250	320	225	35	97	135	M10	20	174	130	150	48	B
JRE 204-12/1.5-3G	1500	81,3	0.92	750 - 2900	2000	5.2	40	75	456	113	119	246	716	320	351	240	45	135	167	M10	20	224	177	150	73	C
JRE 204-12.5/2.2-3G	2200	83,2	0.9	750 - 2900	2800	6.8	40	75	456	113	119	246	716	320	359	240	45	135	167	M10	20	224	176	150	75	C
JRE 204-13/3-3G	3000	84,6	0.91	750 - 2900	3900	8.8	40	75	456	113	119	257	737	320	386	240	45	135	167	M10	20	224	196	150	87	C
JRE 204-16/4-3G	4000	85,8	0.94	750 - 2900	5000	9.7	40	75	456	113	119	267	759	320	403	240	45	135	167	M10	20	224	220	150	101	C
JRE205-11/0.75-3G	750	79	0.81	750 - 2900	1100	3.1	50	83	390	95	101	240	495	280	346	228	50	107	155	M10	20	194	146	150	52	B
JRE 205-13/2.2-3G	2200	83,2	0.9	750 - 2900	3000	7.7	50	86	500	120	130	246	742	340	361	240	48	132	190	M10	20	250	176	150	76	C
JRE 205-14/3-3G	3000	84,6	0.91	750 - 2900	4000	9.1	50	86	500	120	130	255	466	340	388	240	48	132	190	M10	20	250	196	150	88	A

JRE : ELECTRICAL CHARACTERISTICS AND SIZES

DESCRIPTION	MOTOR						PUMP																								
	Power rating of motor	Rend. motor %	Power factor.	Speed of rotation	Max. power absorbed	Nominal current. (approx.)	DN	a	b max	b1	b2	b4	h	l0	l1	c	e	f	m	o	p	s	Øg	x	mass	Diagram
	P2	η	cos ϕ	rpm	P1	in A																					
	W				W			mm	mm	mm	mm	mm	mm	mm	mm	mm	mm	mm	mm	mm	mm	mm	mm	mm	kg	
JRE 205-16/4-3G	4000	85,8	0.94	750 - 2900	5200	11.5	50	86	500	120	130	270	466	340	405	240	48	132	190	M10	20	250	220	150	102	A
JRE 206-12/1.5-3G	1500	81,3	0.92	750 - 2900	2000	5.1	65	93	432	103	116.5	260	547	340	367	225	25	137	185	M10	20	212	177	150	80	B
JRE 206-12/3-3G	3000	84,6	0.91	750 - 2900	3900	9.6	65	93	550	125	135	255	506	340	394	240	43	137	185	M10	20	290	196	150	96	A
JRE 206-16.5/4-3G [1]	4000	85,8	0.94	750 - 2900	5200	11.6	65	93	550	125	135	270	506	340	411	240	43	137	185	M10	20	290	220	150	110	A
JRE 208-12/2.2-3G	2200	83,2	0.9	750 - 2900	2900	6.8	80	100	480	113	131.5	260	568	360	376	240	43	137	205	M10	20	235	176	150	88	B
JRE 208-13/3-3G [2]	3000	84,6	0.91	750 - 2900	3900	9.3	80	103	601	134	147	255	536	360	400	240	30	150	192	M10	20	320	196	150	99	A
JRE 208-16/4-3G [3]	4000	85,8	0.94	750 - 2900	5200	11.6	80	103	601	134	147	270	536	360	417	240	30	150	192	M10	20	320	220	150	113	A

1) Available until by end 2013, replacement model JRE 206-13/4-3G / 2) Available until by end 2013, replacement model JRE-10,5/3-3G /

3) Available until by end 2013, replacement model JRE 208-11/4-3G /

LRE: ELECTRICAL CHARACTERISTICS AND SIZES

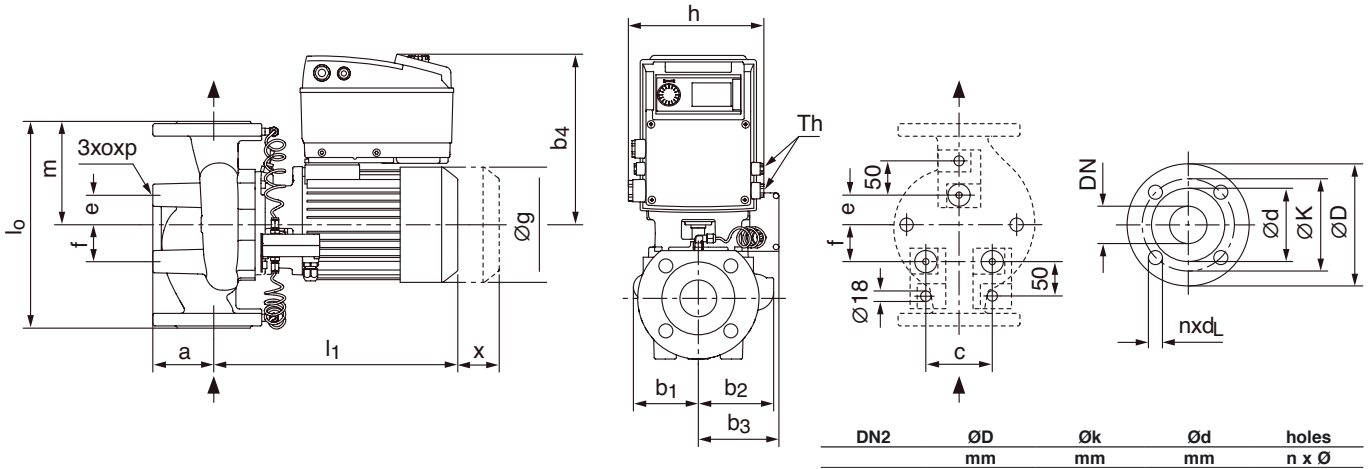

DN2	ØD	Øk	Ød	holes
	mm	mm	mm	n x Ø
32	140	100	76	4 x 19
40	150	110	84	4 x 19
50	165	125	99	4 x 19
65	185	145	118	4 x 19
80	200	160	132	8 x 19

DESCRIPTION	MOTOR						PUMP																		
	Power rating of motor	Rend. motor %	Power factor.	Speed of rotation	Max. power absorbed.	Nominal current. (approx.)	DN	L0	L1	A	B1	B2	B3	B4	H	C	E	F	M	O	P	X	ØG	mass
	P2	η	cos ϕ	rpm	P1	in A																			
	W				W			mm	mm	mm	mm	mm	mm	mm	mm	mm	mm	mm	mm	mm	mm	mm	mm	mm	kg
LRE 203-10/0.55-3G	550	79	0.76	750 - 2900	800	1.9	32	260	325	70	101	106	189	216	141	90	40	50	130	20	M10	150	130	25
LRE 203-11/0.75-3G	750	79	0.81	750 - 2900	1100	2.9	32	260	345	70	101	106	189	223	141	90	40	50	130	20	M10	150	146	27
LRE 203-16/1.1-3G	1100	81.5	0.82	750 - 2900	1500	4.1	32	260	345	70	101	106	189	223	159	90	40	50	130	20	M10	150	146	29
LRE 204-11/0,55-3G	550	79	0.76	750 - 2900	800	1.8	40	250	320	65	80	90	162	216	141	-	110	110	125	20	M10	150	130	25
LRE 204-12.5/2.2-3G	2200	83.2	0.9	750 - 2900	2700	6.4	40	320	359	75	113	121	189	240	176	90	40	50	160	20	M10	150	176	38
LRE 204-12/1.5-3G	1500	81.3	0.92	750 - 2900	2000	5.2	40	320	351	75	113	121	189	240	159	90	40	50	160	20	M10	150	177	37
LRE 204-13/3-3G	3000	84.6	0.91	750 - 2900	3900	8.8	40	320	386	75	113	121	189	255	176	90	40	50	160	20	M10	150	196	44
LRE 204-16/4-3G	4000	85.8	0.94	750 - 2900	4700	10.1	40	320	403	75	113	121	189	270	197	90	40	50	160	20	M10	150	220	51
LRE 205-11/0,75-3G	750	79	0.81	750 - 2900	1100	3.2	50	280	346	75	91	101	162	223	141	-	125	125	140	20	M10	150	146	30
LRE 205-13/2.2-3G	2200	83.2	0.9	750 - 2900	2900	6.6	50	340	361	86	116	131	189	240	176	104	40	50	170	20	M10	150	176	41
LRE 205-14/3-3G	3000	84.6	0.91	750 - 2900	3800	8.8	50	340	388	86	116	131	189	255	176	104	40	50	170	20	M10	150	196	47
LRE 205-16/4-3G	4000	85.8	0.94	750 - 2900	5200	11.7	50	340	405	86	116	131	189	270	197	104	40	50	170	20	M10	150	220	54
LRE 206-12/1.5-3G	1500	81.3	0.92	750 - 2900	2000	5.2	65	340	367	80	100	118	167	240	159	-	155	155	170	20	M10	150	177	41
LRE 206-12/3-3G	3000	84.6	0.91	750 - 2900	3900	9.5	65	340	392	93	111	132	189	255	212	135	32	63	162	20	M10	150	196	50
LRE 206-13/4-3G	4000	85.8	0.94	750 - 2900	4900	10.8	65	340	408.5	93	111	132	189	270	212	135	32	63	162	20	M10	150	220	57
LRE 208-12/2.2-3G	2200	83.2	0.9	750 - 2900	2700	6.5	80	360	376	98	110	135	167	240	176	-	165	165	180	20	M10	150	176	46
LRE 208-13/3-3G [4]	3000	84.6	0.91	750 - 2900	3700	8.5	80	360	400	105	125	153	189	255	176	135	40	55	180	20	M10	150	196	53
LRE 208-16/4-3G	4000	85.8	0.94	750 - 2900	4900	10.9	80	360	417	105	125	153	189	270	197	135	40	55	180	20	M10	150	220	60

1) Available until by end 2013, replacement model LRE 208-10,5/3-3G

LRE - JRE

FEATURES (LRE -JRE)

a) Electrical

- All types three-phase 400V-50Hz.
- Built-in motor protection with sensor on each winding.
- Built-stop in the event of voltage surge or overheating.

b) Mounting

- Directly onto horizontal or vertical pipework. Connect to the installation by round soldered backflanges nominal press. 10/16 (not provided).

The system must provide protection of the pump against bad weather and frost (do not expose to direct sunlight or rain).

c) Packaging

Pumps delivered with frequency converter and differential pressure sensor, without backflanges.

d) Maintenance

Standard repair or exchange of the complete pump.

ACCESSORIES

- Round soldered backflanges nominal press. 10/16.
- Shut-off valves.
- IF Module (ModBUS, LON, BACnet S/TP, CAN, digital PLR interface)[1]

1) See table of functions

OPERATING RANGE

Flow rates up to:	900 m³/h
Mano. head up to:	105 m
Max. operating pressure:	
	13 bar up to +140°C
	16 bar up to +120°C
Temperature:	–20° to +140°C
Opening DN:	32 to 200
Reference MEI*:	≥ 0,10

*Minimum Efficiency Index

SIL

SINGLE IN-LINE PUMPS
Heating - Air conditioning - E.C.S.*
50 Hz
***A.C.S. standard: contact us**

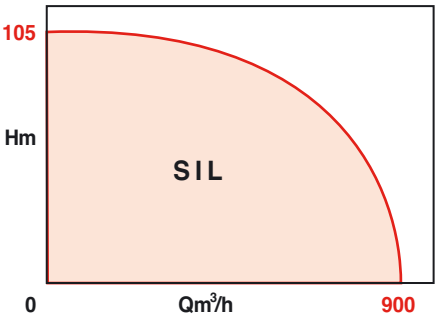

APPLICATIONS

- Heating water circuits according to VDI2035.
- Iced water and glycol water circuits (20 to 40% of glycol) and max. T° 40°C.
- Cooling water circuits.
- Domestic hot water loop.

A.C.S. standard : contact us.

- For all industries involved in pumping clear water without abrasive particles which are chemically neutral and non-explosive.

ADVANTAGES

- **High hydraulic output**
- **Low electricity consumption**
- **Direct assembly on (horizontal or vertical) piping or on solid equipment**
- **Low sound levels**
- **Completely interchangeable between single and double pumps.**

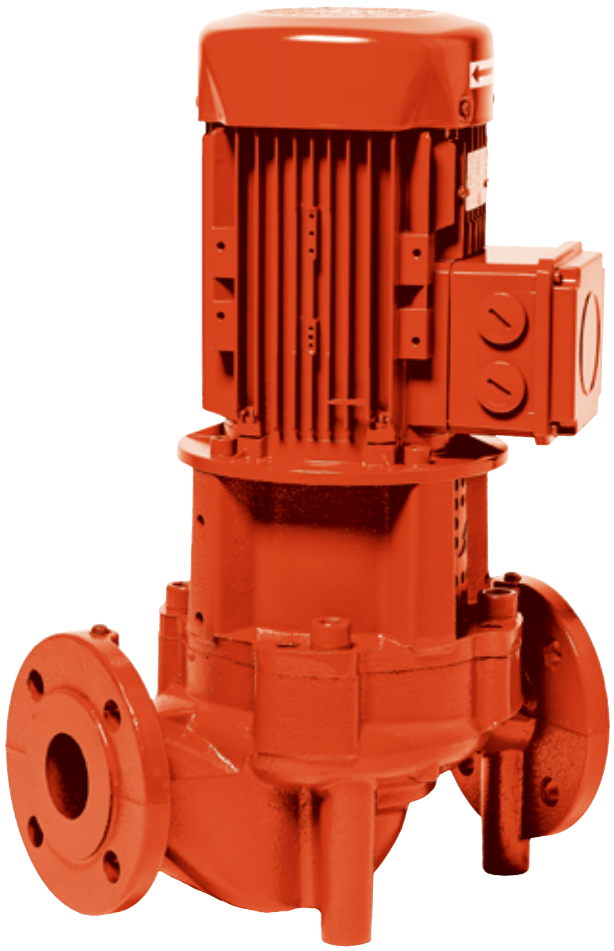

SIL

DESIGN

• Hydraulic section
- Centrifugal, single cell
- Flanged body, in-line openings
- Flanges fitted with pressure taps
- Hydraulically and dynamically balanced impellers
- Imperviousness provided with standard mechanical seal

• Lantern
Fitted with condensate recuperation holes in vertical and horizontal positions

• Motor
IE2
Standard flanged Coupled to the pump with rigid coupling

Speed:	950, 1450 and 2900 rpm
3 ~ winding ≤ 3 kW:	230 V Δ 50 Hz
	400 V Y 50 Hz
three phase ≥ 4 kW:	400 V Δ 50 Hz
Insulation category:	155 (F)
Protection index:	IP55
EC compliance:	EN 809

Options: isothermal protection,60Hz... (contact us)

BASIC CONSTRUCTION

Main parts	Material
Pump body	Cast iron EN GJL250 EN GJS400-18-LT*
Impeller	Cast iron EN GJL250 Bronze*
Lantern	Cast iron EN GJL250
Shaft	Steel X39 Cr Mo 17.1
Mechanical seal**	Graphite/Silicon carbide/EP

* Options: contact us
** Other mechanical seals, contact us

IDENTIFICATION

SIL 2 05 - 16/5,5 - P2
4 05 - 17/1,1 - P2

SIL: single pump code
2 pole: 2900 rpm
4 pole: 11450 rpm
6 pole: 950 rpm
nominal Ø of openings in cm
nominal Ø of impeller in cm
Motor power in kW
Option : ACS version (contact us)

REPRESENTATIVE CROSS-SECTION

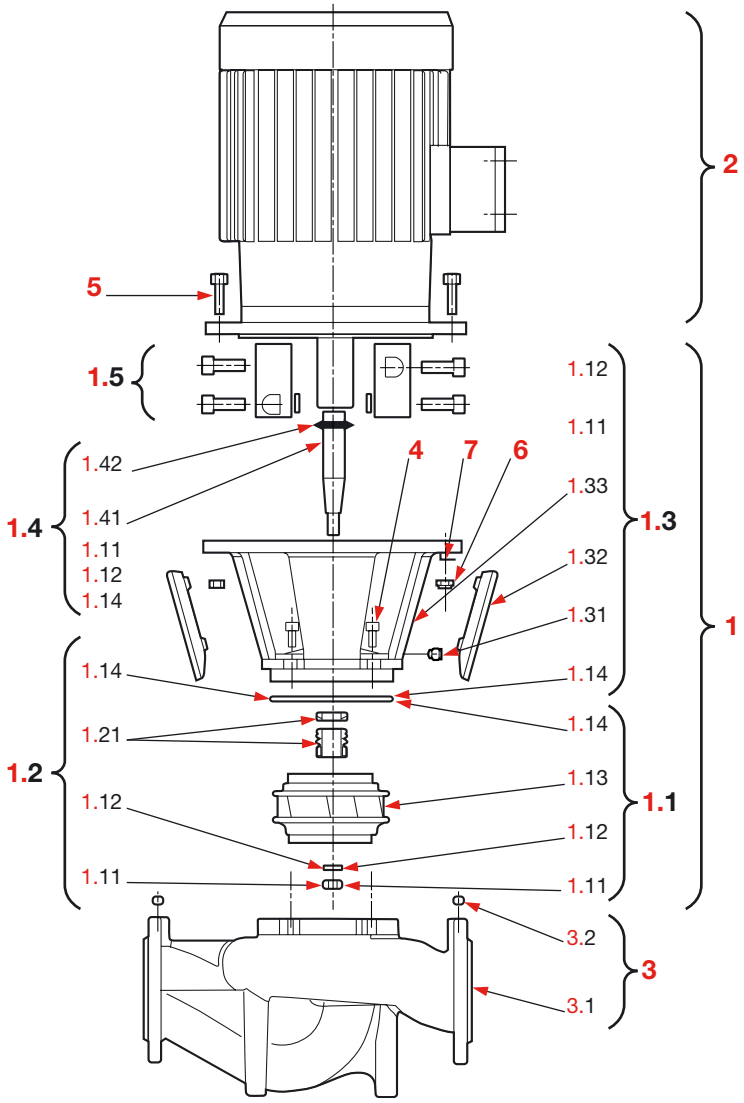

PARTS LIST

1. Complete batch
- 1.1 Set of spare parts including
  - 1.11 Nut
  - 1.12 Washer
- 1.13 Impeller
- 1.14 JO-ring
- 1.2 Set of mechanical seal spare parts including
  - 1.21 Complete mechanical seal
- 1.3 Set of lantern spare parts including
  - 1.31 Purger screw
  - 1.32 Coupling protector
  - 1.33 Lantern
- 1.4 Set of shaft spare parts including
  - 1.41 Shaft
  - 1.42 Spring retaining ring
- 1.5 Complete coupling

2. Motor

3. Complete pump body with
- 3.1 Pump body
- 3.2 Plug for pressure openings

4. Attachment screw for lantern/pump

5. Attachment screw for motor/lantern

6. Nut for motor/lantern attachment

7. Washer for motor/lantern attachment

GENERAL PRE-SELECTION GRAPH

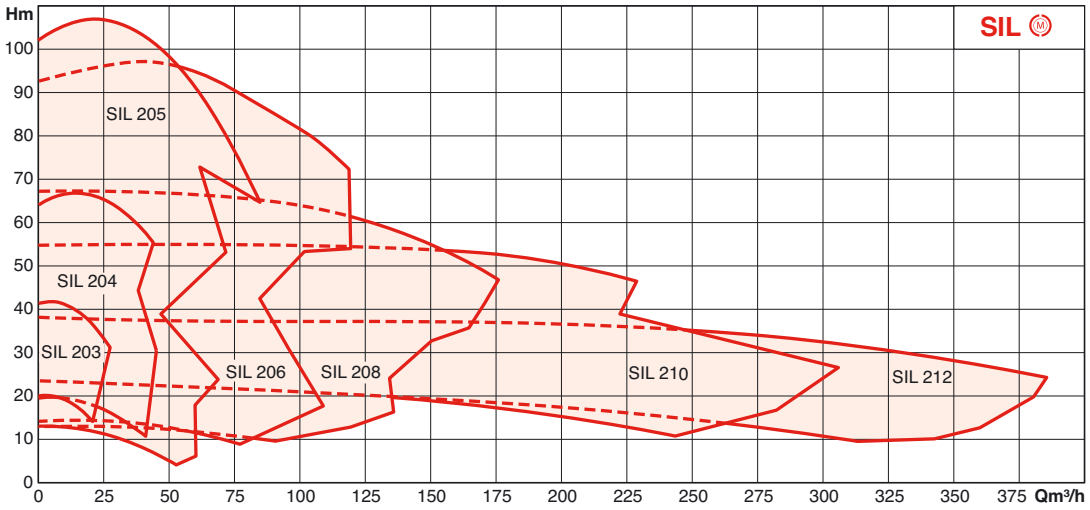

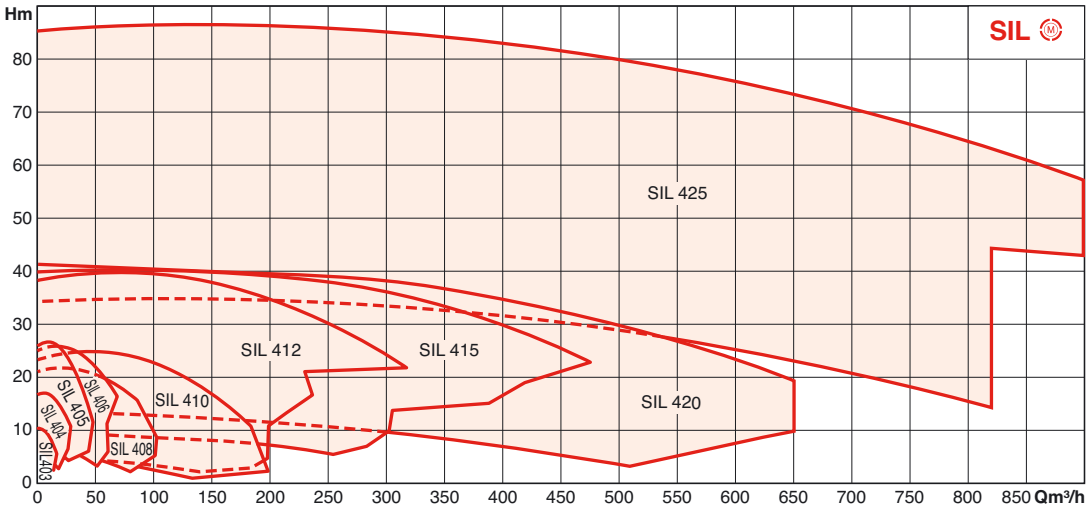

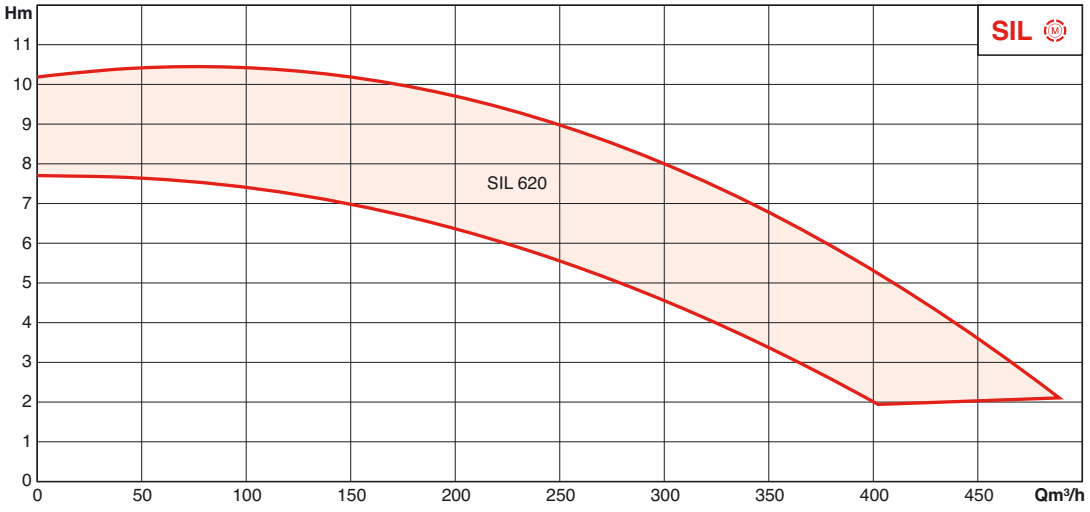

SIL

HYDRAULIC PERFORMANCES - SIL 4 POLE

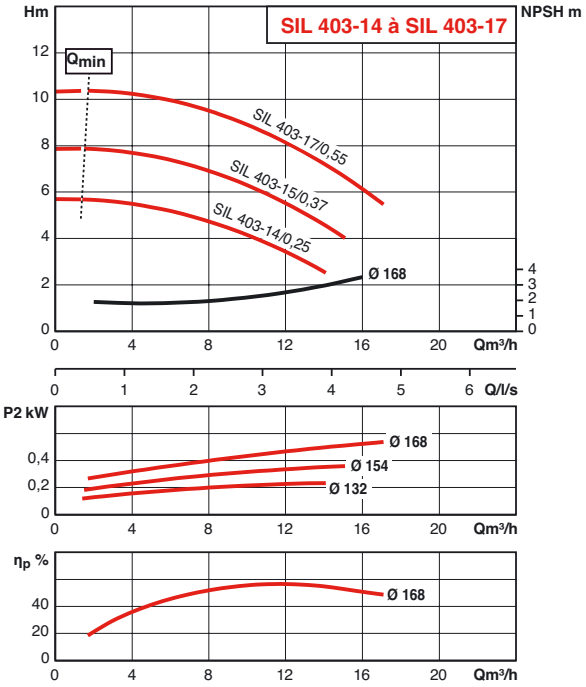

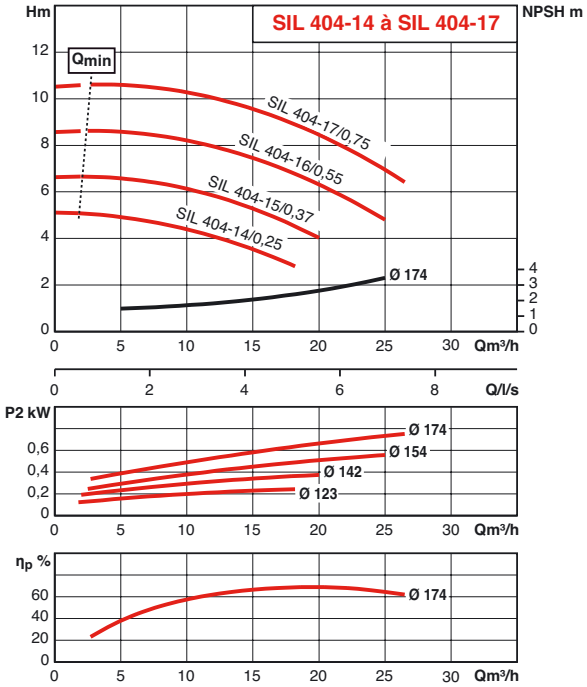

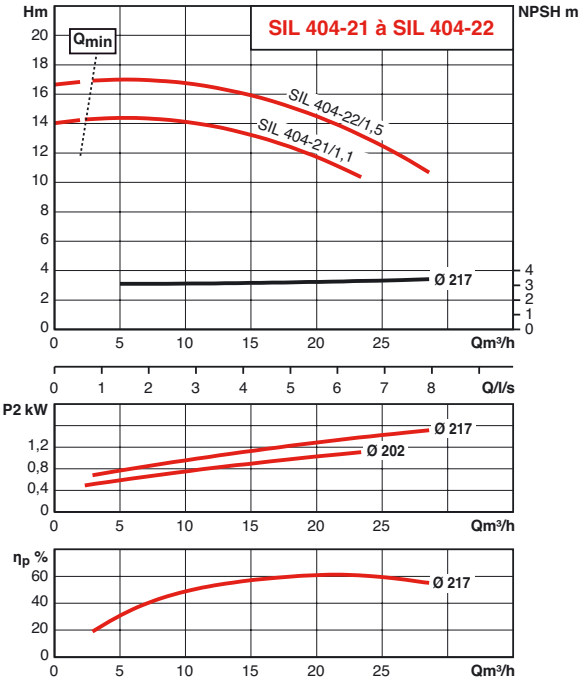

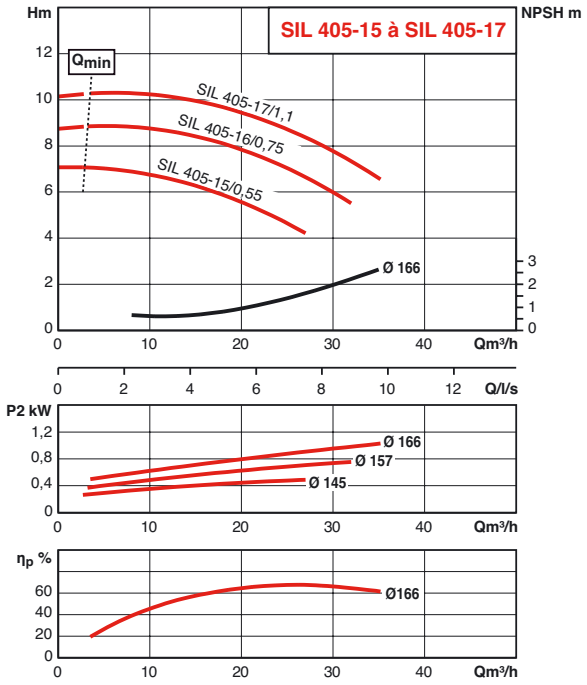

HYDRAULIC PERFORMANCES - SIL 4 POLE

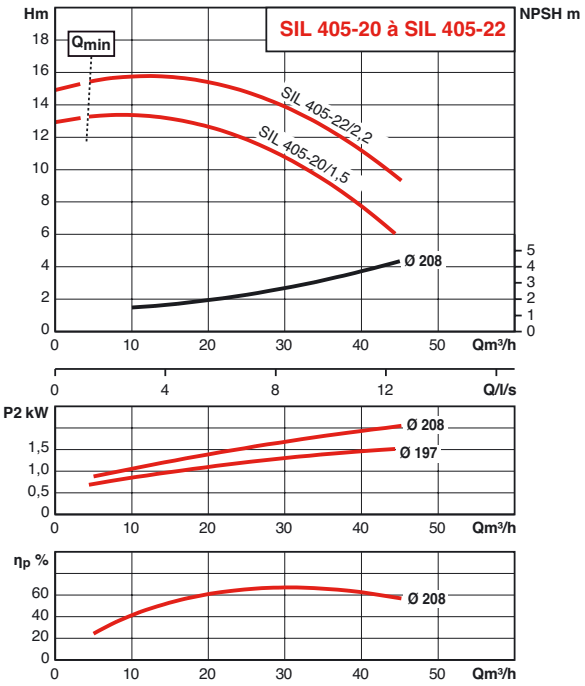

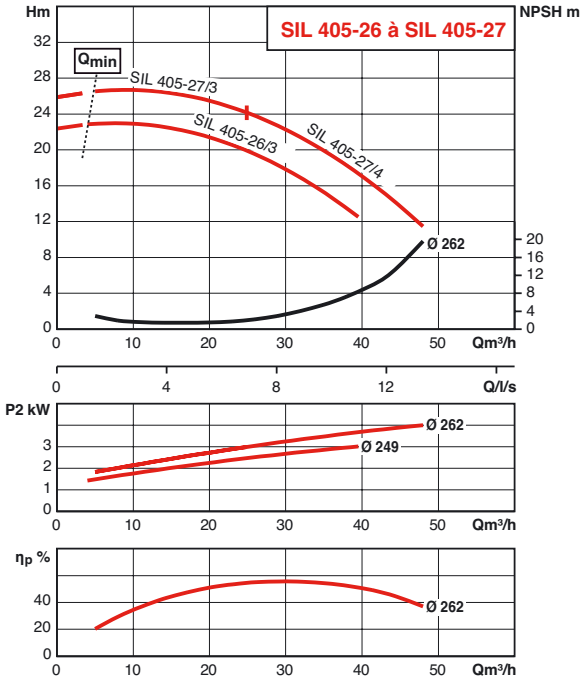

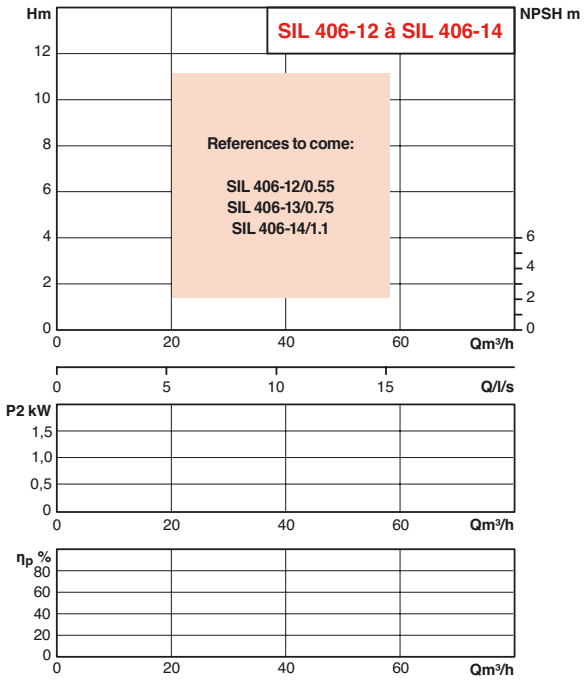

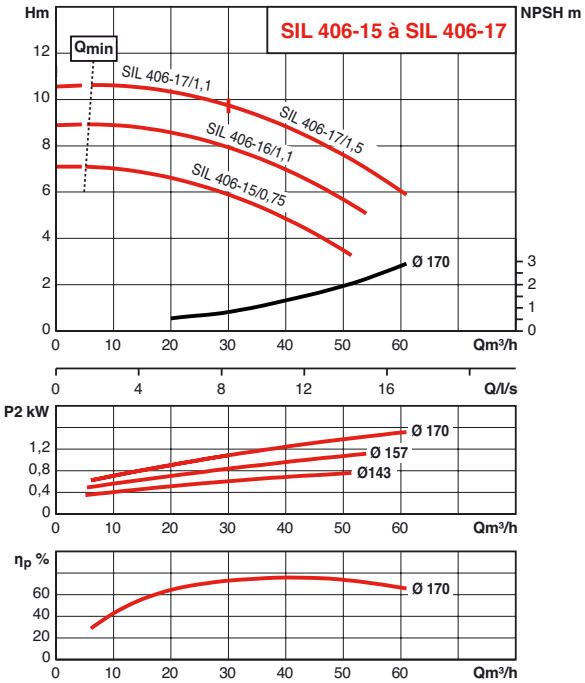

SIL

HYDRAULIC PERFORMANCES - SIL 4 POLE

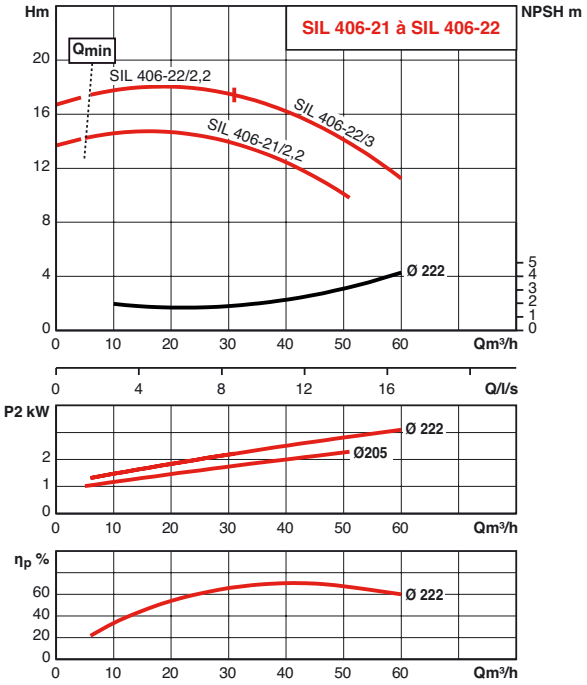

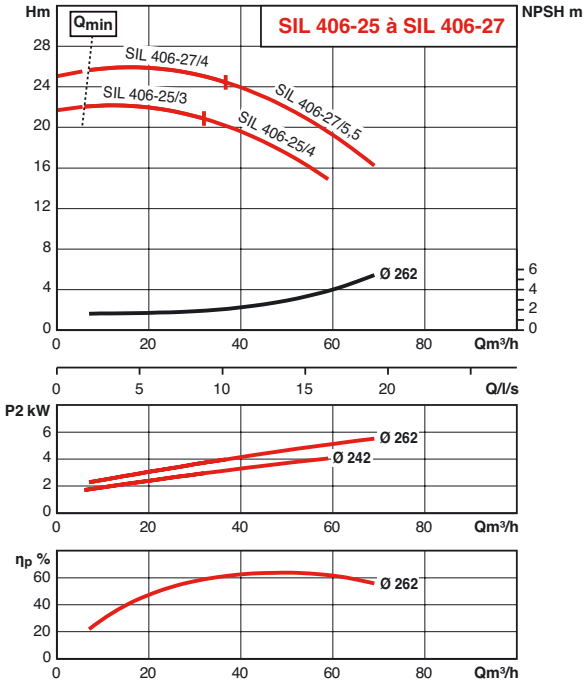

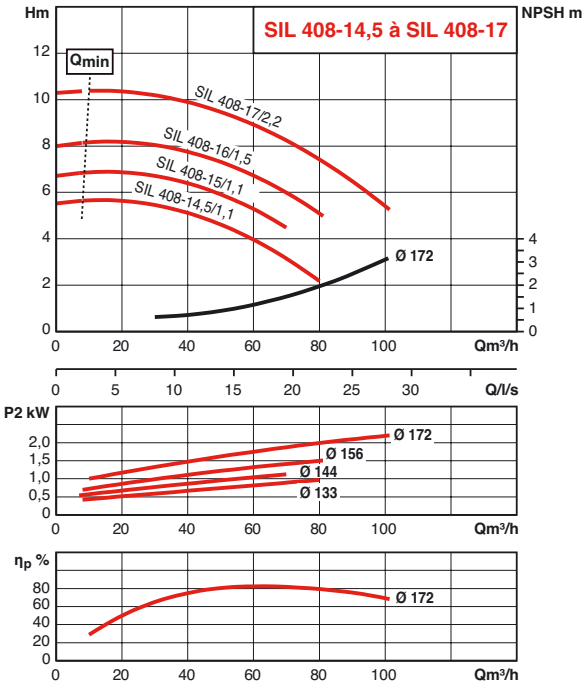

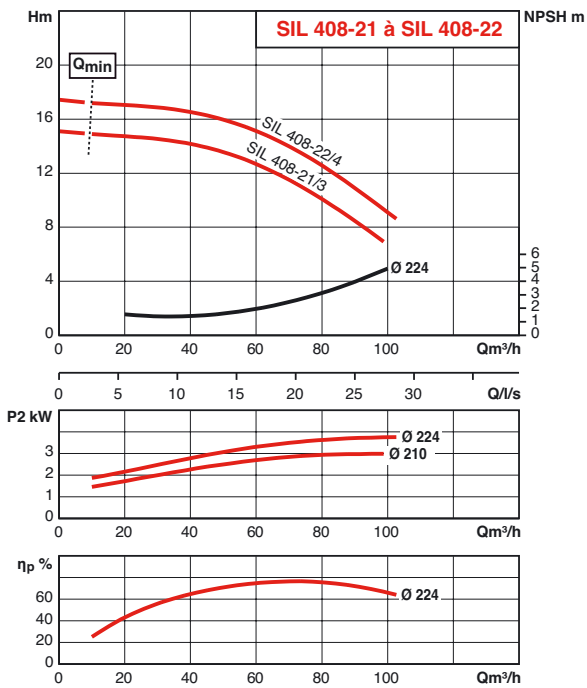

HYDRAULIC PERFORMANCES - SIL 4 POLE

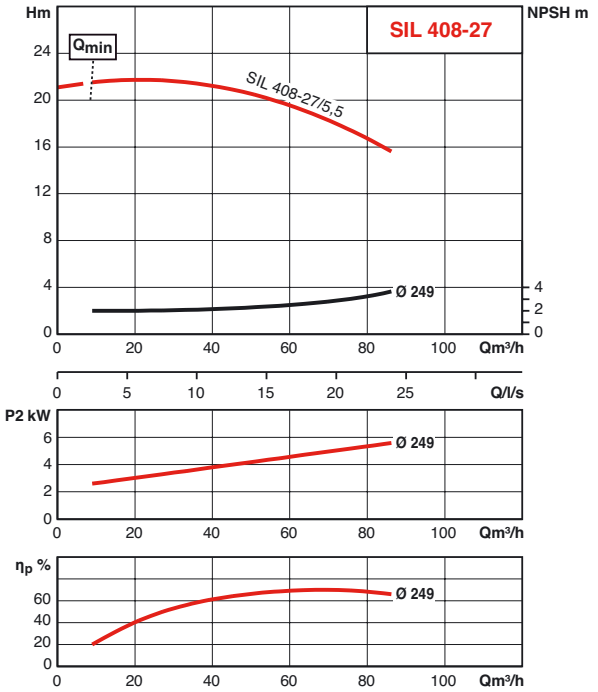

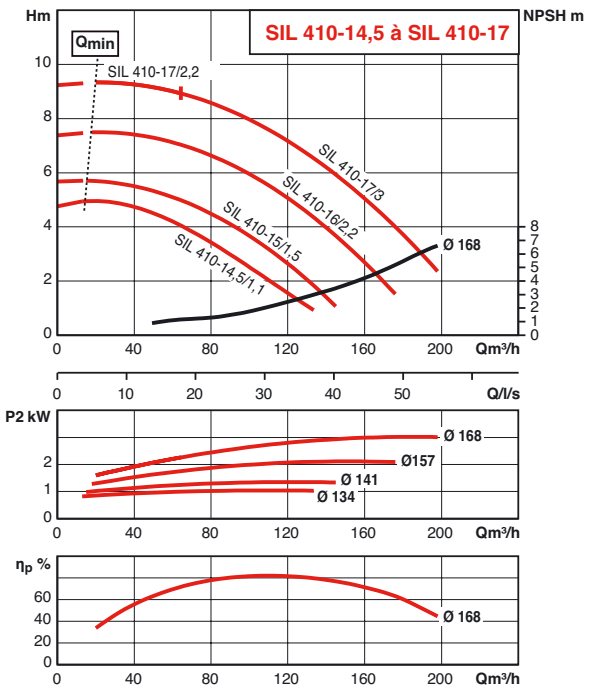

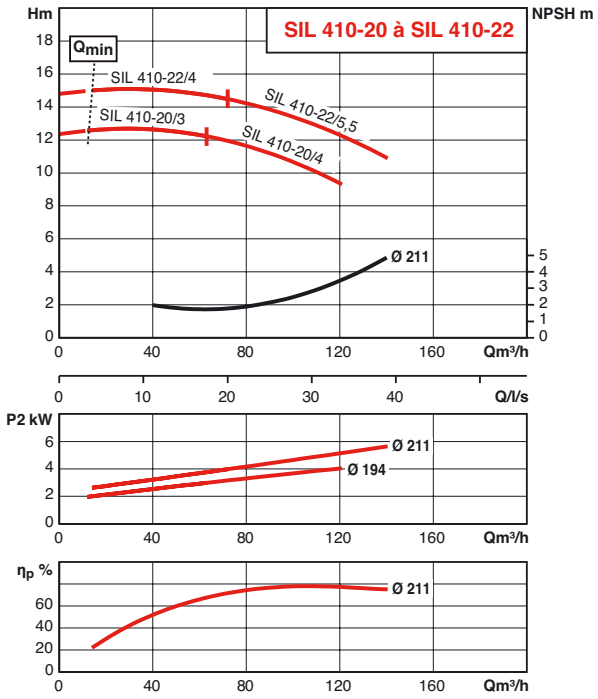

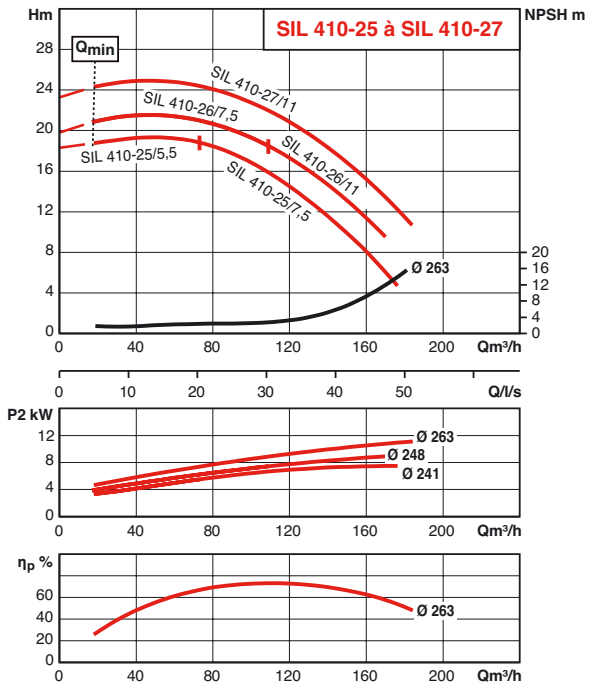

SIL

HYDRAULIC PERFORMANCES - SIL 4 POLE

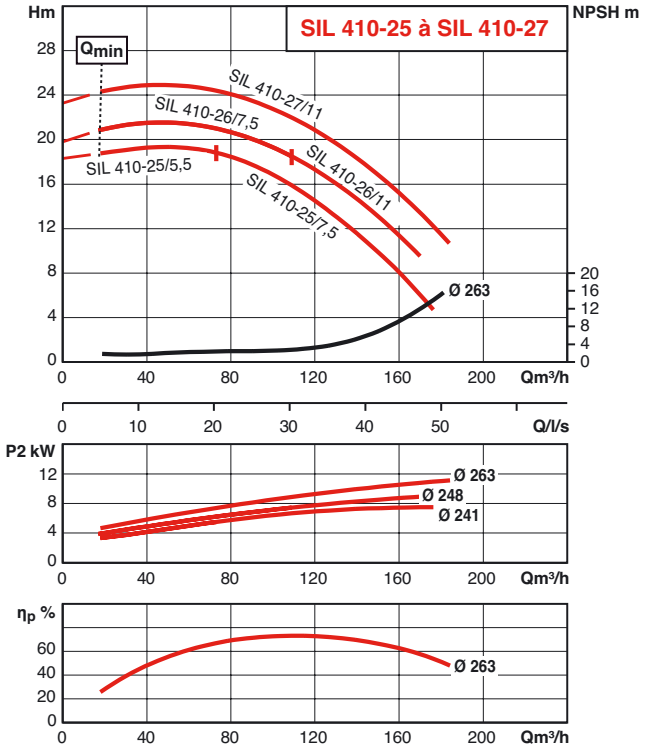

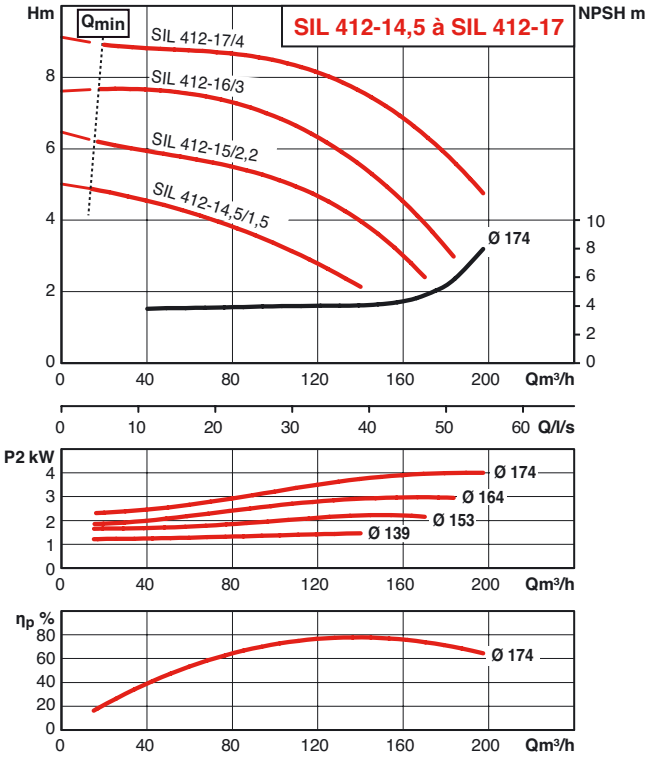

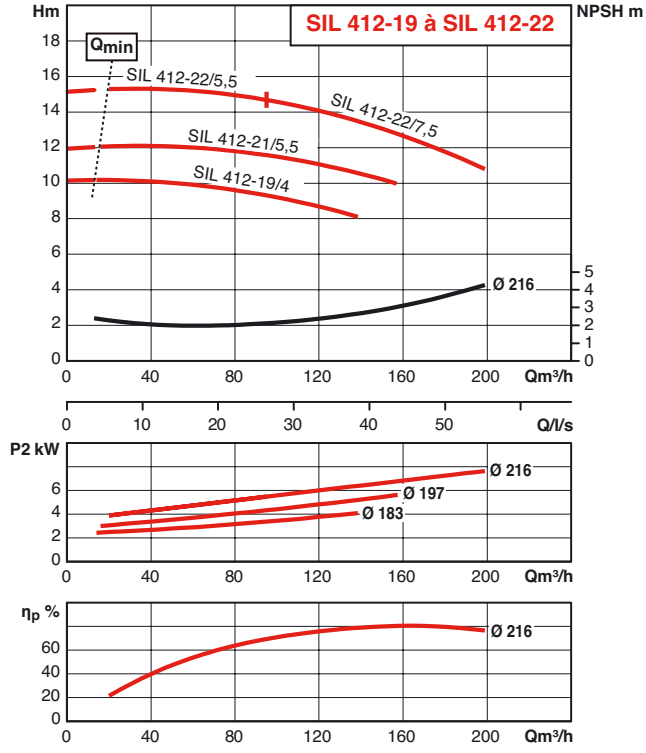

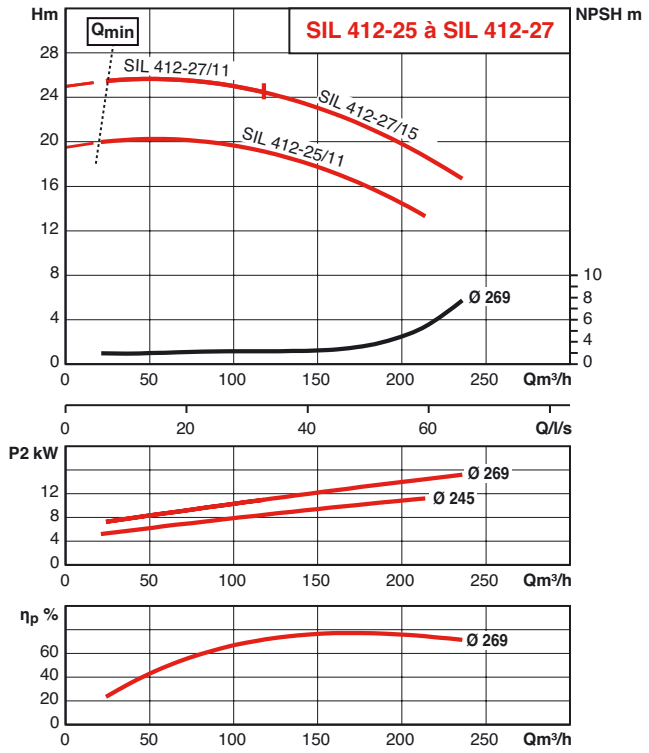

HYDRAULIC PERFORMANCES - SIL 4 POLE AND 6 POLE - 960 REV./MIN

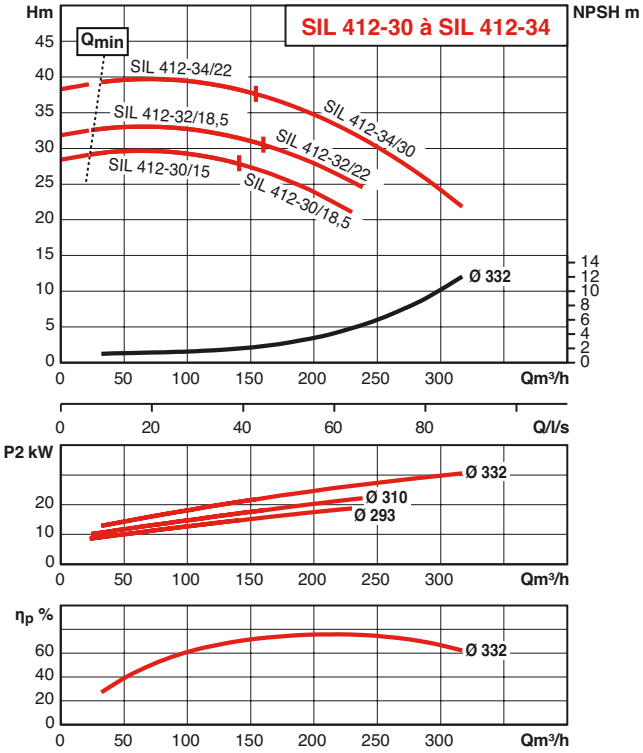

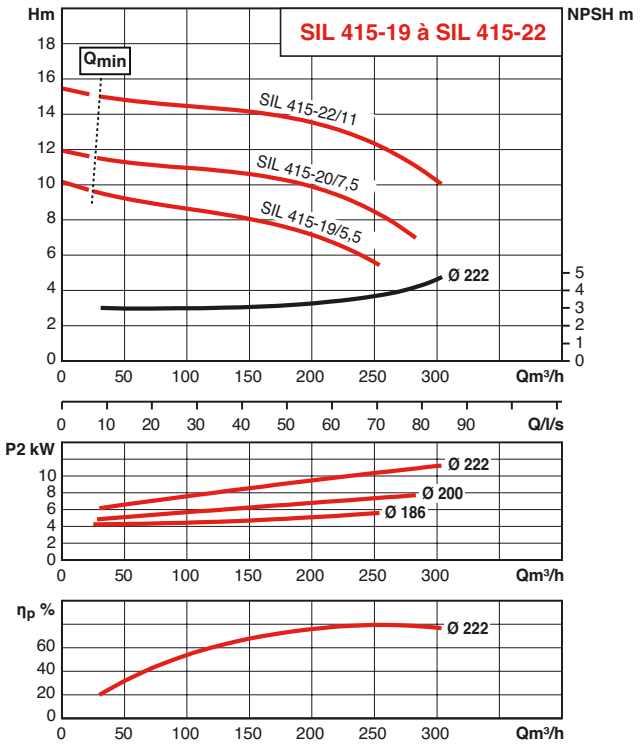

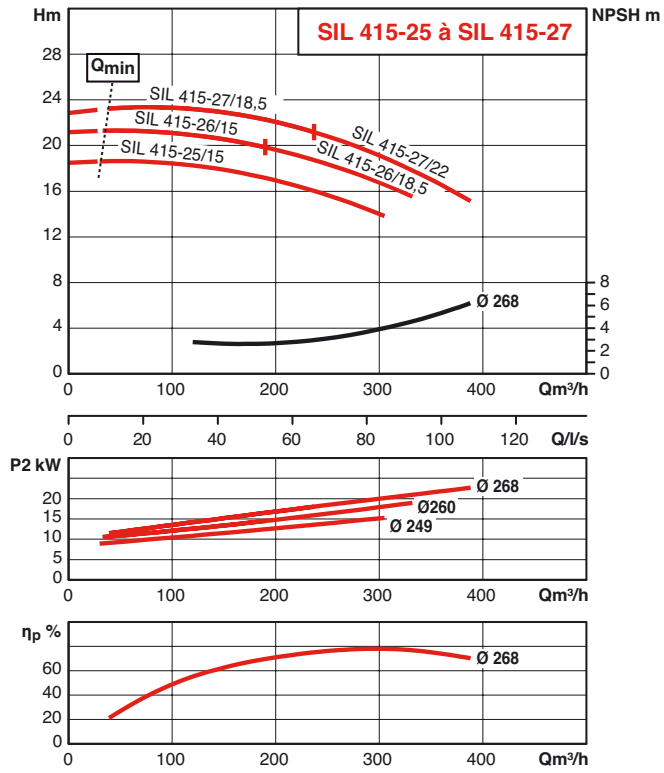

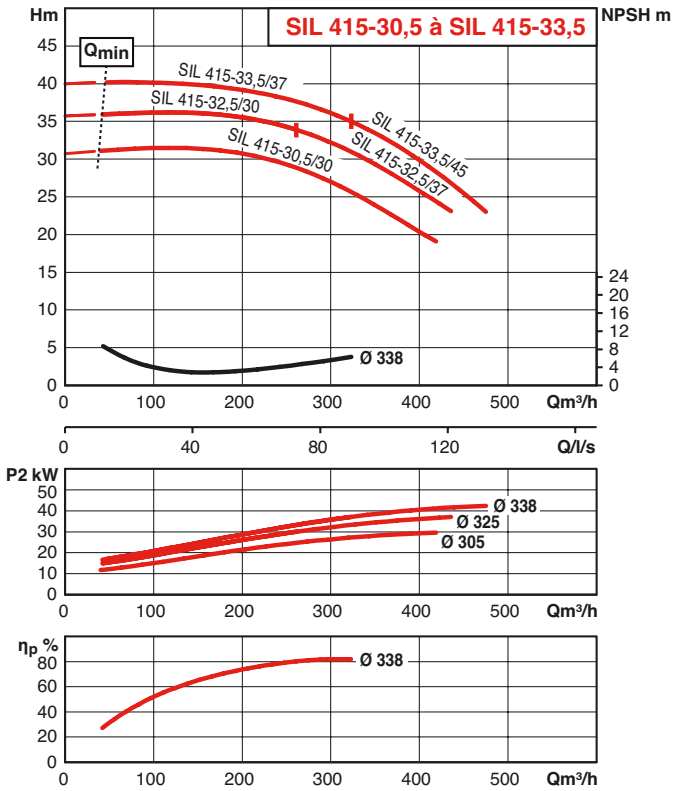

SIL

HYDRAULIC PERFORMANCES - SIL 4 POLE

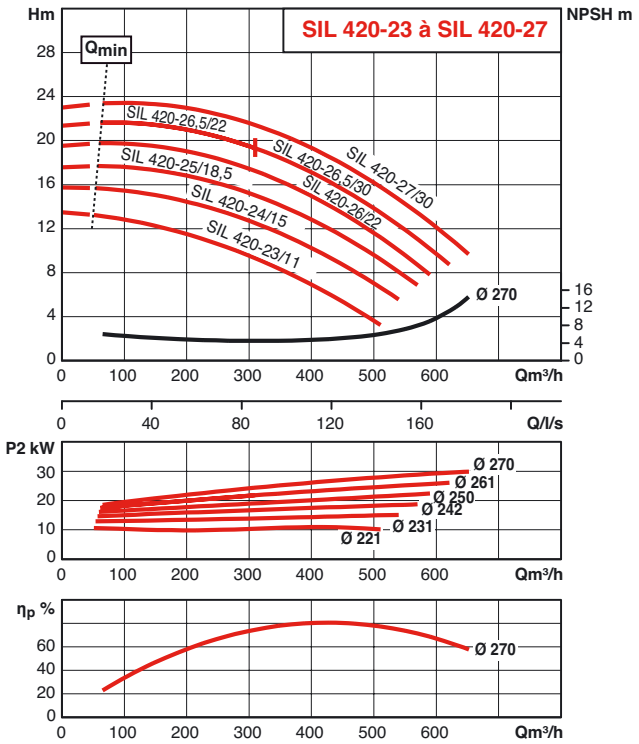

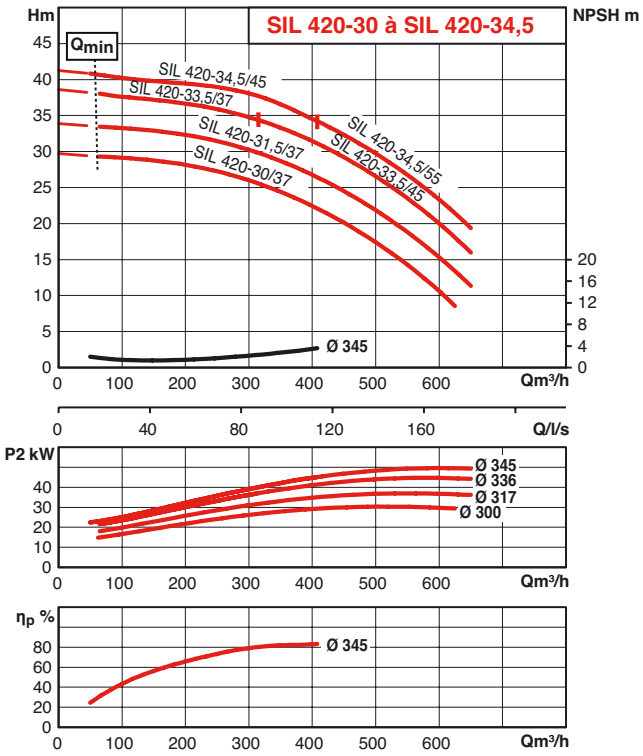

HYDRAULIC PERFORMANCES - SIL 2 POLE

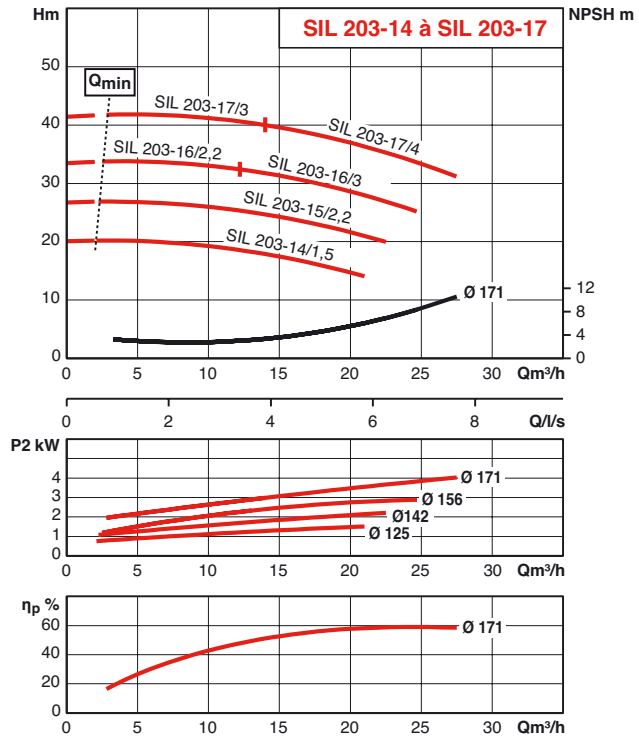

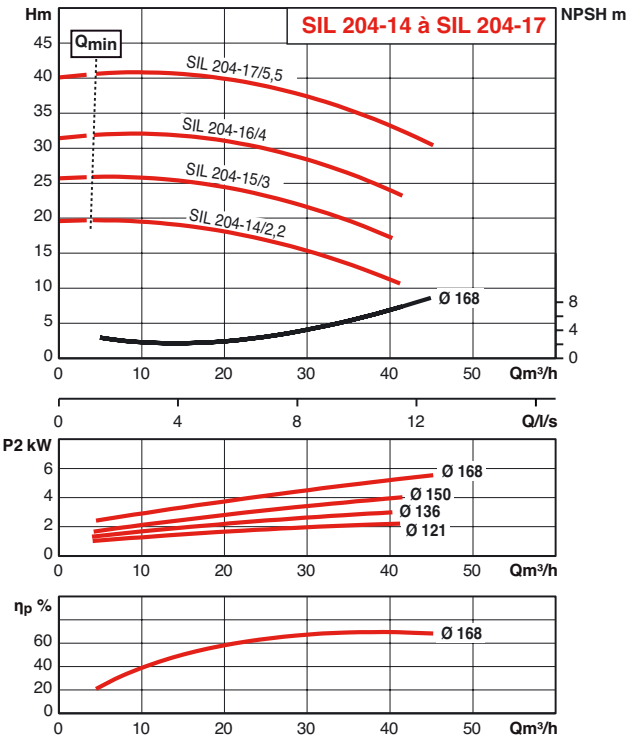

HYDRAULIC PERFORMANCES - SIL 2 POLE

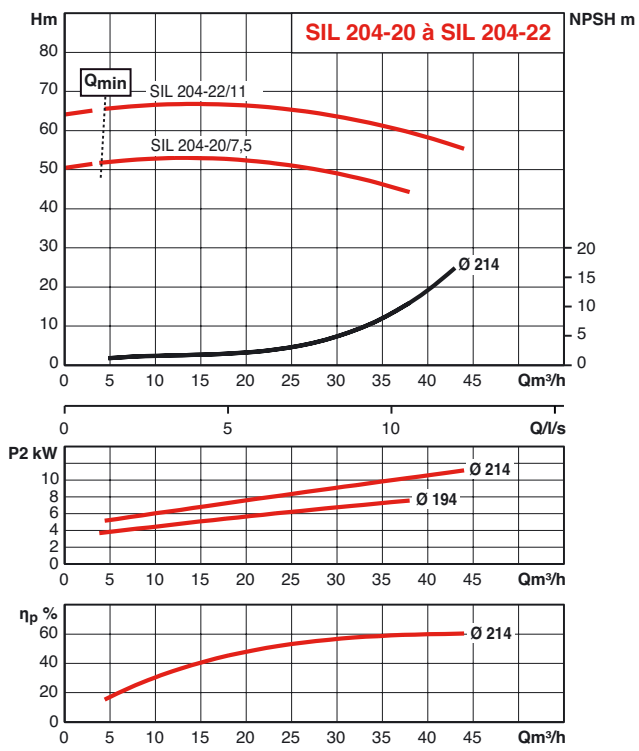

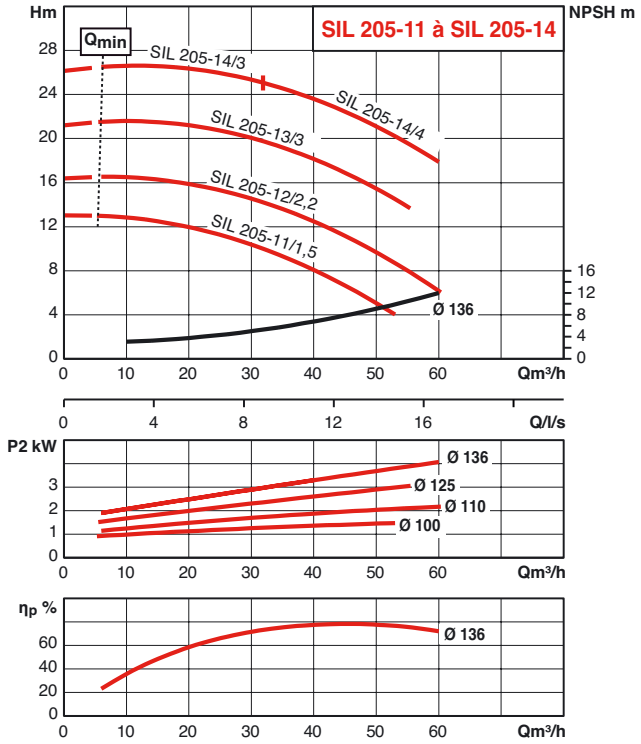

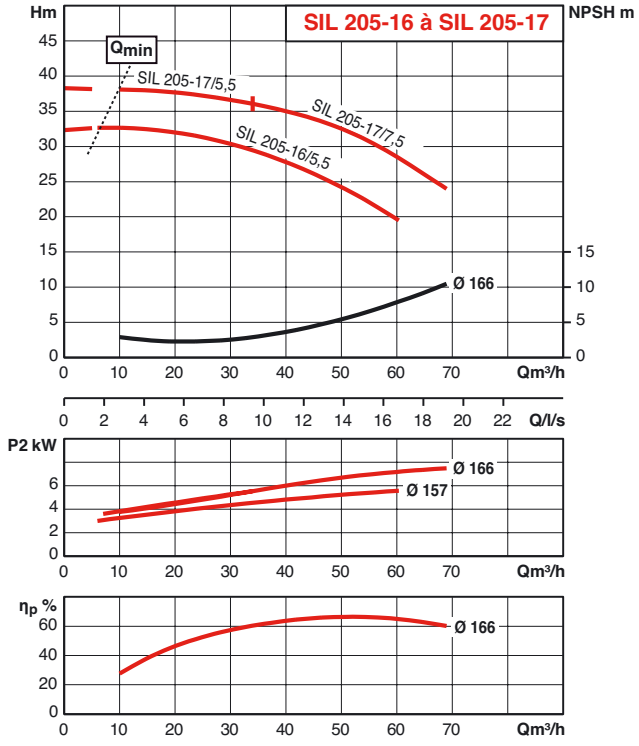

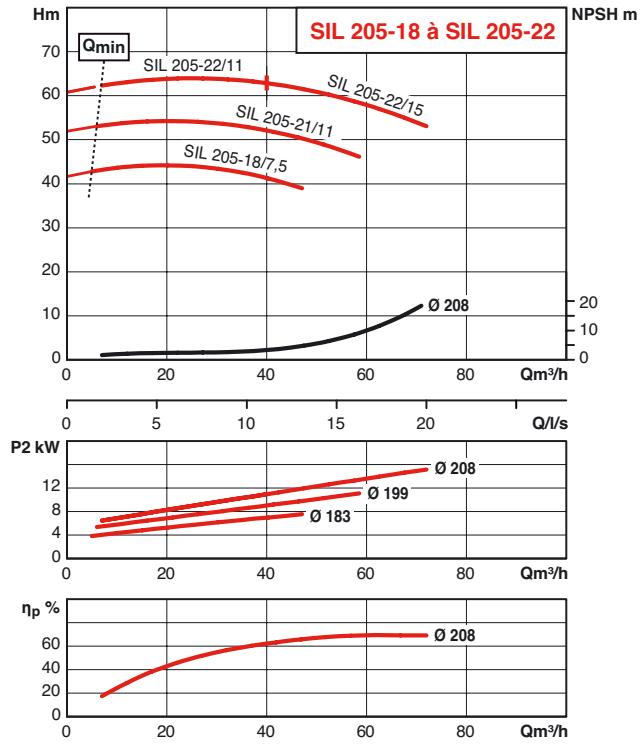

SIL

HYDRAULIC PERFORMANCES - SIL 2 POLE

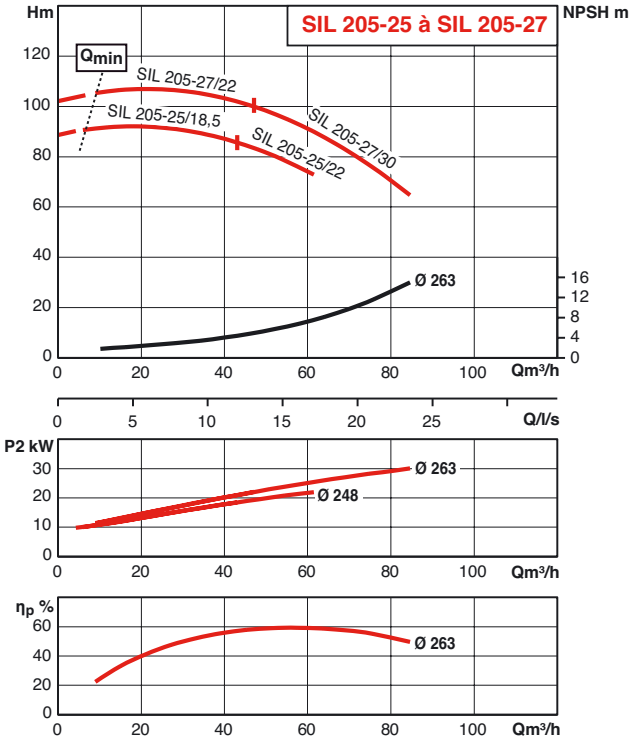

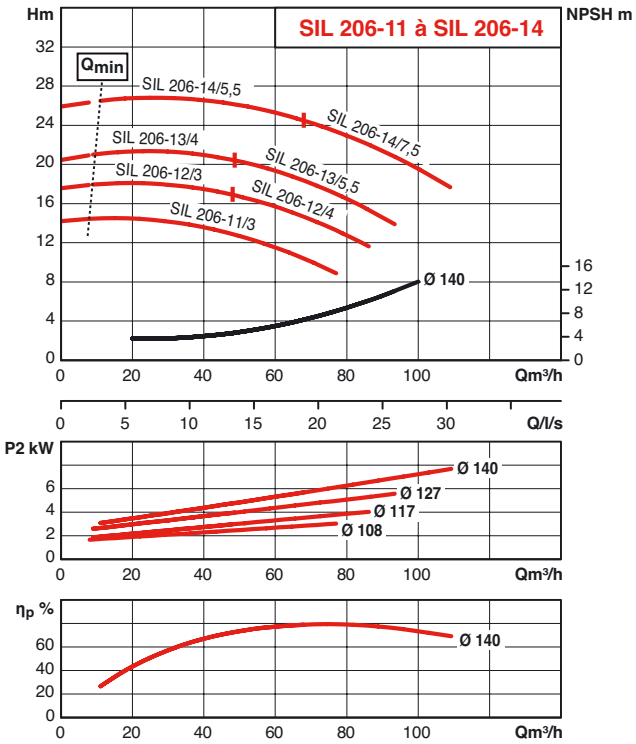

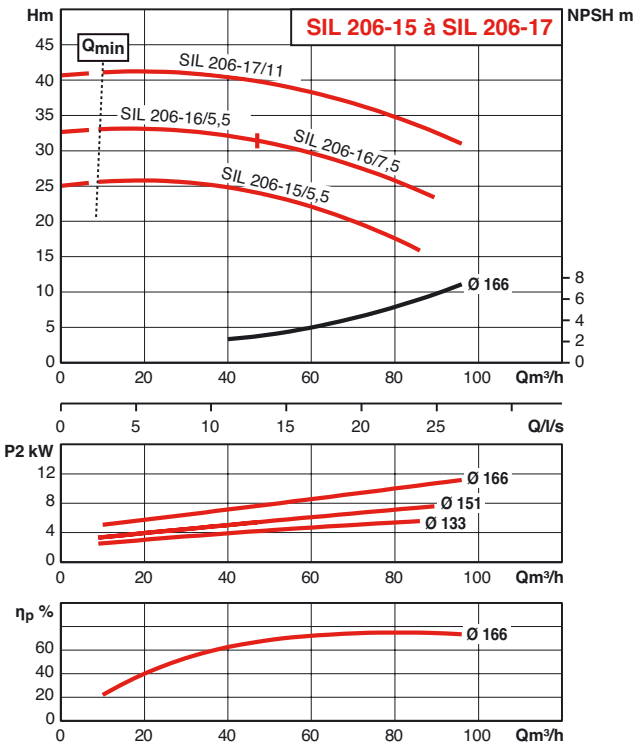

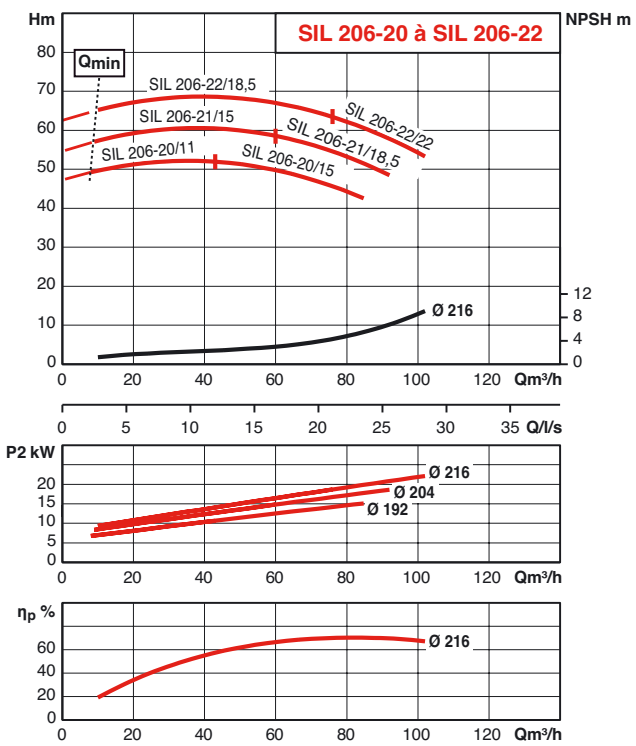

HYDRAULIC PERFORMANCES - SIL 2 POLE

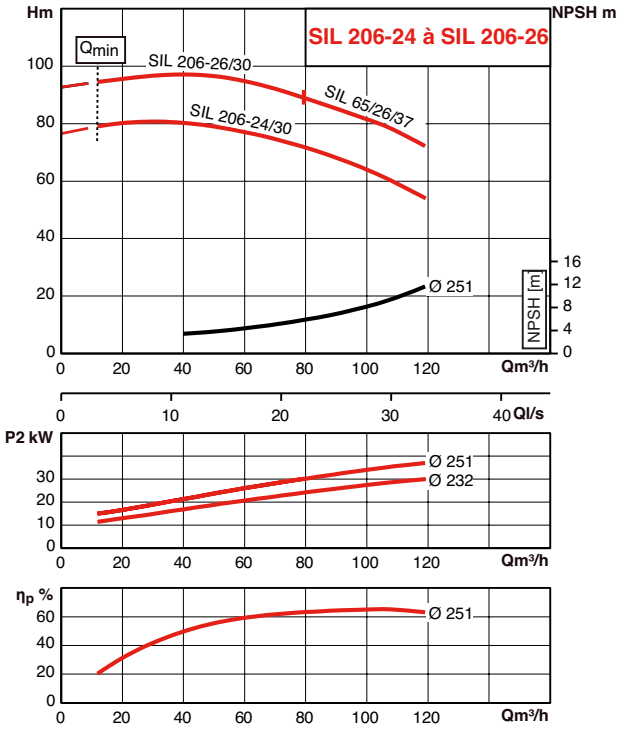

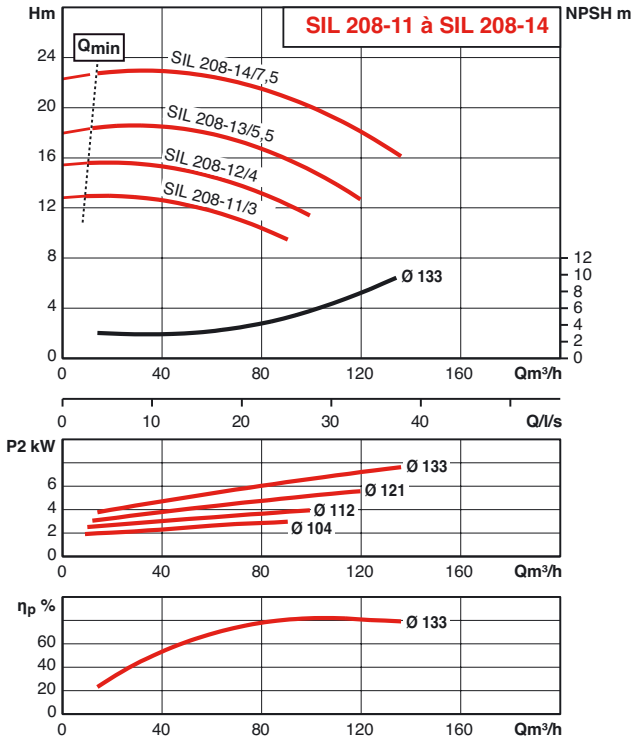

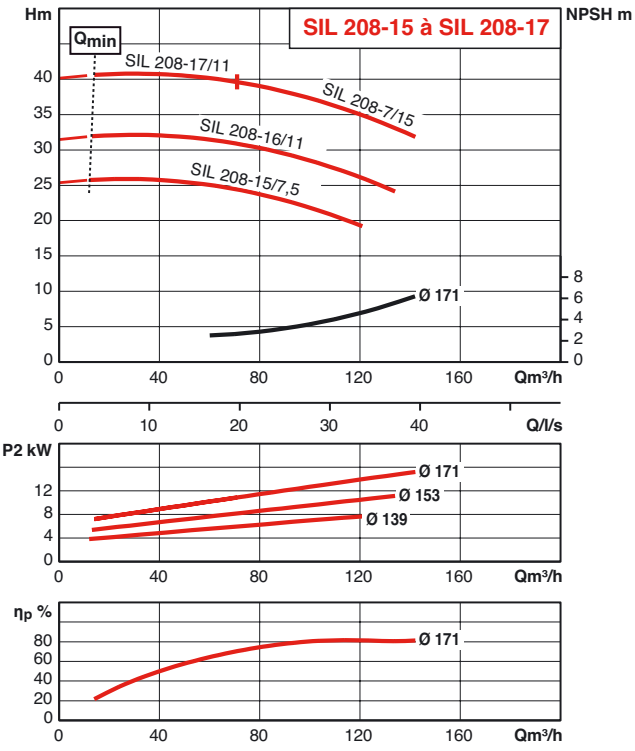

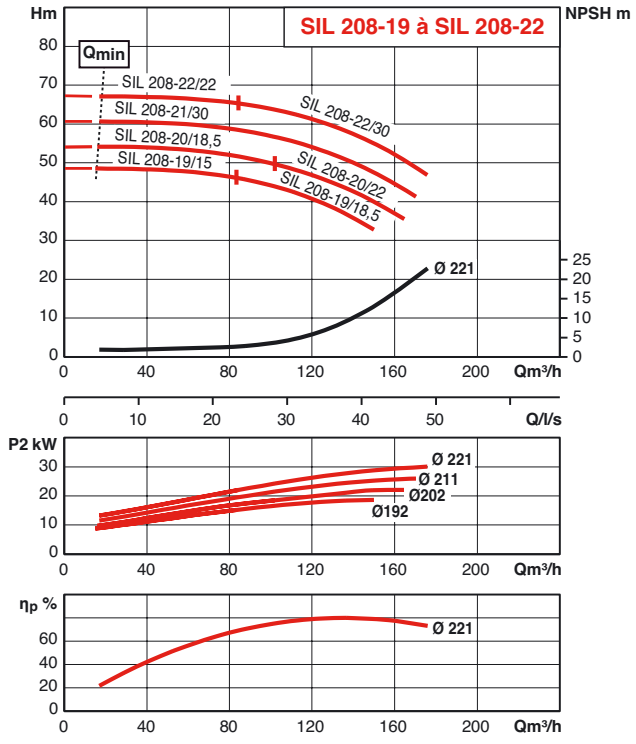

SIL

HYDRAULIC PERFORMANCES - SIL 2 POLE

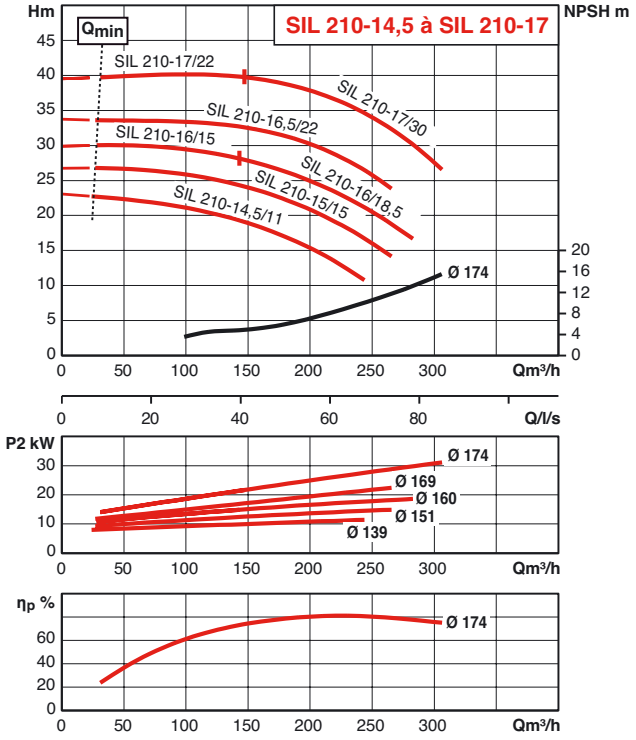

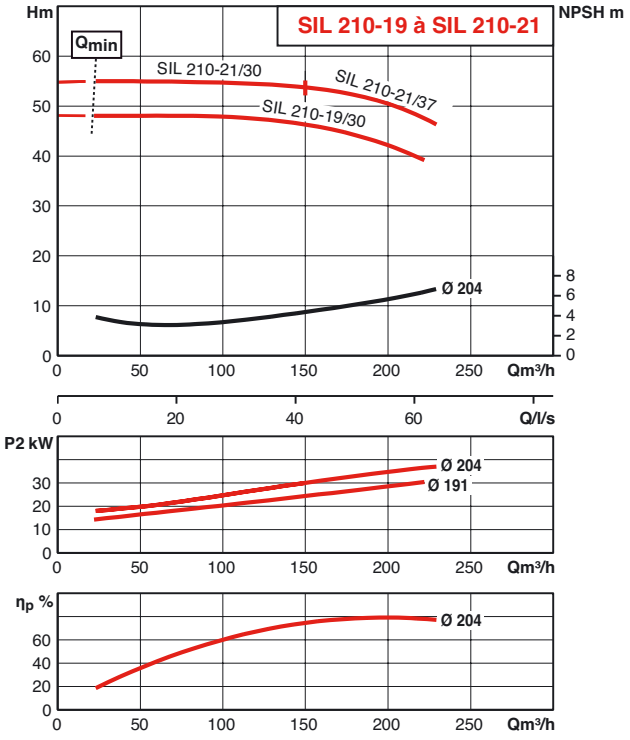

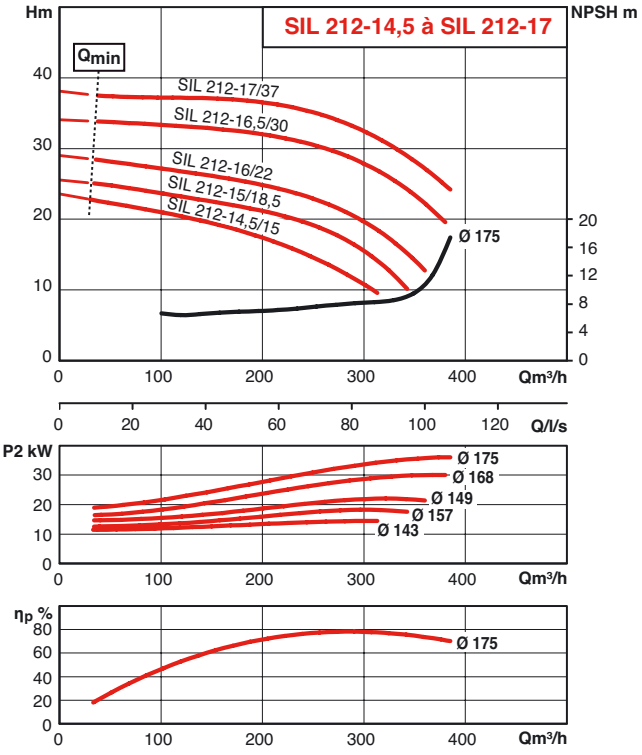

HYDRAULIC PERFORMANCES - SIL 6 POLE

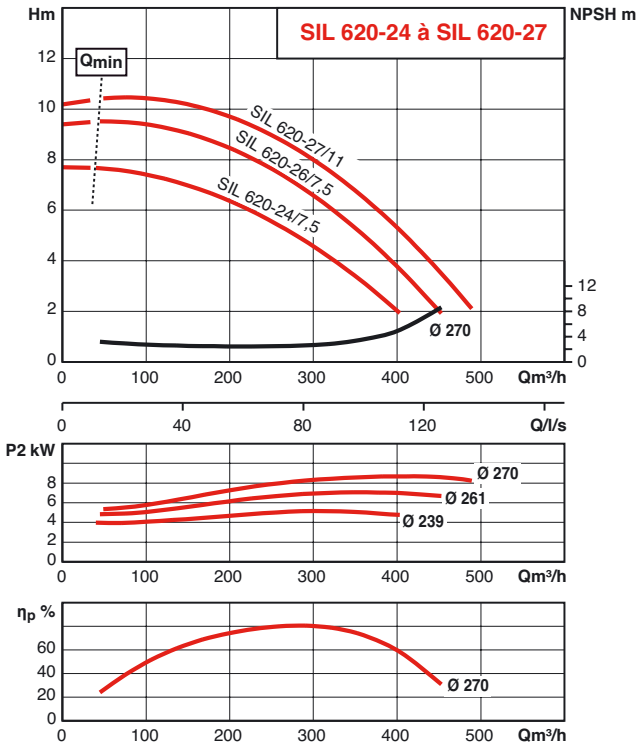

SIL

ELECTRICAL AND DIMENSIONAL FEATURES

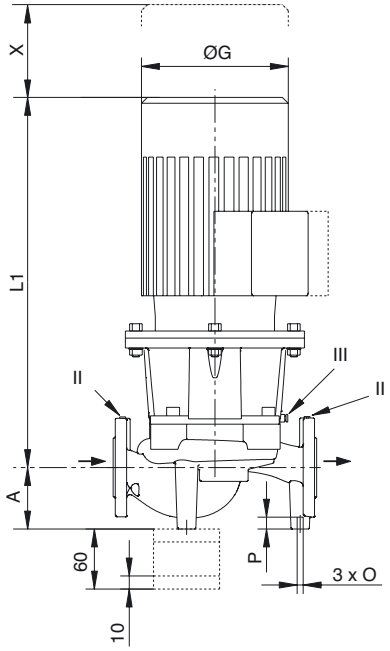

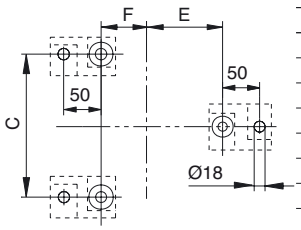

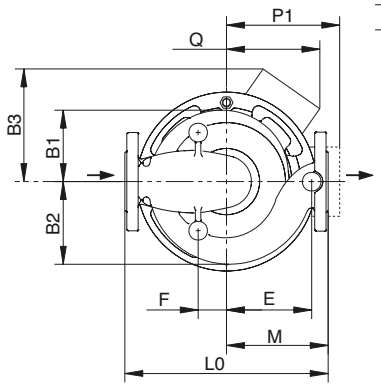

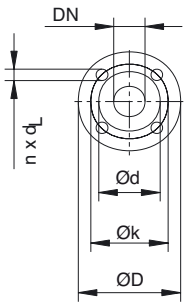

DN	ØD	Øk	Ød	holes
	mm	mm	mm	n x Ø
32	140	100	76	4 x 19
40	150	110	84	4 x 19
50	165	125	99	4 x 19
50	165	125	99	4 x 19
65	185	145	118	4 x 19
80	200	160	132	8 x 19
100	220	180	156	8 x 19
125	250	210	184	8 x 19
150	285	240	211	8 x 23
200	340	295	266	12 x 23

Product reference	MOTOR					PUMP																
	Nominal motor power	Motor performance %	Power factor	Rotation speed	Nominal current (approx.)	DN	A	B1	B2	B3	Q	P1	L0	L1	C	E	F	M	O	P	X	ØG	mass
	P2	η	cos ϕ	rpm	in A																		
	W						mm	mm	mm	mm	mm	mm	mm	mm	mm	mm	mm	mm	mm	mm	mm	mm	kg
SIL203-14/1.5	1500	81.3	0.78	2900	3.3	32	100	112	124	144	144	-	320	449	120	132	68	155	M10	20	90	193	49
SIL203-15/2.2	2200	83.2	0.82	2900	4.4	32	100	112	124	144	144	-	320	476	120	132	68	155	M10	20	90	193	49
SIL203-16/2.2	2200	83.2	0.82	2900	4.4	32	100	112	124	144	144	-	320	476	120	132	68	155	M10	20	90	193	49
SIL203-16/3	3000	84.6	0.84	2900	5.8	32	100	112	124	150	150	-	320	531	120	132	68	155	M10	20	90	217	60
SIL203-17/3	3000	84.6	0.84	2900	5.8	32	100	112	124	150	150	-	320	531	120	132	68	155	M10	20	90	217	59
SIL203-17/4	4000	85.8	0.84	2900	7.7	32	100	112	124	156	156	-	320	555	120	132	68	155	M10	20	90	232	83
SIL204-14/2.2	2200	83.2	0.82	2900	4.4	40	82	113	129	144	144	-	340	490	130	149	58	170	M10	20	95	193	50
SIL204-15/3	3000	84.6	0.84	2900	5.8	40	82	113	129	150	150	-	340	545	130	149	58	170	M10	20	95	217	60
SIL204-16/4	4000	85.8	0.84	2900	7.7	40	82	113	129	156	156	-	340	569	130	149	58	170	M10	20	95	232	70
SIL204-17/5.5	5500	87	0.87	2900	10.2	40	82	113	129	176	176	-	340	614	130	149	58	170	M10	20	95	279	84
SIL204-20/7.5	7500	88.1	0.86	2900	13.7	40	110	145	149	-	-	188	440	625	180	172	78	190	M10	20	100	279	105
SIL204-22/11	11000	89.4	0.87	2900	22	40	110	145	149	-	-	250	440	772	180	172	78	190	M10	20	100	320	138
SIL205-11/1.5	1500	81.3	0.78	2900	3.3	50	105	102	119	144	144	-	340	449	140	130	40	150	M10	20	100	193	48
SIL205-12/2.2	2200	83.2	0.82	2900	4.4	50	105	102	119	144	144	-	340	476	140	130	40	150	M10	20	100	193	48
SIL205-13/3	3000	84.6	0.84	2900	5.8	50	105	102	119	150	150	-	340	535	140	130	40	150	M10	20	100	217	58
SIL205-14/3	3000	84.6	0.84	2900	5.8	50	105	102	119	150	150	-	340	535	140	130	40	150	M10	20	100	217	58
SIL205-14/4	4000	85.8	0.84	2900	7.7	50	105	102	119	156	156	-	340	559	140	130	40	150	M10	20	100	232	68
SIL205-16/5.5	5500	87	0.87	2900	10.2	50	103	120	138	176	176	-	340	621	164	143	48	170	M10	20	100	279	89
SIL205-17/5.5	5500	87	0.87	2900	10.2	50	103	120	138	176	176	-	340	621	164	143	48	170	M10	20	100	279	89
SIL205-17/7.5	7500	88.1	0.86	2900	13.7	50	103	120	138	176	176	-	340	627	164	143	48	170	M10	20	100	279	96
SIL205-18/7.5	7500	88.1	0.86	2900	13.7	50	120	145	150	-	-	188	440	626	160	170	70	190	M10	20	100	279	109
SIL205-21/11	11000	89.4	0.87	2900	22	50	120	145	150	-	-	250	440	773	160	170	70	190	M10	20	100	320	141

ELECTRICAL AND DIMENSIONAL FEATURES

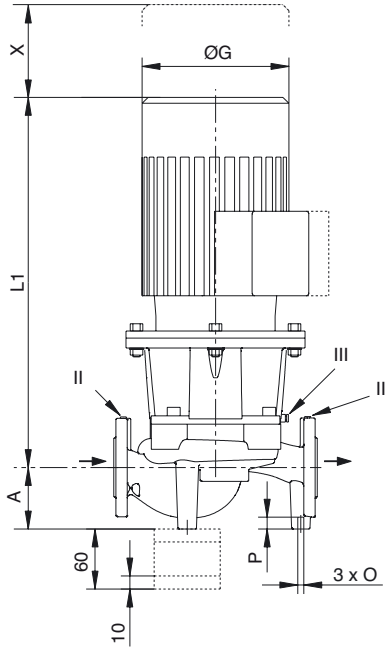

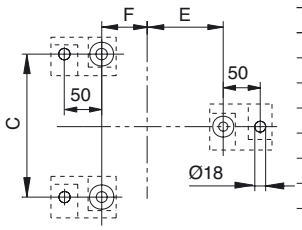

DN	ØD	Øk	Ød	holes
	mm	mm	mm	n x Ø
32	140	100	76	4 x 19
40	150	110	84	4 x 19
50	165	125	99	4 x 19
50	165	125	99	4 x 19
65	185	145	118	4 x 19
80	200	160	132	8 x 19
100	220	180	156	8 x 19
125	250	210	184	8 x 19
150	285	240	211	8 x 23
200	340	295	266	12 x 23

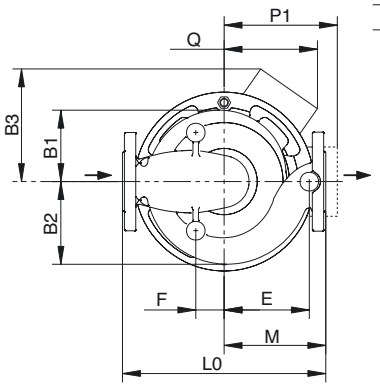

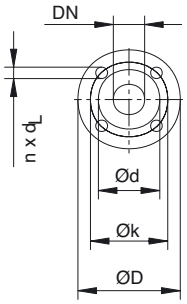

Product reference	MOTOR					DN	PUMP															
	Nominal motor power	Motor performance %	Power factor	Rotation speed	Nominal current (approx.)		A	B1	B2	B3	Q	P1	L0	L1	C	E	F	M	O	P	X	ØG	mass
	P2	η	cos ϕ	rpm	in A																		
	W						mm	mm	mm	mm	mm	mm	mm	mm	mm	mm	mm	mm	mm	mm	mm	mm	kg
SIL205-22/11	11000	89.4	0.87	2900	22	50	120	145	150	-	-	250	440	773	160	170	70	190	M10	20	100	320	141
SIL205-22/15	15000	90.3	0.84	2900	28.5	50	120	145	150	-	-	250	440	773	160	170	70	190	M10	20	100	320	149
SIL205-25/18.5	18500	90.9	0.87	2900	34.2	50	122	174	178	-	-	250	440	782	200	200	70	220	M10	20	120	320	175
SIL205-25/22	22000	91.3	0.85	2900	40.7	50	122	174	178	-	-	291	440	866	200	200	70	220	M10	20	120	370	214
SIL205-27/22	22000	91.3	0.85	2900	40.7	50	122	174	178	-	-	291	440	866	200	200	70	220	M10	20	120	370	204
SIL205-27/30	30000	92	0.85	2900	53	50	122	174	178	-	-	305	440	940	200	200	70	220	M10	20	120	415	266
SIL206-11/3	3000	84.6	0.84	2900	5.8	65	120	112	134	150	150	-	340	549	140	140	60	160	M12	20	110	217	62
SIL206-12/3	3000	84.6	0.84	2900	5.8	65	120	112	134	150	150	-	340	549	140	140	60	160	M12	20	110	217	62
SIL206-12/4	4000	85.8	0.84	2900	7.7	65	120	112	134	156	156	-	340	573	140	140	60	160	M12	20	110	232	71
SIL206-13/4	4000	85.8	0.84	2900	7.7	65	120	112	134	156	156	-	340	573	140	140	60	160	M12	20	110	232	71
SIL206-13/5.5	5500	87	0.87	2900	10.2	65	120	112	134	-	-	188	340	624	140	140	60	160	M12	20	110	279	86
SIL206-14/5.5	5500	87	0.87	2900	10.2	65	120	112	134	-	-	188	340	624	140	140	60	160	M12	20	110	279	86
SIL206-14/7.5	7500	88.1	0.86	2900	13.7	65	120	112	134	-	-	188	340	630	140	140	60	160	M12	20	110	279	93
SIL206-15/5.5	5500	87	0.87	2900	10.2	65	110	126	146	176	176	-	430	627	180	195	60	215	M12	20	120	279	96,5
SIL206-16/5.5	5500	87	0.87	2900	10.2	65	110	126	146	176	176	-	430	627	180	195	60	215	M12	20	120	279	94
SIL206-16/7.5	7500	88.1	0.86	2900	13.7	65	110	126	146	176	176	-	430	633	180	195	60	215	M12	20	120	279	105
SIL206-17/11	11000	89.4	0.87	2900	22	65	110	126	146	-	-	250	430	788	180	195	60	215	M12	20	120	320	128
SIL206-20/11	11000	89.4	0.87	2900	22	65	130	150	168	-	-	250	475	782	200	225	50	245	M12	20	110	320	148
SIL206-20/15	15000	90.3	0.84	2900	28.5	65	130	150	168	-	-	250	475	782	200	225	50	245	M12	20	110	320	155
SIL206-21/15	15000	90.3	0.84	2900	28.5	65	130	150	168	-	-	250	475	782	200	225	50	245	M12	20	110	320	155
SIL206-21/18.5	18500	90.9	0.87	2900	34.2	65	130	150	168	-	-	250	475	783	200	225	50	245	M12	20	110	320	173
SIL206-22/18.5	18500	90.9	0.87	2900	34.2	65	130	150	168	-	-	250	475	783	200	225	50	245	M12	20	110	320	172

SIL

ELECTRICAL AND DIMENSIONAL FEATURES

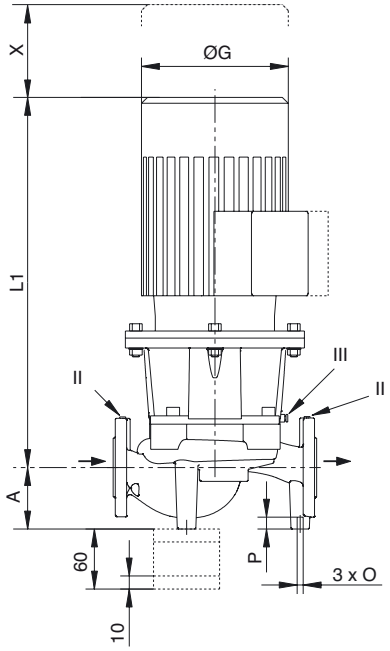

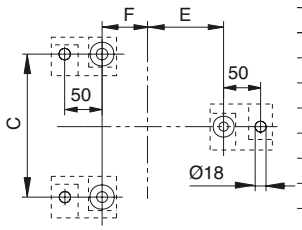

DN	ØD	Øk	Ød	holes
	mm	mm	mm	n x Ø
32	140	100	76	4 x 19
40	150	110	84	4 x 19
50	165	125	99	4 x 19
50	165	125	99	4 x 19
65	185	145	118	4 x 19
80	200	160	132	8 x 19
100	220	180	156	8 x 19
125	250	210	184	8 x 19
150	285	240	211	8 x 23
200	340	295	266	12 x 23

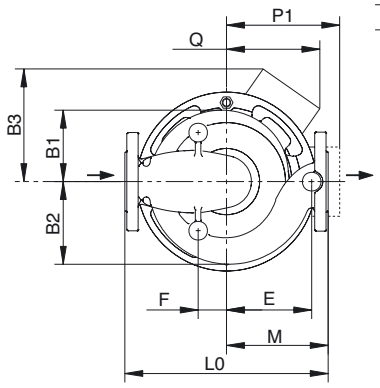

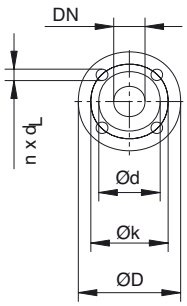

Product reference	MOTOR					DN	PUMP															
	Nominal motor power	Motor performance %	Power factor	Rotation speed	Nominal current (approx.)		A	B1	B2	B3	Q	P1	L0	L1	C	E	F	M	O	P	X	ØG	mass
	P2	η	cos ϕ	rpm	in A																		
	W						mm	mm	mm	mm	mm	mm	mm	mm	mm	mm	mm	mm	mm	mm	mm	mm	kg
SIL206-22/22	22000	91.3	0.85	2900	40.7	65	130	150	168	-	-	291	475	867	200	225	50	245	M12	20	110	370	202
SIL 206-24/30	30000	0.92	0.85	2900	53	65	140	174	187	-	-	305	475	944	200	215	80	235	M12	20	120	415	270
SIL 206-26/30	30000	0.92	0.85	2900	53	65	140	174	187	-	-	305	475	944	200	215	80	235	M12	20	120	415	270
SIL 206-26/37	37000	0.925	0.89	2900	65	65	140	174	187	-	-	305	475	944	200	215	80	235	M12	20	120	415	302
SIL208-11/3	3000	84.6	0.84	2900	5.8	80	105	123	151	150	150	-	400	566	180	173	57	200	M12	20	120	217	69
SIL208-12/4	30000	92	0.85	2900	53	65	140	174	187	-	-	305	475	944	200	215	80	235	M12	20	120	415	270
SIL208-12/4	4000	85.8	0.84	2900	7.7	80	105	123	151	156	156	-	400	590	180	173	57	200	M12	20	120	232	79
SIL208-13/5.5	30000	92	0.85	2900	53	65	140	174	187	-	-	305	475	944	200	215	80	235	M12	20	120	415	270
SIL208-13/5.5	5500	87	0.87	2900	10.2	80	105	123	151	-	-	188	400	641	180	173	57	200	M12	20	120	279	94
SIL208-14/7.5	37000	92.5	0.89	2900	65	65	140	174	187	-	-	305	475	944	200	215	80	235	M12	20	120	415	302
SIL208-14/7.5	7500	88.1	0.86	2900	13.7	80	105	123	151	-	-	188	400	647	180	173	57	200	M12	20	120	279	101
SIL208-15/7.5	7500	88.1	0.86	2900	13.7	80	120	136	162	176	176	-	440	631	180	173	72	200	M12	20	120	279	109
SIL208-16/11	11000	89.4	0.87	2900	22	80	120	136	162	-	-	250	440	786	180	173	72	200	M12	20	120	320	135
SIL208-17/11	11000	89.4	0.87	2900	22	80	120	136	162	-	-	250	440	786	180	173	72	200	M12	20	120	320	135
SIL208-17/15	15000	90.3	0.84	2900	28.5	80	120	136	162	-	-	250	440	786	180	173	72	200	M12	20	120	320	142
SIL208-19/15	15000	90.3	0.84	2900	28.5	80	145	157	182	-	-	250	500	790	220	208	62	230	M12	20	120	320	161
SIL208-19/18.5	18500	90.9	0.87	2900	34.2	80	145	157	182	-	-	250	500	791	220	208	62	230	M12	20	120	320	178
SIL208-20/18.5	18500	90.9	0.87	2900	34.2	80	145	157	182	-	-	250	500	791	220	208	62	230	M12	20	120	320	178
SIL208-20/22	22000	91.3	0.85	2900	40.7	80	145	157	182	-	-	291	500	875	220	208	62	230	M12	20	120	370	210
SIL208-21/30	30000	92	0.85	2900	53	80	145	157	182	-	-	305	500	932	220	208	62	230	M12	20	120	415	263
SIL208-22/22	22000	91.3	0.85	2900	40.7	80	145	157	182	-	-	291	500	875	220	208	62	230	M12	20	120	370	211
SIL208-22/30	30000	92	0.85	2900	53	80	145	157	182	-	-	305	500	932	220	208	62	230	M12	20	120	415	263
SIL210-14.5/11	11000	89.4	0.87	2900	22	100	120	159	197	-	-	250	500	821	200	226	60	250	M12	20	135	320	148

ELECTRICAL AND DIMENSIONAL FEATURES

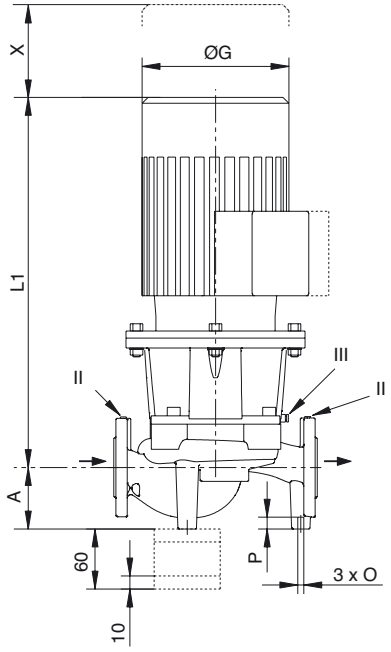

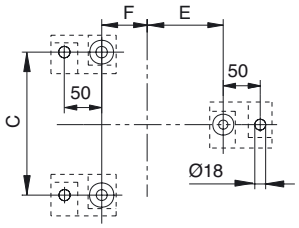

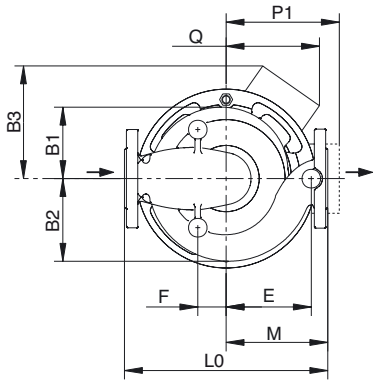

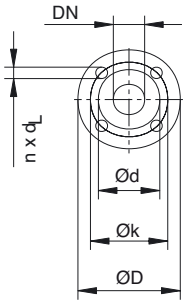

Product reference	MOTOR					PUMP																
	Nominal motor power	Motor performance %	Power factor	Rotation speed	Nominal current (approx.)	DN	A	B1	B2	B3	Q	P1	L0	L1	C	E	F	M	O	P	X	ØG	mass
	P2	η	cos ϕ	rpm	in A																		
	W						mm	mm	mm	mm	mm	mm	mm	mm	mm	mm	mm	mm	mm	mm	mm	mm	kg
SIL210-15/15	15000	90.3	0.84	2900	28.5	100	120	159	197	-	-	250	500	821	200	226	60	250	M12	20	135	320	155
SIL210-16.5/22	22000	91.3	0.85	2900	40.7	100	120	159	197	-	-	291	500	906	200	226	60	250	M12	20	135	370	202
SIL210-16/15	15000	90.3	0.84	2900	28.5	100	120	159	197	-	-	250	500	821	200	226	60	250	M12	20	135	320	155
SIL210-16/18.5	18500	90.9	0.87	2900	34.2	100	120	159	197	-	-	250	500	822	200	226	60	250	M12	20	135	320	172
SIL210-17/22	22000	91.3	0.85	2900	40.7	100	120	159	197	-	-	291	500	906	200	226	60	250	M12	20	135	370	202
SIL210-17/30	30000	92	0.85	2900	53	100	120	159	197	-	-	305	500	963	200	226	60	250	M12	20	135	415	259
SIL210-19/30	30000	92	0.85	2900	53	100	155	173	202	-	-	305	550	942	220	231	99	255	M12	20	120	415	277
SIL210-21/30	30000	92	0.85	2900	53	100	155	173	202	-	-	305	550	942	220	231	99	255	M12	20	120	415	277
SIL210-21/37	37000	92.5	0.89	2900	65	100	155	173	202	-	-	305	550	942	220	231	99	255	M12	20	120	415	309
SIL212-14.5/15	15000	90.3	0.84	2900	28.5	125	175	182	226	-	-	250	620	807	240	285	65	310	M16	25	-	320	204
SIL212-15/18.5	18500	90.9	0.87	2900	34.2	125	175	182	226	-	-	250	620	808	240	285	65	310	M16	25	-	320	280
SIL212-16.5/30	30000	92	0.85	2900	53	125	175	182	226	-	-	305	620	949	240	285	65	310	M16	25	-	415	282
SIL212-16/22	22000	91.3	0.85	2900	40.7	125	175	182	226	-	-	291	620	892	240	285	65	310	M16	25	-	370	205
SIL212-17/37	37000	92.5	0.89	2900	65	125	175	182	226	-	-	305	620	949	240	285	65	310	M16	25	-	415	313
SIL403-14/0.25	250	74	0.64	1450	0.69	32	100	112	124	110	110	-	320	388	120	132	68	155	M10	20	90	164	36
SIL403-15/0.37	370	76.1	0.71	1450	1.06	32	100	112	124	110	110	-	320	388	120	132	68	155	M10	20	90	164	36
SIL403-17/0.55	550	78.1	0.66	1450	1.4	32	100	112	124	123	123	-	320	423	120	132	68	155	M10	20	90	185	42
SIL404-14/0.25	250	74	0.64	1450	0.69	40	82	113	129	110	110	-	340	402	130	149	58	170	M10	20	95	164	38
SIL404-15/0.37	370	76.1	0.71	1450	1.06	40	82	113	129	110	110	-	340	402	130	149	58	170	M10	20	95	164	38
SIL404-16/0.55	550	78.1	0.66	1450	1.4	40	82	113	129	123	123	-	340	437	130	149	58	170	M10	20	95	185	42
SIL404-17/0.75	750	79.6	0.72	1450	1.9	40	82	113	129	123	123	-	340	451	130	149	58	170	M10	20	95	185	45
SIL404-21/1.1	1100	81.4	0.77	1450	2.55	40	110	145	149	-	-	151	440	457	180	172	78	190	M10	20	100	193	60
SIL404-22/1.5	1500	82.8	0.75	1450	3.4	40	110	145	149	-	-	151	440	484	180	172	78	190	M10	20	100	193	61
SIL405-15/0.55	550	78.1	0.66	1450	1.4	50	103	120	138	123	123	-	340	443	164	143	48	170	M10	20	100	185	45

SIL

ELECTRICAL AND DIMENSIONAL FEATURES

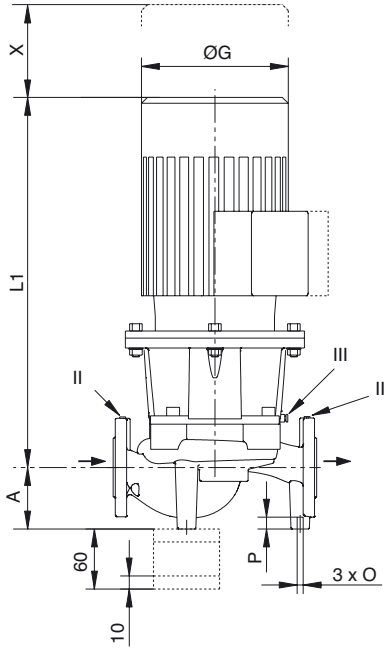

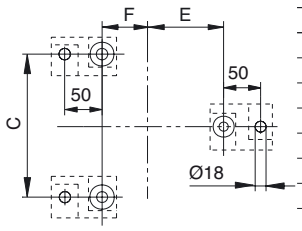

DN	ØD	Øk	Ød	holes
	mm	mm	mm	n x Ø
32	140	100	76	4 x 19
40	150	110	84	4 x 19
50	165	125	99	4 x 19
50	165	125	99	4 x 19
65	185	145	118	4 x 19
80	200	160	132	8 x 19
100	220	180	156	8 x 19
125	250	210	184	8 x 19
150	285	240	211	8 x 23
200	340	295	266	12 x 23

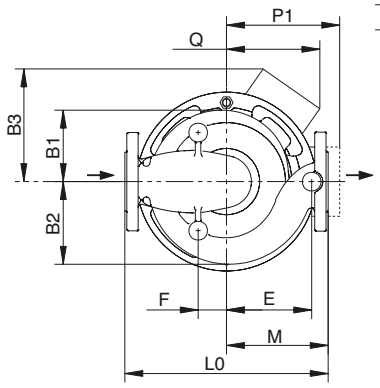

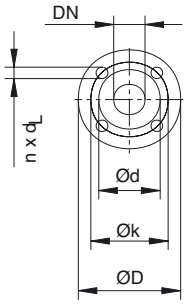

Product reference	MOTOR					PUMP																
	Nominal motor power	Motor performance %	Power factor	Rotation speed	Nominal current (approx.)	DN	A	B1	B2	B3	Q	P1	L0	L1	C	E	F	M	O	P	X	ØG	mass
	P2	η	cos ϕ	rpm	in A																		
	W						mm	mm	mm	mm	mm	mm	mm	mm	mm	mm	mm	mm	mm	mm	mm	mm	kg
SIL405-16/0.75	750	79.6	0.72	1450	1.9	50	103	120	138	123	123	-	340	457	164	143	48	170	M10	20	100	185	49
SIL405-17/1.1	1100	81.4	0.77	1450	2.55	50	103	120	138	144	144	-	340	469	164	143	48	170	M10	20	100	193	55
SIL405-20/1.5	1500	82.8	0.75	1450	3.4	50	120	145	150	-	-	151	440	485	160	170	70	190	M10	20	100	193	65
SIL405-22/2.2	2200	84.3	0.73	1450	5	50	120	145	150	-	-	160	440	541	160	170	70	190	M10	20	100	217	77
SIL405-26/3	3000	85.5	0.75	1450	6.6	50	122	174	178	-	-	168	440	602	200	200	70	220	M10	20	120	220	86
SIL405-27/3	3000	85.5	0.75	1450	6.6	50	122	174	178	-	-	168	440	602	200	200	70	220	M10	20	120	220	86
SIL405-27/4	4000	86.6	0.79	1450	8.4	50	122	174	178	-	-	188	440	645	200	200	70	220	M10	20	120	246	93
SIL 406-12/0.55	550	78.1	0.66	1450	1.4	65	120	112	134	-	-	-	340	440	140	140	60	160	M12	20	110	185	46
SIL 406-13/0.75	750	79.6	0.72	1450	1.9	65	120	112	134	-	-	-	340	454	140	140	60	160	M12	20	110	185	46
SIL 406-14/1.1	1100	81.4	0.77	1450	2.55	65	120	112	134	-	-	-	340	466	140	140	60	160	M12	20	110	193	51
SIL406-15/0.75	750	79.6	0.72	1450	1.9	65	110	126	146	123	123	-	430	463	180	195	60	215	M12	20	120	185	54
SIL406-16/1.1	1100	81.4	0.77	1450	2.55	65	110	126	146	144	144	-	430	475	180	195	60	215	M12	20	120	193	60
SIL406-17/1.1	1100	81.4	0.77	1450	2.55	65	110	126	146	144	144	-	430	475	180	195	60	215	M12	20	120	193	62
SIL406-17/1.5	1500	82.8	0.75	1450	3.4	65	110	126	146	144	144	-	430	502	180	195	60	215	M12	20	120	193	60
SIL406-21/2.2	2200	84.3	0.73	1450	5	65	130	150	168	-	-	160	475	550	200	225	50	245	M12	20	110	217	80
SIL406-22/2.2	2200	84.3	0.73	1450	5	65	130	150	168	-	-	160	475	550	200	225	50	245	M12	20	110	217	80
SIL406-22/3	3000	85.5	0.75	1450	6.6	65	130	150	168	-	-	168	475	585	200	225	50	245	M12	20	110	220	83
SIL406-25/3	3000	85.5	0.75	1450	6.6	65	140	174	187	-	-	168	475	606	200	215	80	235	M12	20	120	220	89
SIL406-25/4	4000	86.6	0.79	1450	8.4	65	140	174	187	-	-	188	475	649	200	215	80	235	M12	20	120	246	96
SIL406-27/4	4000	86.6	0.79	1450	8.4	65	140	174	187	-	-	188	475	649	200	215	80	235	M12	20	120	246	96
SIL406-27/5.5	5500	87.7	0.78	1450	11.3	65	140	174	187	-	-	188	475	650	200	215	80	235	M12	20	120	279	119
SIL408-14.5/1.1	1100	81.4	0.77	1450	2.55	80	120	136	162	144	144	-	440	473	180	173	72	200	M12	20	120	193	68
SIL408-15/1.1	1100	81.4	0.77	1450	2.55	80	120	136	162	144	144	-	440	473	180	173	72	200	M12	20	120	193	68

ELECTRICAL AND DIMENSIONAL FEATURES

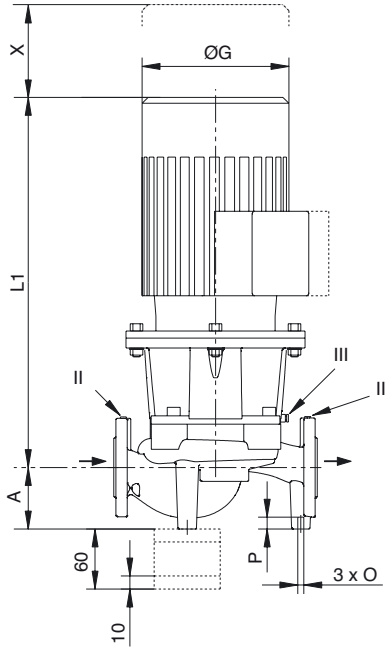

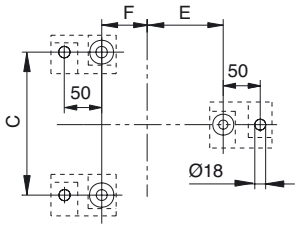

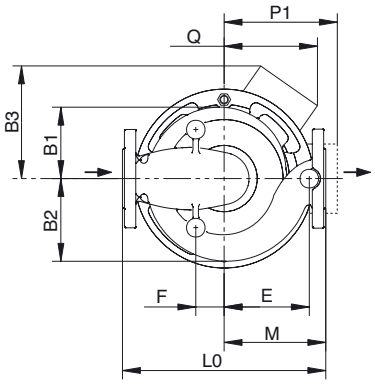

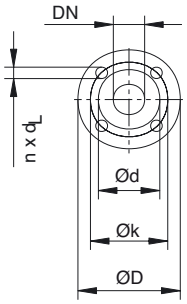

Product reference	MOTOR					PUMP																
	Nominal motor power	Motor performance %	Power factor	Rotation speed	Nominal current (approx.)	DN	A	B1	B2	B3	Q	P1	L0	L1	C	E	F	M	O	P	X	ØG	mass
	P2	η	cos ϕ	rpm	in A																		
	W						mm	mm	mm	mm	mm	mm	mm	mm	mm	mm	mm	mm	mm	mm	mm	mm	kg
SIL408-16/1.5	1500	82.8	0.75	1450	3.4	80	120	136	162	144	144	-	440	500	180	173	72	200	M12	20	120	193	68
SIL408-17/2.2	2200	84.3	0.73	1450	5	80	120	136	162	150	150	-	440	556	180	173	72	200	M12	20	120	217	81,3
SIL408-21/3	3000	85.5	0.75	1450	6.6	80	145	157	182	-	-	168	500	593	220	208	62	230	M12	20	120	220	93
SIL408-22/4	4000	86.6	0.79	1450	8.4	80	145	157	182	-	-	188	500	636	220	208	62	230	M12	20	120	246	97
SIL408-27/5.5	5500	87.7	0.78	1450	11.3	80	125	180	202	-	-	188	500	637	240	223	102	245	M12	20	115	279	132
SIL410-14.5/1.1	1100	81.4	0.77	1450	2.55	100	120	159	197	144	144	-	500	508	200	226	60	250	M12	20	135	193	81
SIL410-15/1.5	1500	82.8	0.75	1450	3.4	100	120	159	197	144	144	-	500	535	200	226	60	250	M12	20	135	193	81
SIL410-16/2.2	2200	84.3	0.73	1450	5	100	120	159	197	150	150	-	500	590	200	226	60	250	M12	20	135	217	98
SIL410-17/2.2	2200	84.3	0.73	1450	5	100	120	159	197	150	150	-	500	590	200	226	60	250	M12	20	135	217	90
SIL410-17/3	3000	85.5	0.75	1450	6.6	100	120	159	197	155	155	-	500	625	200	226	60	250	M12	20	135	220	96
SIL410-20/3	3000	85.5	0.75	1450	6.6	100	155	173	202	-	-	168	550	603	220	231	99	255	M12	20	120	220	103
SIL410-20/4	4000	86.6	0.79	1450	8.4	100	155	173	202	-	-	188	550	646	220	231	99	255	M12	20	120	246	110
SIL410-22/4	4000	86.6	0.79	1450	8.4	100	155	173	202	-	-	188	550	646	220	231	99	255	M12	20	120	246	110
SIL410-22/5.5	5500	87.7	0.78	1450	11.3	100	155	173	202	-	-	188	550	647	220	231	99	255	M12	20	120	279	134
SIL410-25/5.5	5500	87.7	0.78	1450	11.3	100	180	188	214	-	-	188	550	647	240	236	114	260	M12	20	120	279	146
SIL410-25/7.5	7500	88.7	0.81	1450	15	100	180	188	214	-	-	250	550	698	240	236	114	260	M12	20	120	312	157
SIL410-26/11	7500	88.7	0.81	1450	15	100	180	188	214	-	-	250	550	698	240	236	114	260	M12	20	120	312	159
SIL410-26/7.5	11000	89.8	0.79	1450	22.5	100	180	188	214	-	-	250	550	761	240	236	114	260	M12	20	120	320	187
SIL410-27/11	11000	89.8	0.79	1450	22.5	100	180	188	214	-	-	250	550	761	240	236	114	260	M12	20	120	320	188
SIL412-14.5/1.5	1500	82.8	0.75	1450	3.4	125	175	182	226	-	-	151	620	521	240	285	65	310	M16	25	60	193	103
SIL412-15/2.2	2200	84.3	0.73	1450	5	125	175	182	226	-	-	160	620	577	240	285	65	310	M16	25	60	217	113
SIL412-16/3	3000	85.5	0.75	1450	6.6	125	175	182	226	-	-	168	620	612	240	285	65	310	M16	25	70	220	121
SIL412-17/4	4000	86.6	0.79	1450	8.4	125	175	182	226	-	-	188	620	655	240	285	65	310	M16	25	70	246	104

SIL

ELECTRICAL AND DIMENSIONAL FEATURES

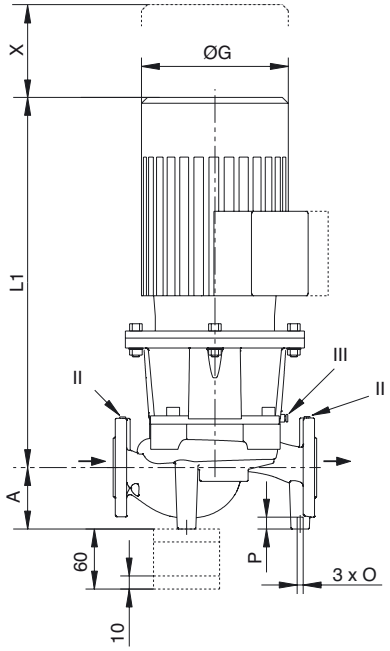

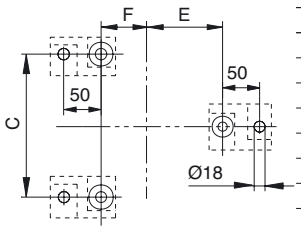

DN	ØD	Øk	Ød	holes
	mm	mm	mm	n x Ø
32	140	100	76	4 x 19
40	150	110	84	4 x 19
50	165	125	99	4 x 19
50	165	125	99	4 x 19
65	185	145	118	4 x 19
80	200	160	132	8 x 19
100	220	180	156	8 x 19
125	250	210	184	8 x 19
150	285	240	211	8 x 23
200	340	295	266	12 x 23

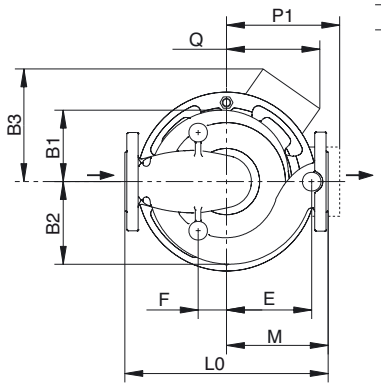

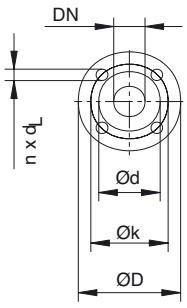

Product reference	MOTOR					PUMP																
	Nominal motor power	Motor performance %	Power factor	Rotation speed	Nominal current (approx.)	DN	A	B1	B2	B3	Q	P1	L0	L1	C	E	F	M	O	P	X	ØG	mass
	P2	η	cos ϕ	rpm	in A																		
	W						mm	mm	mm	mm	mm	mm	mm	mm	mm	mm	mm	mm	mm	mm	mm	mm	kg
SIL412-19/4	4000	86.6	0.79	1450	8.4	125	175	177	212	-	-	188	620	658	280	266	54	280	M16	25	120	246	124
SIL412-21/5.5	5500	87.7	0.78	1450	11.3	125	175	177	212	-	-	188	620	659	280	266	54	280	M16	25	120	279	147
SIL412-22/5.5	5500	87.7	0.78	1450	11.3	125	175	177	212	-	-	188	620	659	280	266	54	280	M16	25	120	279	147
SIL412-22/7.5	7500	88.7	0.81	1450	15	125	175	177	212	-	-	250	620	710	280	266	54	280	M16	25	120	312	163
SIL412-25/11	11000	89.8	0.79	1450	22.5	125	200	232	264	-	-	250	620	774	250	254	125	280	M16	25	130	320	212
SIL412-27/11	11000	89.8	0.79	1450	22.5	125	200	232	264	-	-	250	620	774	250	254	125	280	M16	25	130	320	212
SIL412-27/15	15000	90.6	0.83	1450	28.8	125	200	232	264	-	-	250	620	814	250	254	125	280	M16	25	130	320	235
SIL412-30/15	15000	90.6	0.83	1450	28.8	125	185	238	270	-	-	250	700	840	280	315	140	340	M16	25	140	320	267
SIL412-30/18.5	18500	91.2	0.8	1450	37.3	125	185	238	270	-	-	258	700	924	280	315	140	340	M16	25	140	370	291
SIL412-32/18.5	18500	91.2	0.8	1450	37.3	125	185	238	270	-	-	258	700	924	280	315	140	340	M16	25	140	370	291
SIL412-32/22	22000	91.6	0.84	1450	41.5	125	185	238	270	-	-	258	700	924	280	315	140	340	M16	25	140	370	307
SIL412-34/22	22000	91.6	0.84	1450	41.5	125	185	238	270	-	-	258	700	924	280	315	140	340	M16	25	140	370	307
SIL412-34/30	30000	92.3	0.85	1450	55.7	125	185	238	270	-	-	305	700	981	280	315	140	340	M16	25	140	415	366
SIL415-19/5.5	5500	87.7	0.78	1450	11.3	150	200	202	249	-	-	188	700	672	260	284	116	310	M16	25	130	279	180
SIL415-20/7.5	7500	88.7	0.81	1450	15	150	200	202	249	-	-	250	700	723	260	284	116	310	M16	25	130	312	194
SIL415-22/11	11000	89.8	0.79	1450	22.5	150	200	202	249	-	-	250	700	786	260	284	116	310	M16	25	130	320	220
SIL415-25/15	15000	90.6	0.83	1450	28.8	150	230	278	320	-	-	250	700	845	288	304	146	330	M16	25	135	320	296
SIL415-26/15	15000	90.6	0.83	1450	28.8	150	230	278	320	-	-	250	700	845	288	304	146	330	M16	25	135	320	296
SIL415-26/18.5	18500	91.2	0.8	1450	37.3	150	230	278	320	-	-	258	700	929	288	304	146	330	M16	25	135	370	319
SIL415-27/18.5	18500	91.2	0.8	1450	37.3	150	230	278	320	-	-	258	700	929	288	304	146	330	M16	25	135	370	319
SIL415-27/22	22000	91.6	0.84	1450	41.5	150	230	278	320	-	-	258	700	929	288	304	146	330	M16	25	135	370	335
SIL415-30.5/30	30000	92.3	0.85	1450	55.7	150	230	300	337	-	-	305	770	994	300	359	135	385	M16	25	120	415	422

ELECTRICAL AND DIMENSIONAL FEATURES

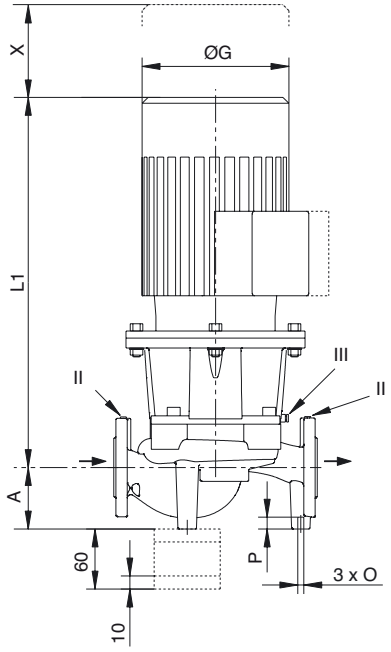

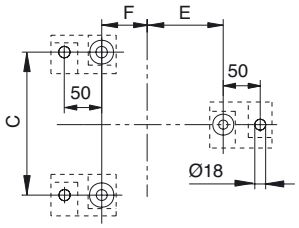

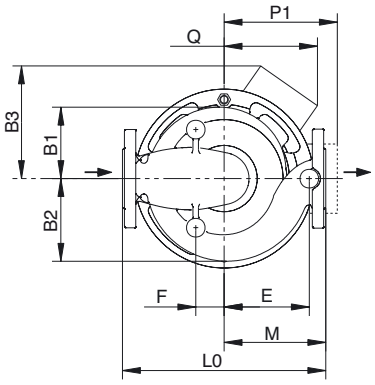

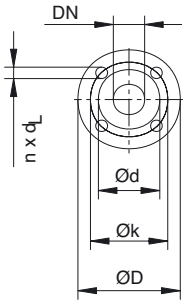

Product reference	MOTOR					PUMP																
	Nominal motor power	Motor performance %	Power factor	Rotation speed	Nominal current (approx.)	DN	A	B1	B2	B3	Q	P1	L0	L1	C	E	F	M	O	P	X	ØG	mass
	P2	η	cos ϕ	rpm	in A		mm	mm	mm	mm	mm	mm	mm	mm	mm	mm	mm	mm	mm	mm	mm	mm	kg
SIL415-32.5/30	30000	92.3	0.85	1450	55.7	150	230	300	337	-	-	305	770	994	300	359	135	385	M16	25	120	415	422
SIL415-32.5/37	37000	92.7	0.84	1450	69	150	230	300	337	-	-	325	770	1053	300	359	135	385	M16	25	150	456	567
SIL415-33.5/37	37000	92.7	0.84	1450	69	150	230	300	337	-	-	325	770	1053	300	359	135	385	M16	25	150	456	534
SIL415-33.5/45	45000	93.1	0.83	1450	83.3	150	230	300	337	-	-	325	770	1113	300	359	135	385	M16	25	150	456	567
SIL420-23/11	11000	89.8	0.79	1450	22.5	200	245	281	362	-	-	250	800	830	330	270	165	370	M16	25	140	320	334
SIL420-24/15	15000	90.6	0.83	1450	28.8	200	245	281	362	-	-	250	800	870	330	270	165	370	M16	25	140	320	357
SIL420-25/18.5	18500	91.2	0.8	1450	37.3	200	245	281	362	-	-	258	800	954	330	270	165	370	M16	25	140	370	381
SIL420-26.5/22	22000	91.6	0.84	1450	41.5	200	245	281	362	-	-	258	800	954	330	270	165	370	M16	25	140	370	397
SIL420-26.5/30	30000	92.3	0.85	1450	55.7	200	245	281	362	-	-	305	800	1011	330	270	165	370	M16	25	140	415	455
SIL420-26/22	22000	91.6	0.84	1450	41.5	200	245	281	362	-	-	258	800	954	330	270	165	370	M16	25	140	370	397
SIL420-27/30	30000	92.3	0.85	1450	55.7	200	245	281	362	-	-	305	800	1011	330	270	165	370	M16	25	140	415	455
SIL420-30/37	37000	92.7	0.84	1450	69	200	245	322	370	-	-	325	820	1078	360	380	170	410	M16	35	150	456	608
SIL420-31.5/37	37000	92.7	0.84	1450	69	200	245	322	370	-	-	325	820	1078	360	380	170	410	M16	35	150	456	639
SIL420-33.5/37	37000	92.7	0.84	1450	69	200	245	322	370	-	-	325	820	1078	360	380	170	410	M16	35	150	456	609
SIL420-33.5/45	45000	93.1	0.83	1450	83.3	200	245	322	370	-	-	325	820	1138	360	380	170	410	M16	35	150	456	756
SIL420-34.5/45	45000	93.1	0.83	1450	83.3	200	245	322	370	-	-	325	820	1138	360	380	170	410	M16	35	150	456	640
SIL420-34.5/55	55000	93.5	0.85	1450	100	200	245	322	370	-	-	392	820	1306	360	380	170	410	M16	35	150	515	756
SIL620-24/7.5	7500	87.2	0.66	950	18.9	200	245	281	362	-	-	250	800	869	330	270	165	370	M16	25	140	312	349
SIL620-26/7.5	7500	87.2	0.66	950	18.9	200	245	281	362	-	-	250	800	869	330	270	165	370	M16	25	140	312	349
SIL620-27/11	11000	88.7	0.71	950	25.5	200	245	281	362	-	-	250	800	869	330	270	165	370	M16	25	140	312	356

SIL

ASSEMBLY POSITIONS

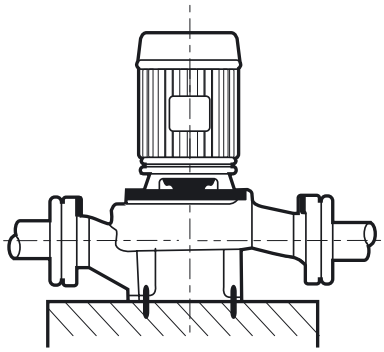

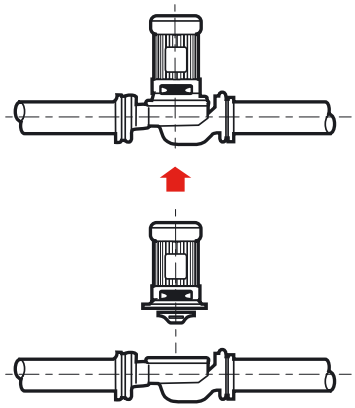

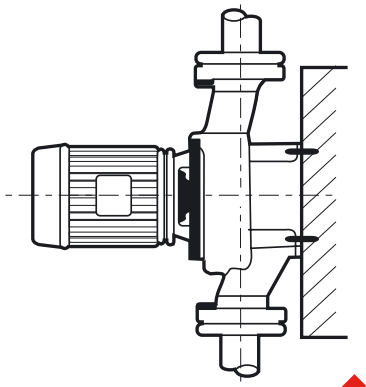

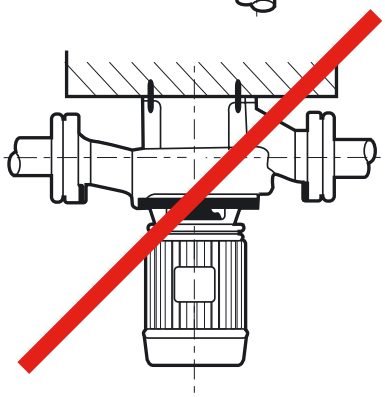

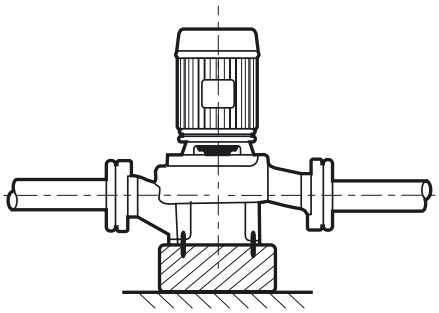

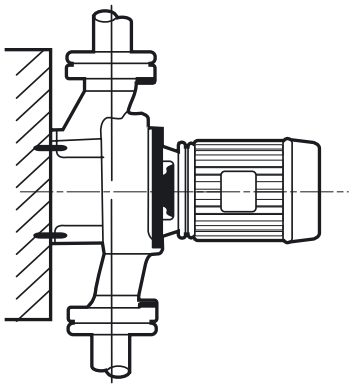

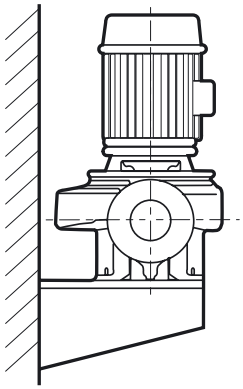

The assembly position with the horizontal motor shaft is authorised up to a nominal power of 15 kW.

The «downward facing motor» assembly position is not permitted.

PARTICULARITIES

a) Alimentation

P2 ≤ 3 kW: three phase 400 V **Y** 50 Hz
three phase 230 V **Y** 50 Hz
P2 ≥ 4 kW: three phase 400 V **Δ** 50 Hz.

b) Installation

- Direct assembly on horizontal piping (or vertical up to max. 15 kW) or on solid equipment.
- The installation must protect the pump against adverse weather and frost (no direct exposure to rain and sun).

c) Packaging

Pump delivered with backflange joints.

d) Maintenance

- Repairs: see recommended spare parts.

RECOMMENDED ACCESSORIES

- Backflanges
- Pressure tap kit
- Protective circuit breaker
- Shut-off valves
- Anti-vibration sleeves
- Non-return valves
- Support foot kit.

Optional special mechanical seal for 20 - 40% glycol water if temperature exceeds 40°C (contact us).

CONNECTION DIAGRAM

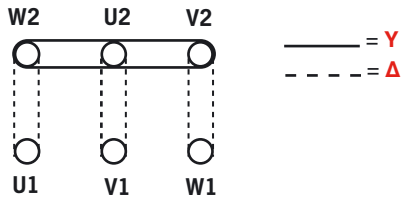

P2 ≤ 3 kW 3 ~ 400 V = **Y**
3 ~ 230 V = **Δ**
P2 ≥ 4 kW 3 ~ 400 V = **Δ**

Remove catches for star delta starting

DIL

DOUBLE IN-LINE PUMPS
Heating – Air conditioning
50 Hz

RANGE OF USE

Flow rates up to:	**1100 m³/h**
Manometric head up to:	**70 m**
Maximum operating pressure:	
	13 bar up to +140°C
	16 bar up to +120°C
Temperature:	**–20° to +140°C**
Nominal diameter of holes:	**32 to 200**
MEI* of reference:	**≥ 0,10**

*Minimum Efficiency Index

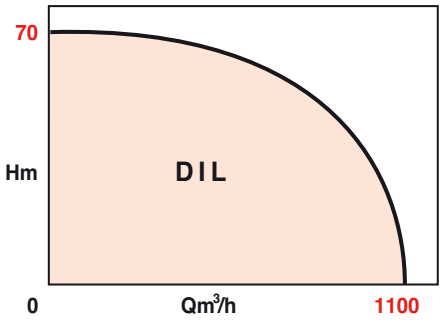

APPLICATIONS

- Heating water systems according to VDI2035
- Iced water and glycol water systems (from 20 to 40% glycol) and maximum temp 40°C
- Cooling water systems
- For all industries pumping clean liquids, without abrasive particles, chemically neutral and non-explosive.

ADVANTAGES

- **High hydraulic efficiency**
- **Low electrical consumption**
- **Mounted directly onto pipework (horizontal or vertical) or onto pad**
- **Low noise levels**
- **Complete interchangeability between single pumps and double pumps**



DIL

DESIGN

• Hydraulic part

- Single stage centrifuge
- Housing with flanges, holes in line
- Flanges fitted with holes for pressure tapping
- Impellers hydraulically and dynamically balanced
- Waterproofed by standard mechanical seal

• Lantern

Fitted with holes to drain off condensates, in vertical and horizontal positions

• Motor

IE2

Standardised with flanges. Coupled to the pump by rigid coupling

Speed:	1450 and 2900 rpm
3 ~ winding ≤ 3 kW:	230 V Δ 50 Hz
	400 V Y 50 Hz
3 ~ ≥ 4 kW:	400 V Δ 50 Hz
Insulation class:	155 (F)
Protection class:	IP55
CE compliance:	EN 809

Options: isothermal protection, 60 Hz... (consult us)

BASIC CONSTRUCTION

Main parts	Material
Housing of pump	Cast iron EN GJL 250
Impeller	Cast iron EN GJL 200 Bronze*
Lantern	Cast iron EN GJL 250
Shaft	Steel X39 Cr Mo 17.1
Mechanical seal**	Graphite/Carbide Si/EP

* Options

** Others mechanical seals, consult us

IDENTIFICATION

2 05 - 16/5,5

DIL 4 05 - 17/1,1

DIL: code for double pump

2 pole: 2900 rpm
4 pole: 1450 rpm

Nominal diameter of holes in cm

Nominal diameter of the impeller in cm

Power of motor in kW

CROSS-SECTION DIAGRAM

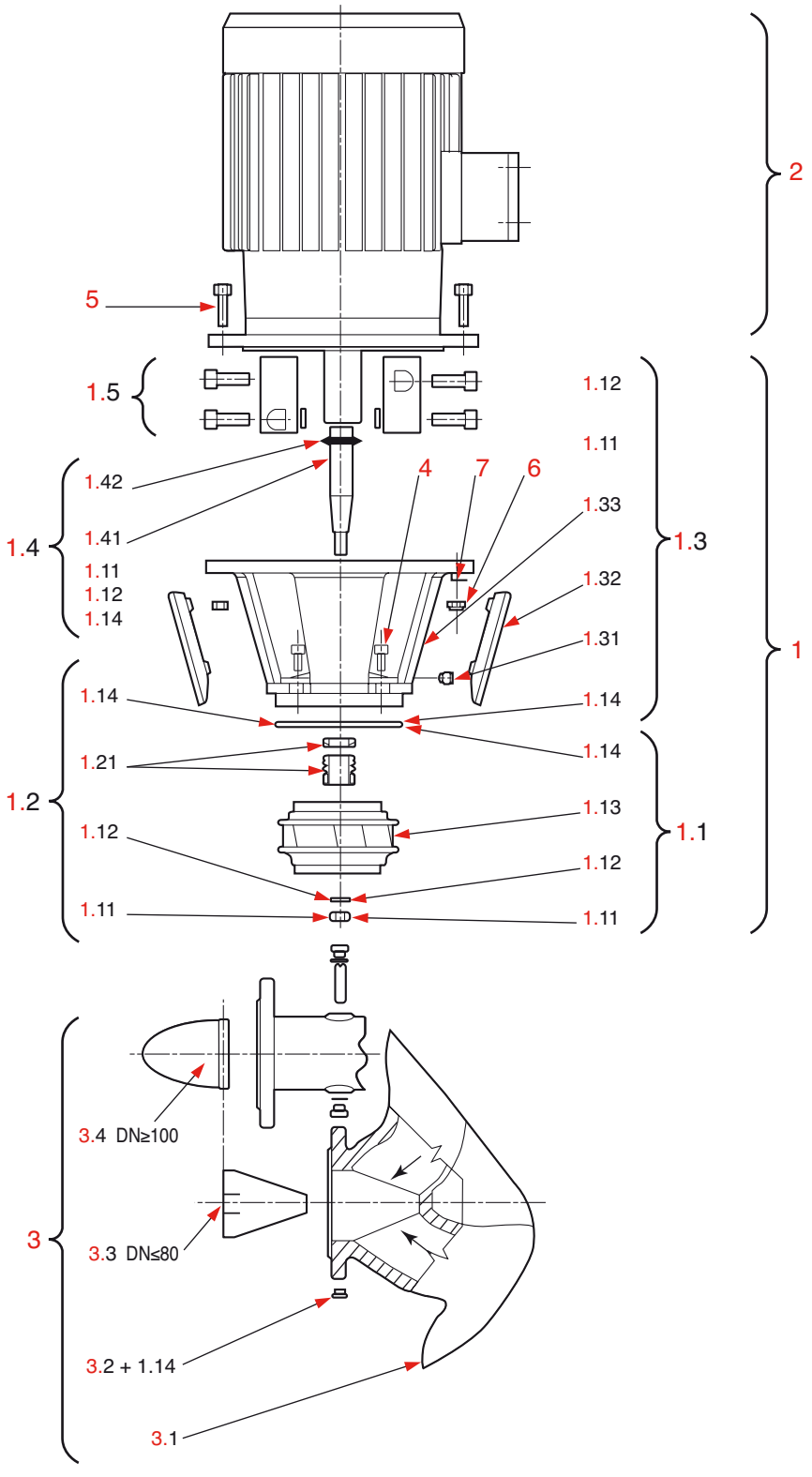

1. Complete batch
   - 1.1 Set of spare parts with
     - 1.11 Nut
     - 1.12 Washer
     - 1.13 Impeller
     - 1.14 O-ring
   - 1.2 Set of spare mechanical seal parts with
     - 1.21 Complete mechanical seal
   - 1.3 Set of spare lantern parts with
     - 1.31 Bleeder screw
     - 1.32 Coupling protector
     - 1.33 Lantern
   - 1.4 Set of spare shaft parts with
     - 1.41 Shaft
     - 1.42 Spring retaining ring
   - 1.5 Complete coupling
2. Motor
3. Complete pump housing with
   - 3.1 Pump housing
   - 3.2 Plug for the pressure holes
   - 3.3 Directional flap ≤ nominal diameter 80
   - 3.4 Directional flap ≥ nominal diameter 100
4. Fixing screw for lantern/pump
5. Fixing screw for motor/lantern
6. Nut for motor/lantern fixing
7. Washer for motor/lantern fixing

DIL

GENERAL PRESET CHARTS

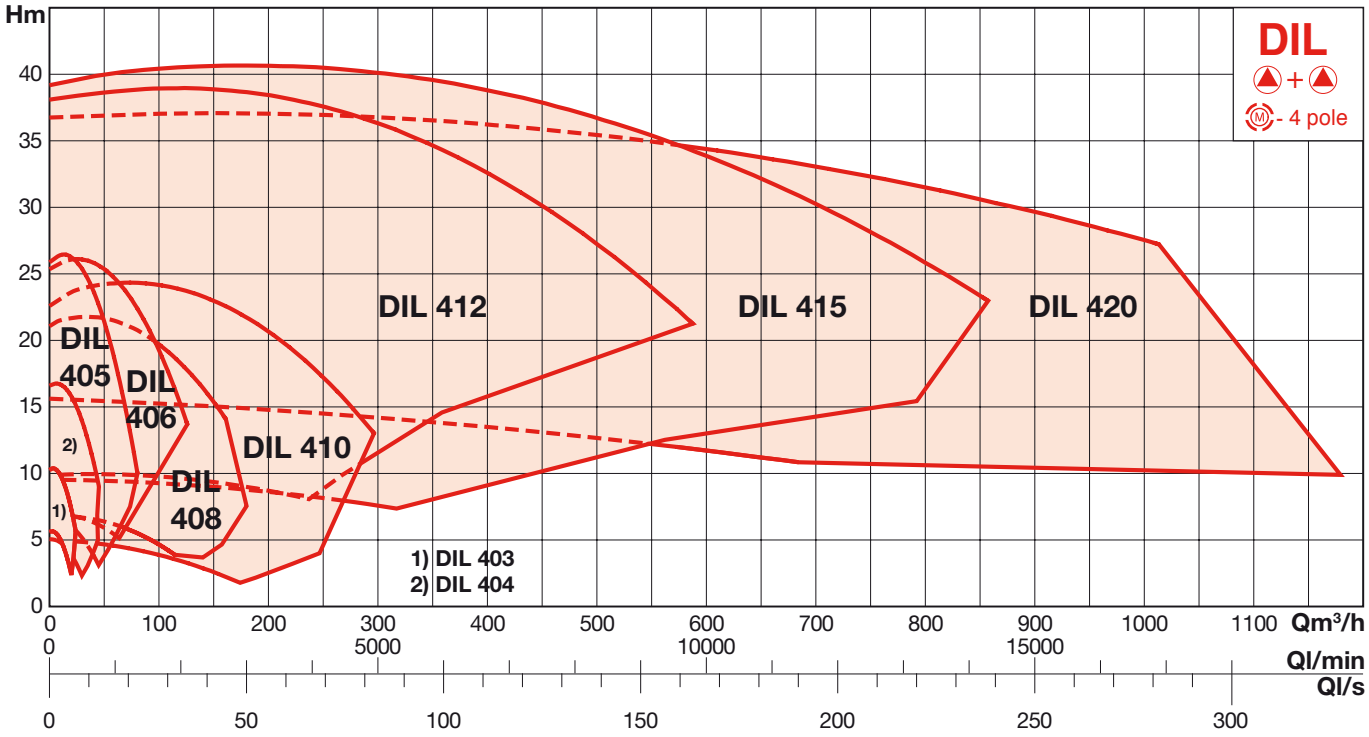

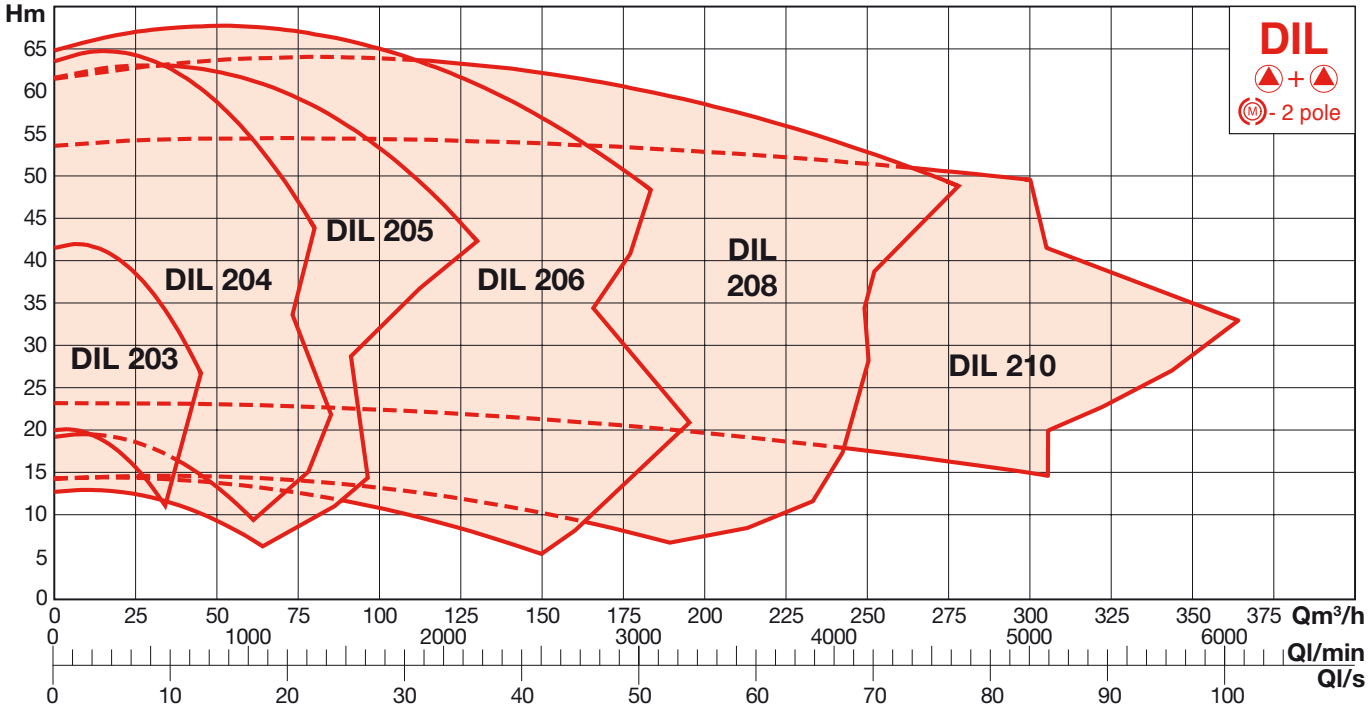

HYDRAULIC PERFORMANCES OF 4 POLE DIL

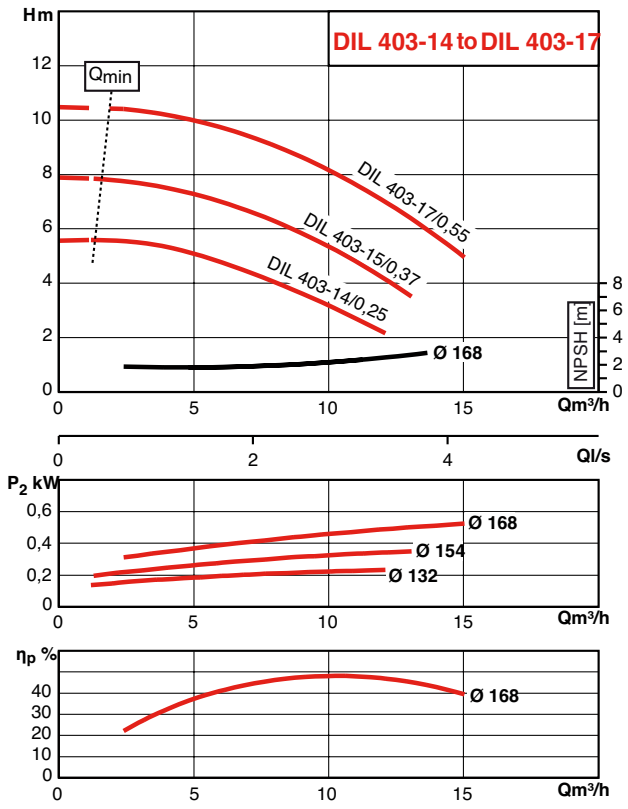

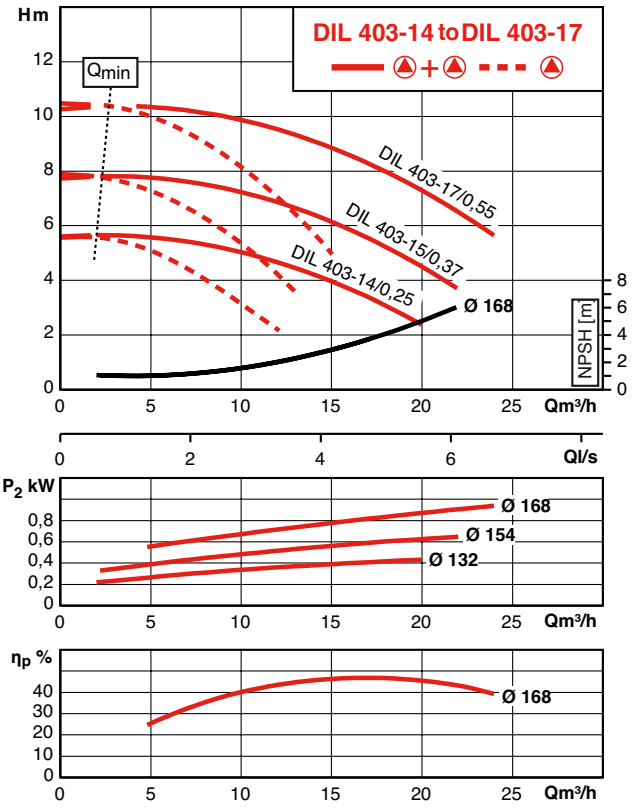

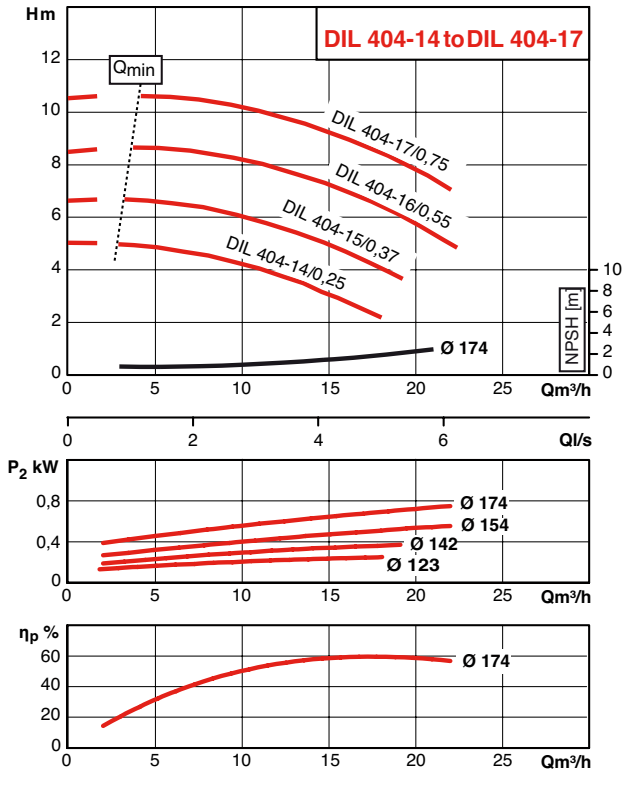

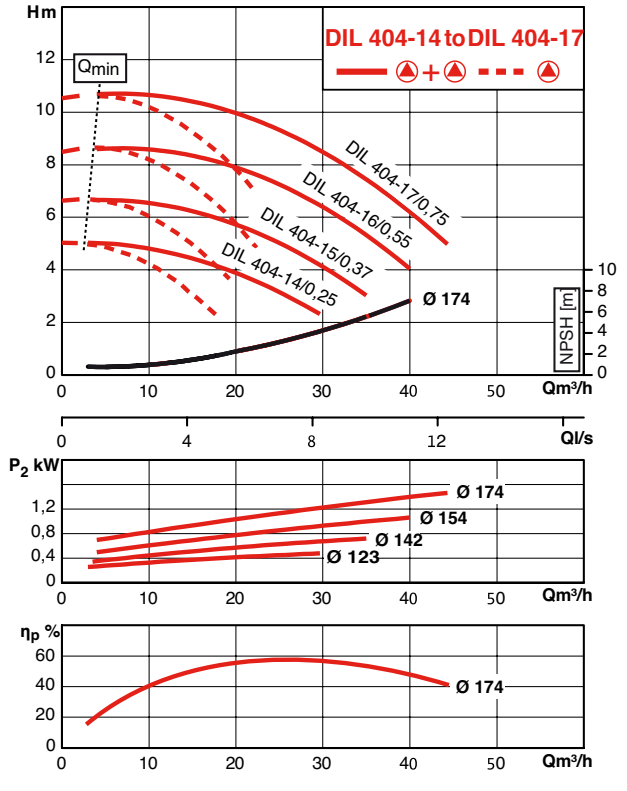

DIL

HYDRAULIC PERFORMANCES OF 4 POLE DIL

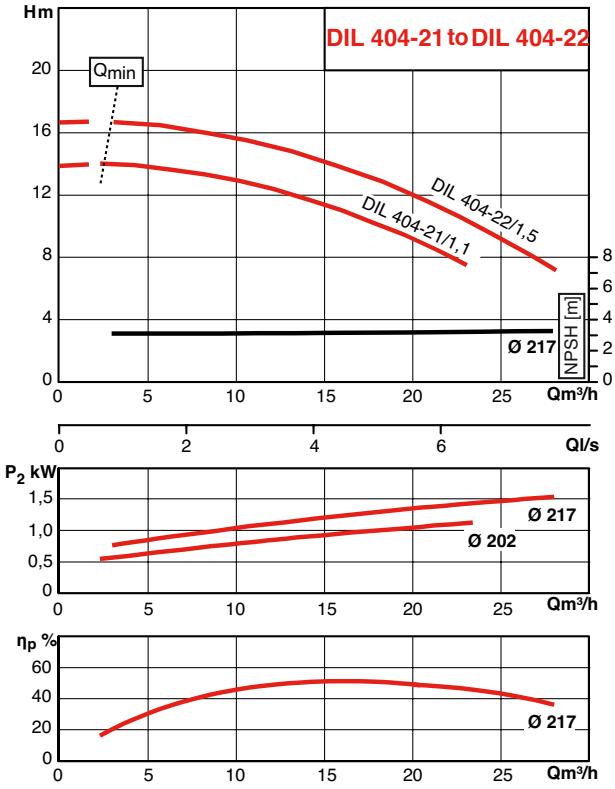

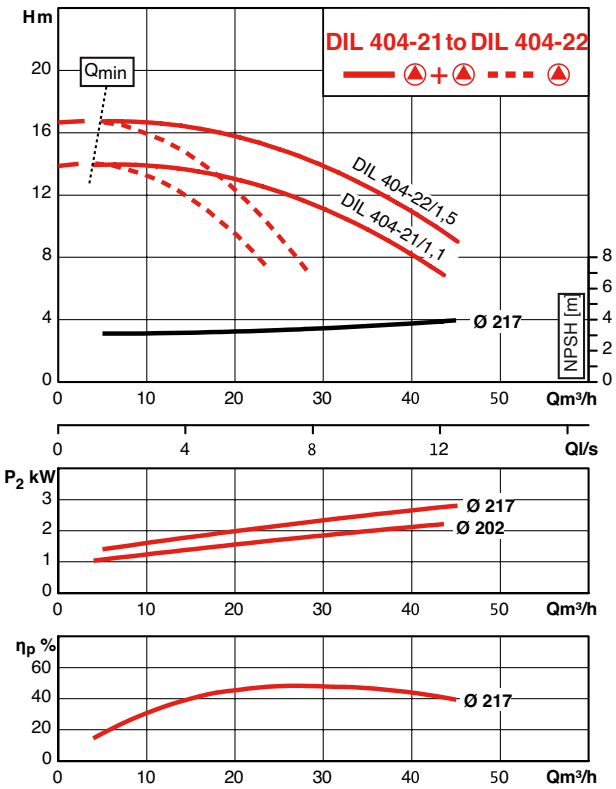

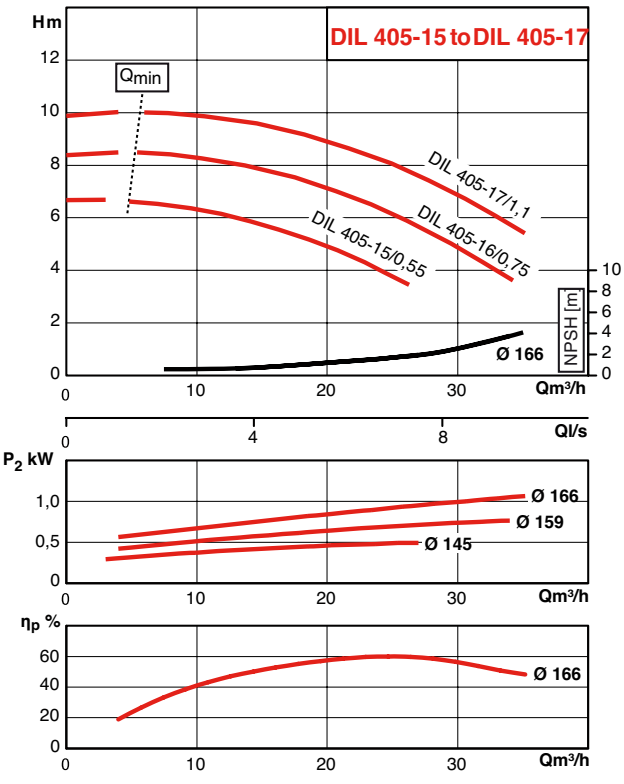

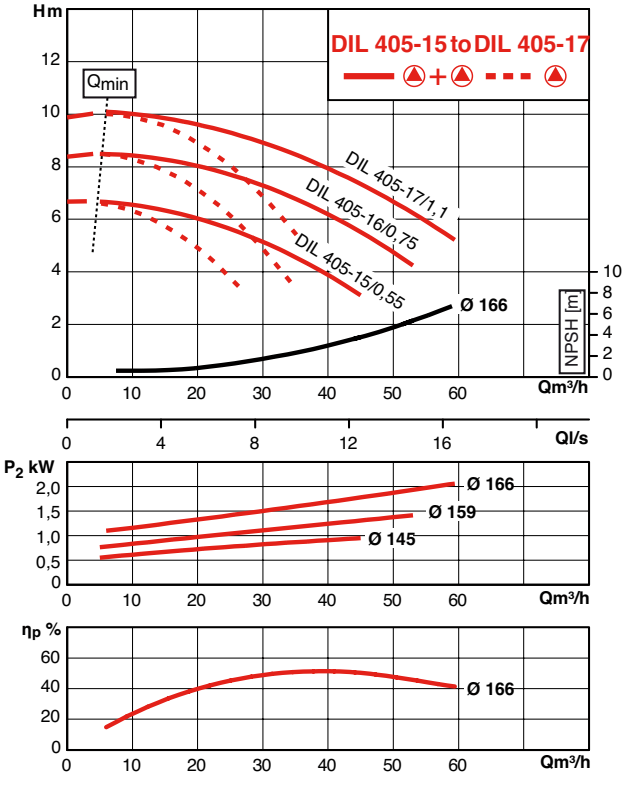

HYDRAULIC PERFORMANCES OF 4 POLE DIL

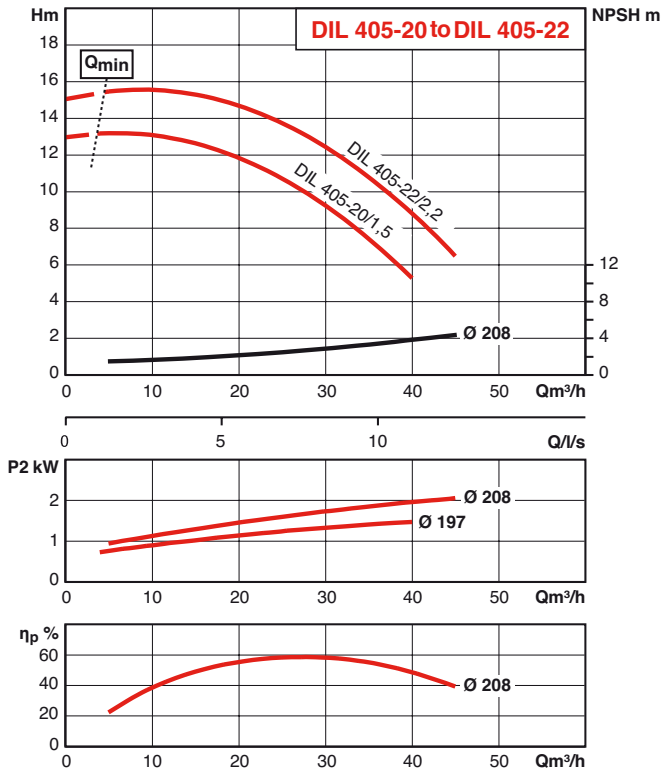

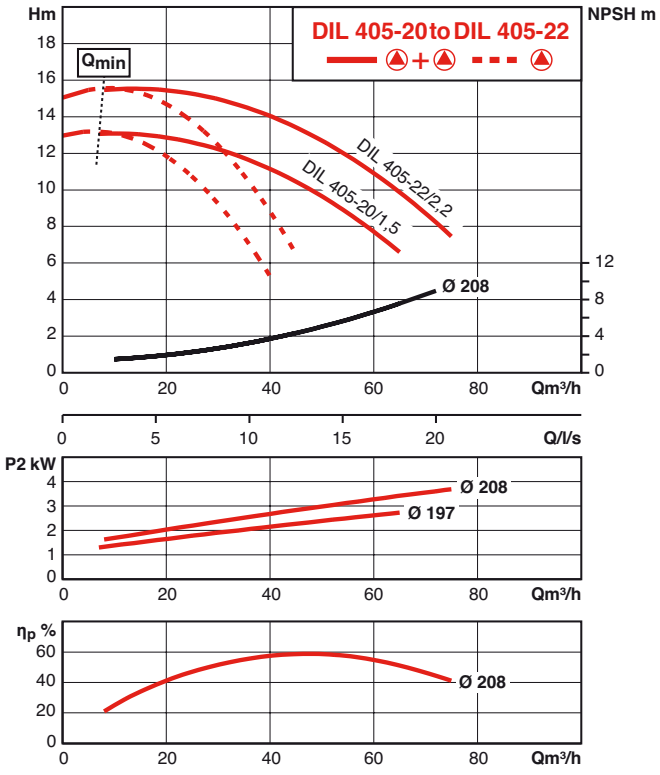

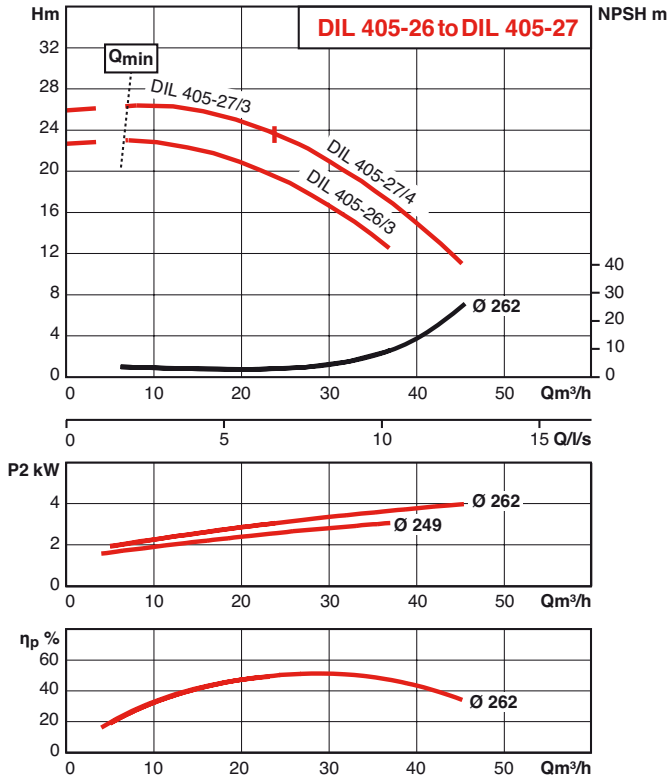

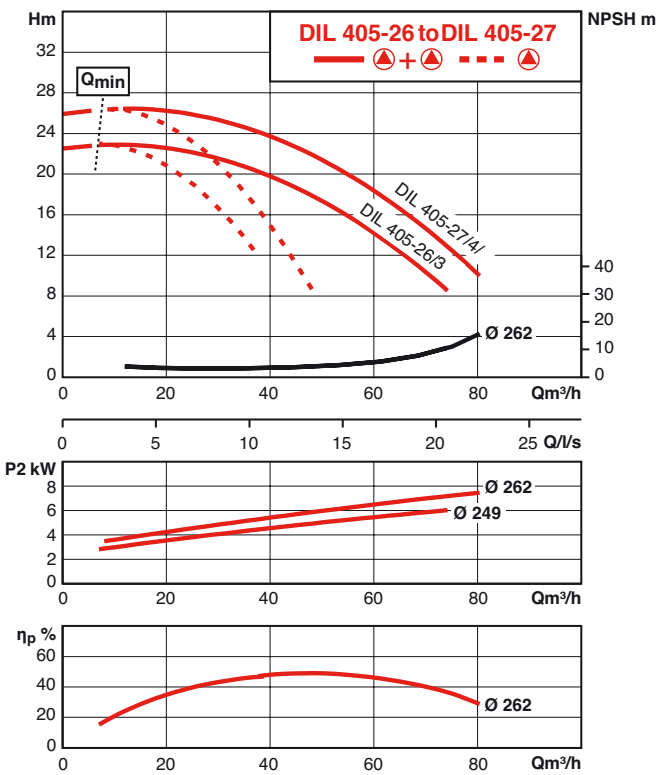

DIL

HYDRAULIC PERFORMANCES OF 4 POLE DIL

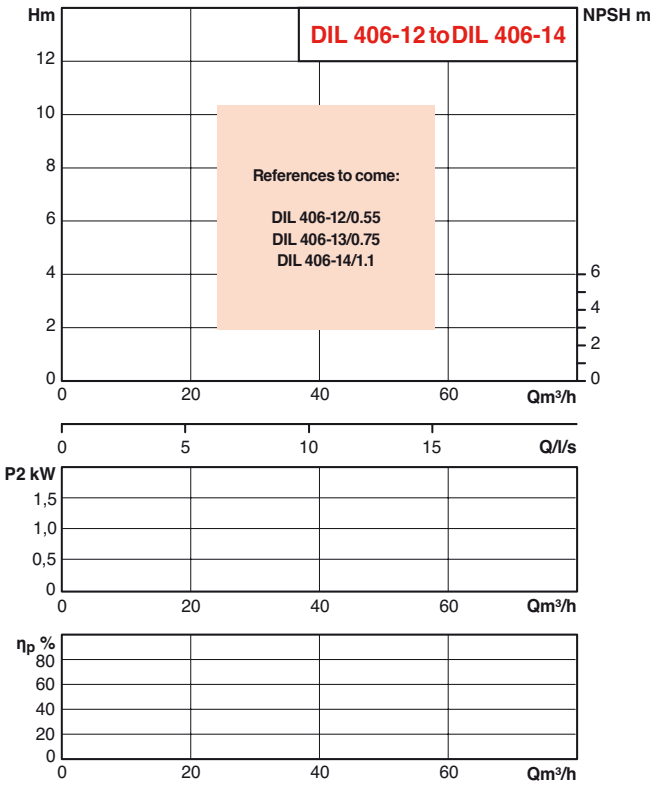

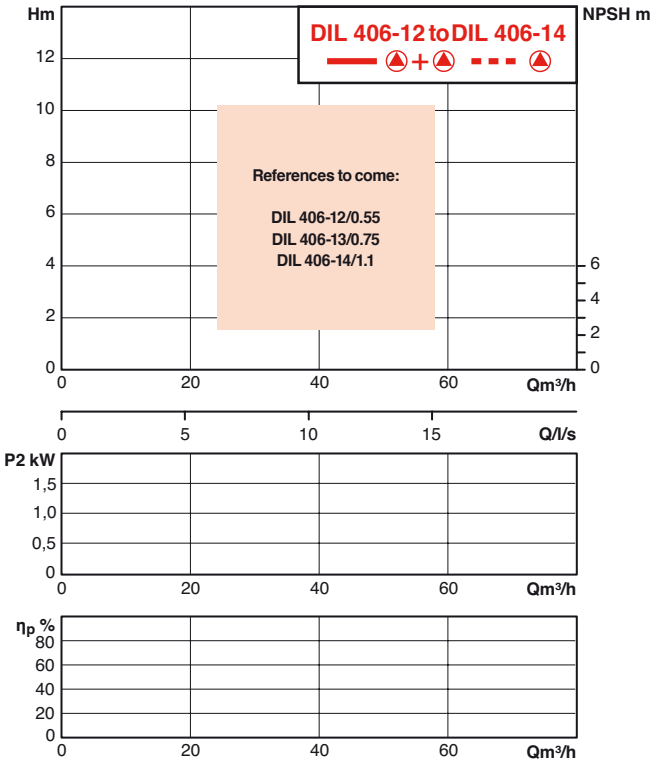

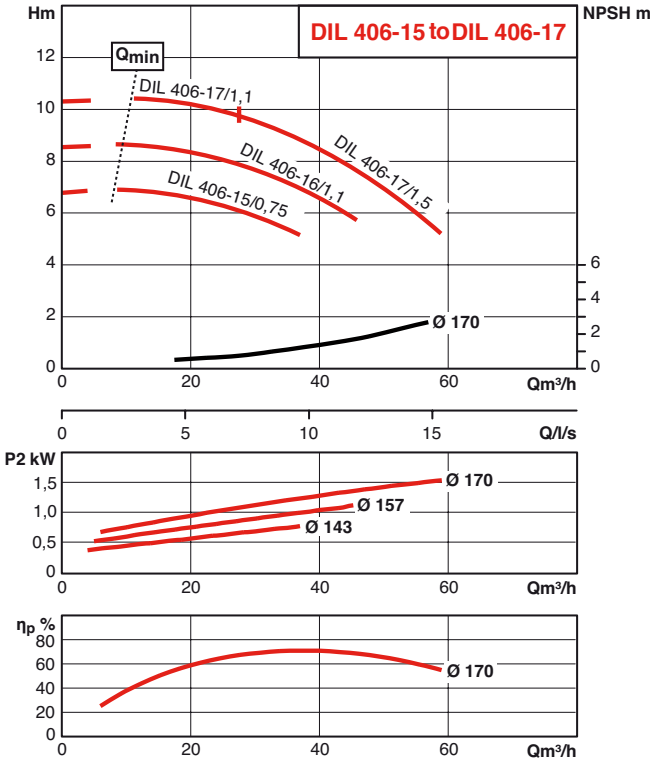

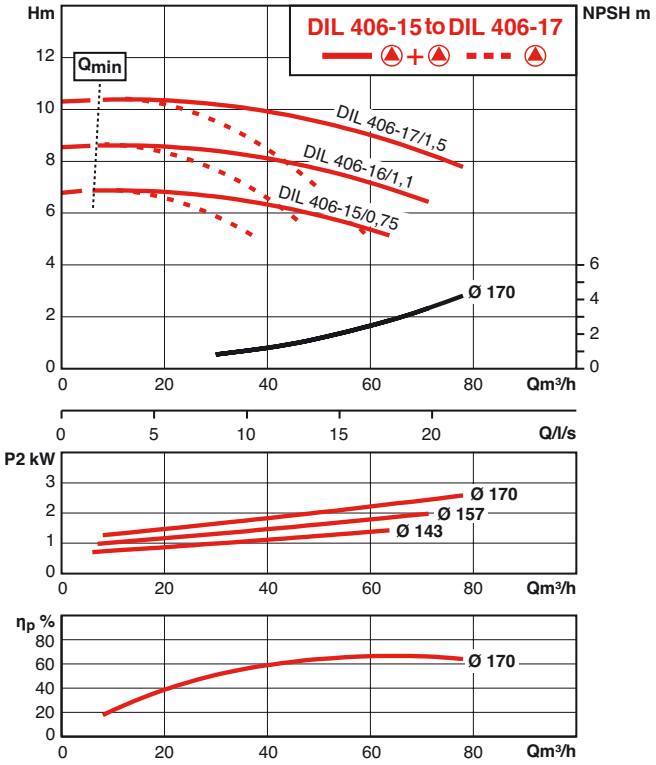

HYDRAULIC PERFORMANCES OF 4 POLE DIL

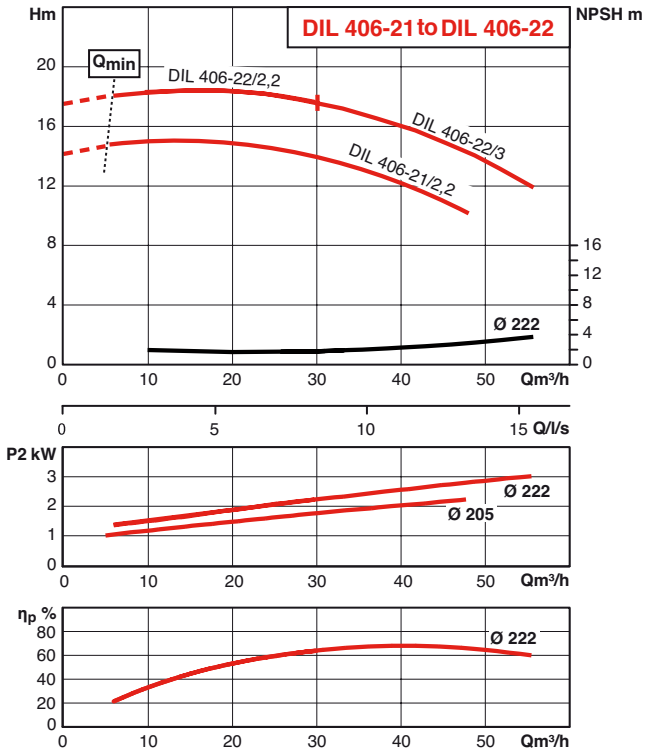

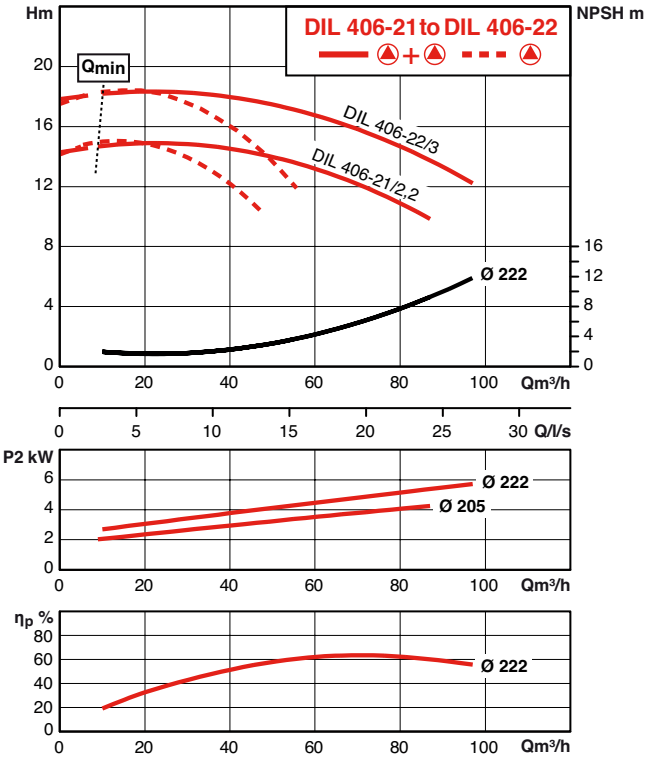

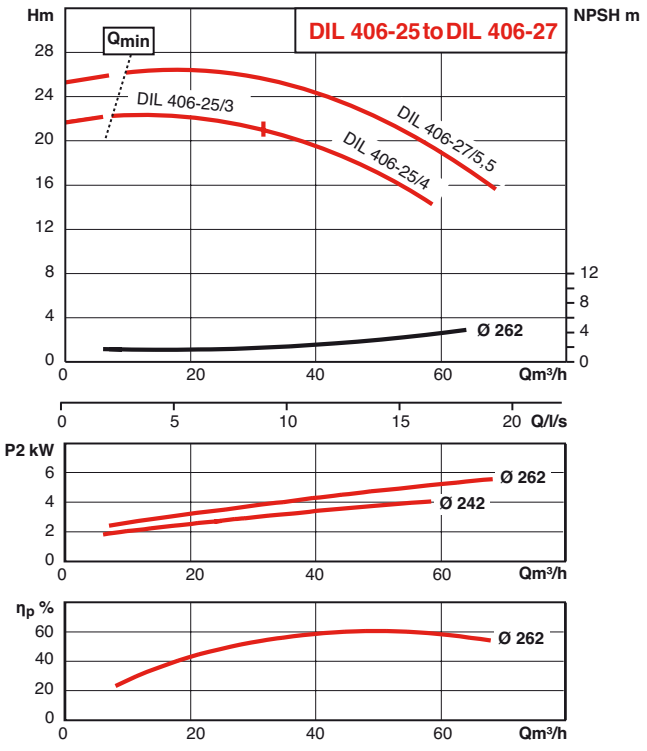

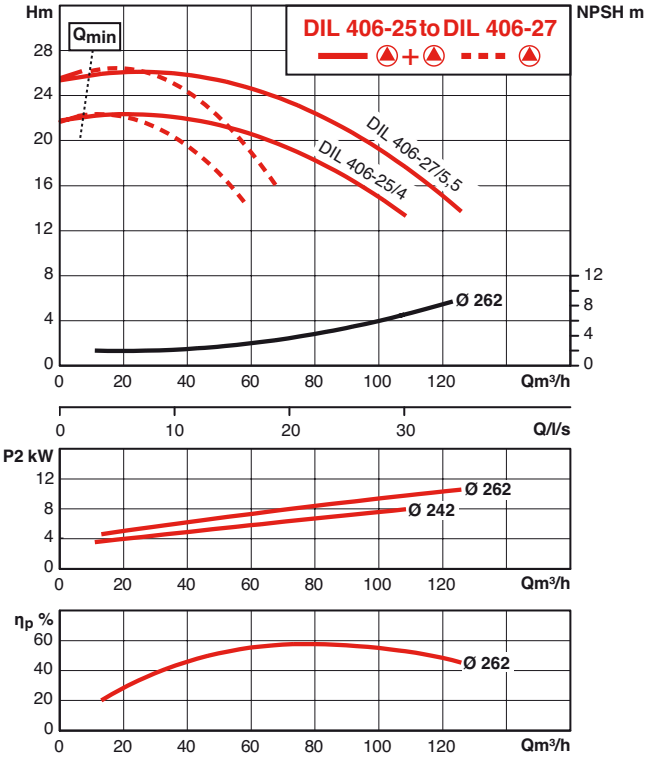

DIL

HYDRAULIC PERFORMANCES OF 4 POLE DIL

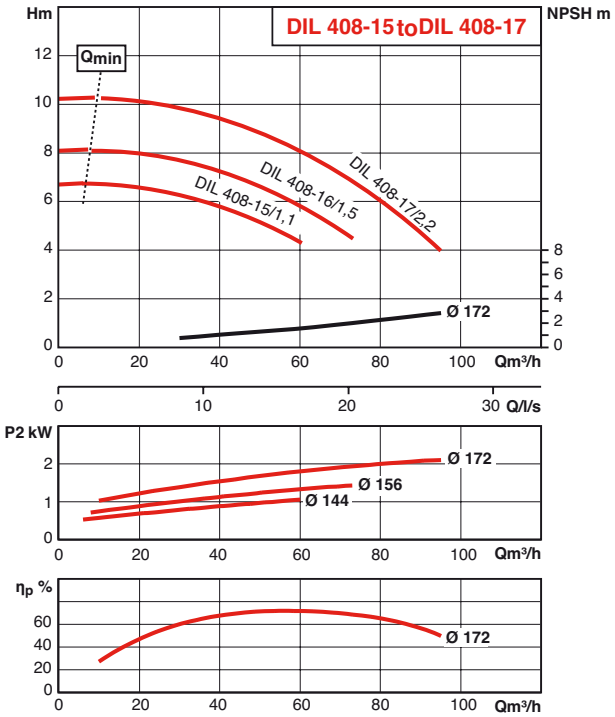

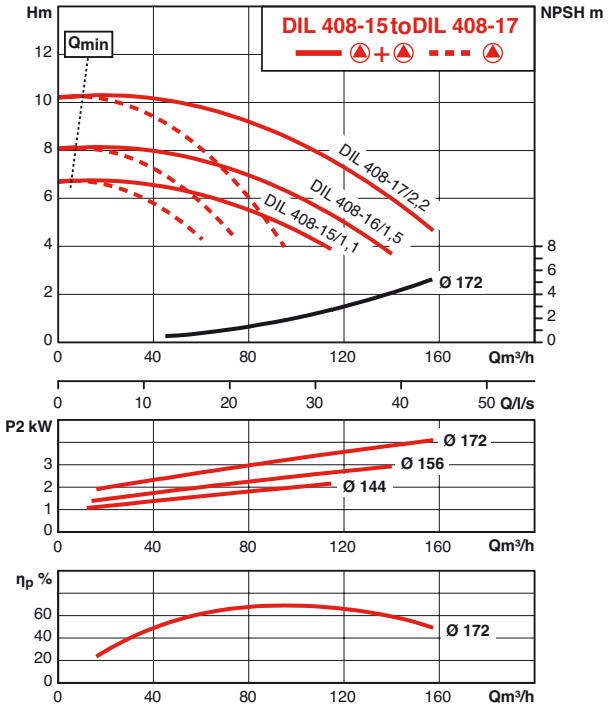

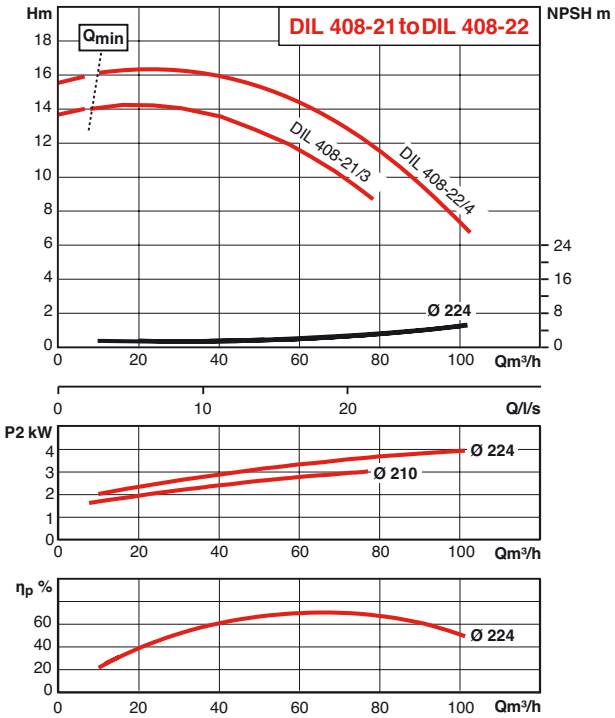

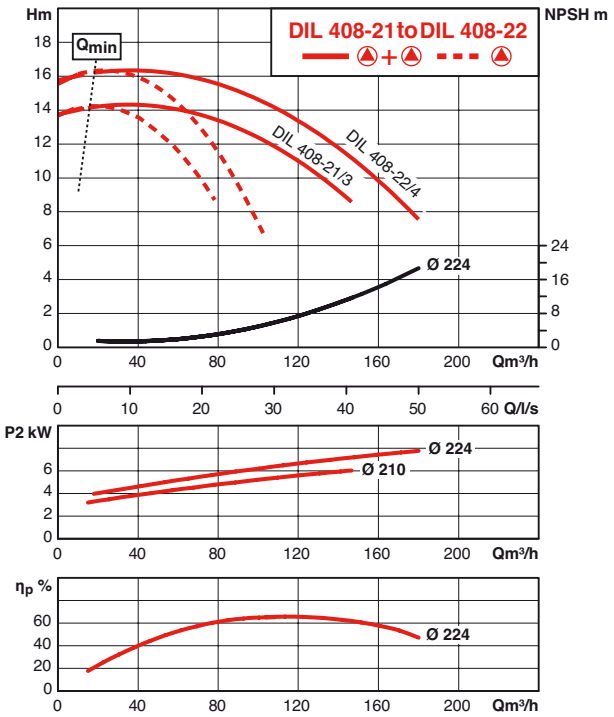

HYDRAULIC PERFORMANCES OF 4 POLE DIL

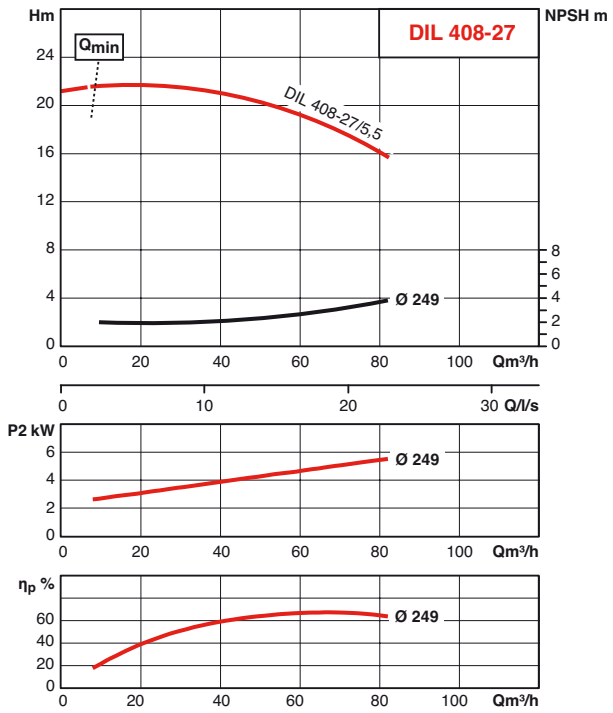

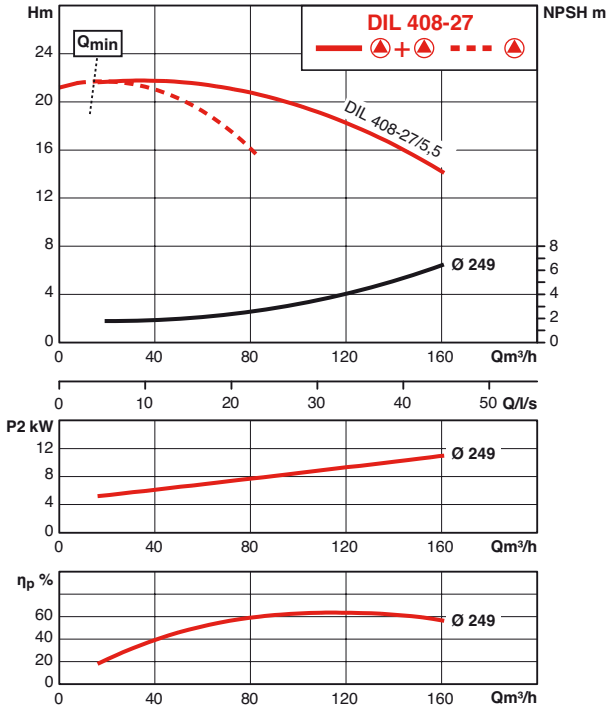

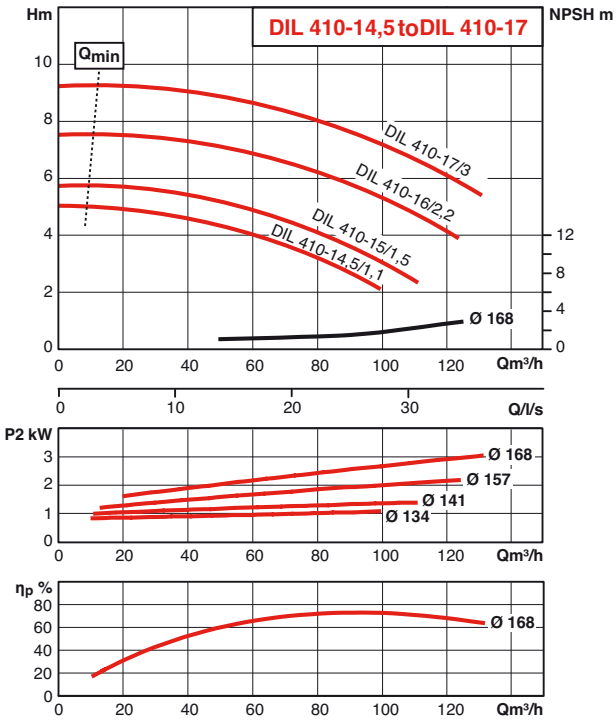

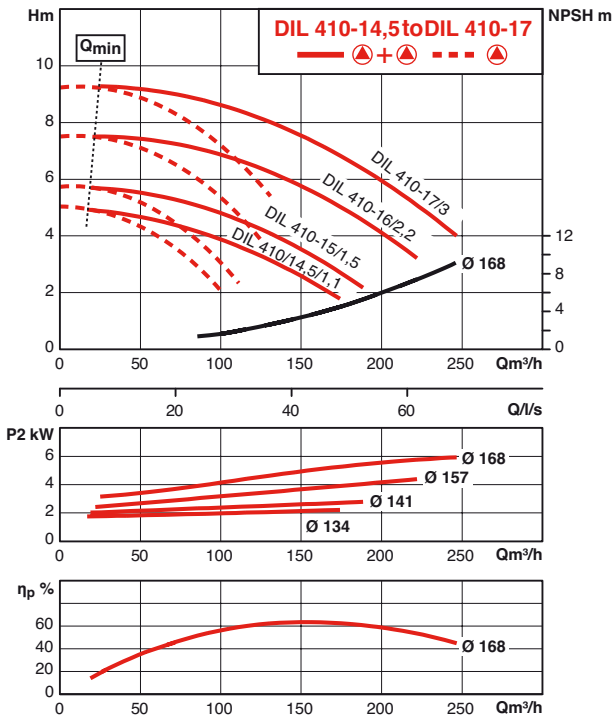

DIL

HYDRAULIC PERFORMANCES OF 4 POLE DIL

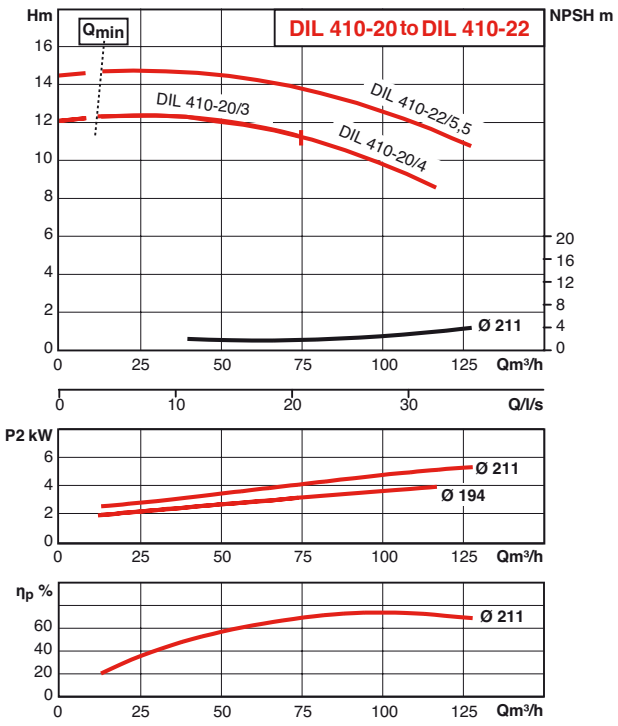

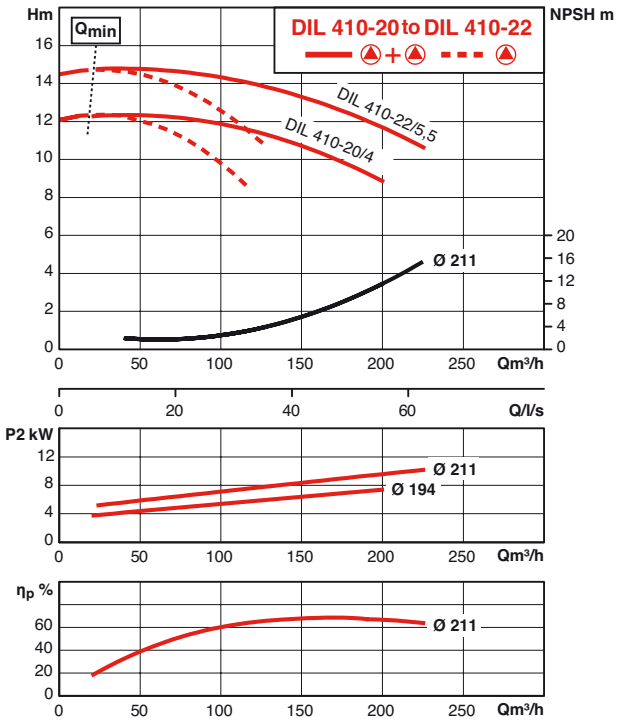

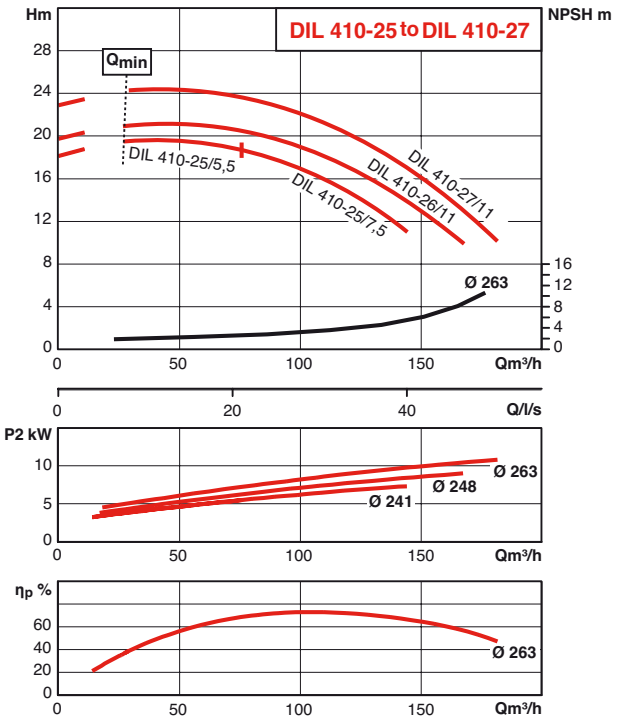

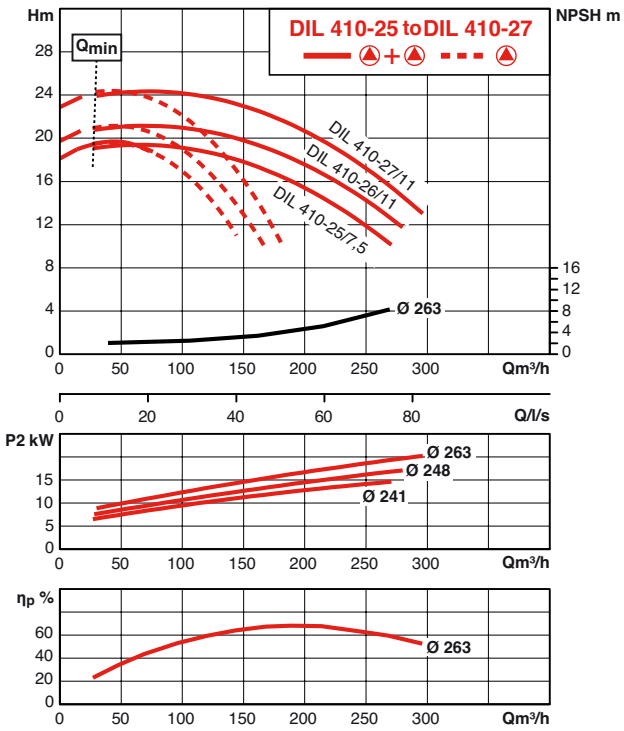

HYDRAULIC PERFORMANCES OF 4 POLE DIL

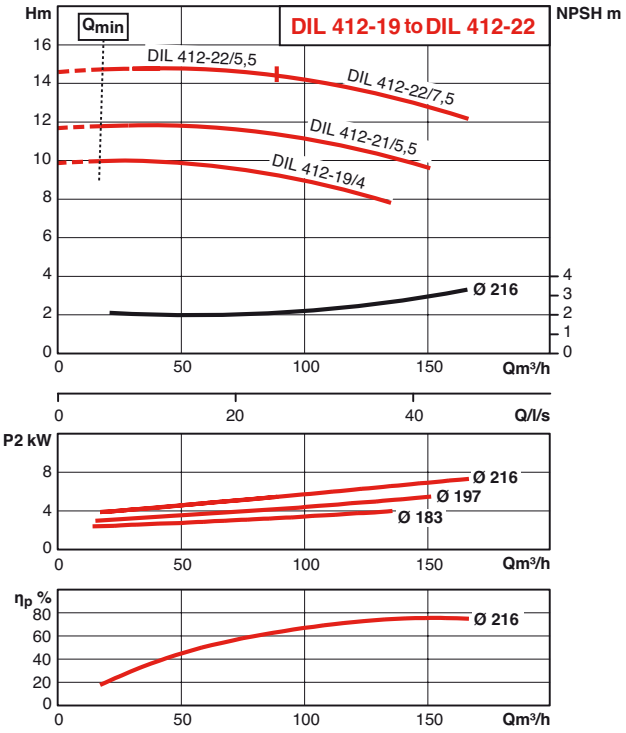

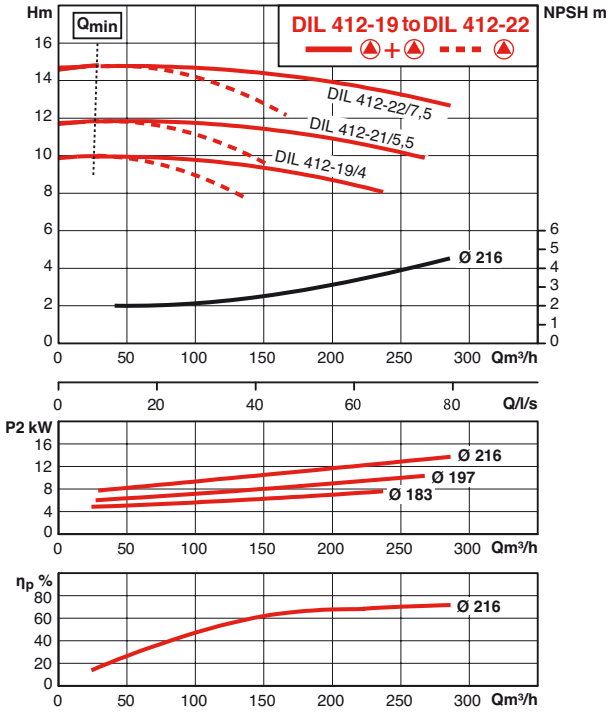

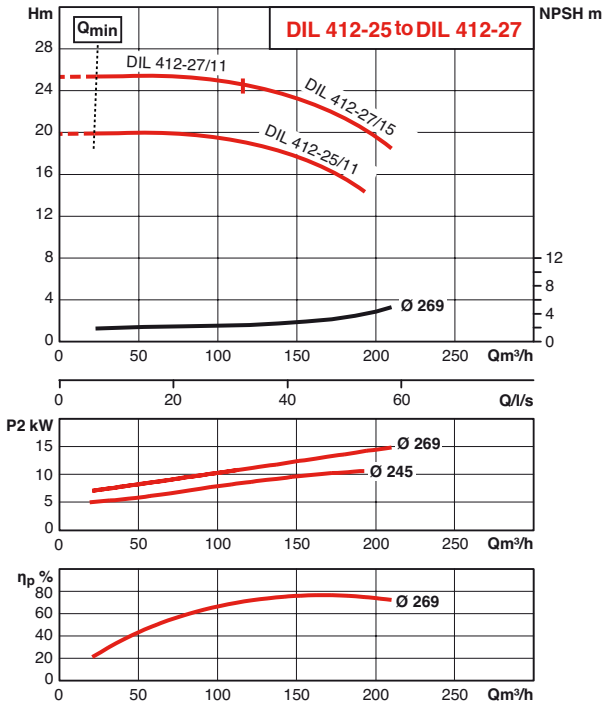

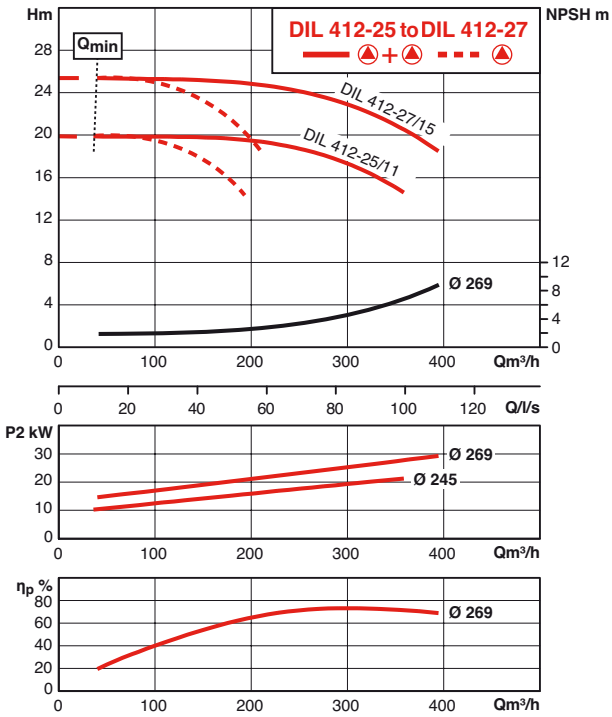

DIL

HYDRAULIC PERFORMANCES OF 4 POLE DIL

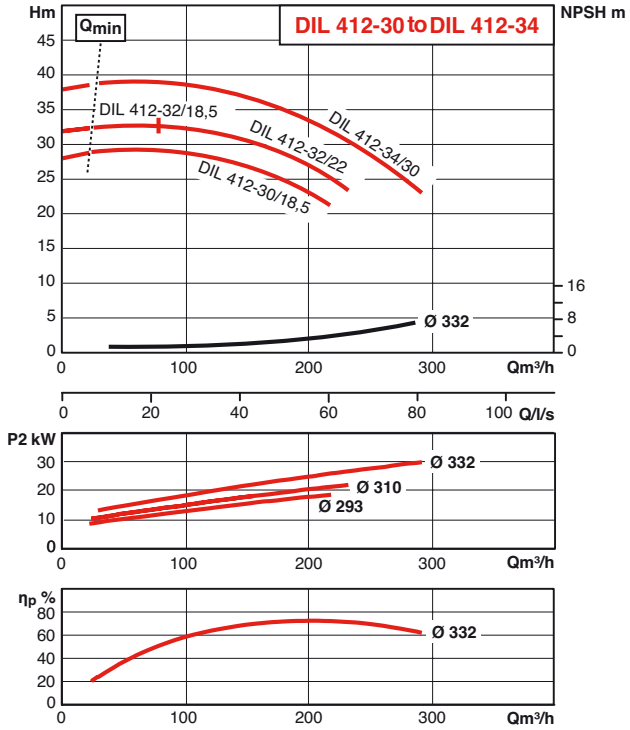

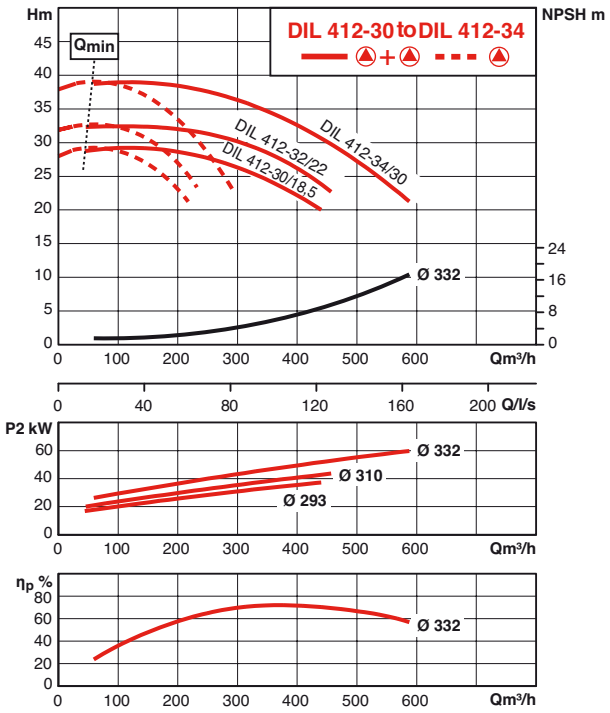

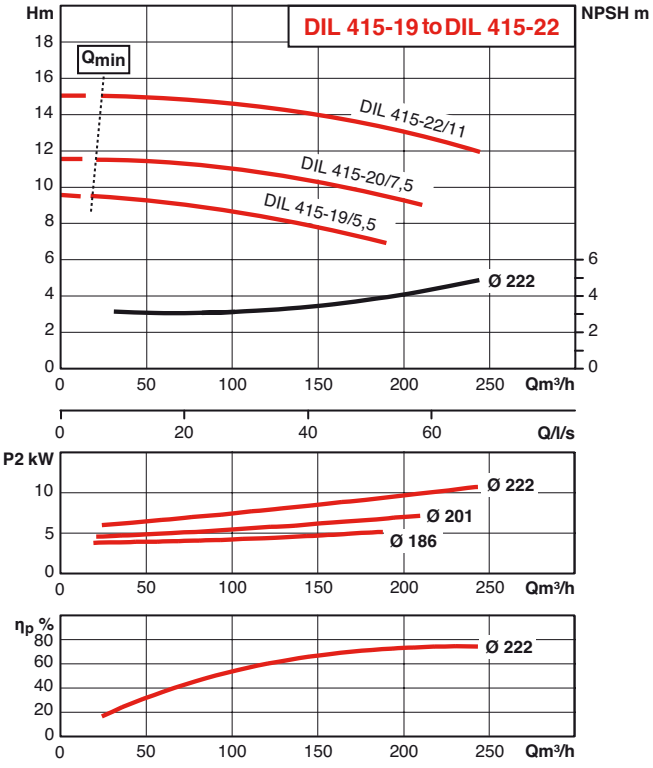

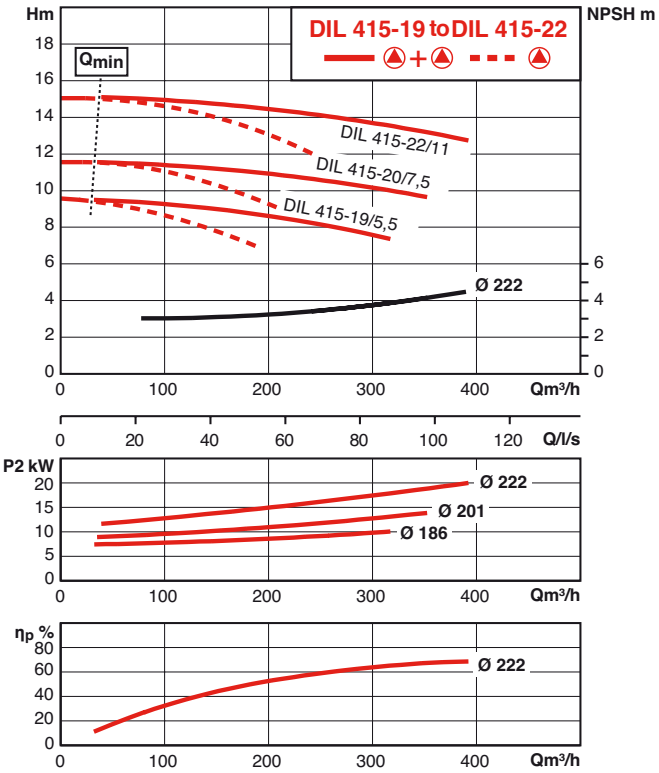

HYDRAULIC PERFORMANCES OF 4 POLE DIL

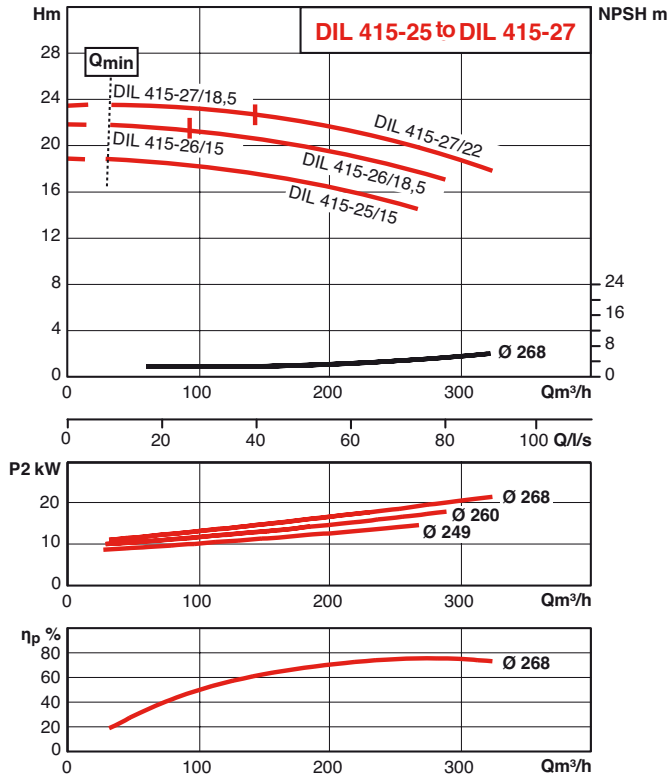

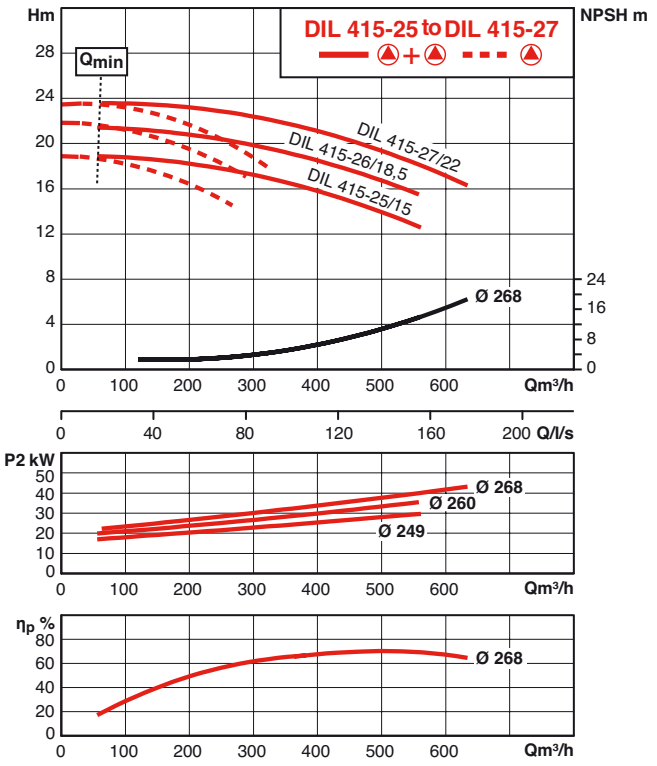

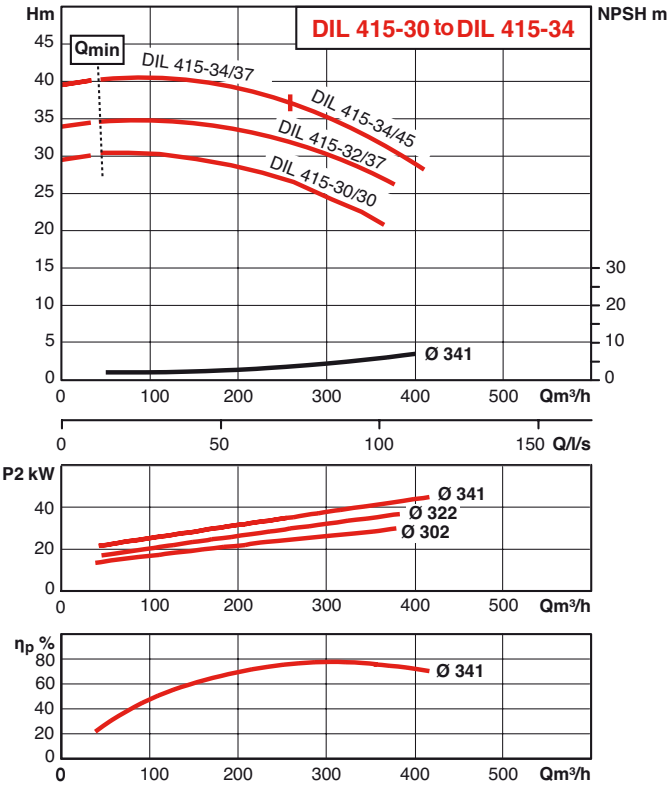

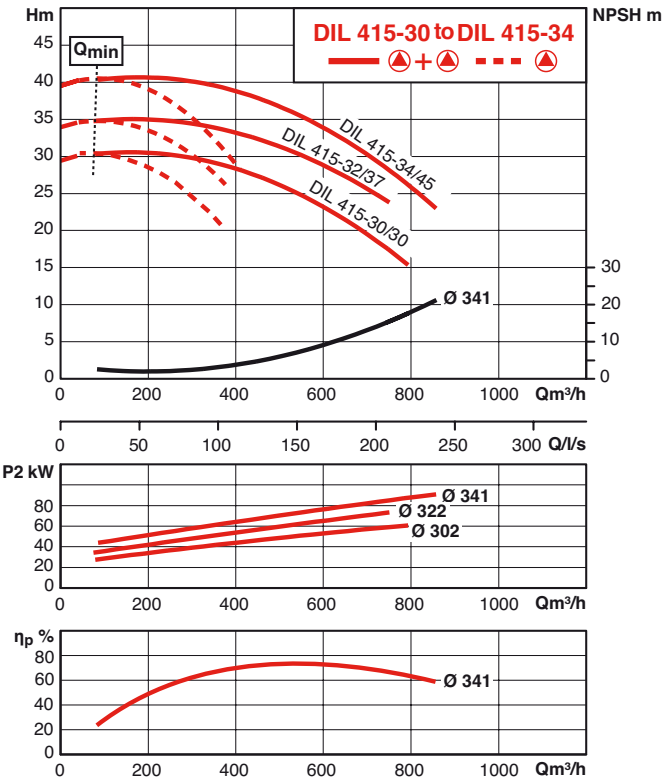

DIL

HYDRAULIC PERFORMANCES OF 4 POLE DIL

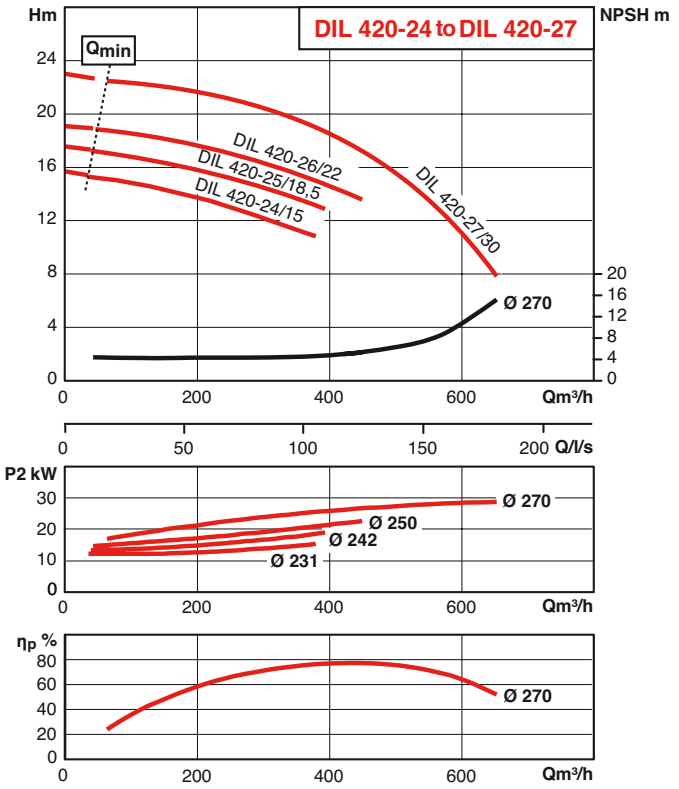

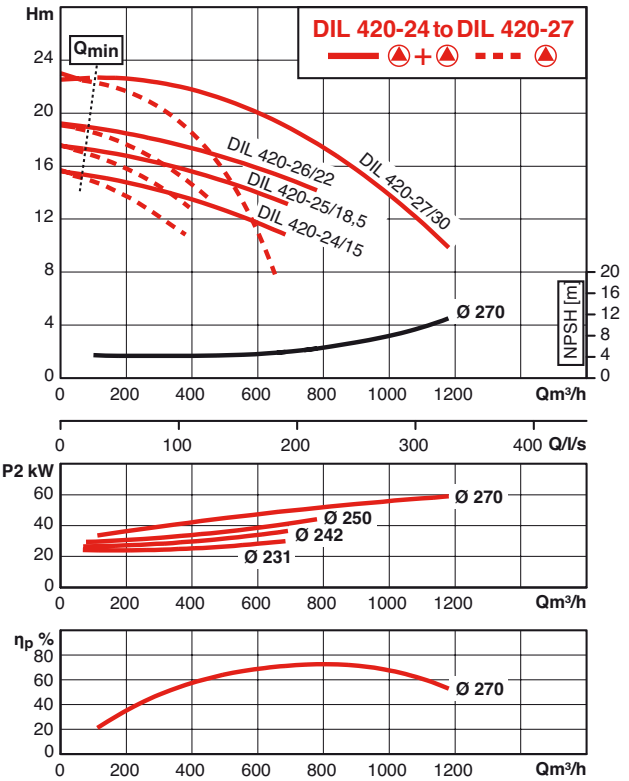

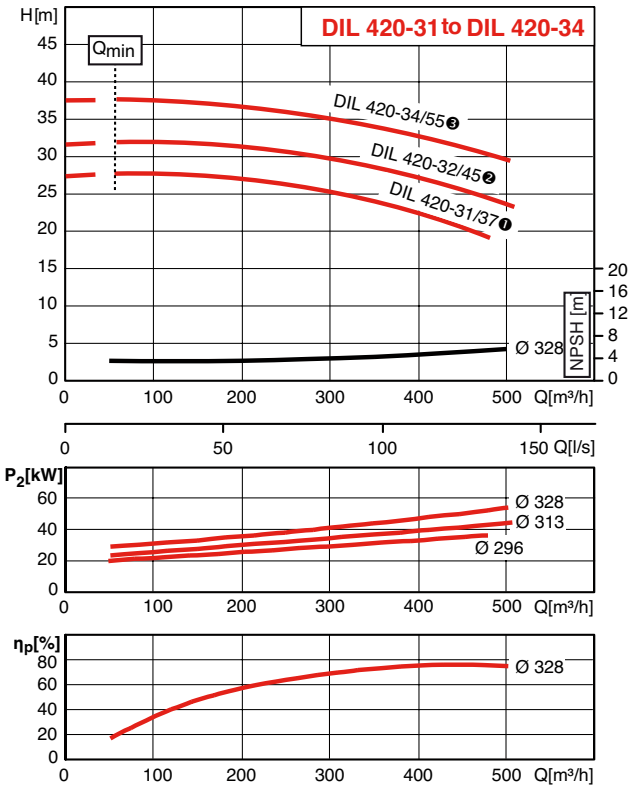

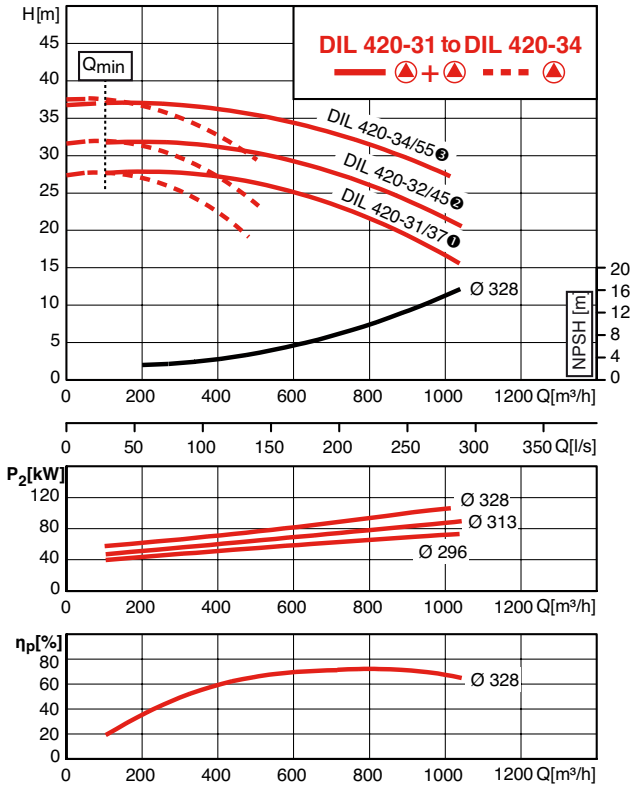

Available by the end of 2013, references to come : in place of ❶ : DIL 420-30/37 / in place of ❷ : DIL 420-31.5/37 / in place of ❸ : DIL 420-34.5/55.
New references : DIL 420-33.5/37 / DIL 420-33.5/45 / DIL 420-34.5/45

HYDRAULIC PERFORMANCES OF 2 POLE DIL

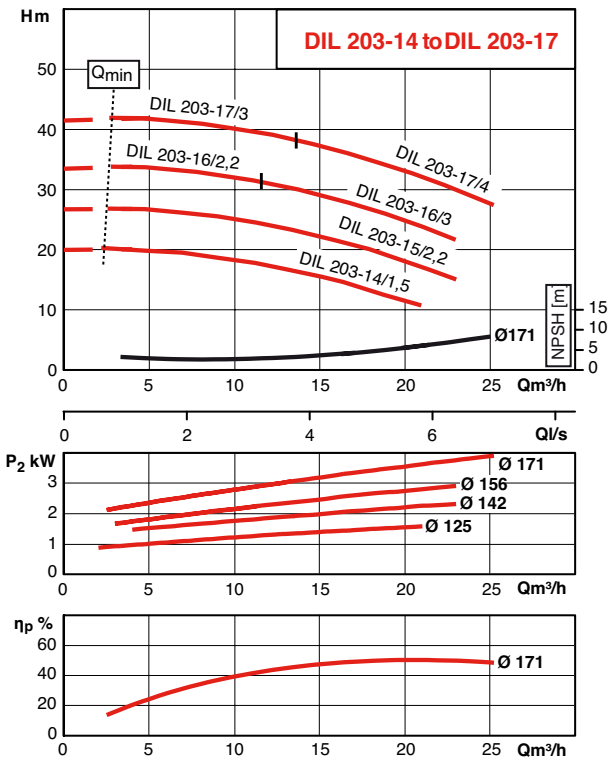

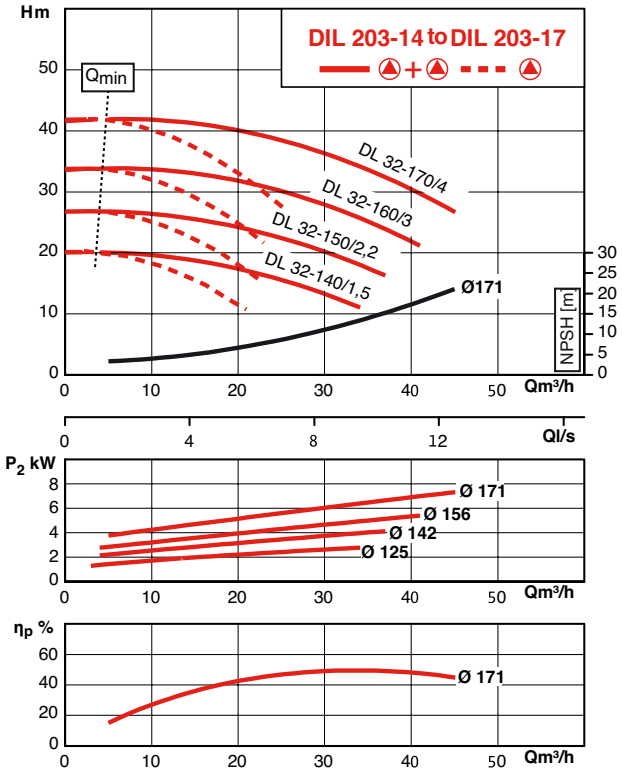

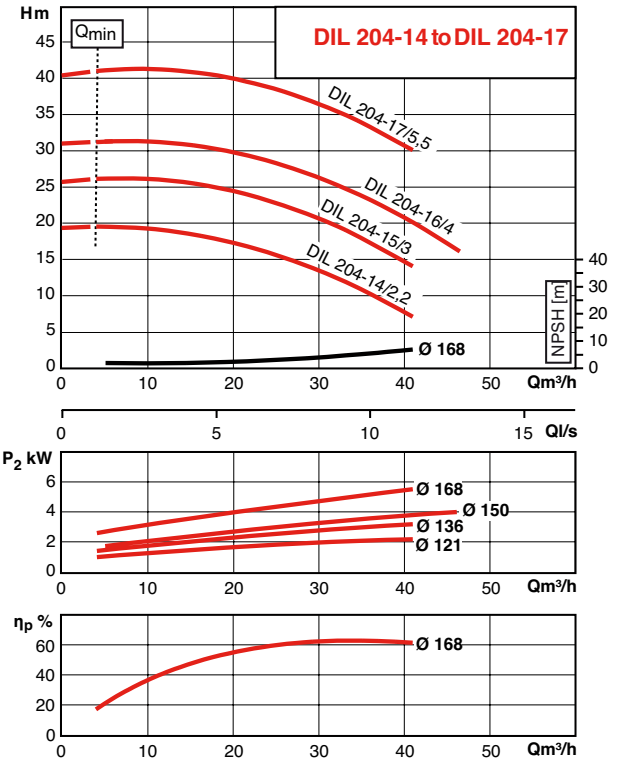

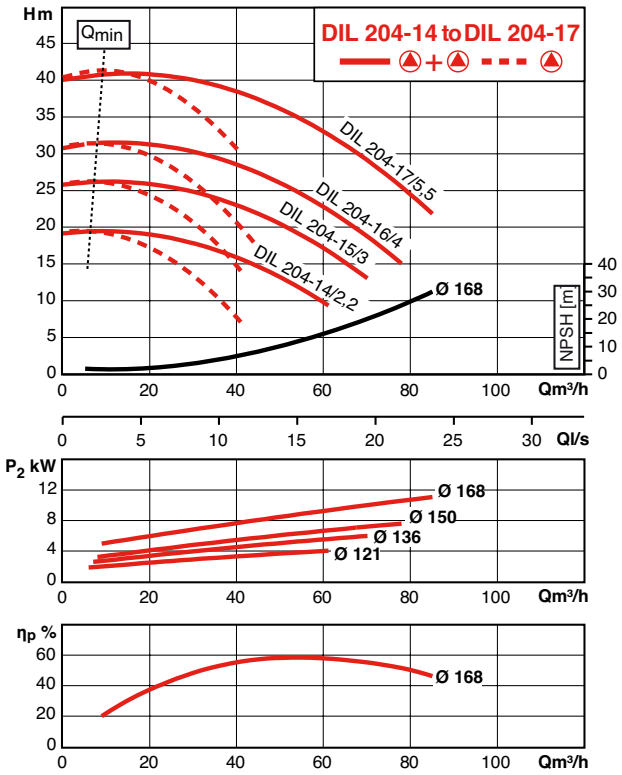

DIL

HYDRAULIC PERFORMANCES OF 2 POLE DIL

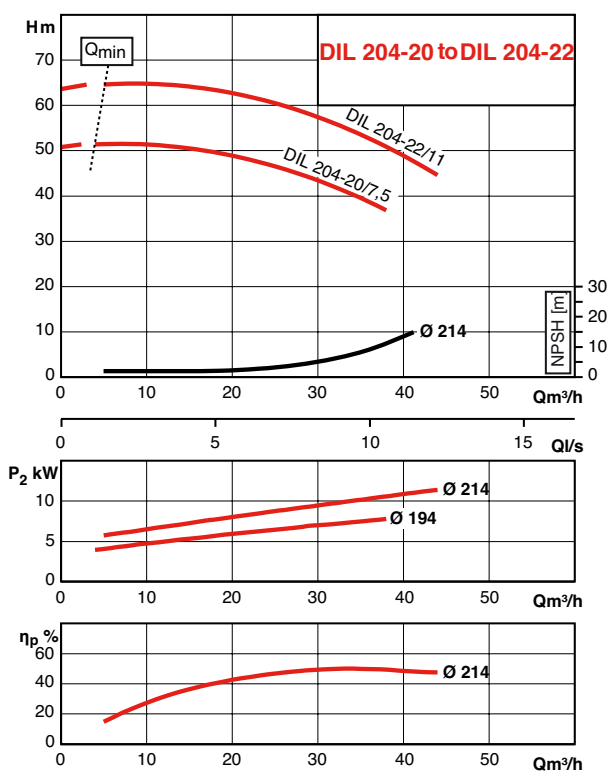

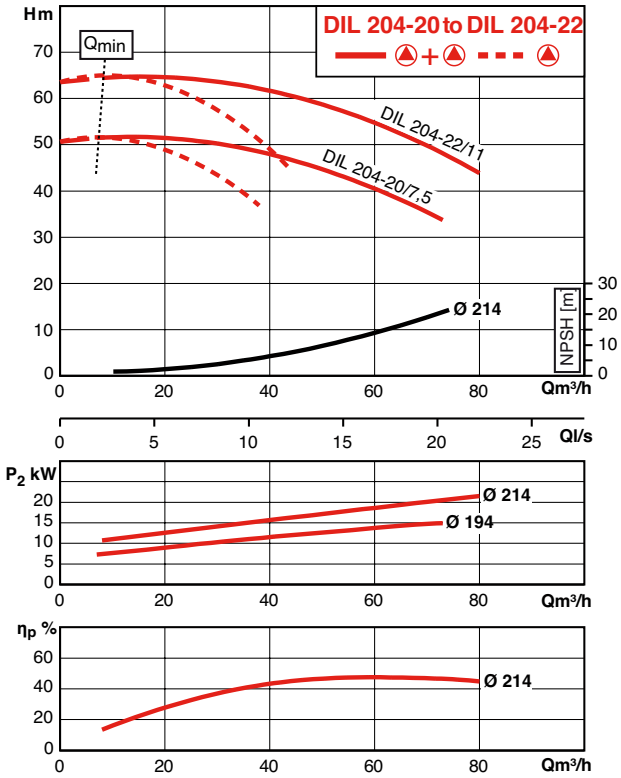

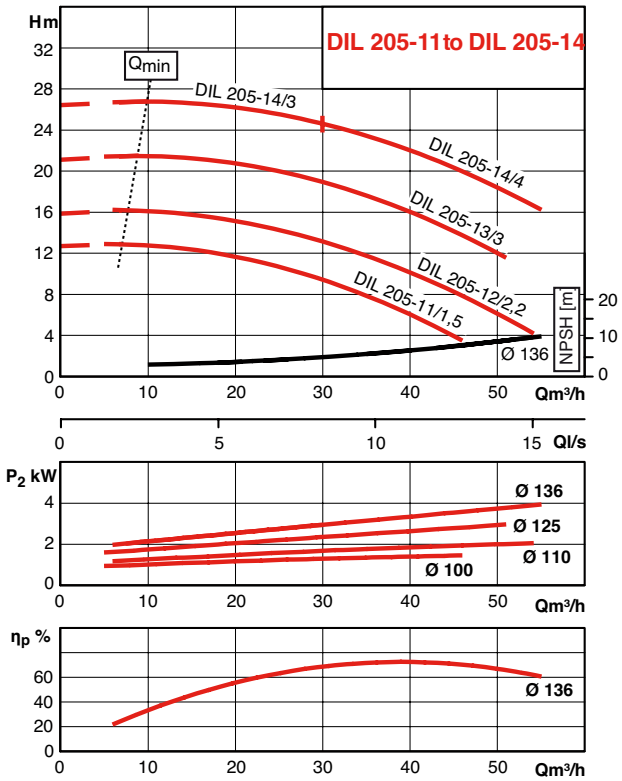

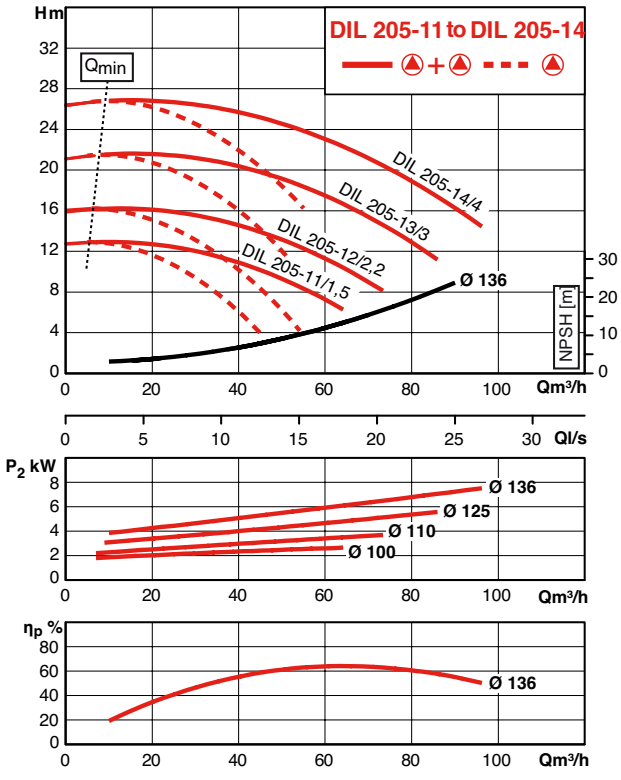

HYDRAULIC PERFORMANCES OF 2 POLE DIL

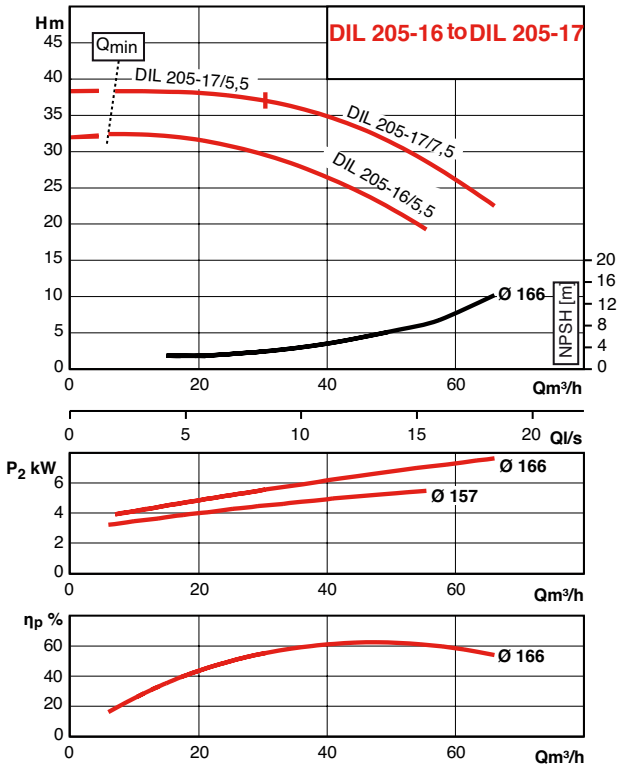

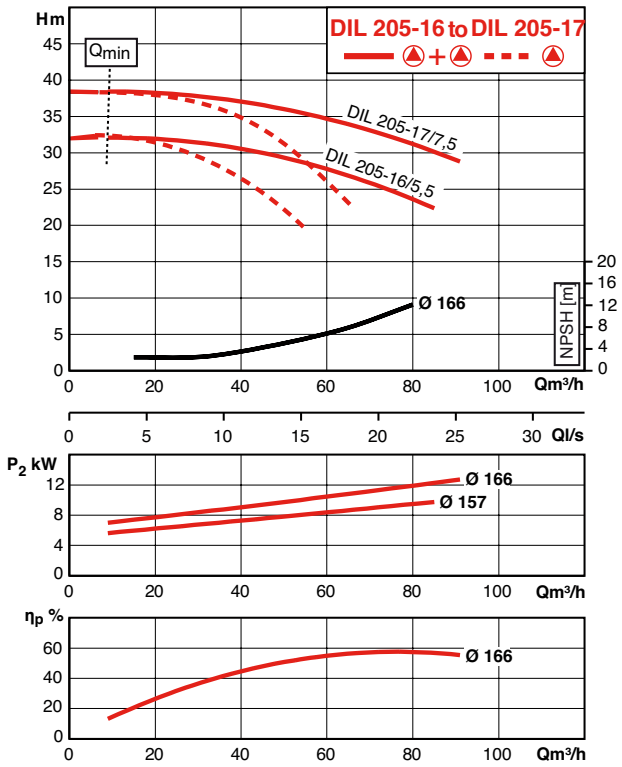

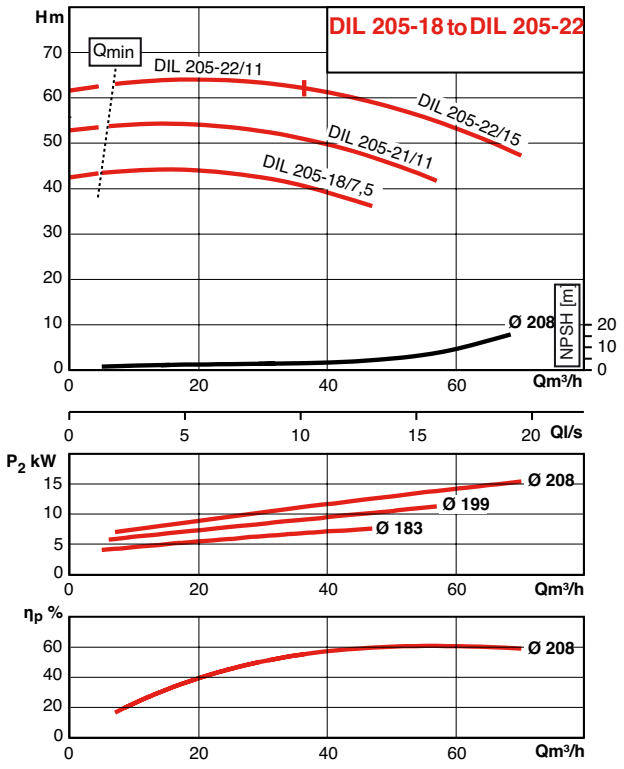

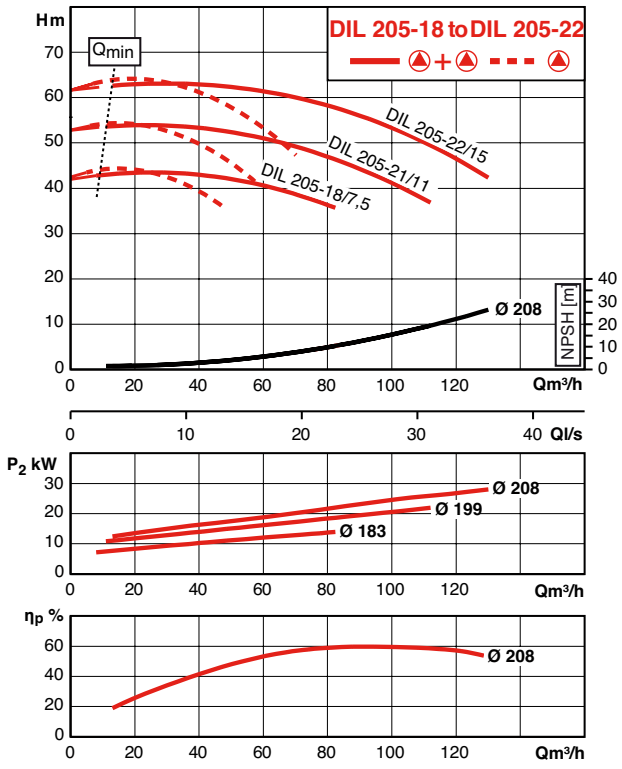

DIL

HYDRAULIC PERFORMANCES OF 2 POLE DIL

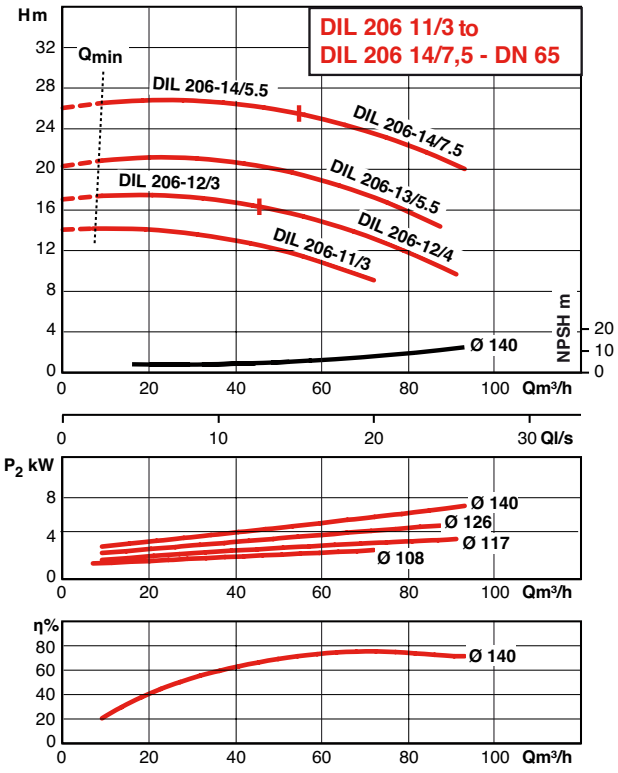

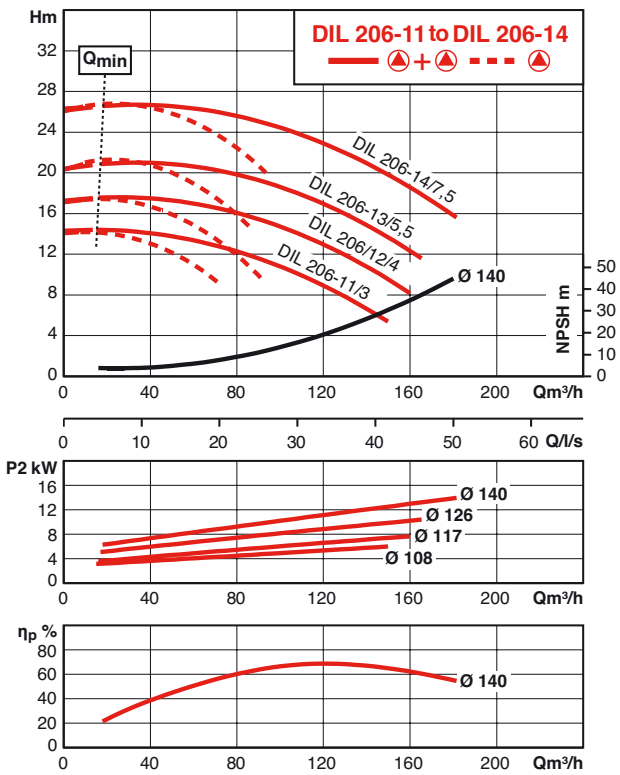

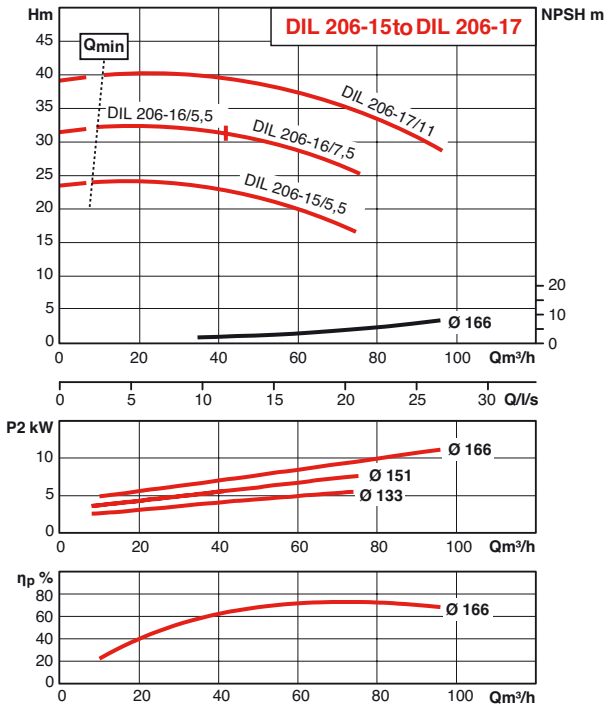

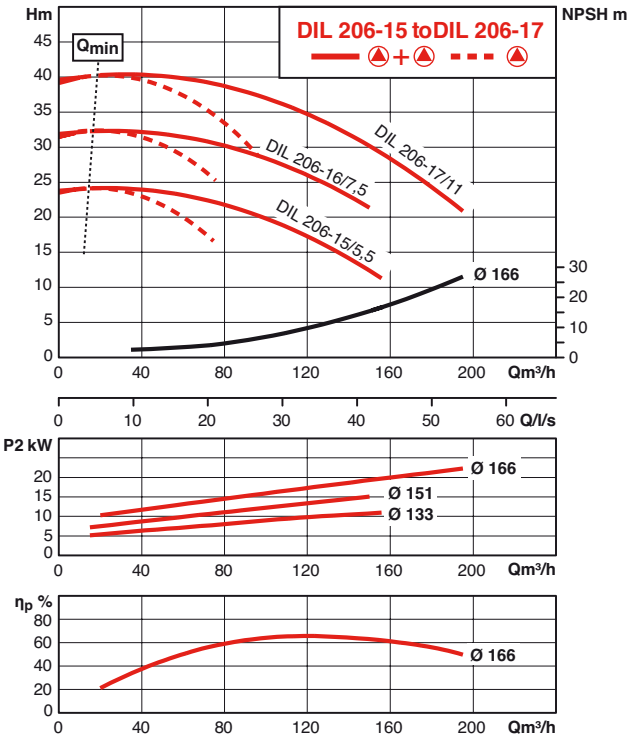

HYDRAULIC PERFORMANCES OF 2 POLE DIL

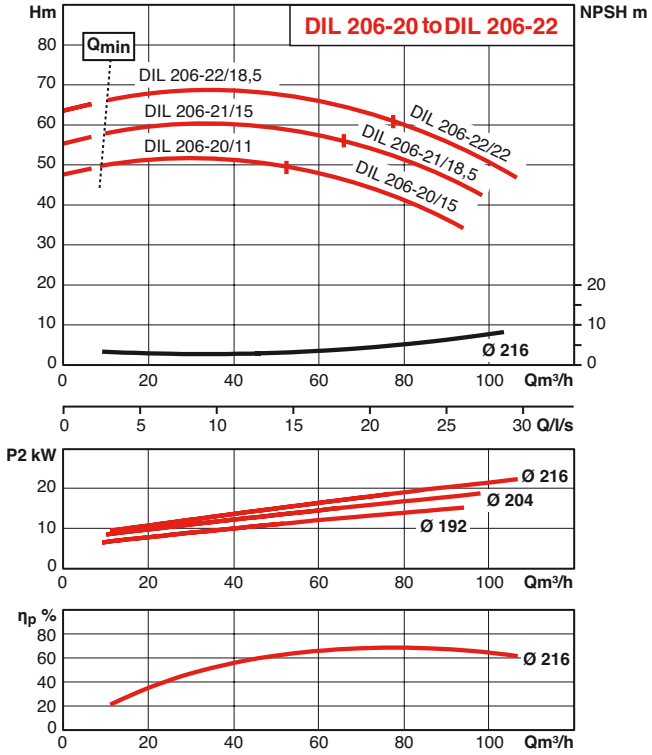

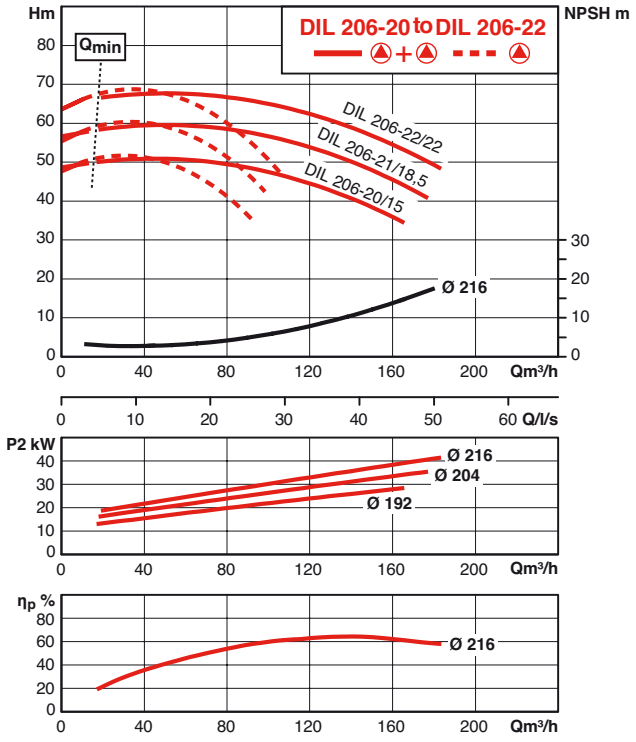

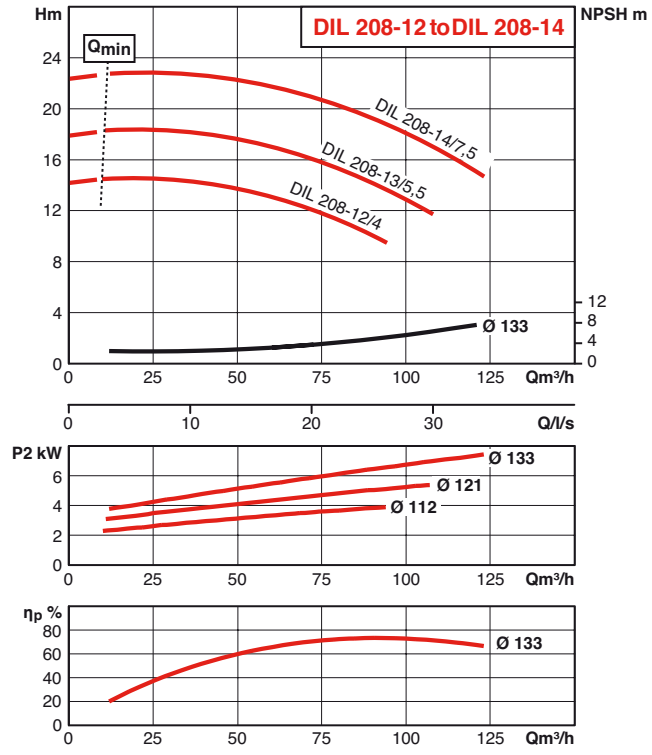

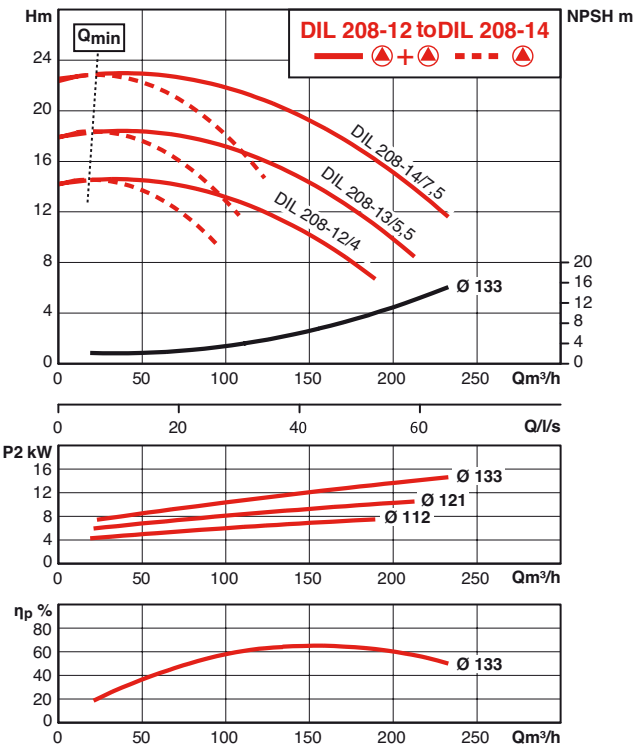

DIL

HYDRAULIC PERFORMANCES OF 2 POLE DIL

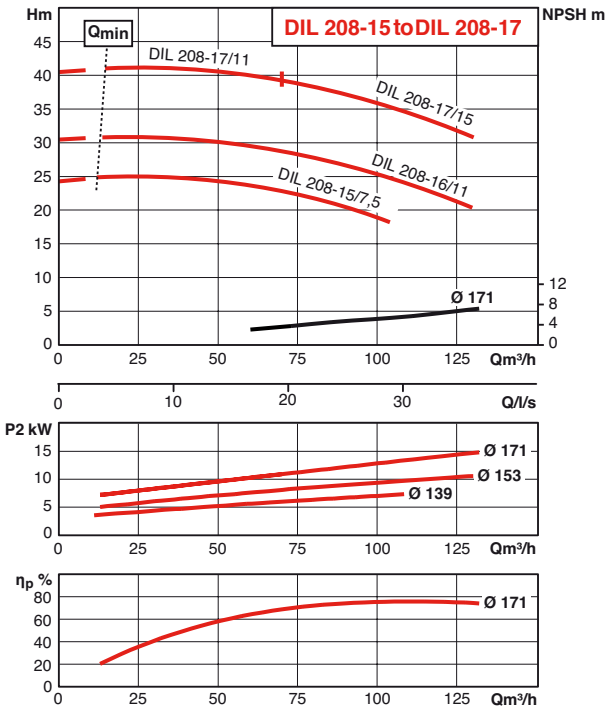

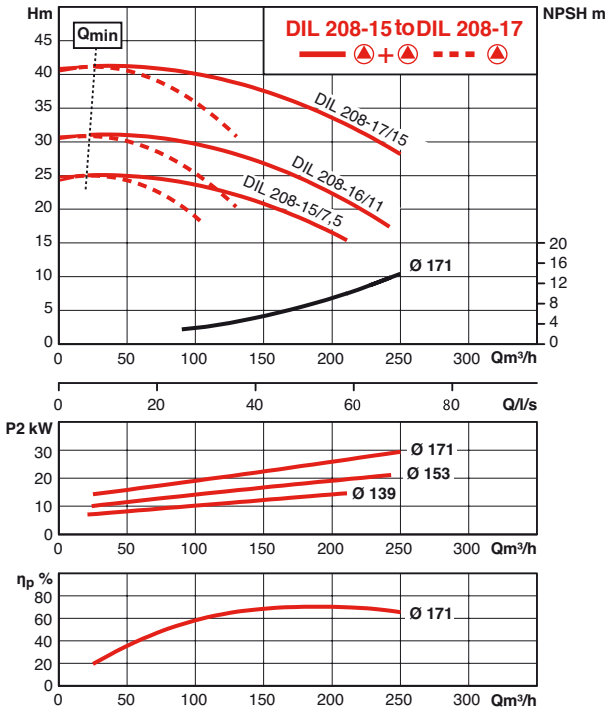

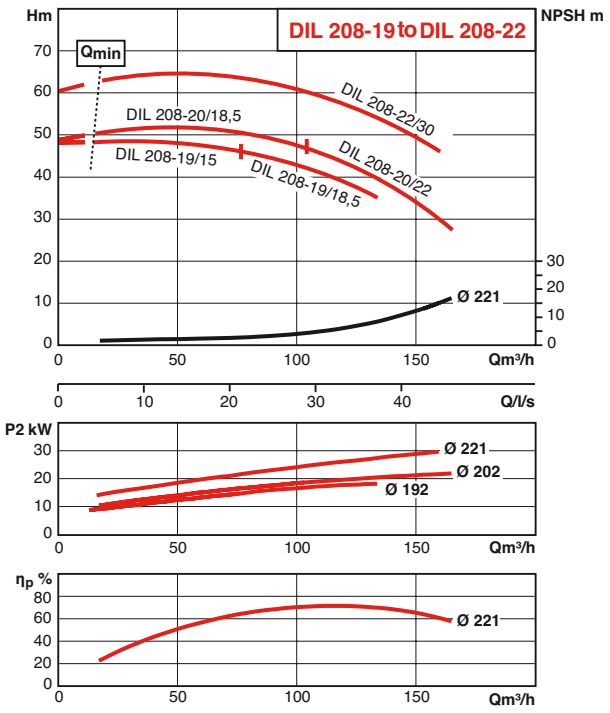

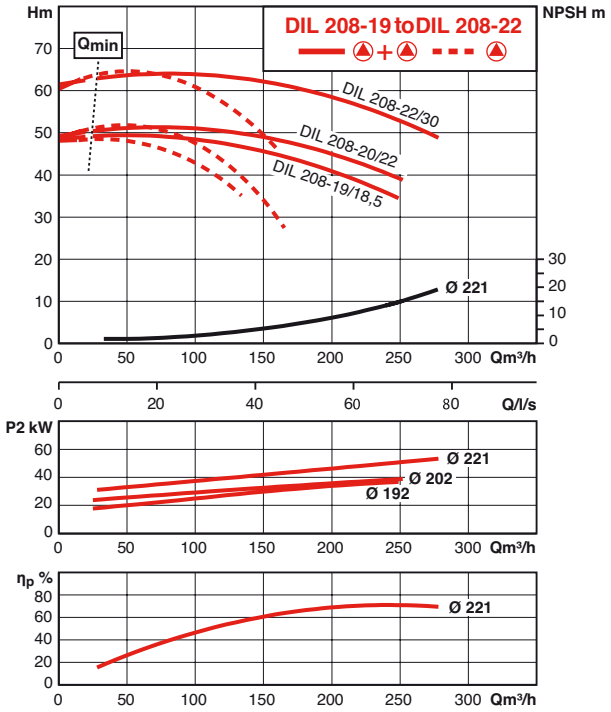

HYDRAULIC PERFORMANCES OF 2 POLE DIL

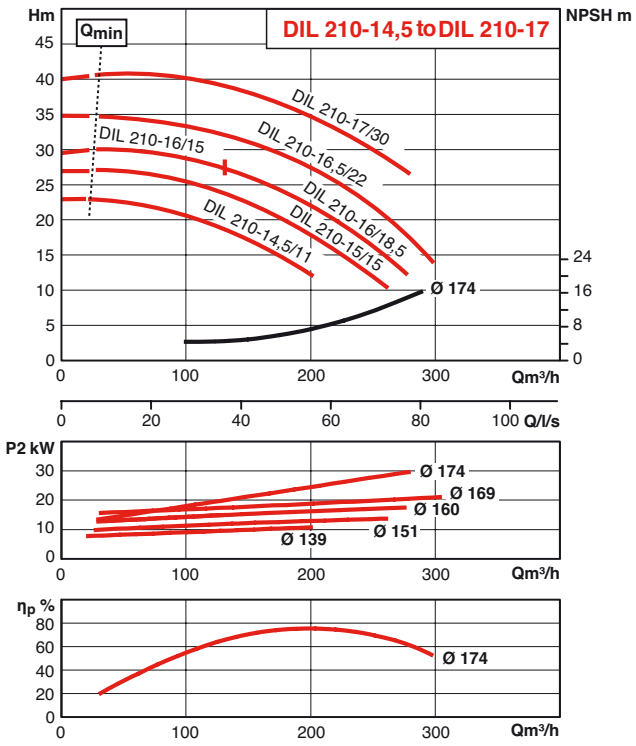

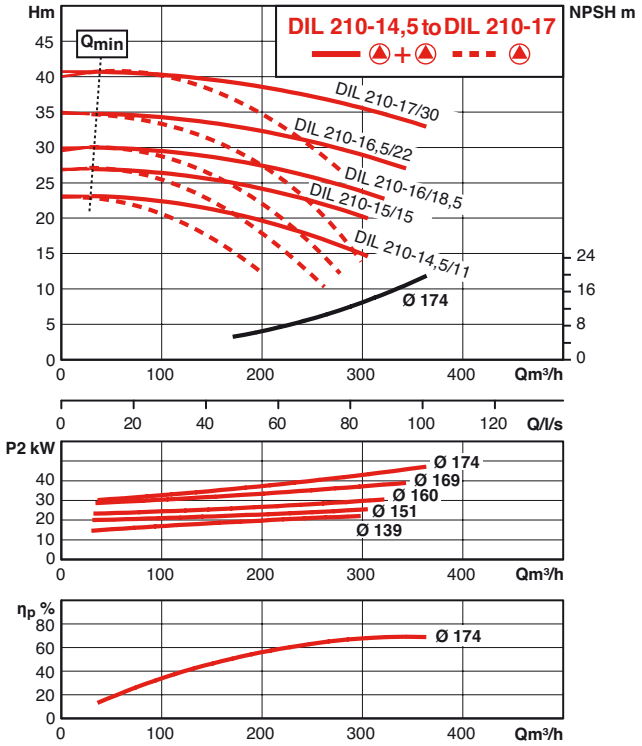

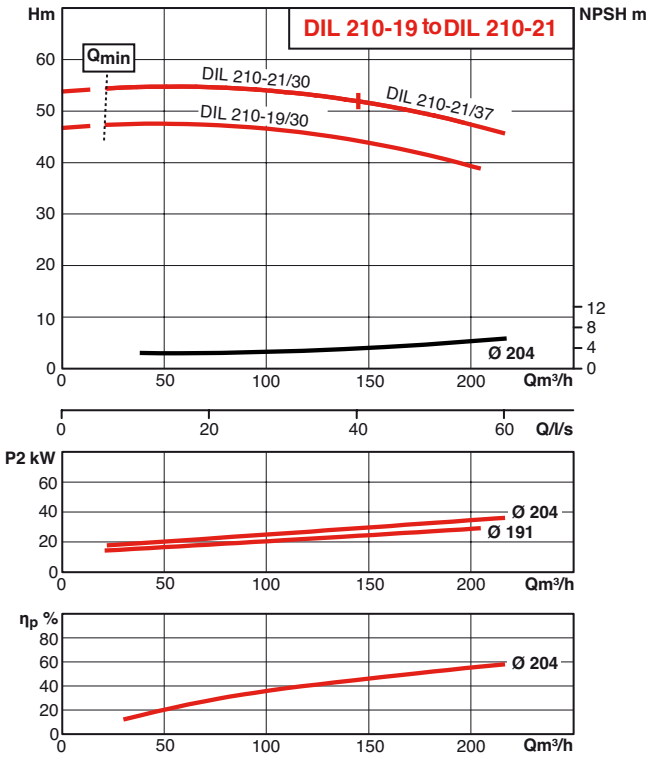

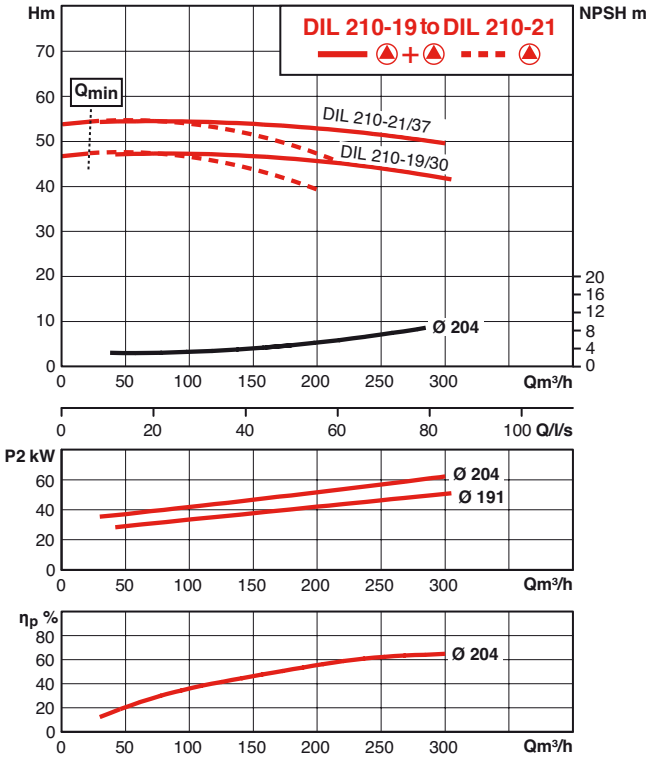

DIL

ELECTRICAL CHARACTERISTICS AND SIZES AT 1450 RPM

Table A

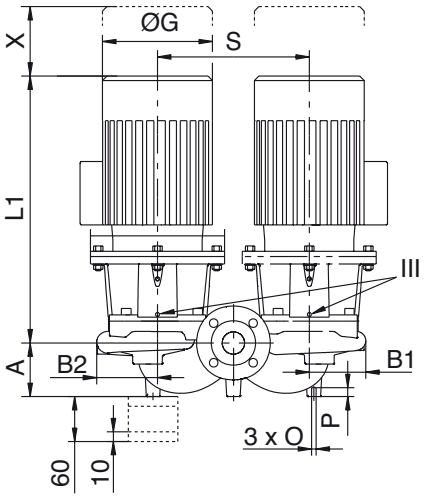

ØD	Øk	Ød	holes	holes
	mm	mm	mm	n x Ø
32	140	100	76	4 x 19
40	150	110	84	4 x 19
50	165	125	99	4 x 19
65	185	145	118	4 x 19
80	200	160	132	8 x 19

ØD	Øk	Ød	holes	holes
	mm	mm	mm	n x Ø
100	220	180	156	8 x 19
125	250	210	184	8 x 19
150	285	240	211	8 x 23
200	340	295	266	12 x 23

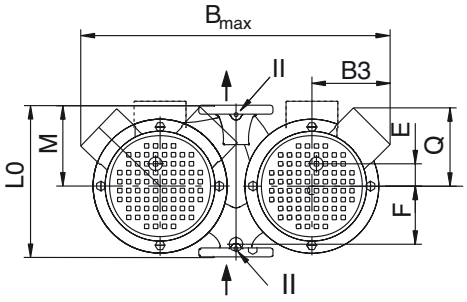

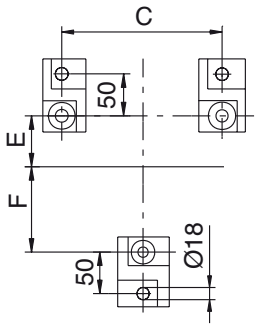

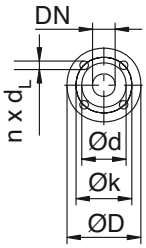

Product references	MOTOR					PUMP					
	Nominal power of the motor	Efficiency of motor %	Power factor	Speed of rotation	Nominal current (appx.)	DN	A	B max	B1	B2	B3
	P2	η	cos ϕ	rpm	in A						
	W						mm	mm	mm	mm	mm
DIL203-14/1.5	1500	81.3	78	1450 - 2900	3.3	32	100	588	117	122	144
DIL203-15/2.2	2200	83.2	82	1450 - 2900	4.4	32	100	588	117	122	144
DIL203-16/2.2	2200	83.2	82	1450 - 2900	4.4	32	100	588	117	122	144
DIL203-16/3	3000	84.6	84	1450 - 2900	5.8	32	100	600	117	122	150
DIL203-17/3	3000	84.6	84	1450 - 2900	5.8	32	100	600	117	122	150
DIL203-17/4	4000	85.8	84	1450 - 2900	7.7	32	100	612	117	122	156
DIL204-14/2.2	2200	83.2	82	1450 - 2900	4.4	40	100	628	120	127	144
DIL204-15/3	3000	84.6	84	1450 - 2900	5.8	40	100	640	120	127	150
DIL204-16/4	4000	85.8	84	1450 - 2900	7.7	40	100	652	120	127	156
DIL204-17/5.5	5500	87	87	1450 - 2900	10.2	40	100	692	120	127	176
DIL204-20/7.5	7500	88.1	86	1450 - 2900	13.7	40	110	700	145	147	-
DIL204-22/11	11000	89.4	87	1450 - 2900	22	40	110	750	145	147	-
DIL205-11/1.5	1500	81.3	78	1450 - 2900	3.3	50	105	588	108	116	144
DIL205-12/2.2	2200	83.2	82	1450 - 2900	4.4	50	105	588	108	116	144
DIL205-13/3	3000	84.6	84	1450 - 2900	5.8	50	105	600	108	116	150
DIL205-14/3	3000	84.6	84	1450 - 2900	5.8	50	105	600	108	116	150
DIL205-14/4	4000	85.8	84	1450 - 2900	7.7	50	105	612	108	116	156
DIL205-16/5.5	5500	87	87	1450 - 2900	10.2	50	120	692	126	136	176
DIL205-17/5.5	5500	87	87	1450 - 2900	10.2	50	120	692	126	136	176
DIL205-17/7.5	7500	88.1	86	1450 - 2900	13.7	50	120	692	126	136	176
DIL205-18/7.5	7500	88.1	86	1450 - 2900	13.7	50	120	700	145	148	-
DIL205-21/11	11000	89.4	87	1450 - 2900	22	50	120	750	145	148	-
DIL205-22/11	11000	89.4	87	1450 - 2900	22	50	120	750	145	148	-
DIL205-22/15	15000	90.3	84	1450 - 2900	28.5	50	120	750	145	148	-
DIL206-11/3	3000	84.6	84	1450 - 2900	5.8	65	120	640	121	130	150
DIL206-12/3	3000	84.6	84	1450 - 2900	5.8	65	120	640	121	130	150
DIL206-12/4	4000	85.8	84	1450 - 2900	7.7	65	120	652	121	130	156
DIL206-13/5.5	5500	87	87	1450 - 2900	10.2	65	120	640	121	130	-
DIL206-14/5.5	5500	87	87	1450 - 2900	10.2	65	120	640	121	130	-
DIL206-14/7.5	7500	88.1	86	1450 - 2900	13.7	65	120	640	121	130	-
DIL206-15/5.5	5500	87	87	1450 - 2900	10.2	65	153	752	134	144	176
DIL206-16/5.5	5500	87	87	1450 - 2900	10.2	65	153	752	134	144	176
DIL206-16/7.5	7500	88.1	86	1450 - 2900	13.7	65	153	752	134	144	176
DIL206-17/11	11000	89.4	87	1450 - 2900	22	65	153	750	134	144	-
DIL206-20/11	11000	89.4	87	1450 - 2900	22	65	140	750	157	166	-
DIL206-20/15	15000	90.3	84	1450 - 2900	28.5	65	140	750	157	166	-
DIL206-21/15	15000	90.3	84	1450 - 2900	28.5	65	140	750	157	166	-

ELECTRICAL CHARACTERISTICS AND SIZES AT 1450 RPM

Table B

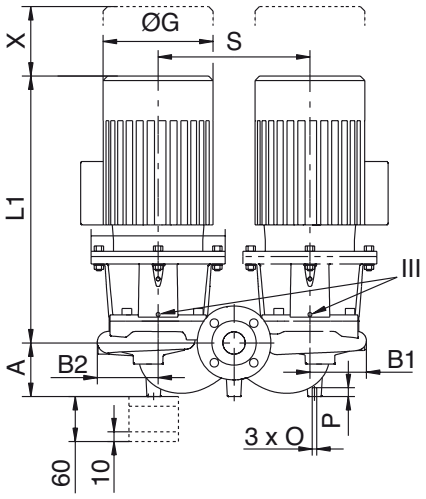

ØD	Øk	Ød	holes	holes
	mm	mm	mm	n x Ø
32	140	100	76	4 x 19
40	150	110	84	4 x 19
50	165	125	99	4 x 19
65	185	145	118	4 x 19
80	200	160	132	8 x 19

ØD	Øk	Ød	holes	holes
	mm	mm	mm	n x Ø
100	220	180	156	8 x 19
125	250	210	184	8 x 19
150	285	240	211	8 x 23
200	340	295	266	12 x 23

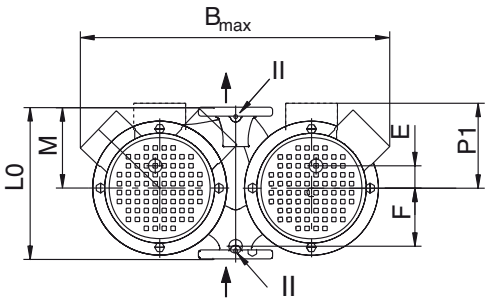

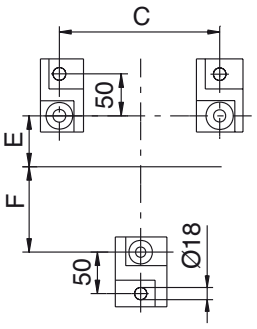

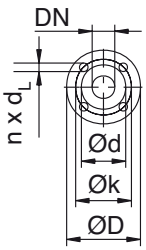

Product reference	PUMP Q	P1	L0	L1	C	E	F	M	O	P	S	X	ØG	mass	Table
	mm	mm	mm	mm	mm	mm	mm	mm	mm	mm	mm	mm	mm	kg	
DIL203-14/1.5	144	-	320	446	360	43	137	155	M10	20	300	90	193	98	A
DIL203-15/2.2	144	-	320	473	360	43	137	155	M10	20	300	90	193	99	A
DIL203-16/2.2	144	-	320	473	360	43	137	155	M10	20	300	90	193	99	A
DIL203-16/3	150	-	320	528	360	43	137	155	M10	20	300	90	217	118	A
DIL203-17/3	150	-	320	528	360	43	137	155	M10	20	300	90	217	118	A
DIL203-17/4	156	-	320	552	360	43	137	155	M10	20	300	90	232	137	A
DIL204-14/2.2	144	-	340	477	400	52	145	170	M10	20	340	95	193	100	A
DIL204-15/3	150	-	340	532	400	52	145	170	M10	20	340	95	217	119	A
DIL204-16/4	156	-	340	556	400	52	145	170	M10	20	340	95	232	139	A
DIL204-17/5.5	176	-	340	601	400	52	145	170	M10	20	340	95	279	170	A
DIL204-20/7.5	-	188	440	620	500	38	192	220	M10	20	400	100	279	206	B
DIL204-22/11	-	250	440	767	500	38	192	220	M10	20	400	100	320	271	B
DIL205-11/1.5	144	-	340	449	360	52	148	170	M10	20	300	100	193	94	A
DIL205-12/2.2	144	-	340	476	360	52	148	170	M10	20	300	100	193	93	A
DIL205-13/3	150	-	340	535	360	52	148	170	M10	20	300	100	217	116	A
DIL205-14/3	150	-	340	535	360	52	148	170	M10	20	300	100	217	113	A
DIL205-14/4	156	-	340	559	360	52	148	170	M10	20	300	100	232	133	A
DIL205-16/5.5	176	-	340	598	360	50	130	180	M10	20	340	100	279	172	A
DIL205-17/5.5	176	-	340	598	360	50	130	180	M10	20	340	100	279	172	A
DIL205-17/7.5	176	-	340	604	360	50	130	180	M10	20	340	100	279	187	A
DIL205-18/7.5	-	188	440	626	500	50	200	220	M10	20	400	100	279	215	B
DIL205-21/11	-	250	440	773	500	50	200	220	M10	20	400	100	320	276	B
DIL205-22/11	-	250	440	773	500	50	200	220	M10	20	400	100	320	276	B
DIL205-22/15	-	250	440	773	500	50	200	220	M10	20	400	100	320	291	B
DIL206-11/3	150	-	340	539	400	50	150	170	M12	20	340	110	217	121	A
DIL206-12/3	150	-	340	539	400	50	150	170	M12	20	340	110	217	121	A
DIL206-12/4	156	-	340	563	400	50	150	170	M12	20	340	110	232	140	A
DIL206-13/5.5	-	188	340	614	400	50	150	170	M12	20	340	110	279	178	B
DIL206-14/5.5	-	188	340	614	400	50	150	170	M12	20	340	110	279	169	B
DIL206-14/7.5	-	188	340	620	400	50	150	170	M12	20	340	110	279	184	B
DIL206-15/5.5	176	-	430	617	440	55	185	215	M12	20	400	120	279	190	A
DIL206-16/5.5	176	-	430	617	440	55	185	215	M12	20	400	120	279	190	A
DIL206-16/7.5	176	-	430	623	440	55	185	215	M12	20	400	120	279	205	A
DIL206-17/11	-	250	430	778	440	55	185	215	M12	20	400	120	320	190	B
DIL206-20/11	-	250	475	783	520	45	210	245	M12	20	400	110	320	289	B
DIL206-20/15	-	250	475	783	520	45	210	245	M12	20	400	110	320	303	B
DIL206-21/15	-	250	475	783	520	45	210	245	M12	20	400	110	320	303	B

DIL

ELECTRICAL CHARACTERISTICS AND SIZES AT 1450 RPM

Table A

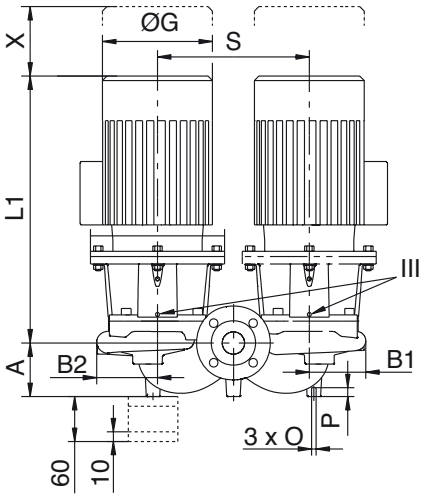

ØD	Øk	Ød	holes	holes
	mm	mm	mm	n x Ø
32	140	100	76	4 x 19
40	150	110	84	4 x 19
50	165	125	99	4 x 19
65	185	145	118	4 x 19
80	200	160	132	8 x 19

ØD	Øk	Ød	holes	holes
	mm	mm	mm	n x Ø
100	220	180	156	8 x 19
125	250	210	184	8 x 19
150	285	240	211	8 x 23
200	340	295	266	12 x 23

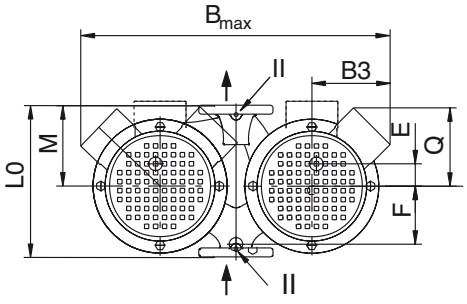

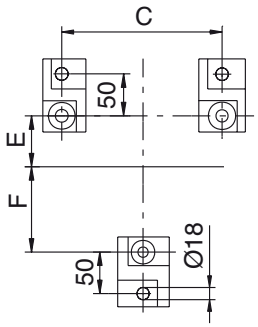

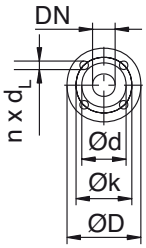

Product reference	MOTOR					PUMP					
	Nominal power of the motor	Efficiency of motor %	Power factor	Speed of rotation	Nominal current (appx.)	DN	A	B max	B1	B2	B3
	P2	η	cos ϕ	rpm	In A						
	W						mm	mm	mm	mm	mm
DIL206-21/18.5	18500	90.9	87	1450 - 2900	34.2	65	140	750	157	166	-
DIL206-22/18.5	18500	90.9	87	1450 - 2900	34.2	65	140	750	157	166	-
DIL206-22/22	22000	91.3	85	1450 - 2900	40.7	65	140	763	157	166	-
DIL208-12/4	4000	85.8	84	1450 - 2900	7.7	80	155	662	134	146	156
DIL208-13/5.5	5500	87	87	1450 - 2900	10.2	80	155	650	134	146	-
DIL208-14/7.5	7500	88.1	86	1450 - 2900	13.7	80	155	650	134	146	-
DIL208-15/7.5	7500	88.1	86	1450 - 2900	13.7	80	155	752	144	160	176
DIL208-16/11	11000	89.4	87	1450 - 2900	22	80	155	750	144	160	-
DIL208-17/11	11000	89.4	87	1450 - 2900	22	80	155	750	144	160	-
DIL208-17/15	15000	90.3	84	1450 - 2900	28.5	80	155	750	144	160	-
DIL208-19/15	15000	90.3	84	1450 - 2900	28.5	80	145	801	166	176	-
DIL208-19/18.5	18500	90.9	87	1450 - 2900	34.2	80	145	801	166	176	-
DIL208-20/18.5	18500	90.9	87	1450 - 2900	34.2	80	145	801	166	176	-
DIL208-20/22	22000	91.3	85	1450 - 2900	40.7	80	145	813	166	176	-
DIL208-22/30	30000	92	85	1450 - 2900	53	80	145	852	166	176	-
DIL210-14.5/11	11000	89.4	87	1450 - 2900	22	100	180	803	173	188	-
DIL210-15/15	15000	90.3	84	1450 - 2900	28.5	100	180	803	173	188	-
DIL210-16.5/22	15000	90.3	84	1450 - 2900	28.5	100	180	803	173	188	-
DIL210-16/15	18500	90.9	87	1450 - 2900	34.2	100	180	803	173	188	-
DIL210-16/18.5	22000	91.3	85	1450 - 2900	40.7	100	180	810	173	188	-
DIL210-17/30	30000	92	85	1450 - 2900	53	100	180	842	173	188	-
DIL210-19/30	30000	92	85	1450 - 2900	53	100	155	852	183	197	-
DIL210-21/30	30000	92	85	1450 - 2900	53	100	155	852	183	197	-
DIL210-21/37	37000	92.5	89	1450 - 2900	65	100	155	852	183	197	-

ELECTRICAL CHARACTERISTICS AND SIZES AT 1450 RPM

Table B

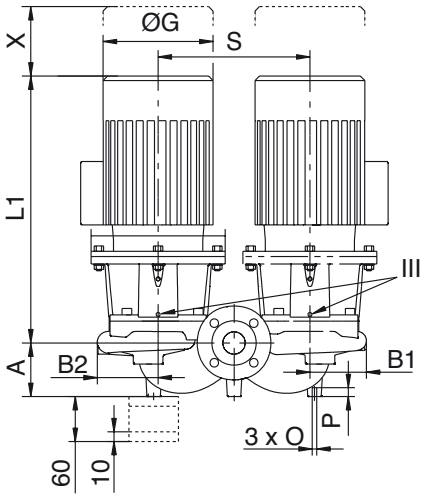

ØD	Øk	Ød	holes	holes
	mm	mm	mm	n x Ø
32	140	100	76	4 x 19
40	150	110	84	4 x 19
50	165	125	99	4 x 19
65	185	145	118	4 x 19
80	200	160	132	8 x 19

ØD	Øk	Ød	holes	holes
	mm	mm	mm	n x Ø
100	220	180	156	8 x 19
125	250	210	184	8 x 19
150	285	240	211	8 x 23
200	340	295	266	12 x 23

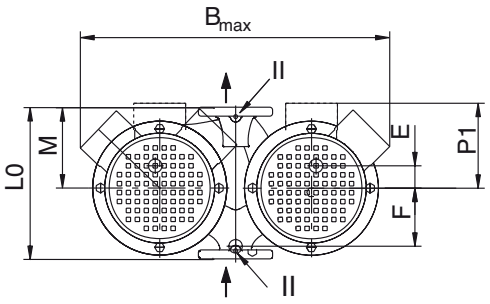

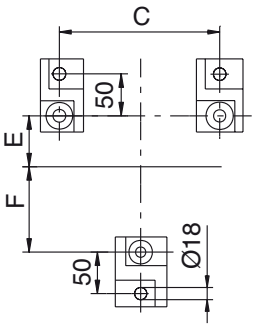

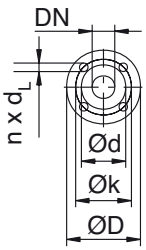

Product reference	PUMP														Table
	Q	P1	L0	L1	C	E	F	M	O	P	S	X	ØG	mass	
	mm	mm	mm	mm	mm	mm	mm	mm	mm	mm	mm	mm	mm	kg	
DIL206-21/18.5	-	250	475	784	520	45	210	245	M12	20	400	110	320	337	B
DIL206-22/18.5	-	250	475	784	520	45	210	245	M12	20	400	110	320	337	B
DIL206-22/22	-	291	475	868	520	45	210	245	M12	20	400	110	370	397	B
DIL208-12/4	156	-	400	571	400	62	178	200	M12	20	350	120	232	156	A
DIL208-13/5.5	-	188	400	622	400	62	178	200	M12	20	350	120	279	185	B
DIL208-14/7.5	-	188	400	628	400	62	178	200	M12	20	350	120	279	200	B
DIL208-15/7.5	176	-	440	627	440	62	188	220	M12	20	400	120	279	217	A
DIL208-16/11	-	250	440	783	440	62	188	220	M12	20	400	120	320	272	B
DIL208-17/11	-	250	440	783	440	62	188	220	M12	20	400	120	320	269	B
DIL208-17/15	-	250	440	783	440	62	188	220	M12	20	400	120	320	283	B
DIL208-19/15	-	250	500	787	550	72	228	250	M12	20	450	120	320	352	B
DIL208-19/18.5	-	250	500	788	550	72	228	250	M12	20	450	120	320	318	B
DIL208-20/18.5	-	250	500	788	550	72	228	250	M12	20	450	120	320	352	B
DIL208-20/22	-	291	500	872	550	72	228	250	M12	20	450	120	370	418	B
DIL208-22/30	-	305	500	929	550	72	228	250	M12	20	450	120	415	522	B
DIL210-14.5/11	-	250	500	796	580	80	250	226	M12	20	440	135	320	301	B
DIL210-15/15	-	250	500	796	580	80	250	226	M12	20	440	135	320	315	B
DIL210-16.5/22	-	250	500	796	580	80	250	226	M12	20	440	135	320	315	B
DIL210-16/15	-	250	500	797	580	80	250	226	M12	20	440	135	320	349	B
DIL210-16/18.5	-	291	500	881	580	80	250	226	M12	20	440	135	370	409	B
DIL210-17/30	-	305	500	938	580	80	250	226	M12	20	440	135	415	522	B
DIL210-19/30	-	305	550	938	560	79	251	275	M12	20	450	120	415	551	B
DIL210-21/30	-	305	550	938	560	79	251	275	M12	20	450	120	415	551	B
DIL210-21/37	-	305	550	938	560	79	251	275	M12	20	450	120	415	547	B

DIL

ELECTRICAL CHARACTERISTICS AND SIZES AT 1450 RPM

Table A

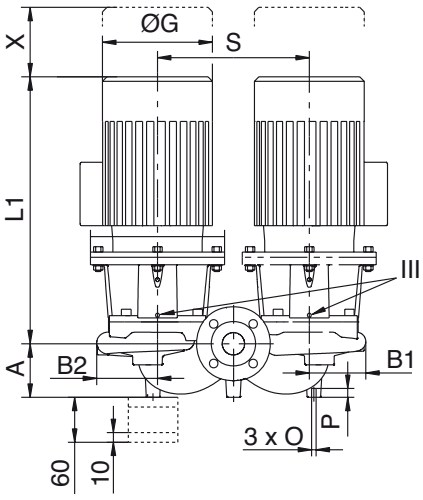

ØD	Øk	Ød	holes	holes
	mm	mm	mm	n x Ø
32	140	100	76	4 x 19
40	150	110	84	4 x 19
50	165	125	99	4 x 19
65	185	145	118	4 x 19
80	200	160	132	8 x 19

ØD	Øk	Ød	holes	holes
	mm	mm	mm	n x Ø
100	220	180	156	8 x 19
125	250	210	184	8 x 19
150	285	240	211	8 x 23
200	340	295	266	12 x 23

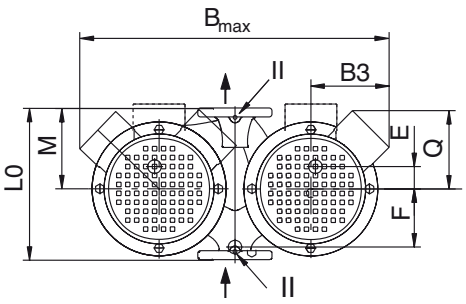

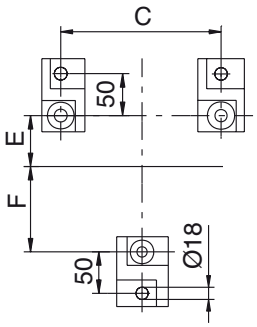

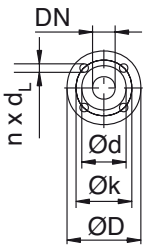

Product reference	MOTOR					PUMP					
	Nominal power of the motor	Efficiency of motor %	Power factor	Speed of rotation	Nominal current (appx.)	DN	A	B max	B1	B2	B3
	P2	η	cos ϕ	rpm	in A		mm	mm	mm	mm	mm
	W										
DIL403-14/0.25	250	74	64	1450 - 2900	0.69	32	100	539	117	122	110
DIL403-15/0.37	370	76.1	71	1450 - 2900	1.06	32	100	539	117	122	110
DIL403-17/0.55	550	78.1	66	1450 - 2900	1.4	32	100	546	117	122	123
DIL404-14/0.25	250	74	64	1450 - 2900	0.69	40	100	587	120	127	110
DIL404-15/0.37	370	76.1	71	1450 - 2900	1.06	40	100	587	120	127	110
DIL404-16/0.55	550	78.1	66	1450 - 2900	1.4	40	100	590	120	127	123
DIL404-17/0.75	750	79.6	72	1450 - 2900	1.9	40	100	590	120	127	123
DIL404-21/1.1	1100	81.4	77	1450 - 2900	2.55	40	110	692	145	147	-
DIL404-22/1.5	1500	82.8	75	1450 - 2900	3.4	40	110	692	145	147	-
DIL405-15/0.55	550	78.1	66	1450 - 2900	1.4	50	120	602	126	136	123
DIL405-16/0.75	750	79.6	72	1450 - 2900	1.9	50	120	602	126	136	123
DIL405-17/1.1	1100	81.4	77	1450 - 2900	2.55	50	120	628	126	136	144
DIL405-20/1.5	1500	82.8	75	1450 - 2900	3.4	50	120	693	145	148	-
DIL405-22/2.2	2200	84.3	73	1450 - 2900	5	50	120	693	145	148	-
DIL405-26/3	3000	85.5	75	1450 - 2900	6.6	50	122	751	177	174	-
DIL405-27/3	3000	85.5	75	1450 - 2900	6.6	50	122	751	177	174	-
DIL405-27/4	4000	86.6	79	1450 - 2900	8.4	50	122	751	177	174	-
DIL 406-12/0.55	550	78.1	0.66	1450 - 2900	1.4	65	120	592	112	134	-
DIL 406-13/0.75	750	79.6	0.72	1450 - 2900	1.9	65	120	592	121	130	-
DIL 406-14/1.1	1100	8.14	0.77	1450 - 2900	2.55	65	120	628	121	130	-
DIL406-15/0.75	750	79.6	72	1450 - 2900	1.9	65	153	678	134	144	123
DIL406-16/1.1	1100	81.4	77	1450 - 2900	2.55	65	153	688	134	144	144
DIL406-17/1.1	1100	81.4	77	1450 - 2900	2.55	65	153	688	134	144	144
DIL406-17/1.5	1500	82.8	75	1450 - 2900	3.4	65	153	688	134	144	144
DIL406-21/2.2	2200	84.3	73	1450 - 2900	5	65	140	723	157	166	-
DIL406-22/2.2	2200	84.3	73	1450 - 2900	5	65	140	723	157	166	-
DIL406-22/3	3000	85.5	75	1450 - 2900	6.6	65	140	723	157	166	-
DIL406-25/3	3000	85.5	75	1450 - 2900	6.6	65	140	760	184	176	-
DIL406-25/4	4000	86.6	79	1450 - 2900	8.4	65	140	760	184	176	-
DIL406-27/5.5	5500	87.7	78	1450 - 2900	11.3	65	140	760	184	176	-
DIL408-15/1.1	1100	81.4	77	1450 - 2900	2.55	80	155	704	144	160	144
DIL408-16/1.5	1500	82.8	75	1450 - 2900	3.4	80	155	704	144	160	144
DIL408-17/2.2	2200	84.3	73	1450 - 2900	5	80	155	710	144	160	150
DIL408-21/3	3000	85.5	75	1450 - 2900	6.6	80	145	792	166	176	-
DIL408-22/4	4000	86.6	79	1450 - 2900	8.4	80	145	792	166	176	-
DIL408-27/5.5	5500	87.7	78	1450 - 2900	11.3	80	125	836	188	198	-
DIL410-14.5/1.1	1100	8.14	77	1450 - 2900	2.55	100	180	801	173	188	144
DIL410-15/1.5	1500	82.8	75	1450 - 2900	3.4	100	180	801	173	188	144
DIL410-16/2.2	2200	84.3	73	1450 - 2900	5	100	180	801	173	188	150
DIL410-17/3	3000	85.5	75	1450 - 2900	6.6	100	180	801	173	188	155

ELECTRICAL CHARACTERISTICS AND SIZES AT 1450 RPM

Table B

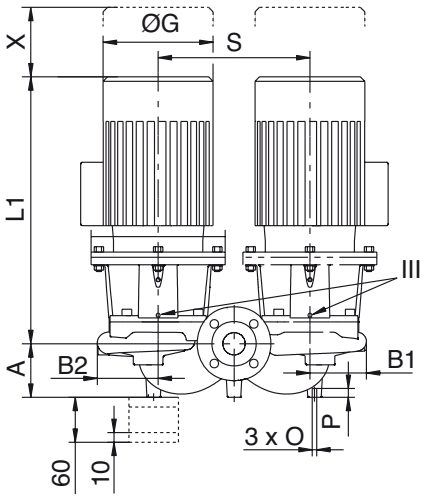

ØD	Øk	Ød	holes	holes
	mm	mm	mm	n x Ø
32	140	100	76	4 x 19
40	150	110	84	4 x 19
50	165	125	99	4 x 19
65	185	145	118	4 x 19
80	200	160	132	8 x 19

ØD	Øk	Ød	holes	holes
	mm	mm	mm	n x Ø
100	220	180	156	8 x 19
125	250	210	184	8 x 19
150	285	240	211	8 x 23
200	340	295	266	12 x 23

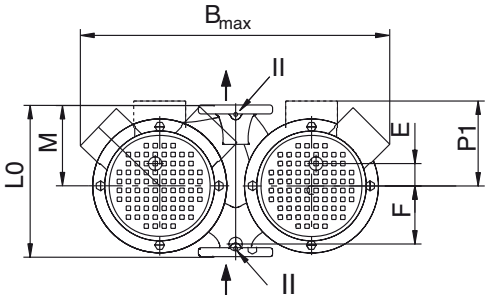

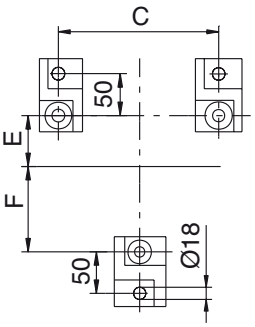

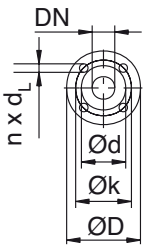

Product reference	PUMP Q	P1	L0	L1	C	E	F	M	O	P	S	X	ØG	mass	Table
	mm	mm	mm	mm	mm	mm	mm	mm	mm	mm	mm	mm	mm	kg	
DIL403-14/0.25	110	-	320	385	360	43	137	155	M10	20	300	90	164	73	A
DIL403-15/0.37	110	-	320	385	360	43	137	155	M10	20	300	90	164	73	A
DIL403-17/0.55	123	-	320	420	360	43	137	155	M10	20	300	90	185	82	A
DIL404-14/0.25	110	-	340	389	400	52	145	170	M10	20	340	95	164	74	A
DIL404-15/0.37	110	-	340	389	400	52	145	170	M10	20	340	95	164	74	A
DIL404-16/0.55	123	-	340	424	400	52	145	170	M10	20	340	95	185	84	A
DIL404-17/0.75	123	-	340	438	400	52	145	170	M10	20	340	95	185	88	A
DIL404-21/1.1	-	151	440	452	500	38	192	220	M10	20	400	100	193	113	B
DIL404-22/1.5	-	151	440	479	500	38	192	220	M10	20	400	100	193	113	B
DIL405-15/0.55	123	-	340	420	360	50	130	180	M10	20	340	100	185	88	A
DIL405-16/0.75	123	-	340	434	360	50	130	180	M10	20	340	100	185	92	A
DIL405-17/1.1	144	-	340	446	360	50	130	180	M10	20	340	100	193	105	A
DIL405-20/1.5	-	151	440	485	500	50	200	220	M10	20	400	100	193	124	B
DIL405-22/2.2	-	160	440	541	500	50	200	220	M10	20	400	100	217	144	B
DIL405-26/3	-	168	440	602	480	50	200	220	M10	20	400	120	220	169	B
DIL405-27/3	-	168	440	602	480	50	200	220	M10	20	400	120	220	169	B
DIL405-27/4	-	188	440	645	480	50	200	220	M10	20	400	120	246	183	B
DIL 406-12/0.55	-	-	340	431	140	140	60	160	M12	20	340	110	185	90	A
DIL 406-13/0.75	-	-	340	445	400	50	150	170	M12	20	340	110	185	90	A
DIL 406-14/1.1	-	-	340	457	400	50	150	170	M12	20	340	110	193	100	B
DIL406-15/0.75	123	-	430	452	440	55	185	215	M12	20	400	120	185	110	A
DIL406-16/1.1	144	-	430	464	440	55	185	215	M12	20	400	120	193	123	A
DIL406-17/1.1	144	-	430	464	440	55	185	215	M12	20	400	120	193	123	A
DIL406-17/1.5	144	-	430	491	440	55	185	215	M12	20	400	120	193	126	A
DIL406-21/2.2	-	160	475	550	520	45	210	245	M12	20	400	110	217	152	B
DIL406-22/2.2	-	160	475	550	520	45	210	245	M12	20	400	110	217	152	B
DIL406-22/3	-	168	475	585	520	45	210	245	M12	20	400	110	220	160	B
DIL406-25/3	-	168	475	605	500	50	220	235	M12	20	400	120	220	176	B
DIL406-25/4	-	188	475	648	500	50	220	235	M12	20	400	120	246	190	B
DIL406-27/5.5	-	188	475	649	500	50	220	235	M12	20	400	120	279	236	B
DIL408-15/1.1	144	-	440	469	440	62	188	220	M12	20	400	120	193	134	A
DIL408-16/1.5	144	-	440	496	440	62	188	220	M12	20	400	120	193	137	A
DIL408-17/2.2	150	-	440	552	440	62	188	220	M12	20	400	120	217	160	A
DIL408-21/3	-	168	500	590	550	72	228	250	M12	20	450	120	220	175	B
DIL408-22/4	-	188	500	633	550	72	228	250	M12	20	450	120	246	190	B
DIL408-27/5.5	-	188	500	637	560	62	233	245	M12	20	450	115	279	234	B
DIL410-14.5/1.1	144	-	500	483	580	80	250	226	M12	20	440	135	193	169	A
DIL410-15/1.5	144	-	500	510	580	80	250	226	M12	20	440	135	193	169	A
DIL410-16/2.2	150	-	500	565	580	80	250	226	M12	20	440	135	217	186	A
DIL410-17/3	155	-	500	600	580	80	250	226	M12	20	440	135	220	200	A

DIL

ELECTRICAL CHARACTERISTICS AND SIZES AT 1450 RPM

Table A

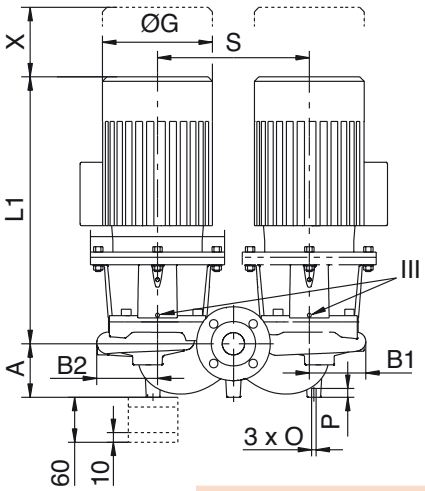

ØD	Øk	Ød	holes	holes
	mm	mm	mm	n x Ø
32	140	100	76	4 x 19
40	150	110	84	4 x 19
50	165	125	99	4 x 19
65	185	145	118	4 x 19
80	200	160	132	8 x 19

ØD	Øk	Ød	holes	holes
	mm	mm	mm	n x Ø
100	220	180	156	8 x 19
125	250	210	184	8 x 19
150	285	240	211	8 x 23
200	340	295	266	12 x 23

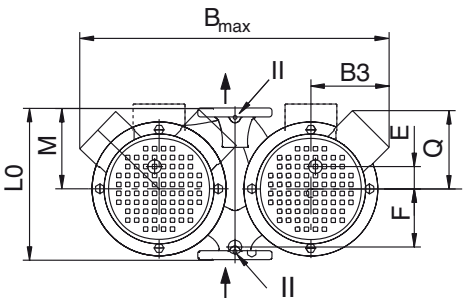

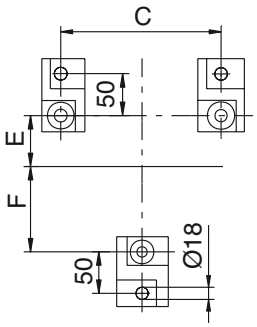

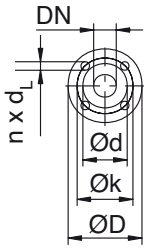

Product reference	MOTOR					PUMP					
	Nominal power of the motorr	Efficiency of motor %	Power factor	Speed of rotation	Nominal current (appx.)	DN	A	B max	B1	B2	B3
	P2	η	cos ϕ	rpm	In A						
	W						mm	mm	mm	mm	mm
DIL410-20/3	3000	85.5	75	1450 - 2900	6.6	100	155	830	183	197	-
DIL410-20/4	4000	86.6	79	1450 - 2900	8.4	100	155	830	183	197	-
DIL410-22/5.5	5500	87.7	78	1450 - 2900	11.3	100	155	830	183	197	-
DIL410-25/5.5	5500	87.7	78	1450 - 2900	11.3	100	180	888	198	210	-
DIL410-25/7.5	7500	88.7	81	1450 - 2900	15	100	180	888	198	210	-
DIL410-26/11	11000	89.8	79	1450 - 2900	22.5	100	180	888	198	210	-
DIL410-27/11	11000	89.8	79	1450 - 2900	22.5	100	180	888	198	210	-
DIL412-19/4	4000	86.6	79	1450 - 2900	8.4	125	175	894	189	205	-
DIL412-21/5.5	5500	87.7	78	1450 - 2900	11.3	125	175	894	189	205	-
DIL412-22/5.5	5500	87.7	78	1450 - 2900	11.3	125	175	894	189	205	-
DIL412-22/7.5	7500	88.7	81	1450 - 2900	15	125	175	894	189	205	-
DIL412-25/11	11000	89.8	79	1450 - 2900	22.5	125	200	1042	255	267	-
DIL412-27/11	11000	89.8	79	1450 - 2900	22.5	125	200	1042	255	267	-
DIL412-27/15	15000	90.6	83	1450 - 2900	28.8	125	200	1042	255	267	-
DIL412-30/18.5	18500	91.2	80	1450 - 2900	37.3	125	200	1119	277	292	-
DIL412-32/18.5	18500	91.2	80	1450 - 2900	37.3	125	200	1119	277	292	-
DIL412-32/22	22000	91.6	84	1450 - 2900	41.5	125	200	1119	277	292	-
DIL412-34/30	30000	92.3	85	1450 - 2900	55.7	125	200	1119	277	292	-
DIL415-19/5.5	5500	87.7	78	1450 - 2900	11.3	150	210	1006	215	241	-
DIL415-20/7.5	7500	88.7	81	1450 - 2900	15	150	210	1006	215	241	-
DIL415-22/11	11000	89.8	79	1450 - 2900	22.5	150	210	1006	215	241	-
DIL415-25/15	15000	90.6	83	1450 - 2900	28.8	150	230	1203	293	310	-
DIL415-26/15	15000	90.6	83	1450 - 2900	28.8	150	230	1203	293	310	-
DIL415-26/18.5	18500	91.2	80	1450 - 2900	37.3	150	230	1203	293	310	-
DIL415-27/18.5	18500	91.2	80	1450 - 2900	37.3	150	230	1203	293	310	-
DIL415-27/22	22000	91.6	84	1450 - 2900	41.5	150	230	1203	293	310	-
DIL415-30/30	30000	92.3	85	1450 - 2900	55.7	150	230	1293	314	329	-
DIL415-32/37	37000	92.7	84	1450 - 2900	69	150	230	1293	314	329	-
DIL415-34/37	37000	92.7	84	1450 - 2900	69	150	230	1293	314	329	-
DIL415-34/45	45000	93.1	83	1450 - 2900	83.3	150	230	1293	314	329	-
DIL420-24/15	15000	90.6	83	1450 - 2900	28.8	200	250	1369	322	347	-
DIL420-25/18.5	18500	91.2	80	1450 - 2900	37.3	200	250	1369	322	347	-
DIL420-26/22	22000	91.6	84	1450 - 2900	41.5	200	250	1369	322	347	-
DIL420-27/30	30000	92.3	85	1450 - 2900	55.7	200	250	1369	322	347	-
DIL420-30/37	37000	92.7	84	1450 - 2900	69	200	245	1400	339	361	-
DIL420-31.5/37	45000	93.1	83	1450 - 2900	83.3	200	245	1400	339	361	-
DIL420-33.5/37	37000	92.7	0.84	1450 - 2900	69	200	245	1400	339	362	-
DIL420-33.5/45	45000	93.1	0.83	1450 - 2900	83.3	200	245	1400	339	362	-
DIL420-34.5/45	45000	93.1	0.83	1450 - 2900	83.3	200	245	1400	339	362	-
DIL420-34.5/55	55000	93.5	85	1450 - 2900	100	200	245	1400	339	361	-

ELECTRICAL CHARACTERISTICS AND SIZES AT 1450 RPM

Table B

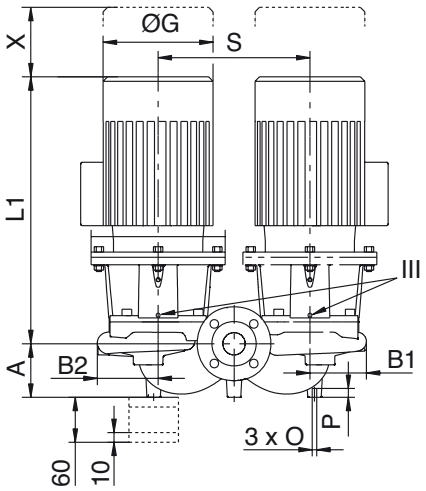

ØD	Øk	Ød	holes	holes
	mm	mm	mm	n x Ø
32	140	100	76	4 x 19
40	150	110	84	4 x 19
50	165	125	99	4 x 19
65	185	145	118	4 x 19
80	200	160	132	8 x 19

ØD	Øk	Ød	holes	holes
	mm	mm	mm	n x Ø
100	220	180	156	8 x 19
125	250	210	184	8 x 19
150	285	240	211	8 x 23
200	340	295	266	12 x 23

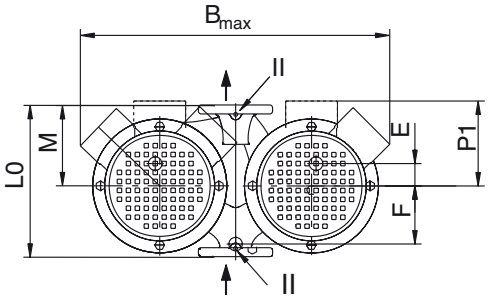

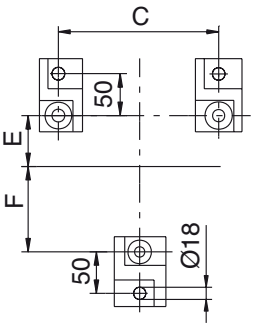

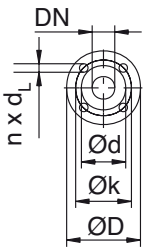

Product reference	PUMP														Table
	Q	P1	L0	L1	C	E	F	M	O	P	S	X	ØG	mass	
	mm	mm	mm	mm	mm	mm	mm	mm	mm	mm	mm	mm	mm	kg	
DIL410-20/3	-	168	550	598	560	79	251	275	M12	20	450	120	220	203	B
DIL410-20/4	-	188	550	641	560	79	251	275	M12	20	450	120	246	217	B
DIL410-22/5.5	-	188	550	642	560	79	251	275	M12	20	450	120	279	270	B
DIL410-25/5.5	-	188	550	647	600	54	266	260	M12	20	480	120	279	288	B
DIL410-25/7.5	-	250	550	698	600	54	266	260	M12	20	480	120	312	317	B
DIL410-26/11	-	250	550	761	600	54	266	260	M12	20	480	120	320	373	B
DIL410-27/11	-	250	550	761	600	54	266	260	M12	20	480	120	320	373	B
DIL412-19/4	-	188	620	660	640	68	283	312	M16	25	500	120	246	238	B
DIL412-21/5.5	-	188	620	661	640	68	283	312	M16	25	500	120	279	284	B
DIL412-22/5.5	-	188	620	661	640	68	283	312	M16	25	500	120	279	284	B
DIL412-22/7.5	-	250	620	712	640	68	283	312	M16	25	500	120	312	310	B
DIL412-25/11	-	250	620	774	591	86	314	280	M16	25	520	130	320	418	B
DIL412-27/11	-	250	620	774	591	86	314	280	M16	25	520	130	320	418	B
DIL412-27/15	-	250	620	814	591	86	314	280	M16	25	520	130	320	465	B
DIL412-30/18.5	-	258	700	924	800	51	334	340	M16	25	550	140	370	561	B
DIL412-32/18.5	-	258	700	924	800	51	334	340	M16	25	550	140	370	561	B
DIL412-32/22	-	258	700	924	800	51	334	340	M16	25	550	140	370	592	B
DIL412-34/30	-	305	700	981	800	51	334	340	M16	25	550	140	415	711	B
DIL415-19/5.5	-	188	700	665	640	91	309	365	M16	25	550	130	279	360	B
DIL415-20/7.5	-	250	700	716	640	91	309	365	M16	25	550	130	312	386	B
DIL415-22/11	-	250	700	779	640	91	309	365	M16	25	550	130	320	440	B
DIL415-25/15	-	250	700	845	696	116	344	330	M16	25	600	135	320	565	B
DIL415-26/15	-	250	700	845	696	116	344	330	M16	25	600	135	320	575	B
DIL415-26/18.5	-	258	700	929	696	116	344	330	M16	25	600	135	370	623	B
DIL415-27/18.5	-	258	700	929	696	116	344	330	M16	25	600	135	370	623	B
DIL415-27/22	-	258	700	929	696	116	344	330	M16	25	600	135	370	654	B
DIL415-30/30	-	305	770	994	758	130	374	370	M16	25	650	145	415	829	B
DIL415-32/37	-	325	770	1053	758	130	374	370	M16	25	650	145	456	1029	B
DIL415-34/37	-	325	770	1053	758	130	374	370	M16	25	650	145	456	1029	B
DIL415-34/45	-	325	770	1113	758	130	374	370	M16	25	650	145	456	1109	B
DIL420-24/15	-	250	800	870	1000	62	400	370	M16	25	700	140	320	713	B
DIL420-25/18.5	-	258	800	954	1000	62	400	370	M16	25	700	140	370	760	B
DIL420-26/22	-	258	800	954	1000	62	400	370	M16	25	700	140	370	791	B
DIL420-27/30	-	305	800	1011	1000	62	400	370	M16	25	700	140	415	908	B
DIL420-30/37	-	325	820	1078	808	129	391	400	M16	25	700	155	456	1150	B
DIL420-31.5/37	-	325	820	1138	808	129	391	400	M16	25	700	155	456	1230	B
DIL420-33.5/37	-	325	820	1078	808	129	391	400	M16	25	700	155	456	1189	B
DIL420-33.5/45	-	325	820	1138	808	129	391	400	M16	25	700	155	456	1251	B
DIL420-34.5/45	-	325	820	1138	808	129	391	400	M16	25	700	155	456	1251	B
DIL420-34.5/55	-	392	820	1237	808	129	391	400	M16	25	700	155	515	1518	B

DIL

ASSEMBLY POSITIONS

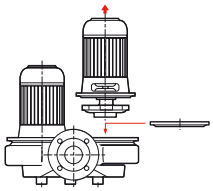

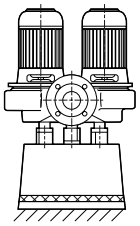

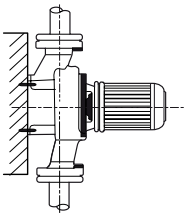

The unit may be mounted with the shaft of the motor horizontal, up to a nominal power of 15 kW.

Do not mount with the “motor at the bottom”.

*Do not fit a butterfly valve directly on the output flange so as not to obstruct the operation of the valve.

WIRING DIAGRAM

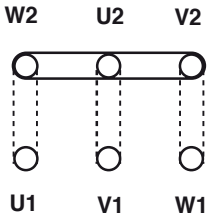

P2 ≤ 3 kW
3 ~ 400 V = Y
3 ~ 230 V = Δ

P2 ≥ 4 kW
3 ~ 400 V = Δ

For star-triangle start-up, remove the connecting strips

PARTICULAR FEATURES

a) Supply

P2 ≤ 3 kW:	three-phase 400 V Y 50 Hz
	three-phase 230 V Δ 50 Hz
P2 ≥ 4 kW:	three-phase 400 V Δ 50 Hz.

b) Installation

Mounted directly onto horizontal or vertical pipework or on pad.
The pump must be installed so that it is protected against weather and frost, and not be exposed to direct rain or sunlight.

c) Packaging

Pump delivered with back-flange gaskets.

d) Maintenance

- Repair: see recommended spare parts.

• Accessories recommended

- Back flanges
- Pressure tapping kit
- Protective slave switch
- Shut-off valves
- Anti-vibration sleeves
- Non-return valves
- Base support kit

Special mechanical seal as option for glycol water of 20 - 40% if the temperature is greater than 40°C (consult us).

OPERATING RANGE

Flow rates up to:	**630 m³/h**
Mano. head up to:	**65 m**
Max. operating pressure:	
	13 bar up to +140°C
	16 bar up to +120°C
Temperature range:	**–20° to +140°C**
Max. ambient temperature:	**+40°C**
Opening DN:	**40 to 200**
Reference MEI*:	**≥ 0,10**

*Minimum Efficiency Index

SIE

ELECTRONIC REGULATION IN-LINE PUMPS

Heating - Air conditioning

50 Hz

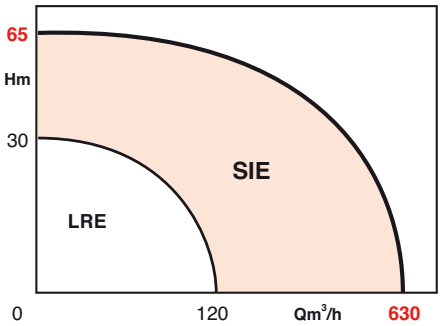

ADVANTAGES

·ENERGY SAVINGS
- Optimisation of pump operating point.
- Up to 50% energy saving compared with traditional pumps.

·NOISE CONTROL
- Elimination of whistling and noise in thermostatic taps.

·RELIABILITY
- Fully automatic operation not requiring any maintenance or sensor draining.
- Electronic unit fitted with a non-volatile memory for data storage and the protection of instructions in the event of a power cut.
- Protection index IP 55 for the motor/unit system in case of use in a dusty, damp environment.

·SIMPLICITY
- A single button is used to select functions and adjust the instructions.
- Parameters visible at all times on LCD screen.

APPLICATIONS

Pumps used for the circulation of hot or cold water without abrasive residue in heating, cold and iced water systems and irrigation systems.
If additives such as glycol or oil are used, it is important to ensure that the joints are suitable and whether a flow adjustment is necessary (for additions of glycol from 20% vol).

·Accepted pumped liquids:
- Heating water according to VDI 2035
- Cooling and cold water
- Water/glycol mixtures [1]
- Heat transfer oil [2]
- Other liquids on request [3]

Features
2 pole: 750 - 2900 rpm.
4 pole: 380 - 1450 rpm
Continuous power adjustment.

1) For 20 - 40 % glycol vol. and liquid temperature of ≤ 40° C
2) Special model with price supplement
3) Special model with price supplement



EVS

SIE

CONSTRUCTION

• Hydraulic section

- Single-stage low-pressure centrifugal pump, in-line construction with suction and discharge flanges with the same nominal diameter with standard IEC motor cooled by air.
- Reamed flanges PN 16 according to EN 1092-2.
- Pressure gauge connections G 1/8 used for incorporated differential pressure sensor.
- The pump body is fitted with a series of projections and intended for use with a maximum operating pressure of 16 bars.
- The pump body is fitted with a series of projections and intended for use with a maximum operating pressure of 16 bars.
- The body and the closed impeller are made from grey cast iron.
- The mechanical seal, which does not require maintenance and is independent from the rotation direction, is suitable for pure water up to 140°C and water/glycol mixtures up to 40% vol. and a maximum temperature of 40°C [1].
- Materials and special seals available for other uses.

• Motor

High output IE2
Thermal protection integrated by CTP temperature probe in all the motor coils (thermistor).
- Three-phase squirrel-cage motor

Speed: 2 poles : 750-2900 rpm
4 poles : 380-1450 rpm
Voltage: 3~400 V, 50 Hz
3~380 V, 60 Hz
Protection index: IP 55
Insulation category: 155 (F)
CEM compliance: EN 61800-3
Protection differential (FI)
FI differential circuit breakers selective “all currents” model, are approved (leakage current > 300 mA).
Initials FI 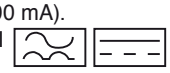

BASIC CONSTRUCTION

Main parts	Material
Pump body	EN-GJL 250 [2]
Impeller	EN-GJL 200 [3]
	G-CuSn 10 [4]
Lantern	EN-GJL 250
Shaft	1,4122/X39CrMo17-1
Mechanical seal	Graphite/Silicon carbide/ EP

* Other mechanical seals [5] on request.

IDENTIFICATION

SIE 205 - 17/7,5 - 2G - R1

SIE: pump code
Motor 2: 2 poles
4: 4 poles
nominal Ø of openings in cm
nominal Ø of impeller in cm
Motor power in kW
2nd generation
Without pressure sensor

EQUIPMENT

- **Δ P-c regulation mode** for constant differential pressure in the pump
- **Δ P-c regulation mode** for variable differential pressure in the pump
- **Speed adjustments by signal (0-10V, 2-10V, 0-20mA, 4-20mA)** for connection to an external GTC unit
- Manual speed control
- **PID regulation**: constant size regulation with adjustment of the PID control loop.
- Graphic display
- Fault indicator
- Reset button in case of faults
- Centralised operating signal when powered off (opened contact)
- Centralised fault signal (closed contact)
- External on/off
- “Analogue 0… 10V**” input.

ASSEMBLY

Direct assembly on horizontal piping (or vertical up to max. 15 kW) or on solid equipment
Assembly is not permitted with the motor or unit facing downwards. Space must be provided for dismantling of the motor, lantern and impeller.

Possible assemblies

- On piping
- On a console [6]

Pressure gauge pipe connections
Flanges according to PN 16/EN 1092-2.

PARTICULARITIES

• Packaging

The pump, packaging and assembly and instruction manual are included in the delivery.

• Accessories

- Consoles for assembly on a base
- IF unit (ModBUS, LON, BACnet S/TP, CAN, digital interface PLR) [7]
- Salmson Pump Control Kit to control Salmson electronic pumps remotely by an infra-red system.

1) for 20 - 40 % vol. of glycol an liquid temperature ≤ 40°
2) formerly Ft 25, anti-corrosion treatment
3) formerly Ft 20
4) Special model with price supplement
5) for example for water/ glycol mixtures different from 1)
6) Special model with price supplement
7) See function table

REPRESENTATIVE CROSS-SECTION

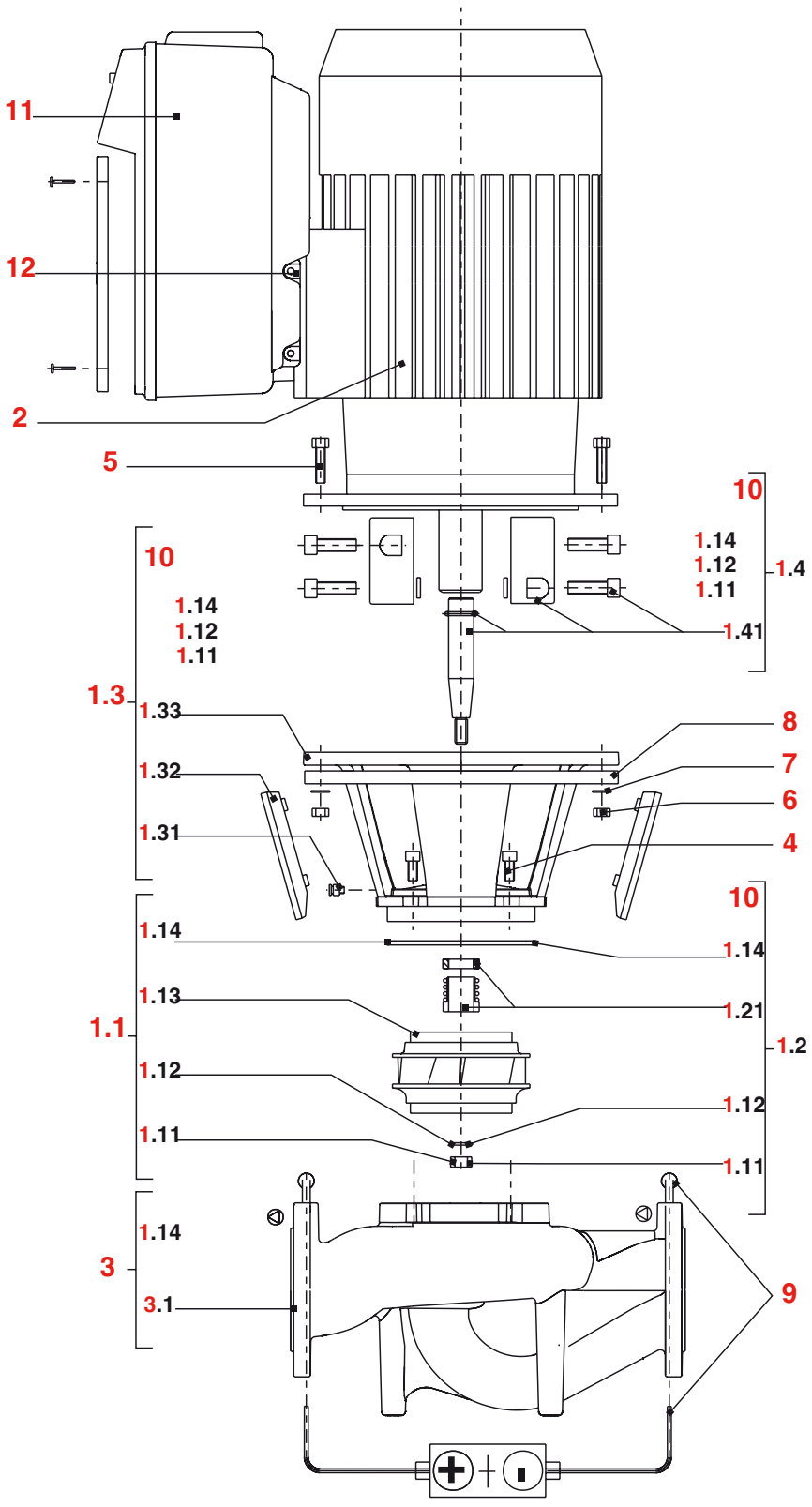

1.1 Set of spare parts including
- 1.11 Nut
- 1.12 Washer
- 1.13 Impeller
- 1.14 O-ring

1.2 Set of mechanical seal spare parts including
- 1.21 Complete mechanical seal

1.3 Set of lantern spare parts including
- 1.31 Air purger
- 1.32 Coupling protector
- 1.33 Lantern

1.4 Set of shaft spare parts including
- 1.41 Coupling + shaft
- 1.5 Complete coupling

2. Motor
3. Complete pump body with
   - 3.1 Pump body
4. Attachment screw for lantern/pump
5. Attachment screw for motor/lantern
6. Nut for motor/lantern attachment
7. Washer for motor/lantern attachment
8. Adjustment ring for DN 100 motor.
9. Differential pressure indicator
10. Tool
11. Unit
12. Adapter.

SIE

IF UNIT

Additional plug-in unit for electrical regulation pumps in the SIE series (a single unit is required) providing the following additional functions:

- interface for communication BUS (ModBUS, LON, BACnet S/TP, CAN, digital interface PLR) for connection to the home automation system.



CONNECTION DIAGRAM

Three-phase current 3~400V, 50Hz/380V, 60 Hz

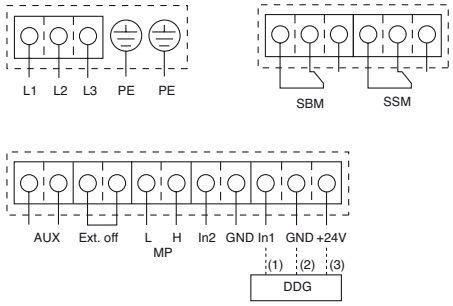

Admissible dry contact values for On and Fault :
- min. 12 V DC/ 10 mA
- max. 250 V AC/1 A

L1,L2,L3,PE : network connection 3~400V - 50 Hz – 3~380V - 60 Hz
SSM : dry contact fault signal
SBM : dry contact on signal
Ext. Off : Remote On/Off
MP : double pump management (or 2 singles)
(3) : +24 V (output) for external sensor supply - Imax : 60mA
(2) : earth (⊥) sensor
(1) : 0 - 10 V (input) incorporated or external sensor (GTC)
4…20 mA : analogue signal (input) for external control (GTC)

SIE FUNCTION TABLE

Function	SIE single pump
Power supply	
3~400V, 50 Hz	•
3~380V, 60 Hz	•
Operating selection	
Pump On/Off	•
Regulation mode selection (Δ p-c, Δ p-v, PID)	•
Adjustment of recommended differential pressure value	•
Speed adjustment (operation by manual regulator)	•
PID	•
Automatic function	
Continuous speed regulation Δ p-c	•
Continuous speed regulation Δ p-v	•
Integrated thermal motor protection with activation	•
External control function	
Remote On/Off	•
Control input “0 … 10V” ou “4…20mA” ou “2…10V” ou “0…20mA” (remote adjustment of speed and settings)	•
Signalling and display function	
Centralised operation signal (dry contact)	•
Centralised fault signal (dry contact)	•
Fault indicator	•
Error code	•
LCD display for pump data	•
Data exchange	
Interface for communication BUS (ModBUS, LON, BACnet S/TP, CAN, digital interface PLR) for connection to the home automation system	• 1)
IInfra-red interface for wireless data exchange with Salmson Pump control USB key connected to laptop	•
Double pump management (2 x single pumps)	
Normal/backup mode (automatic switching in case of fault/pump replacement according to time)	•
Cascade mode (connecting to/removing from circuit during peak loads for optimised energy consumption)	•

1) with 1 IF unit (accessory)

GENERAL PRESELECTION GRAPH - 2 POLE - 50HZ

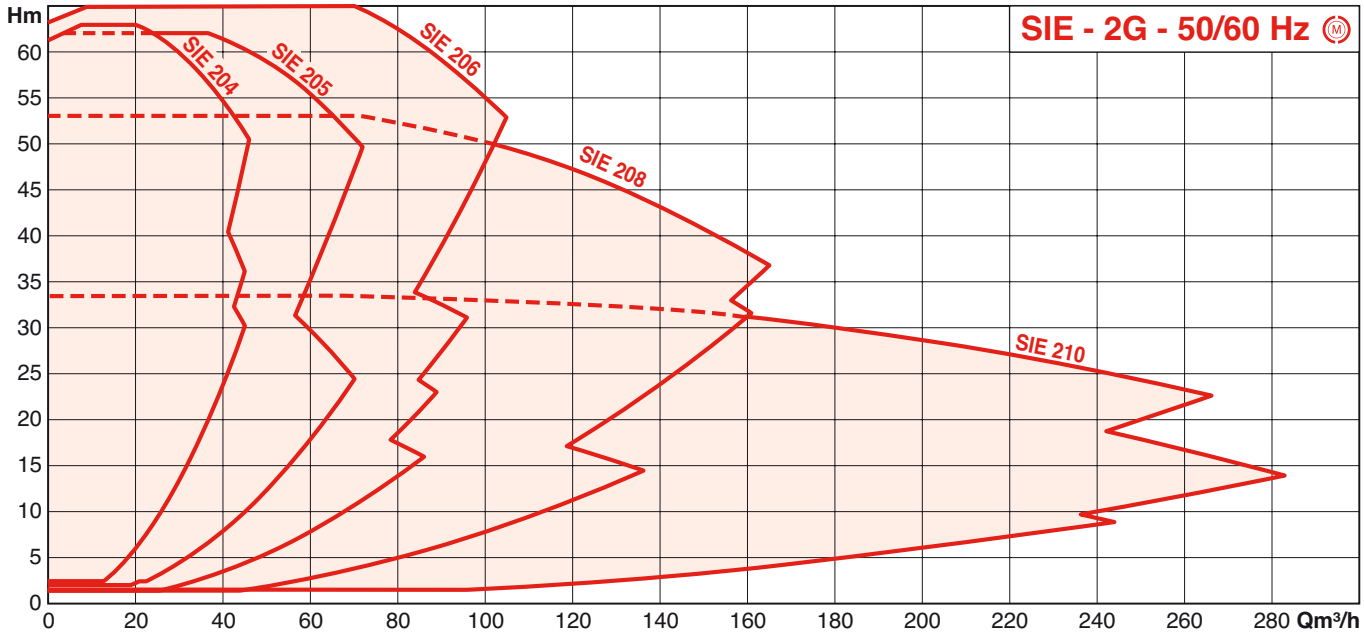

GENERAL PRESELECTION GRAPH - 4 POLE - 50HZ

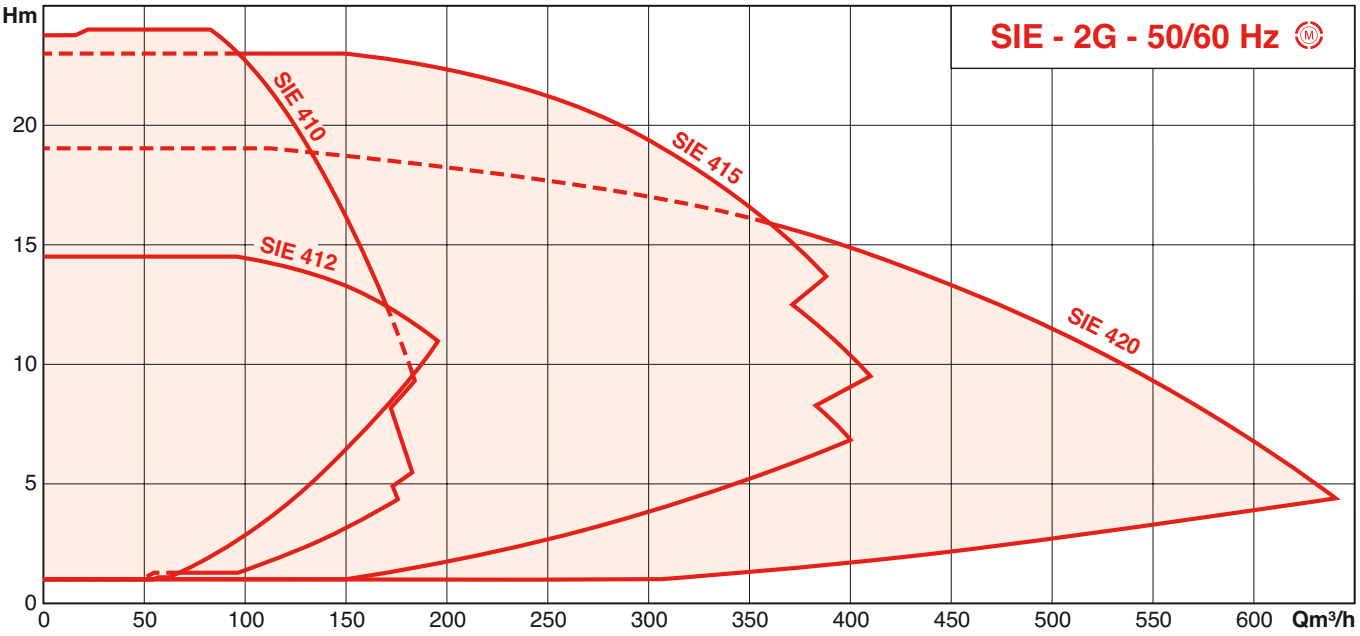

SIE

HYDRAULIC PERFORMANCES - 2 POLE

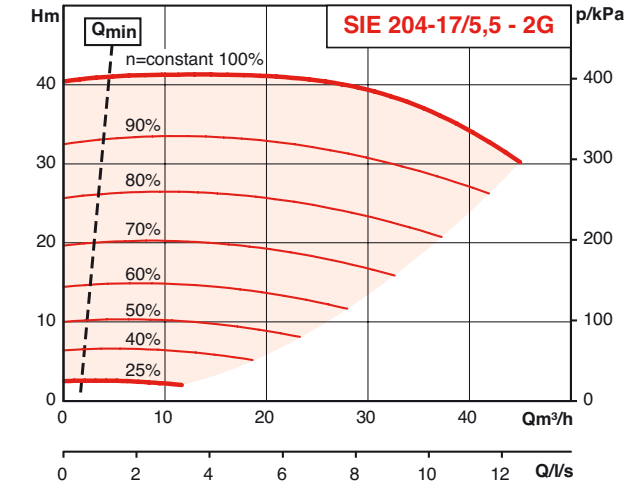

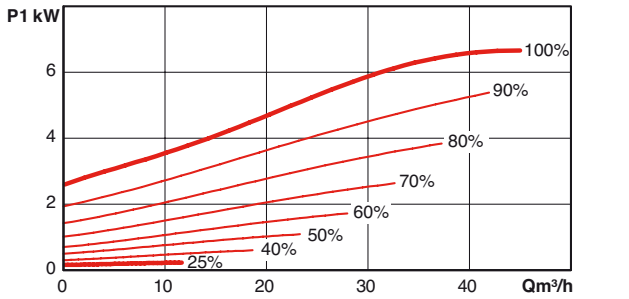

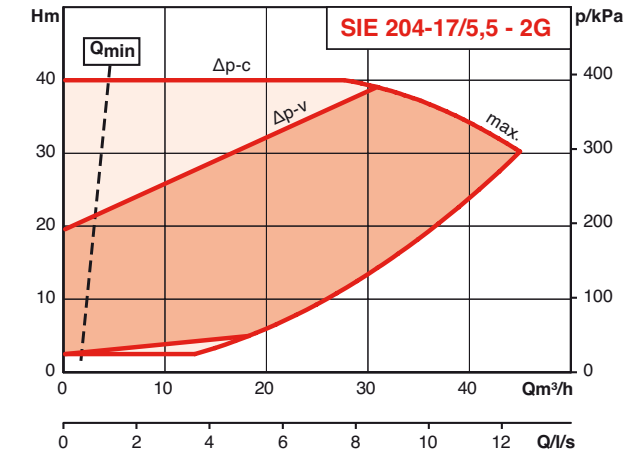

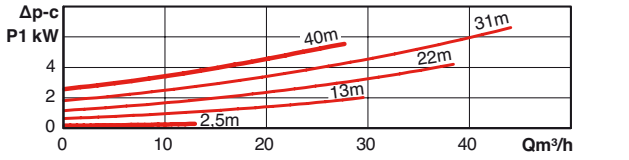

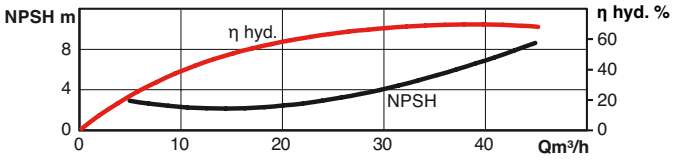

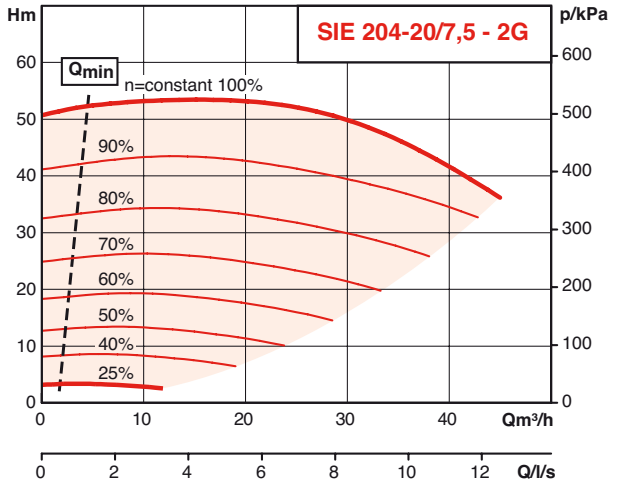

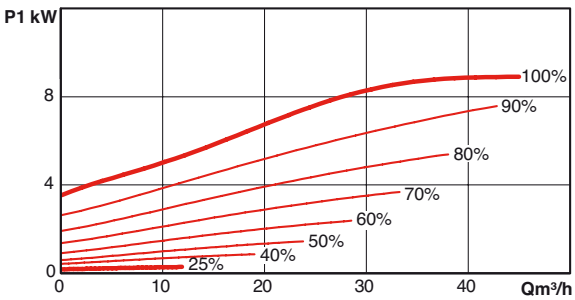

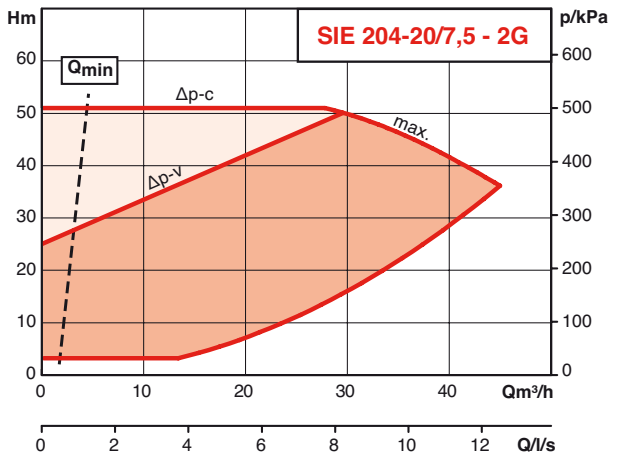

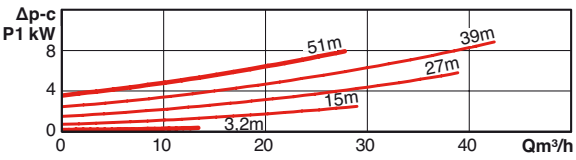

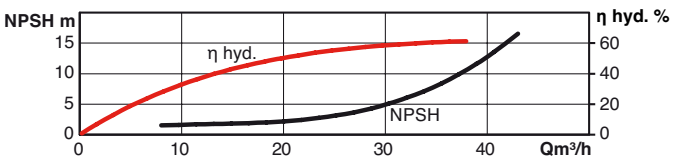

HYDRAULIC PERFORMANCES - 2 POLE

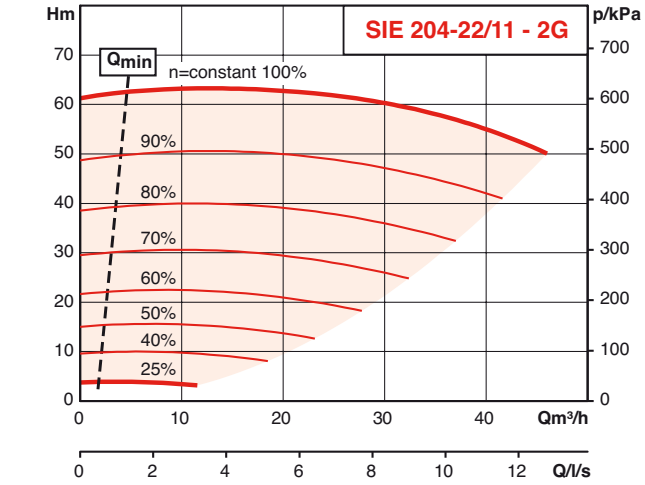

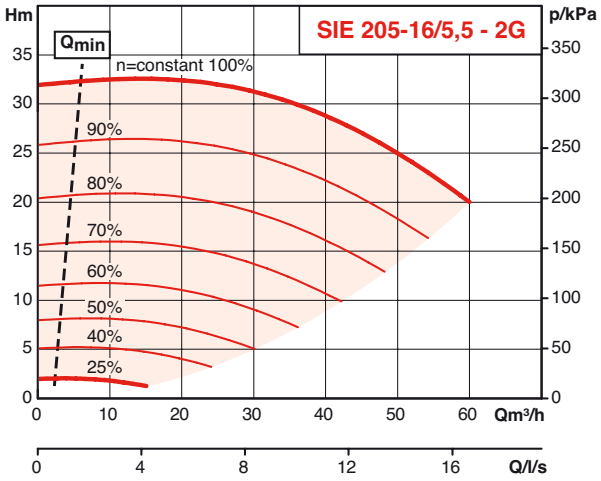

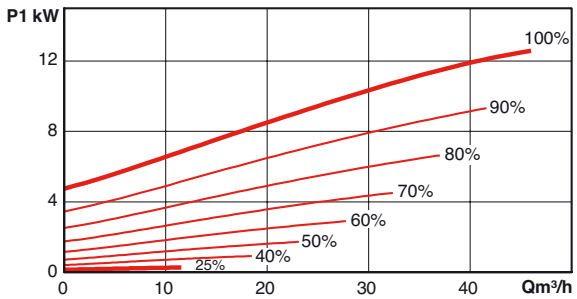

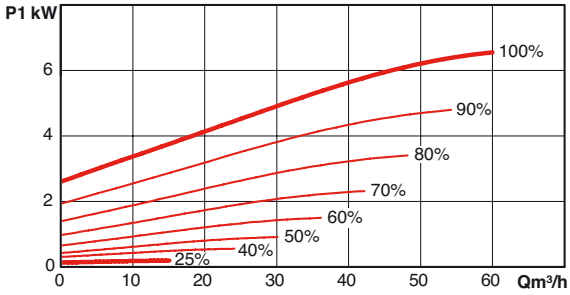

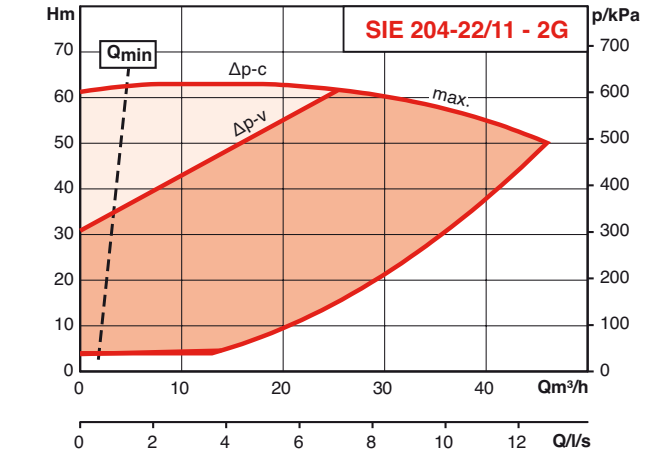

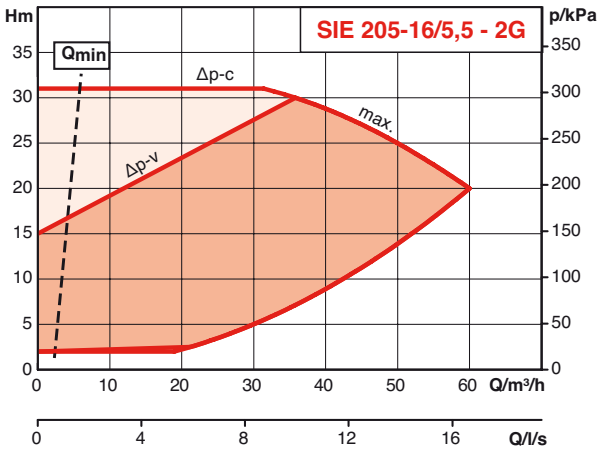

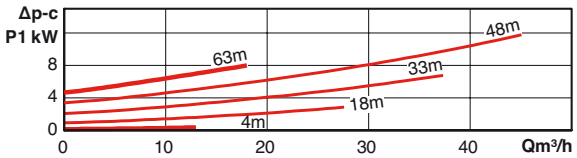

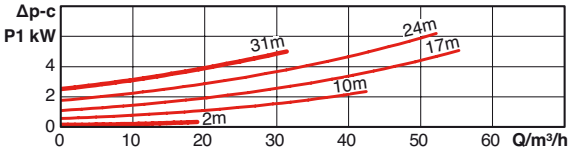

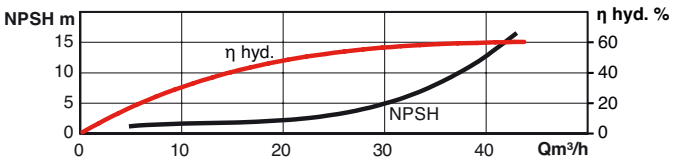

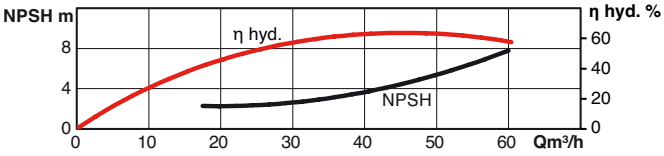

SIE

HYDRAULIC PERFORMANCES - 2 POLE

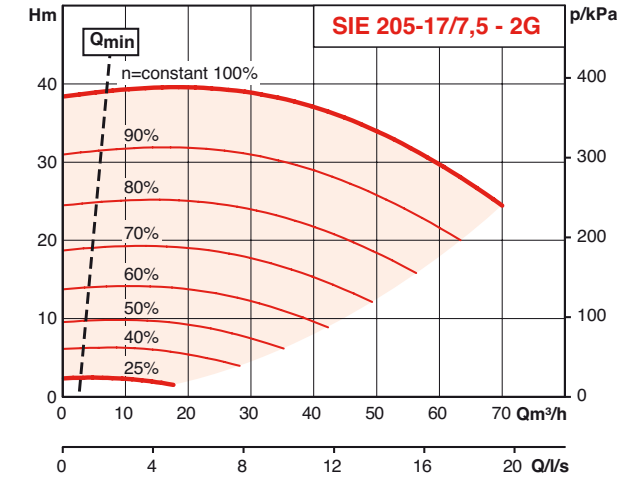

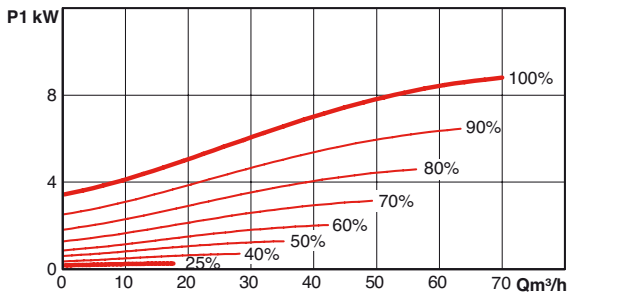

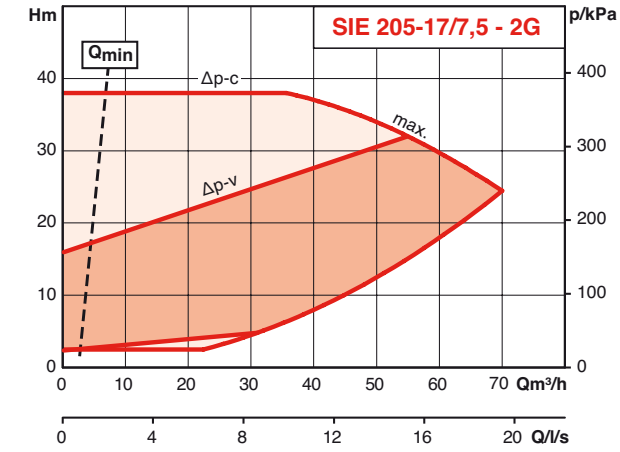

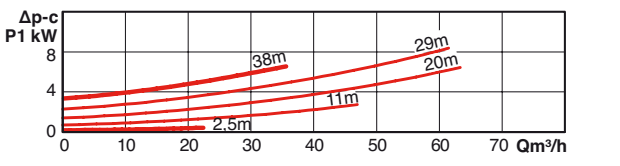

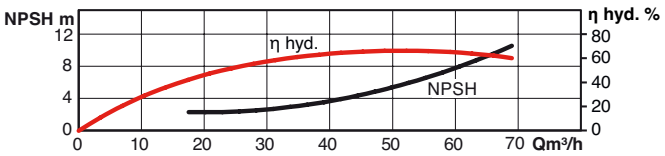

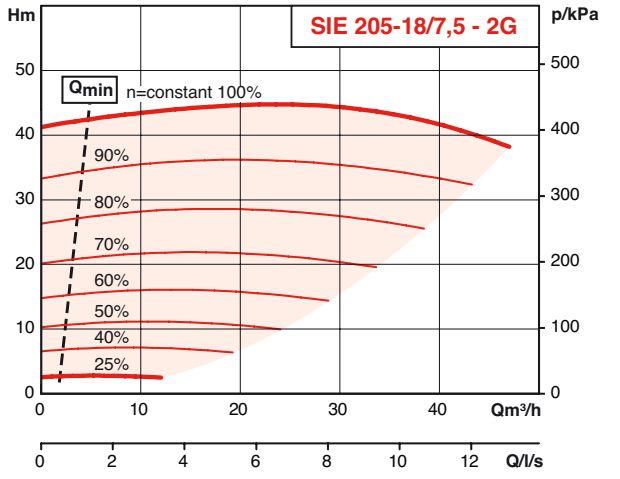

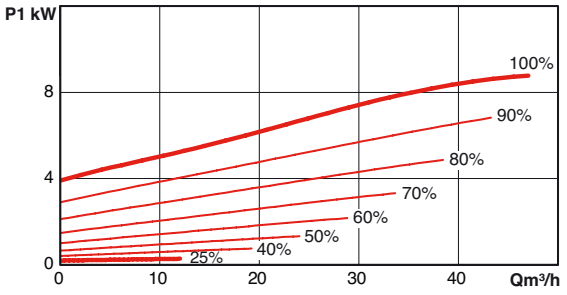

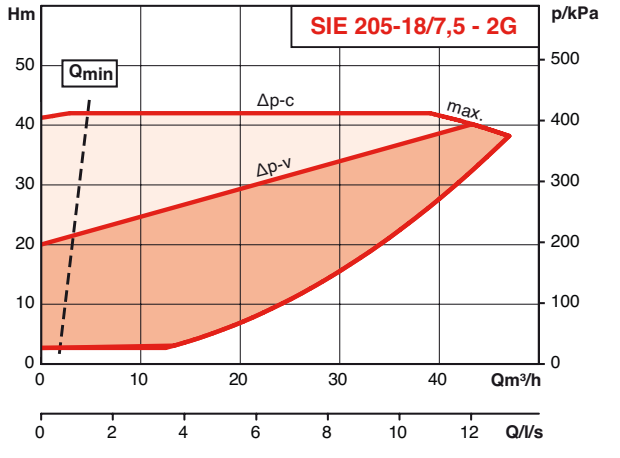

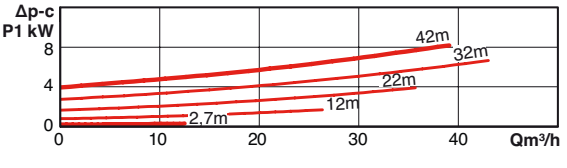

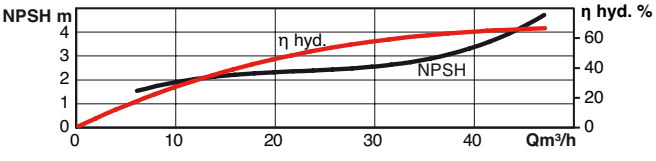

HYDRAULIC PERFORMANCES - 2 POLE

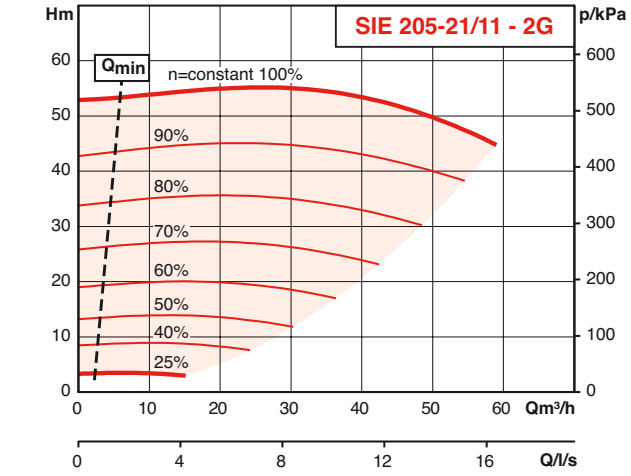

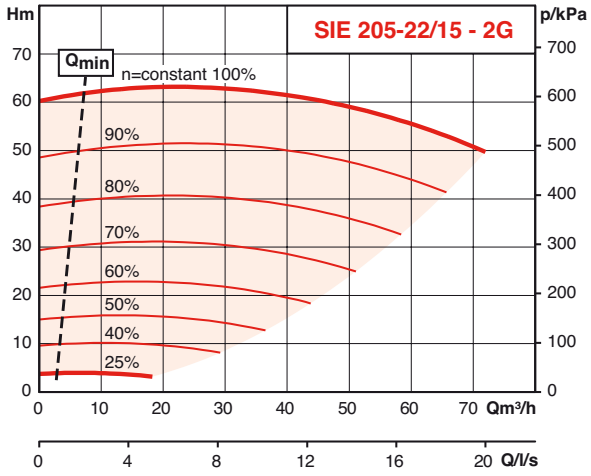

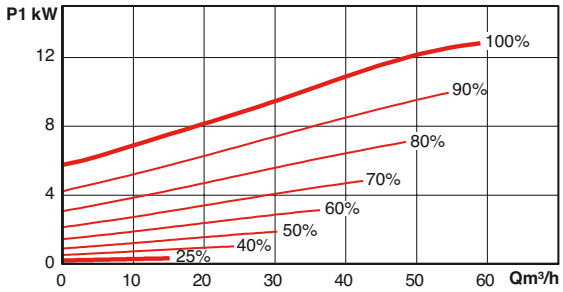

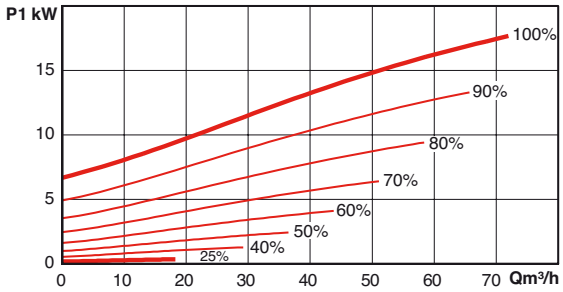

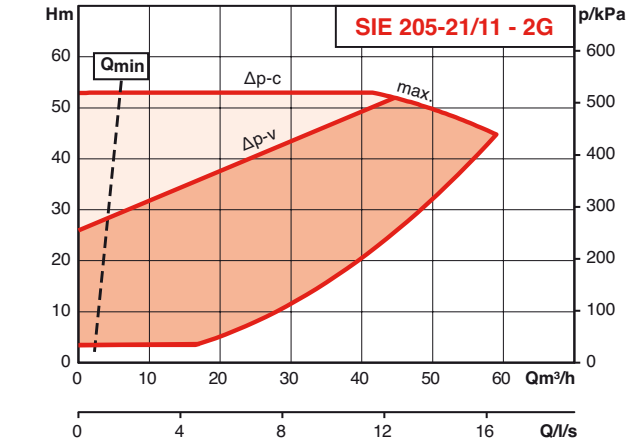

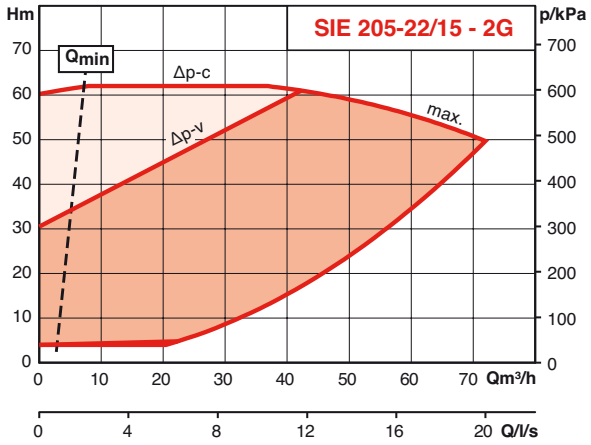

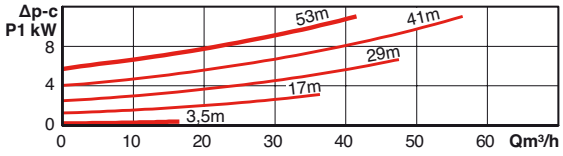

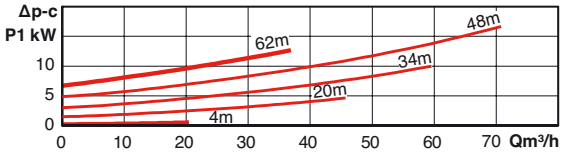

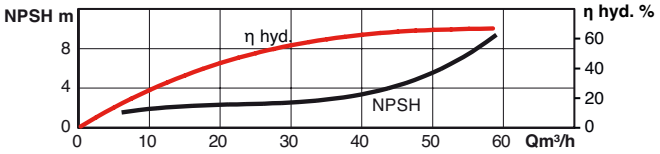

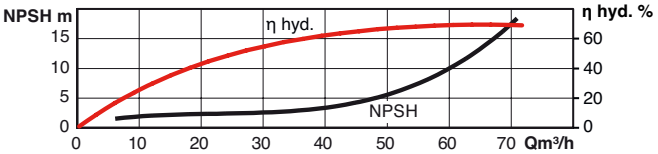

SIE

HYDRAULIC PERFORMANCES - 2 POLE

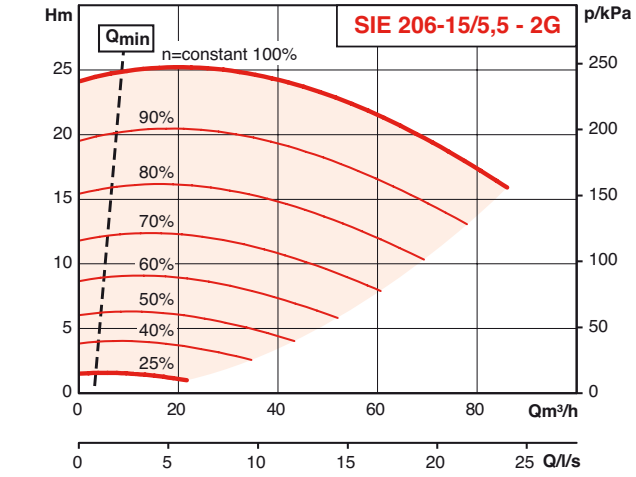

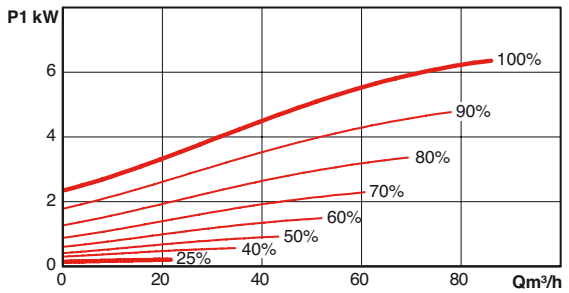

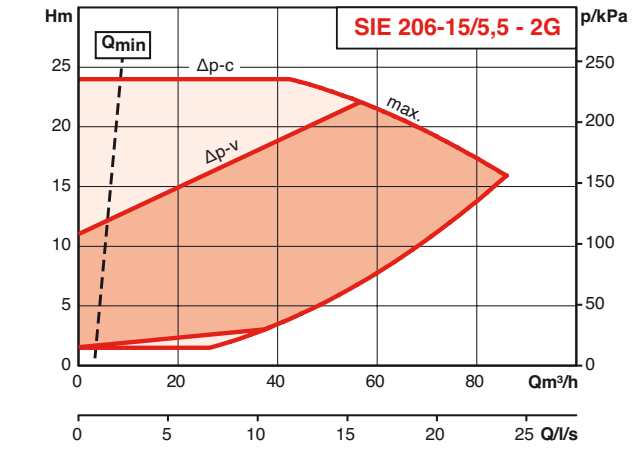

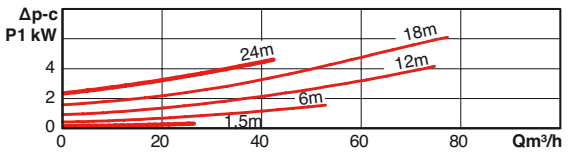

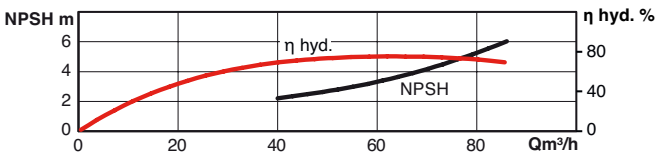

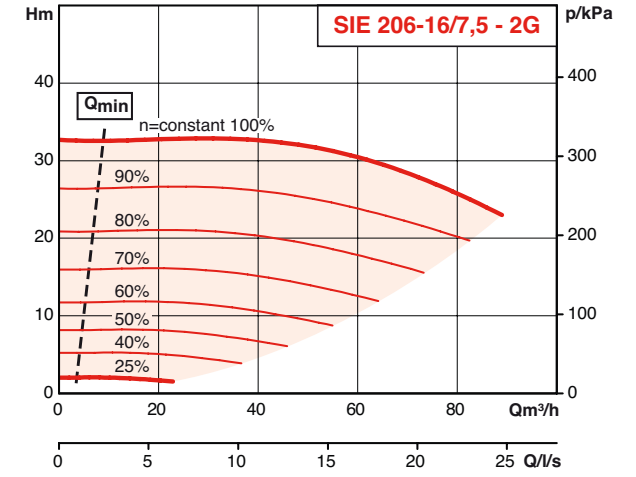

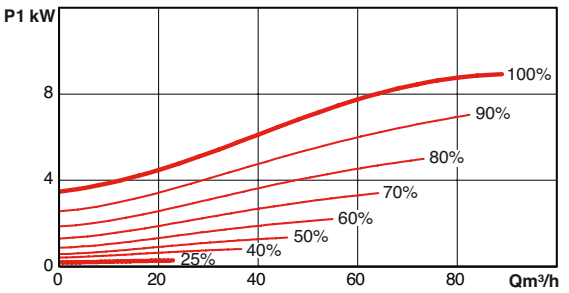

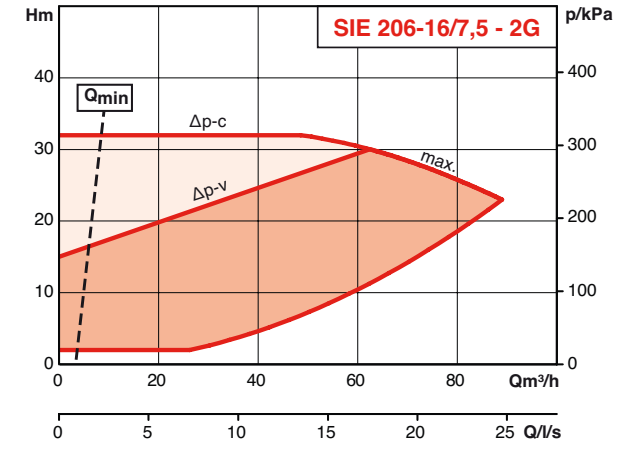

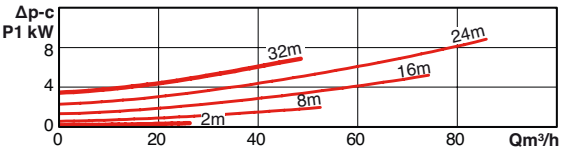

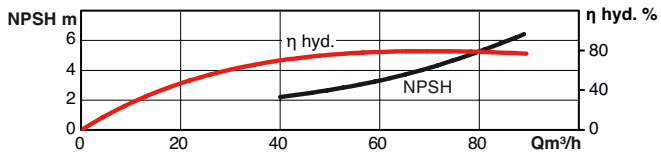

HYDRAULIC PERFORMANCES - 2 POLE

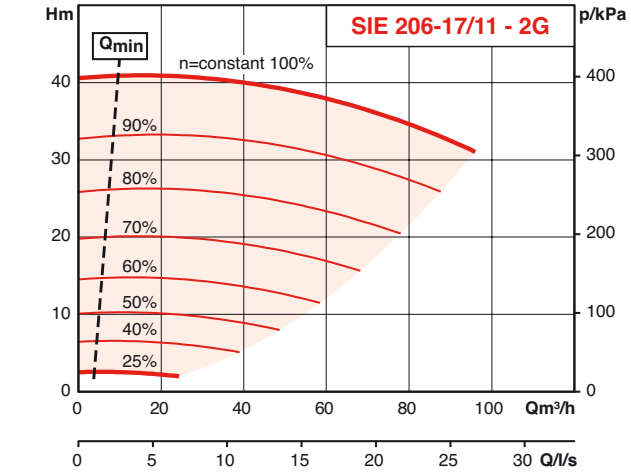

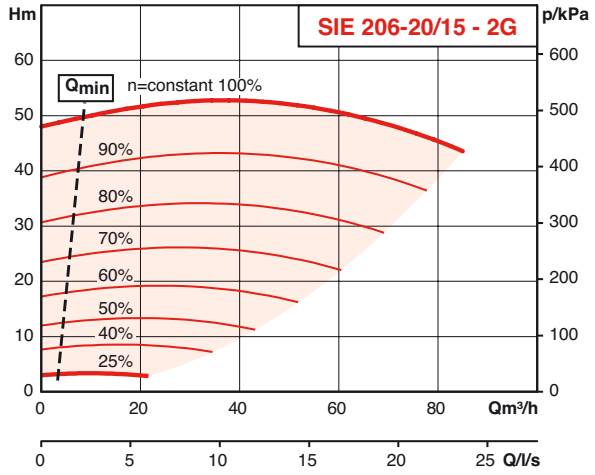

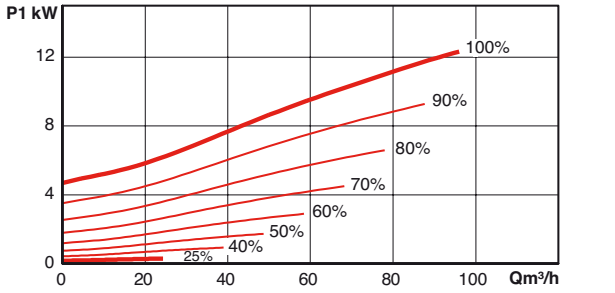

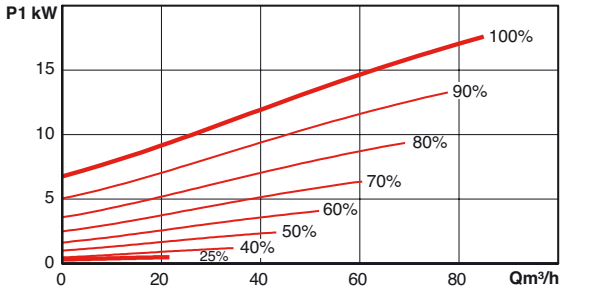

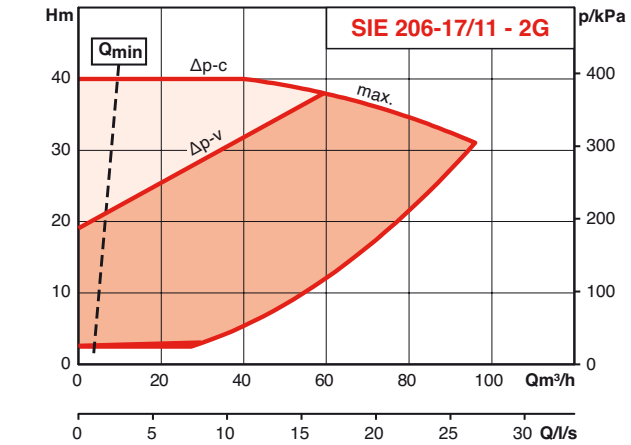

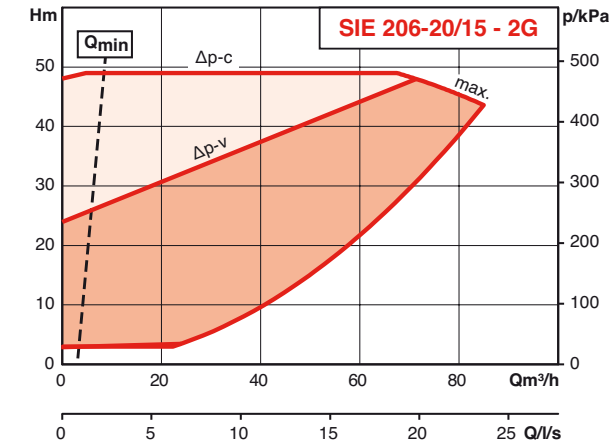

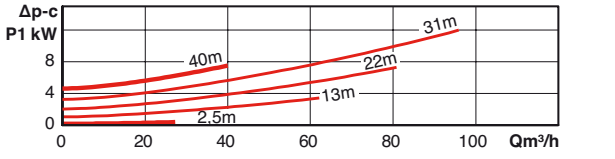

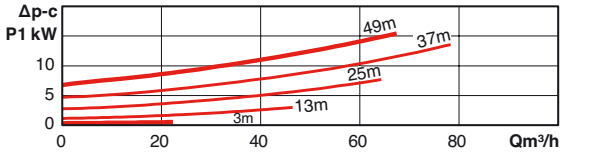

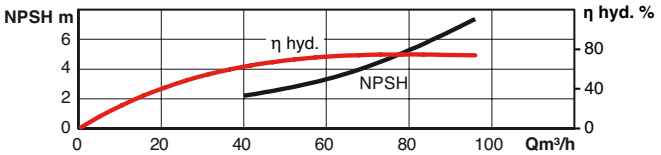

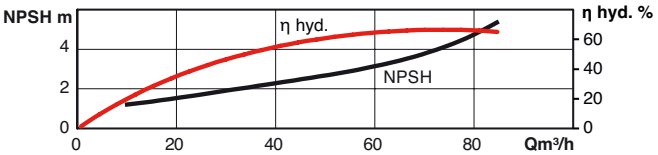

SIE

HYDRAULIC PERFORMANCES - 2 POLE

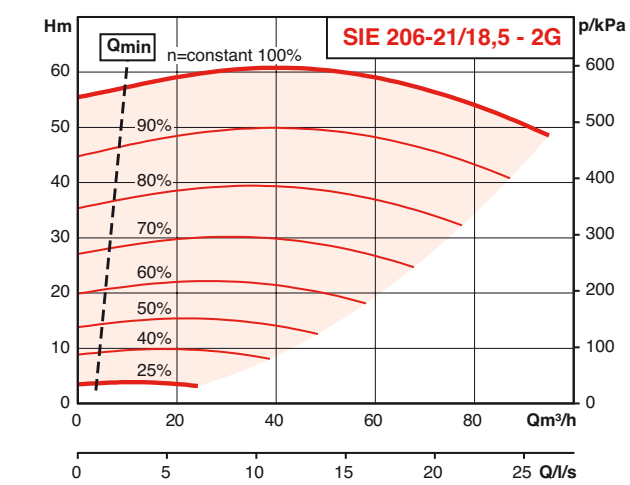

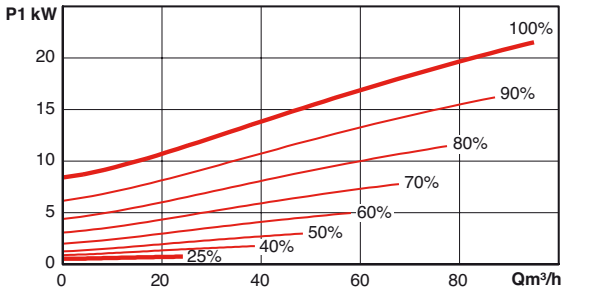

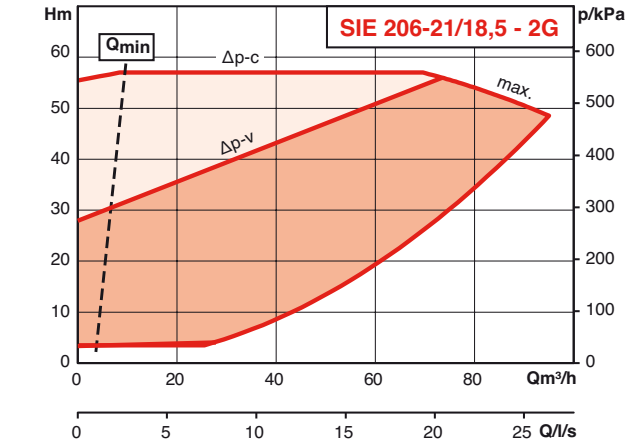

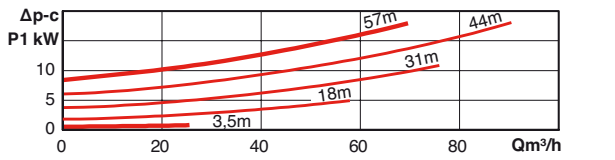

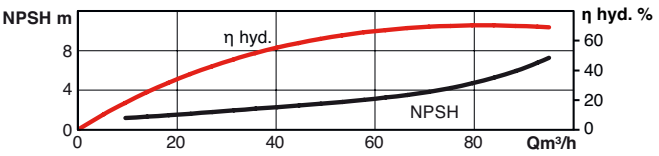

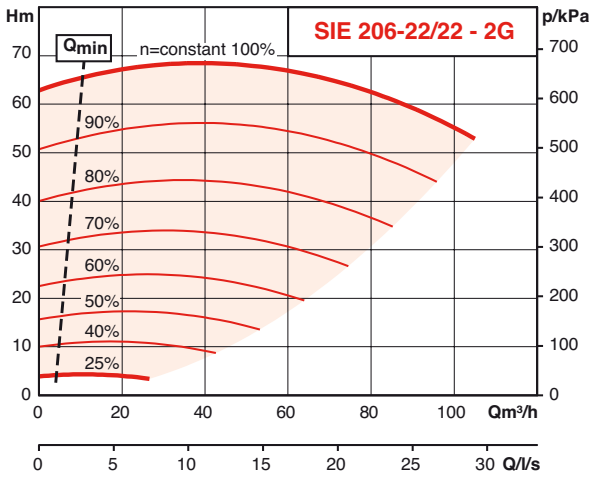

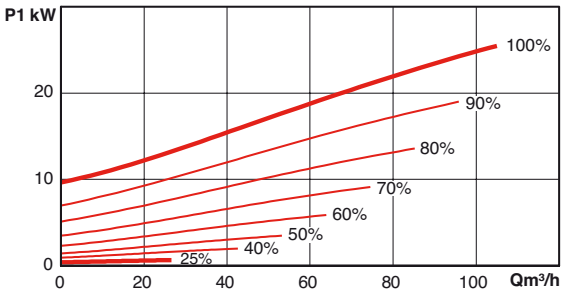

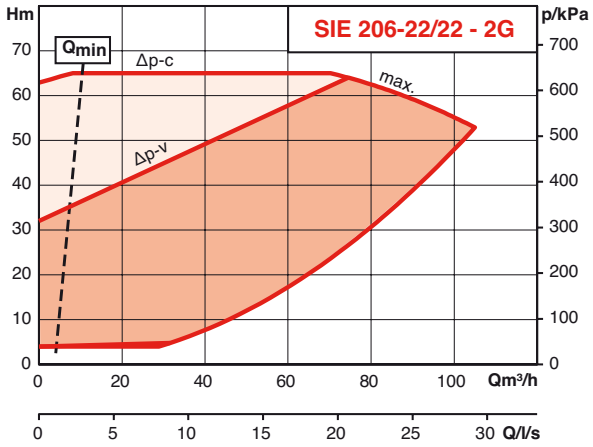

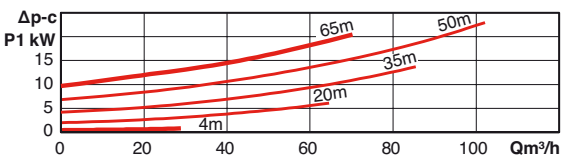

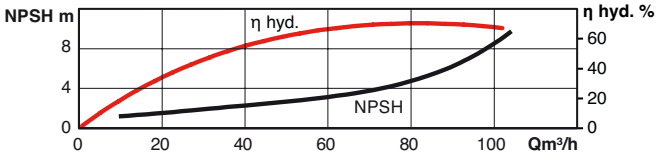

HYDRAULIC PERFORMANCES - 2 POLE

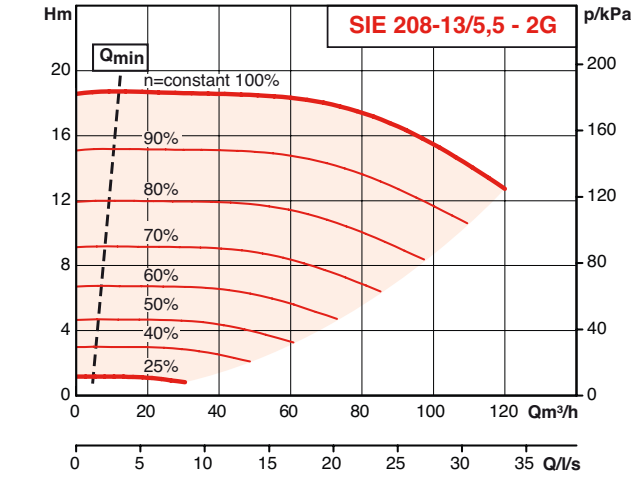

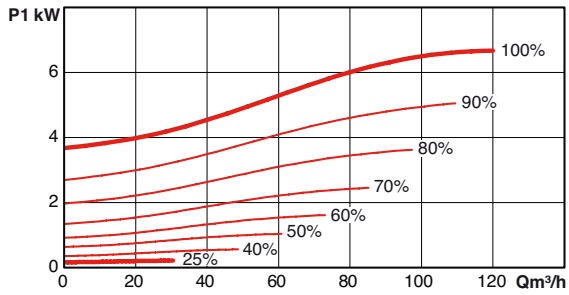

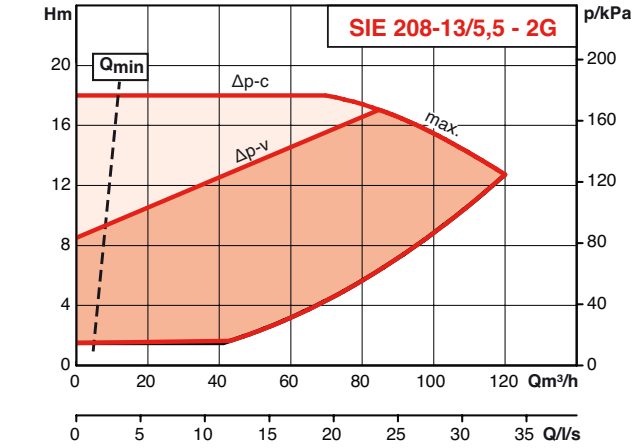

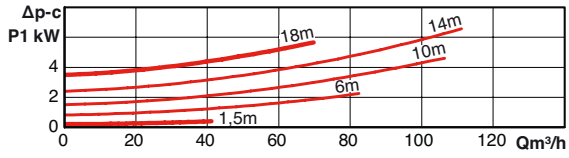

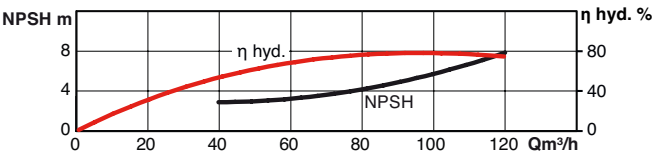

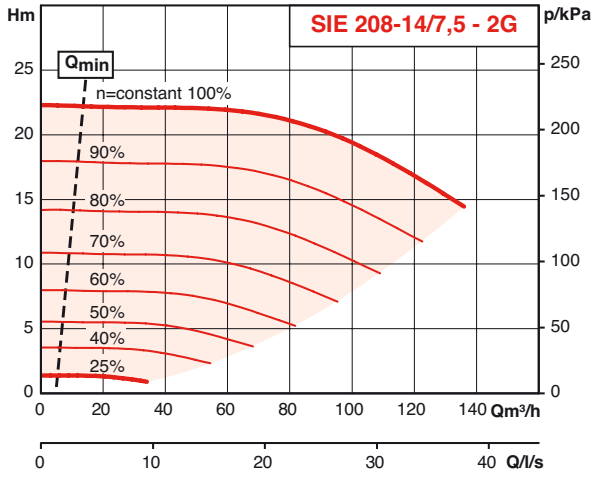

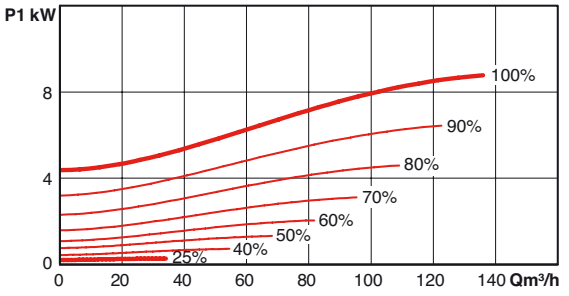

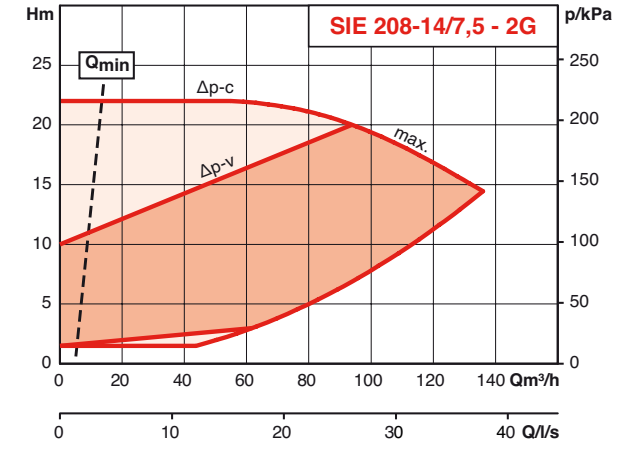

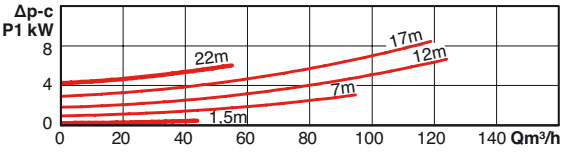

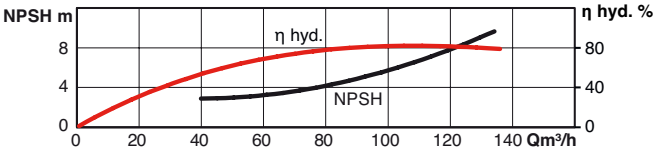

SIE

HYDRAULIC PERFORMANCES - 2 POLE

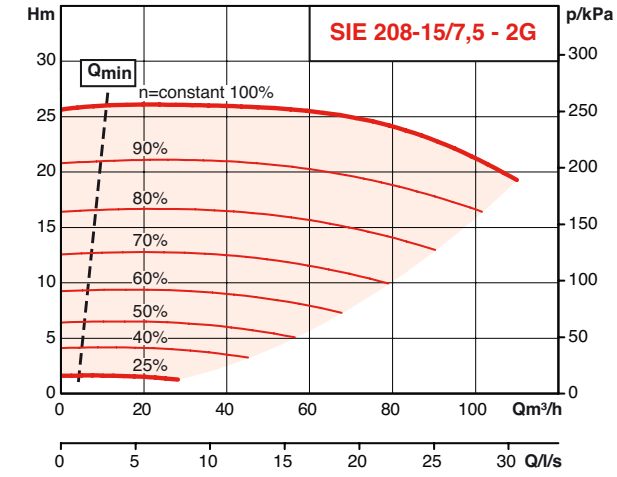

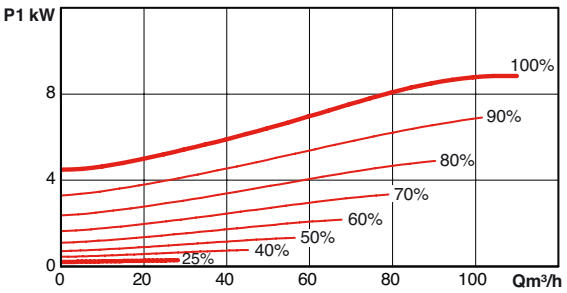

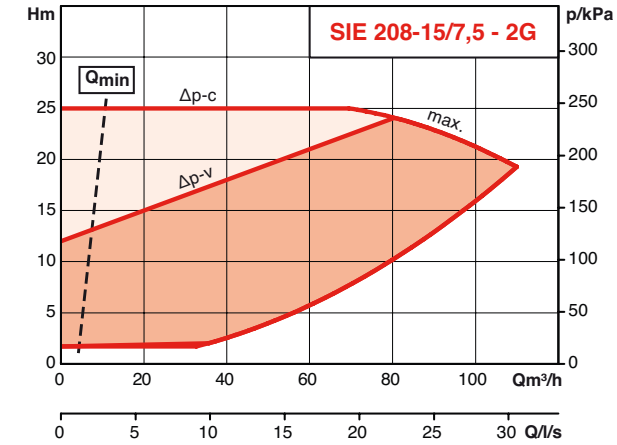

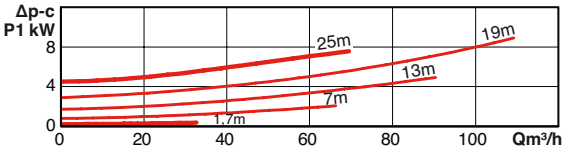

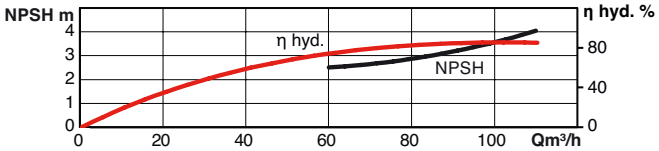

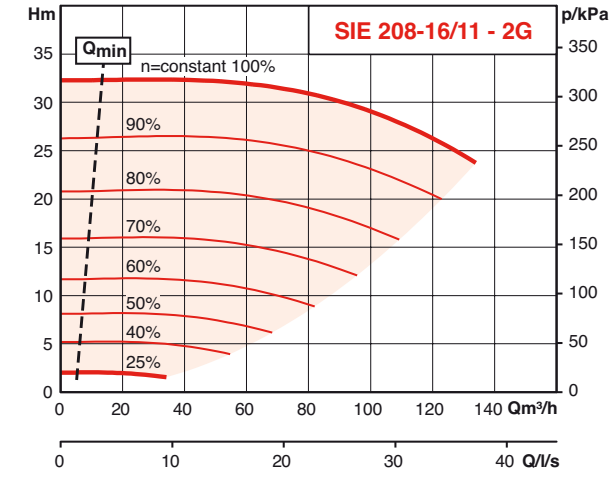

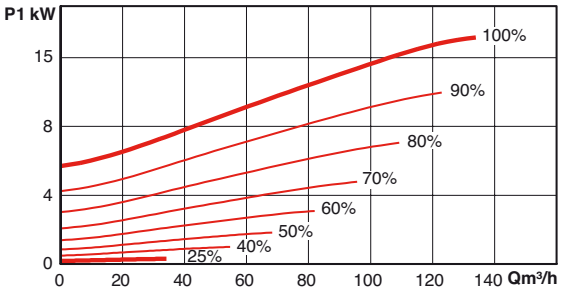

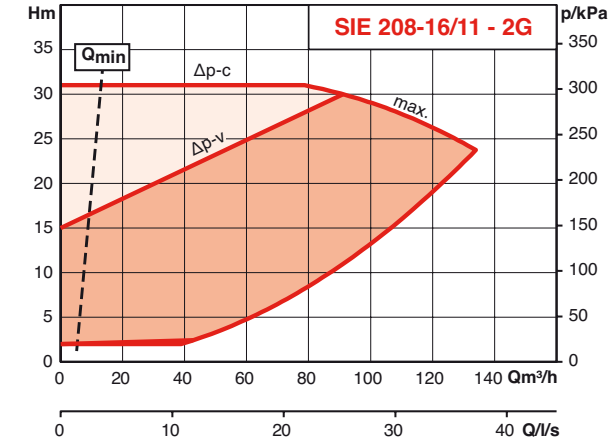

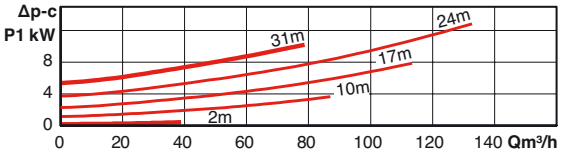

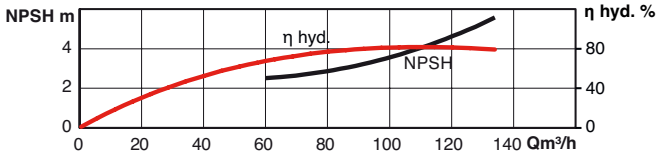

HYDRAULIC PERFORMANCES - 2 POLE

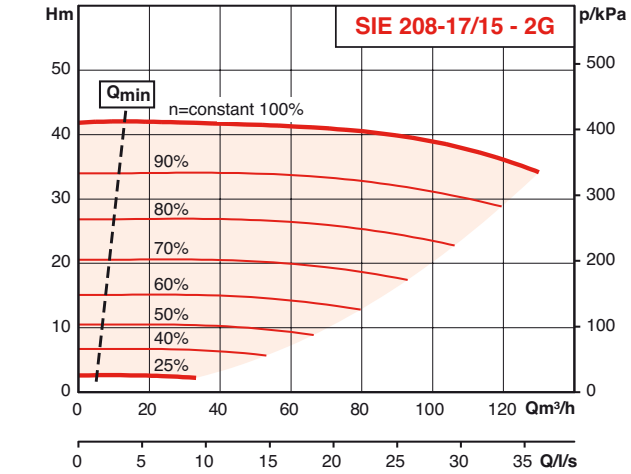

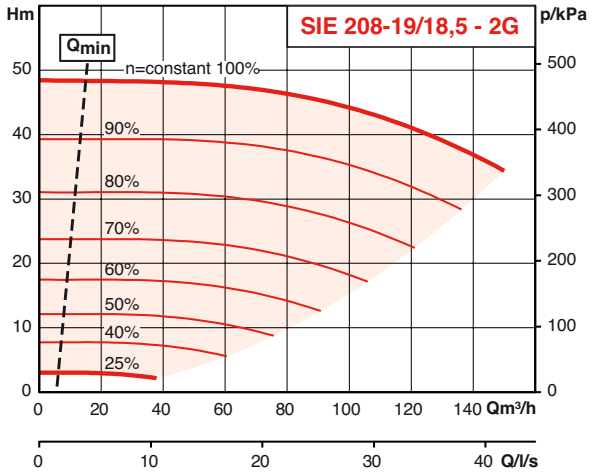

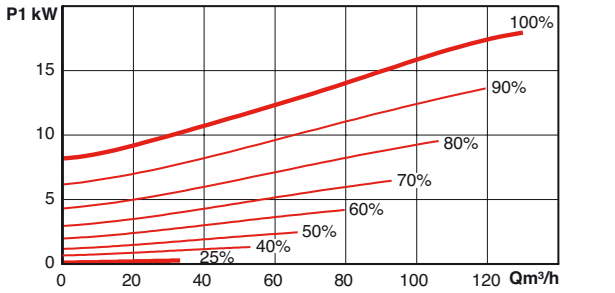

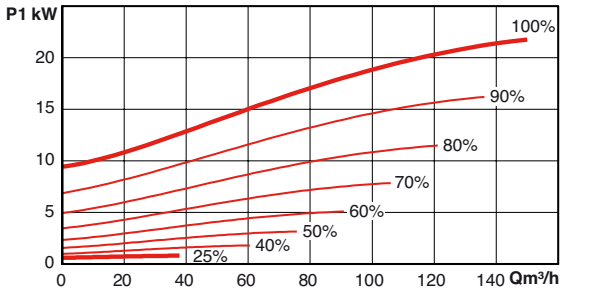

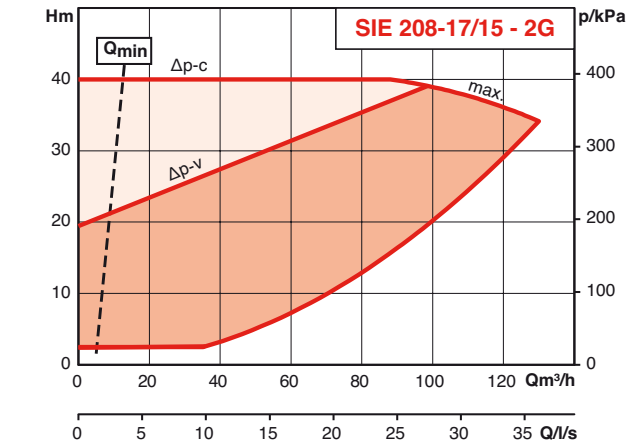

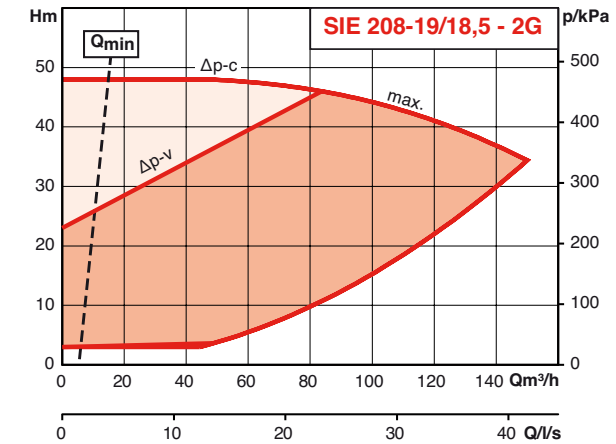

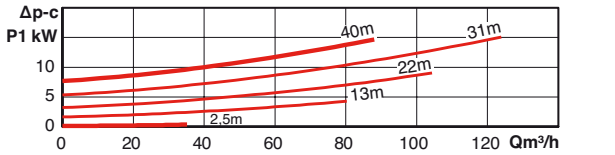

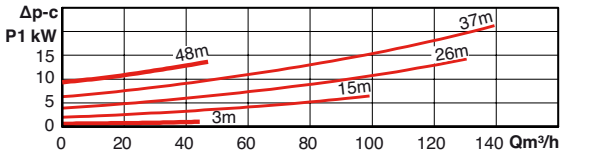

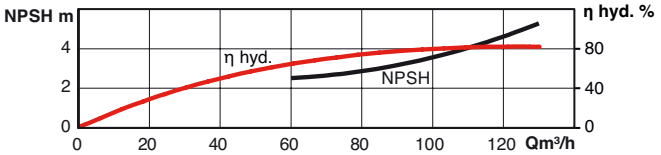

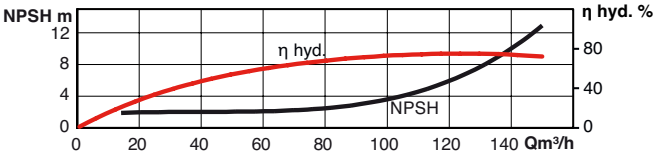

SIE

HYDRAULIC PERFORMANCES - 2 POLE

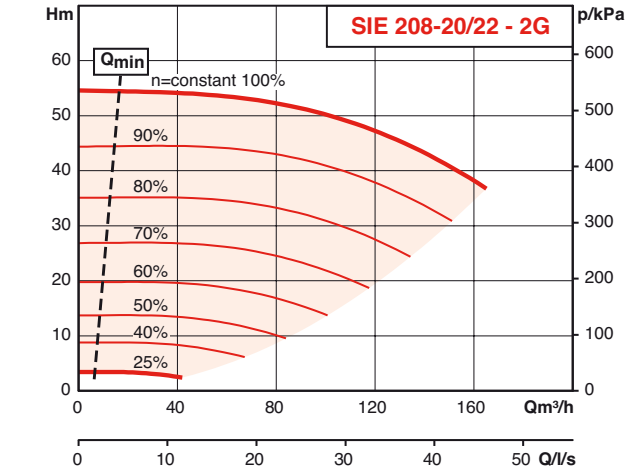

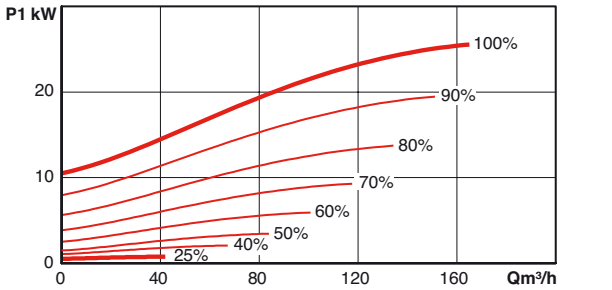

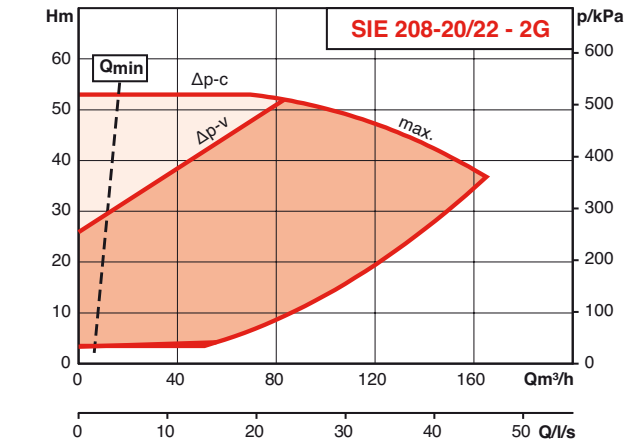

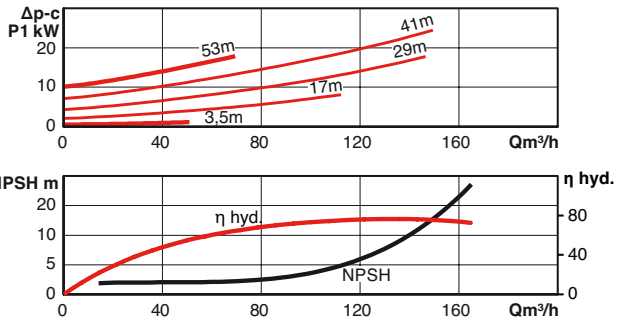

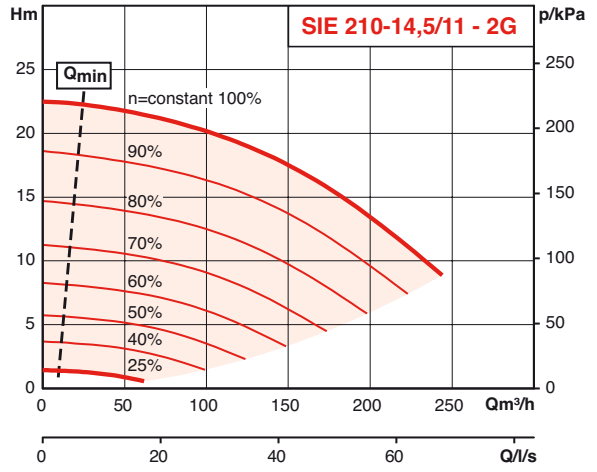

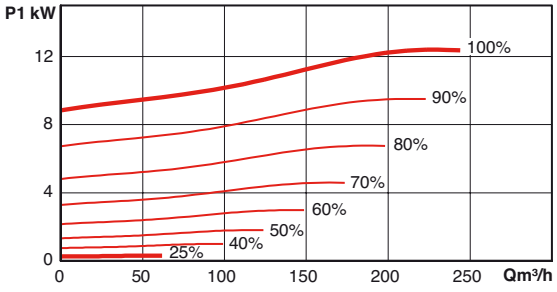

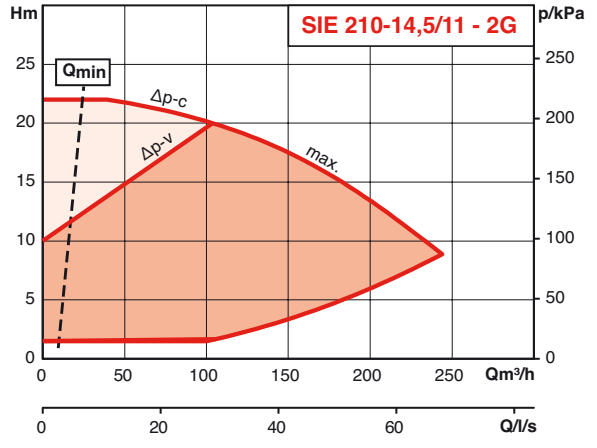

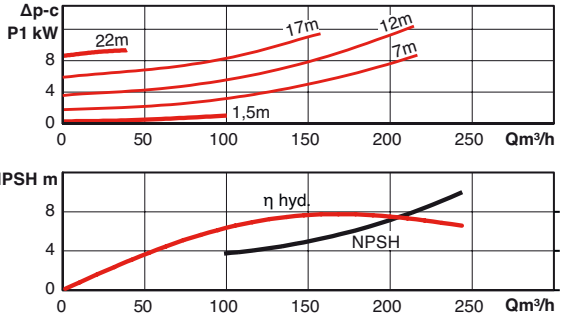

HYDRAULIC PERFORMANCES - 2 POLE

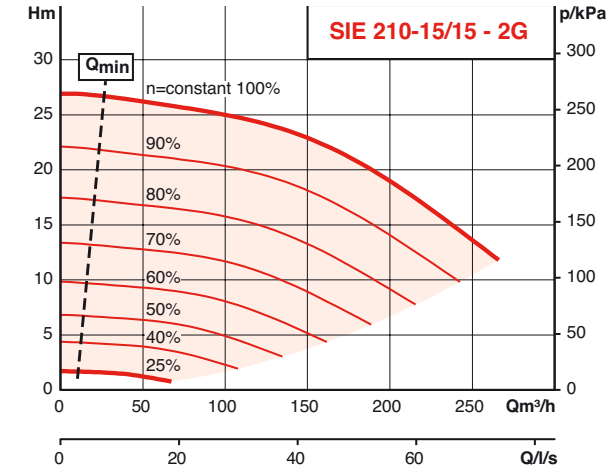

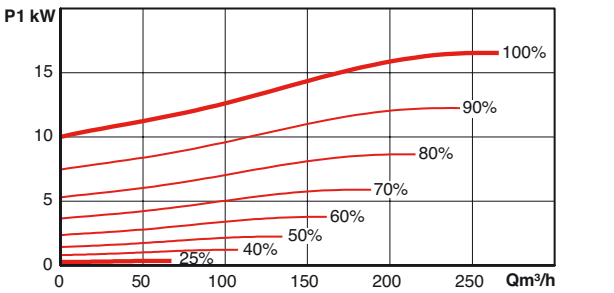

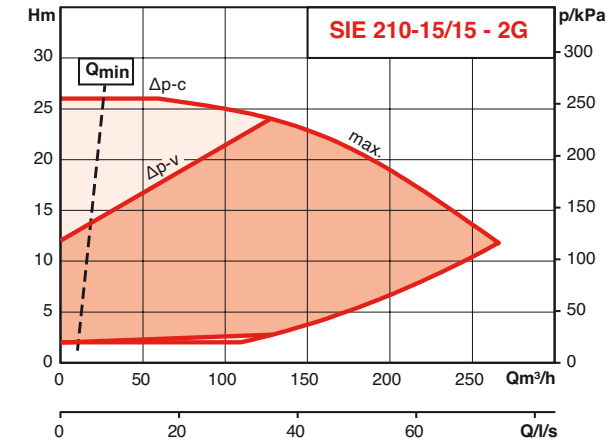

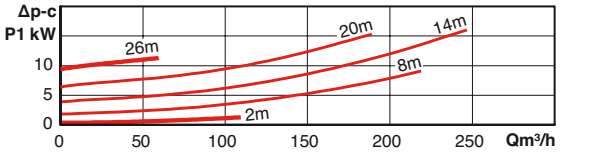

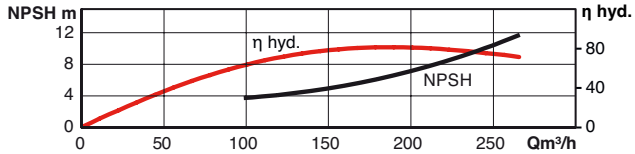

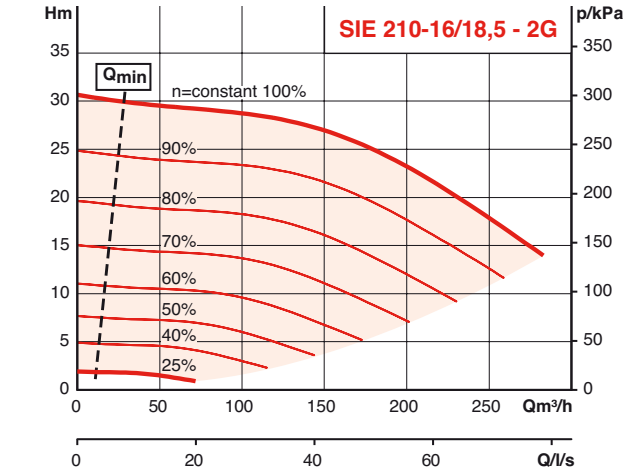

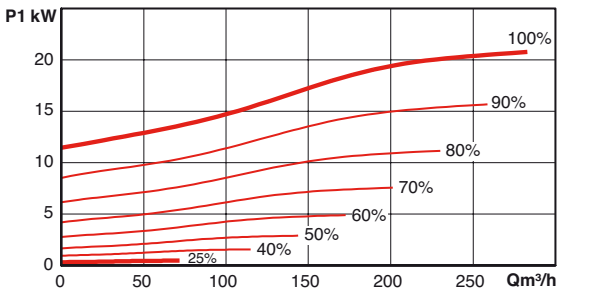

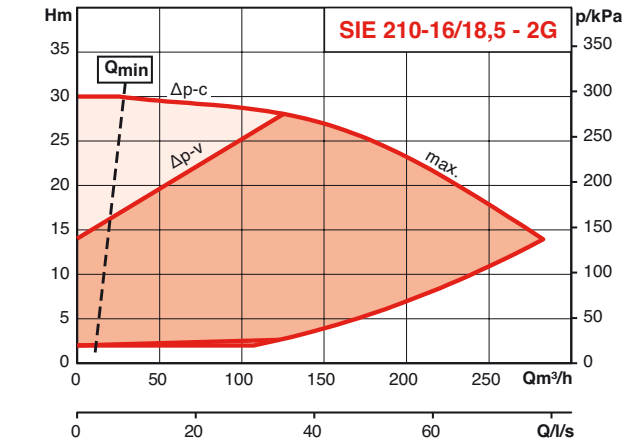

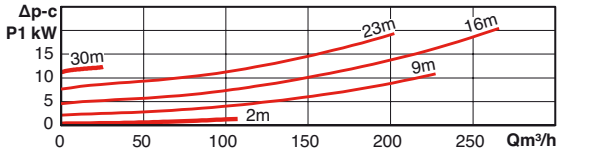

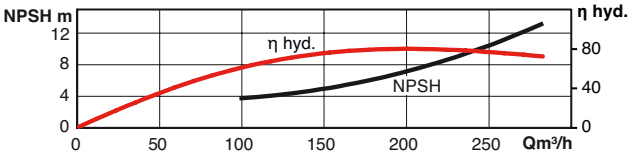

SIE

HYDRAULIC PERFORMANCES - 2 POLE

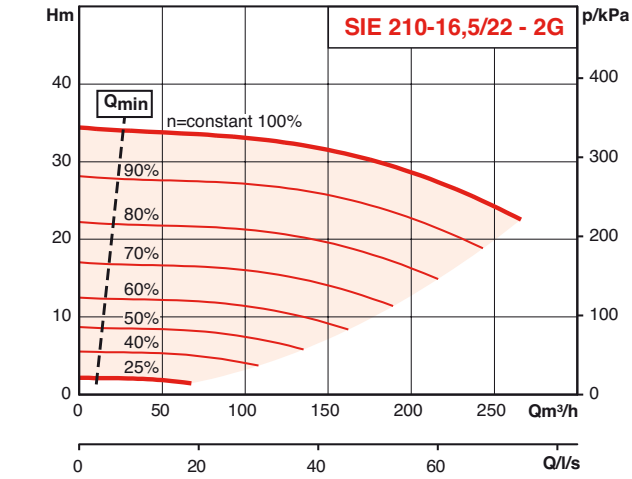

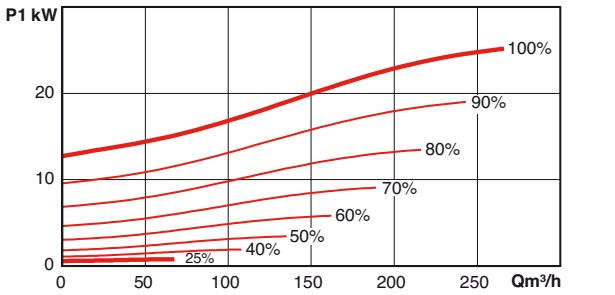

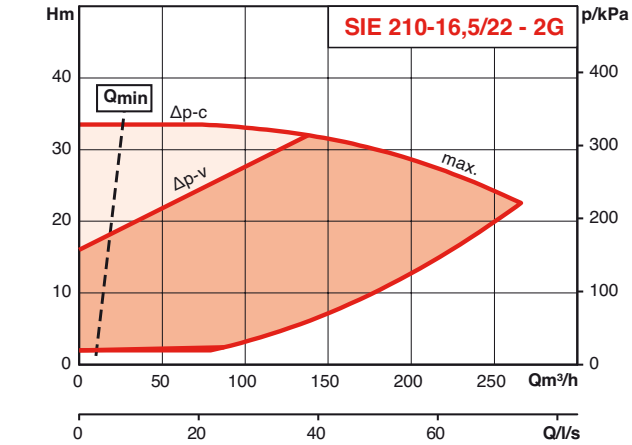

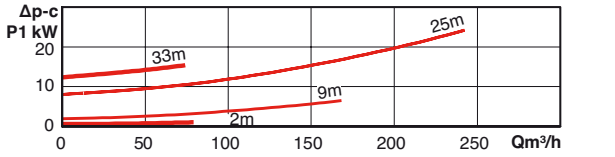

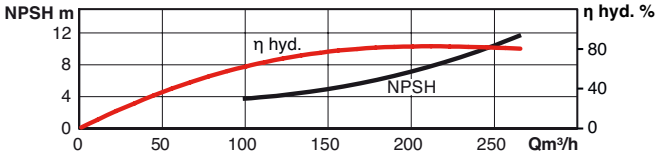

HYDRAULIC PERFORMANCES - 4 POLE

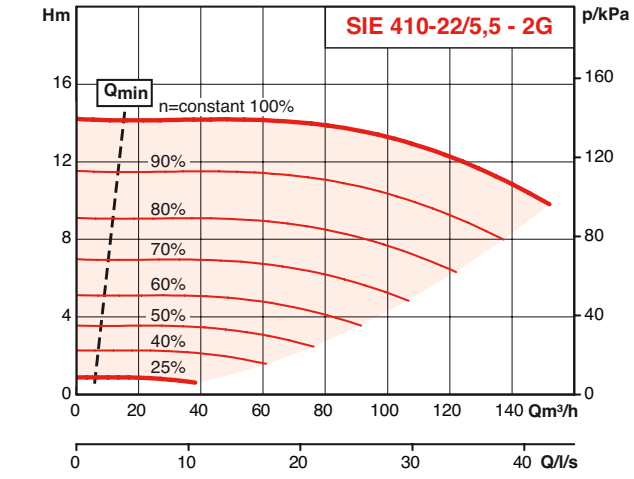

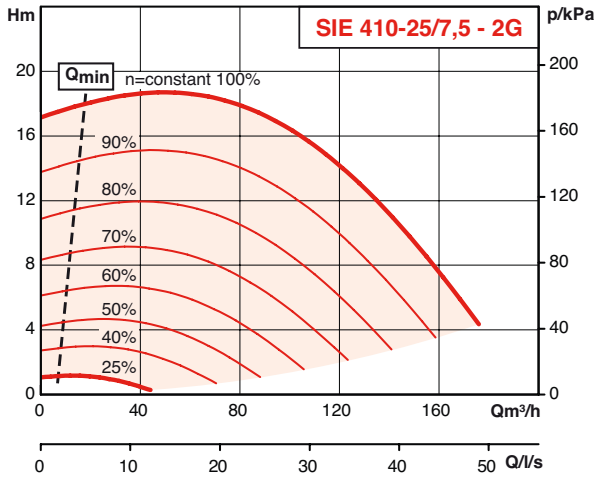

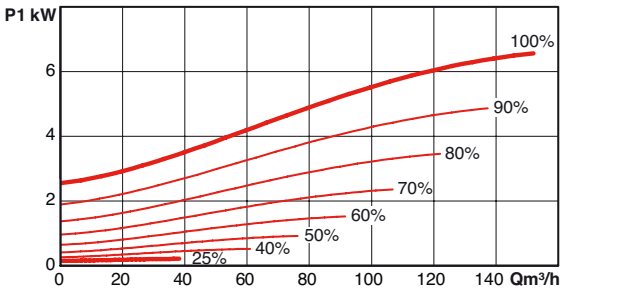

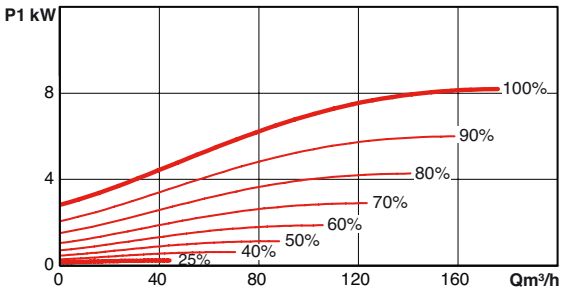

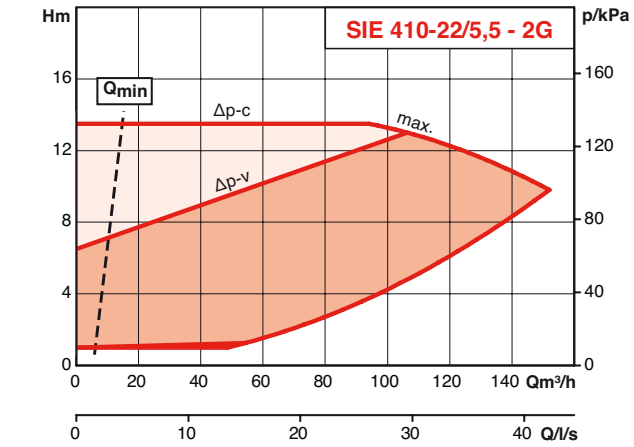

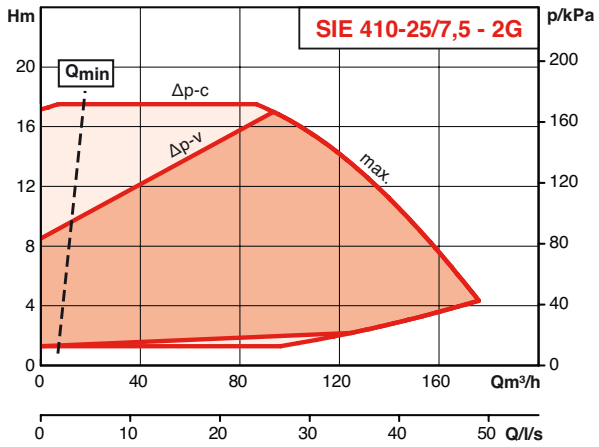

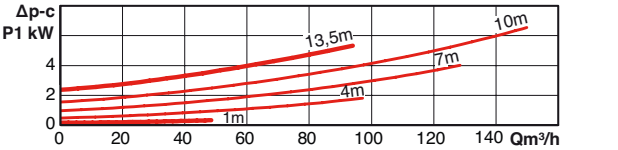

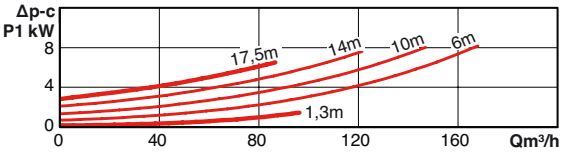

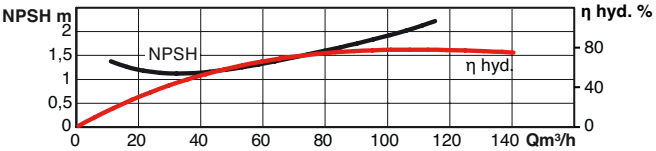

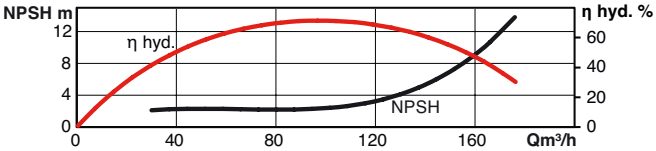

SIE

HYDRAULIC PERFORMANCES - 4 POLE

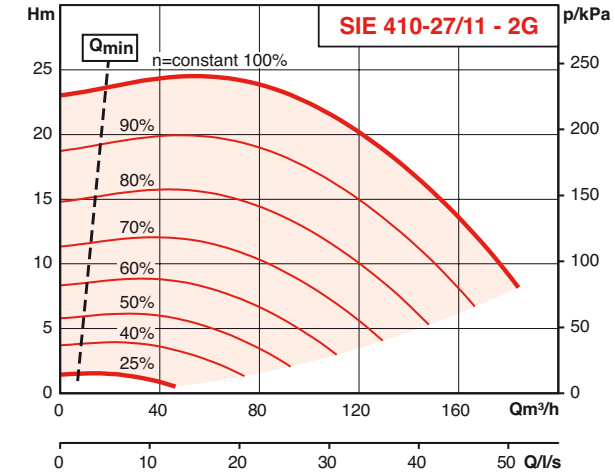

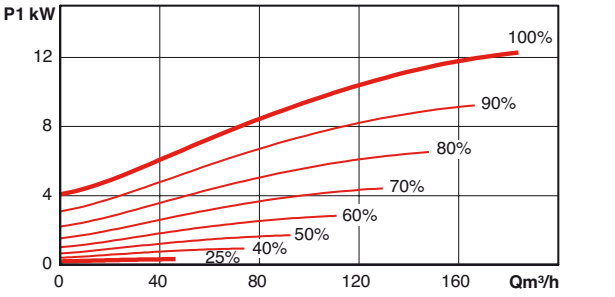

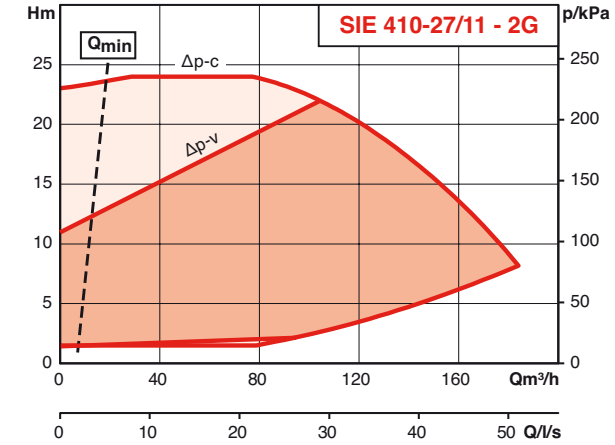

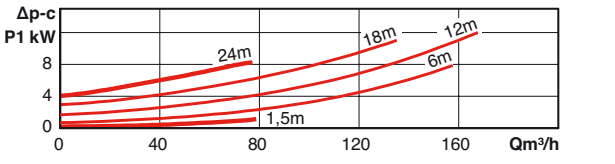

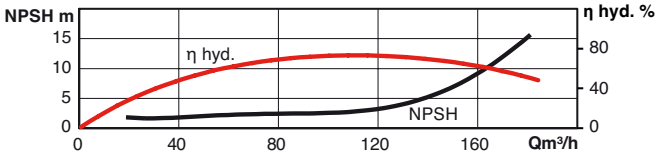

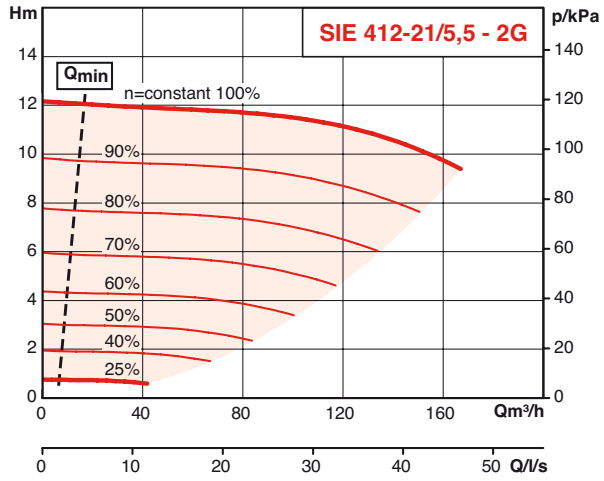

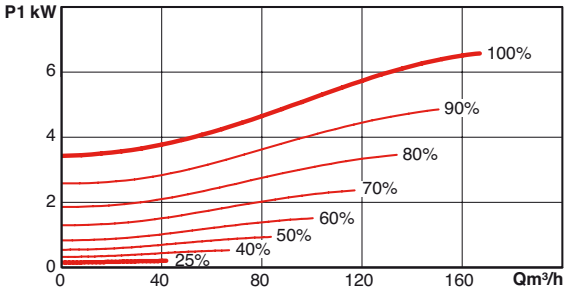

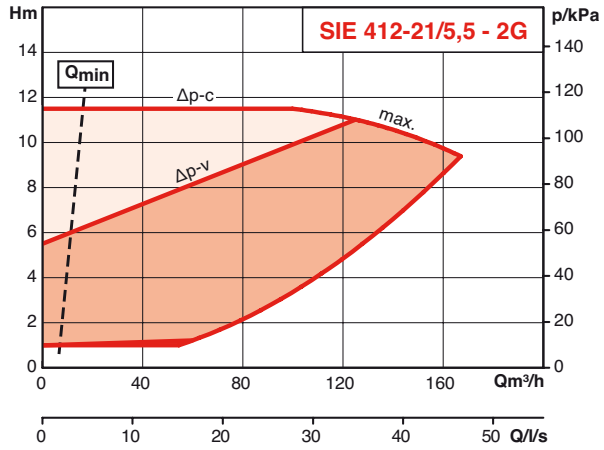

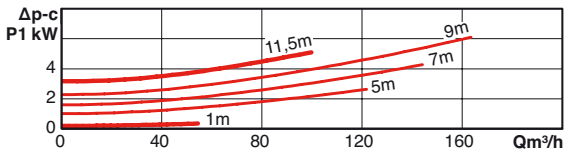

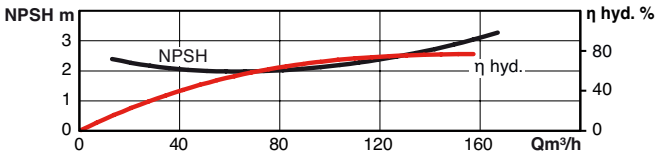

HYDRAULIC PERFORMANCES - 4 POLE

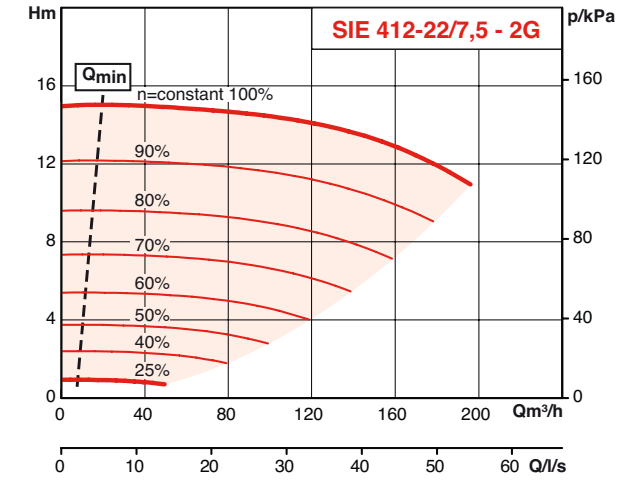

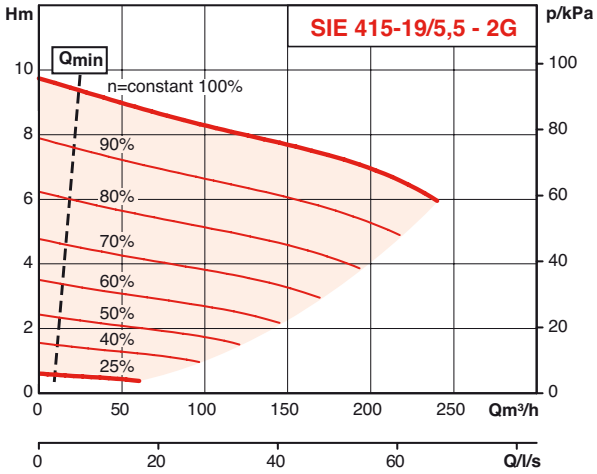

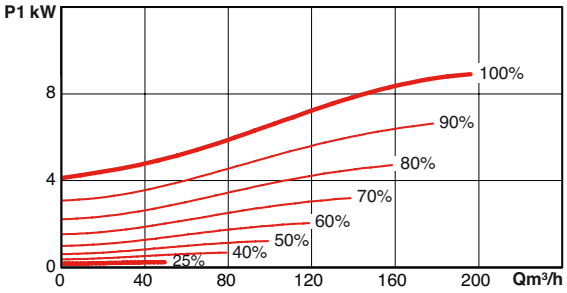

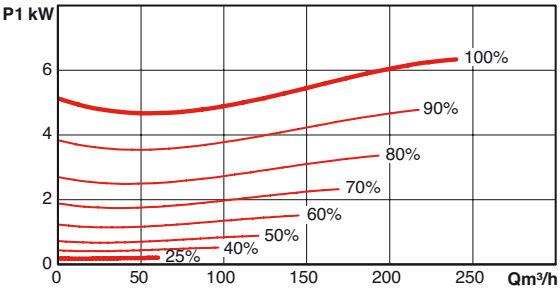

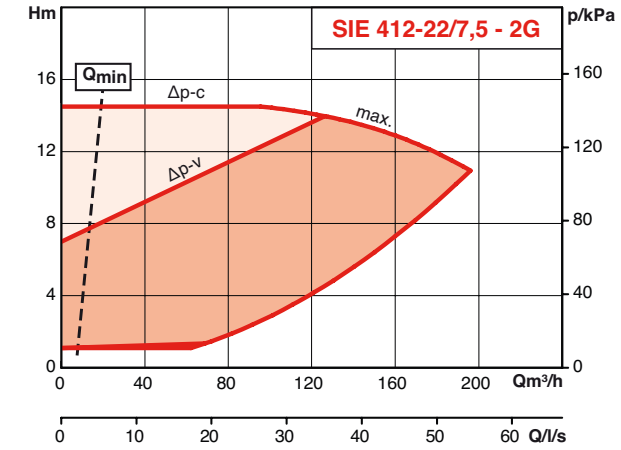

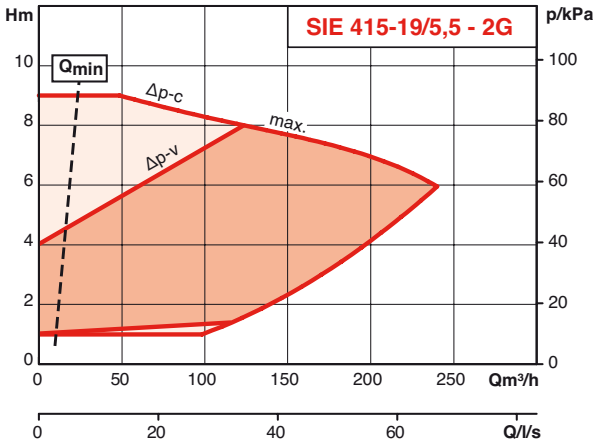

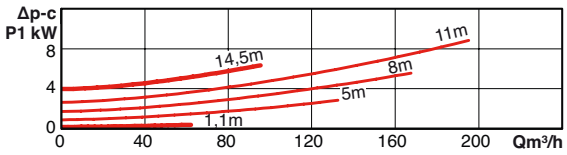

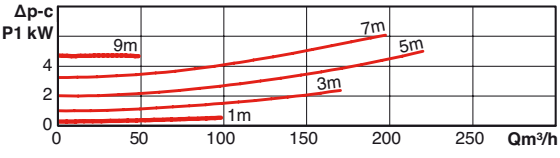

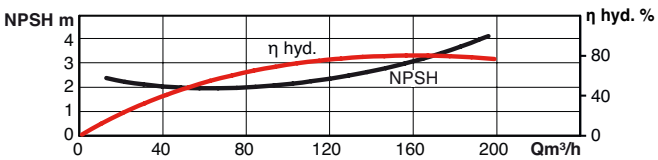

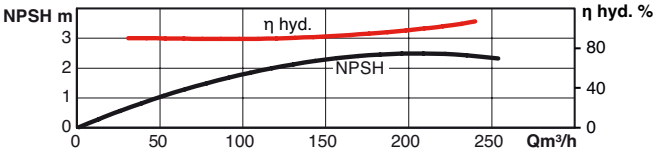

SIE

HYDRAULIC PERFORMANCES - 4 POLE

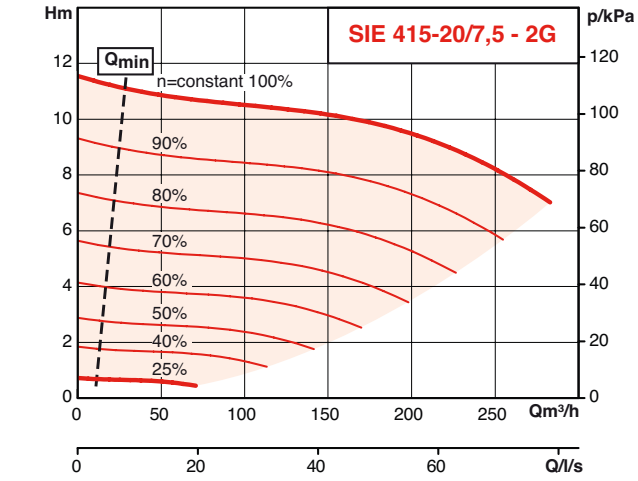

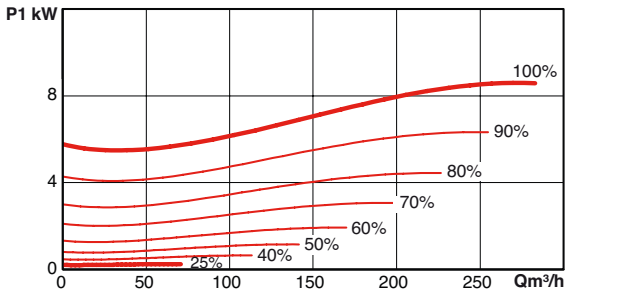

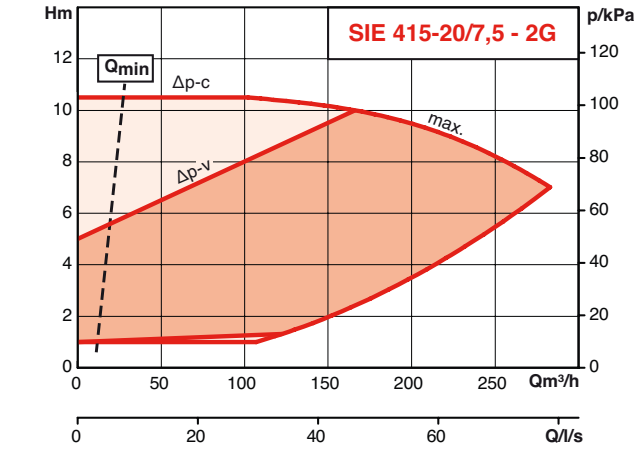

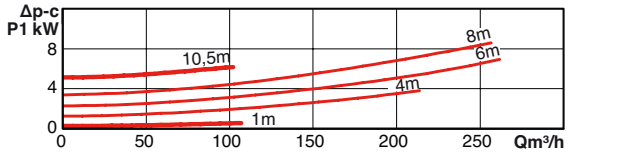

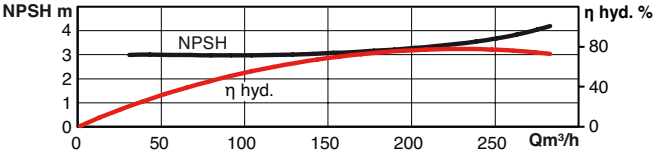

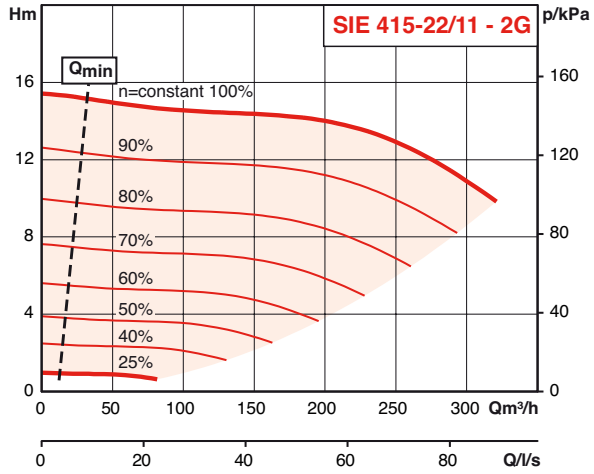

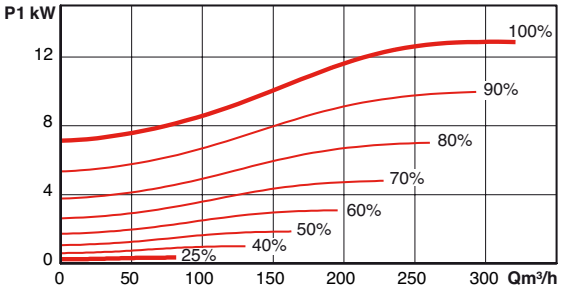

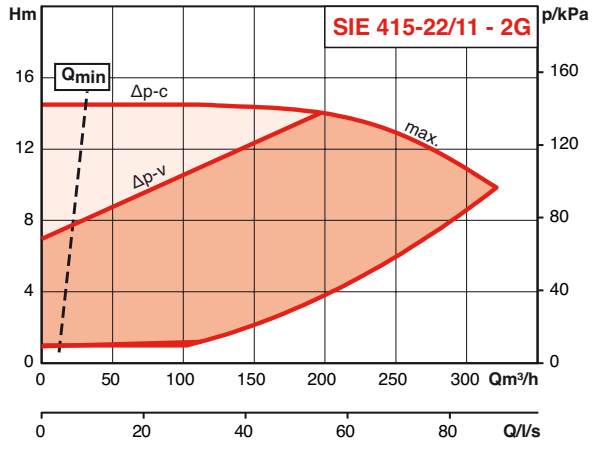

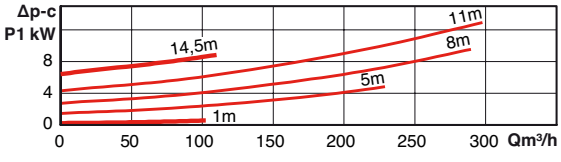

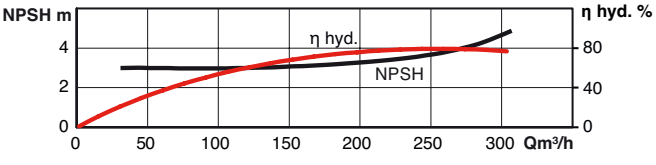

HYDRAULIC PERFORMANCES - 4 POLE

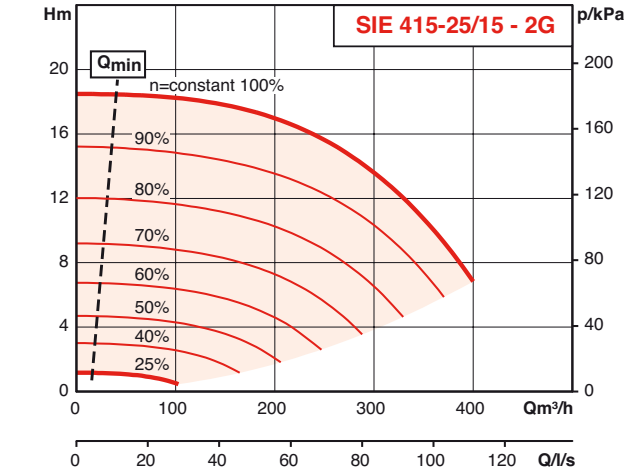

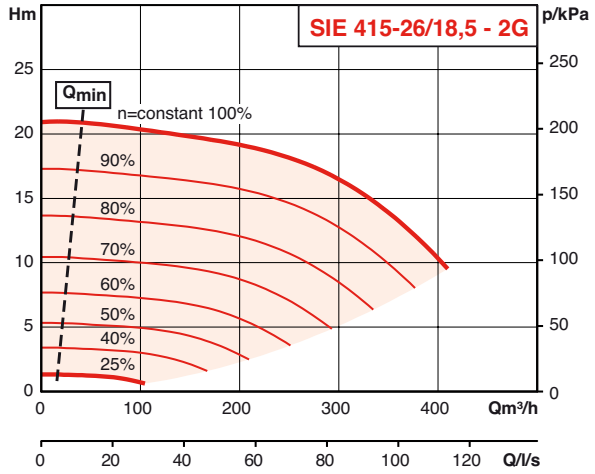

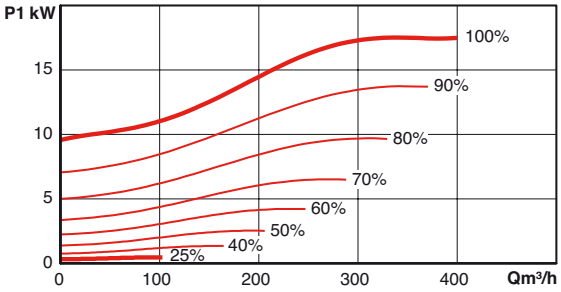

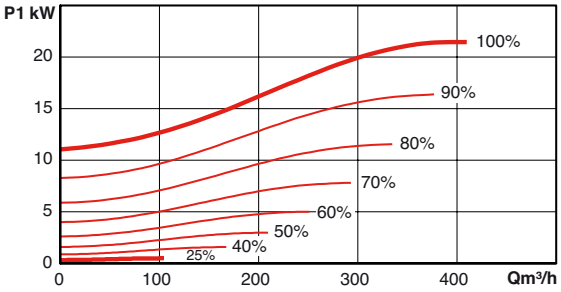

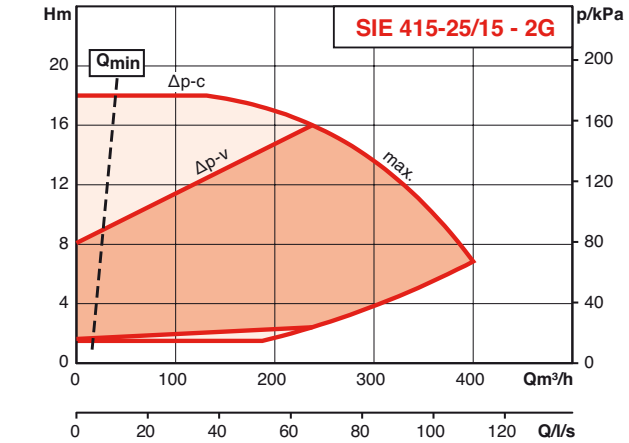

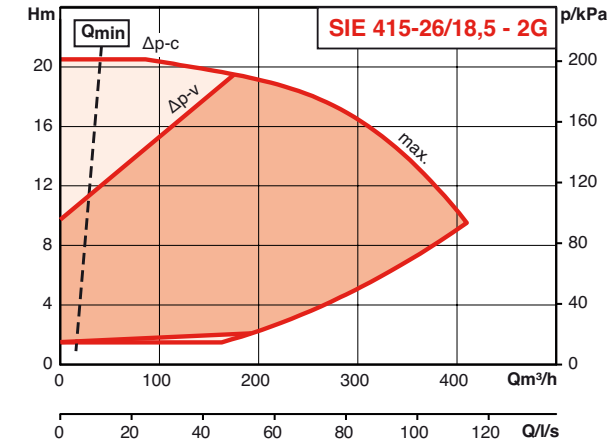

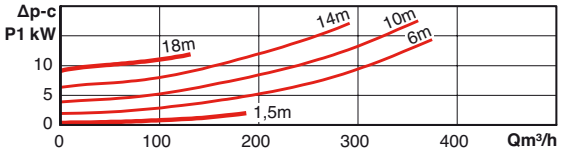

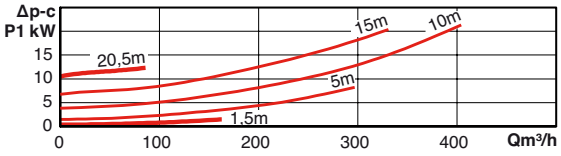

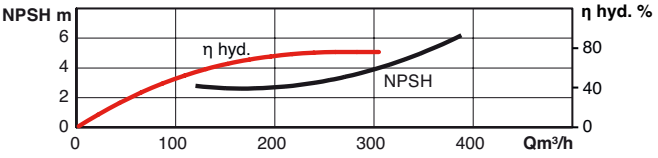

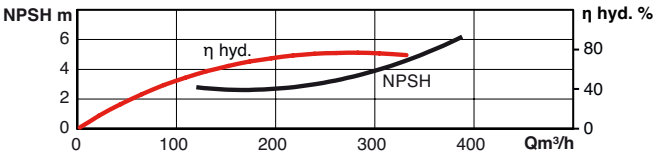

SIE

HYDRAULIC PERFORMANCES - 4 POLE

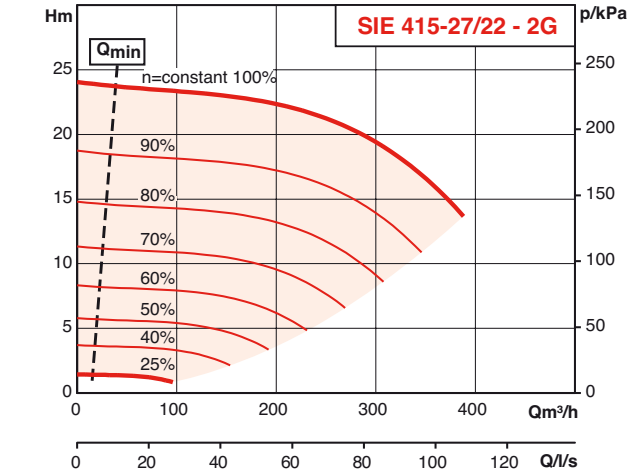

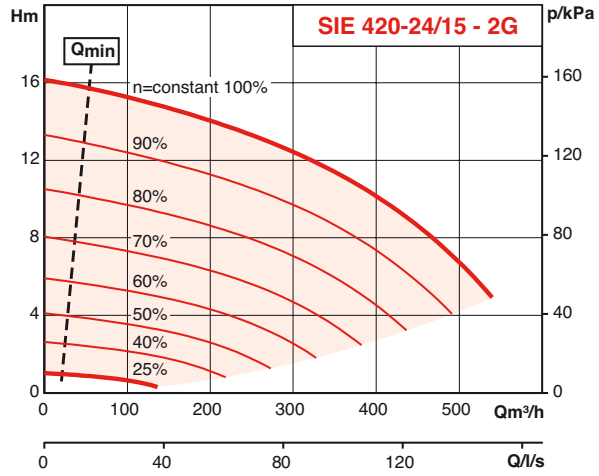

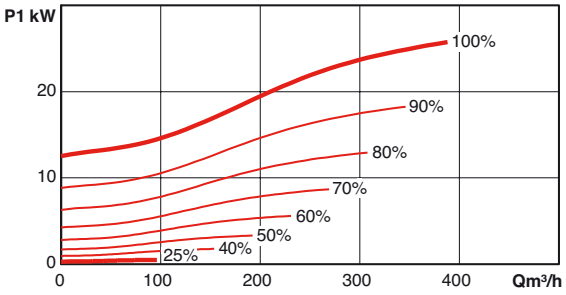

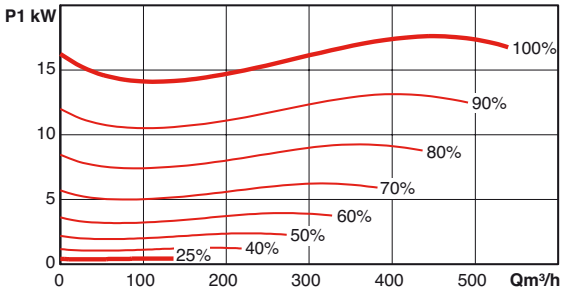

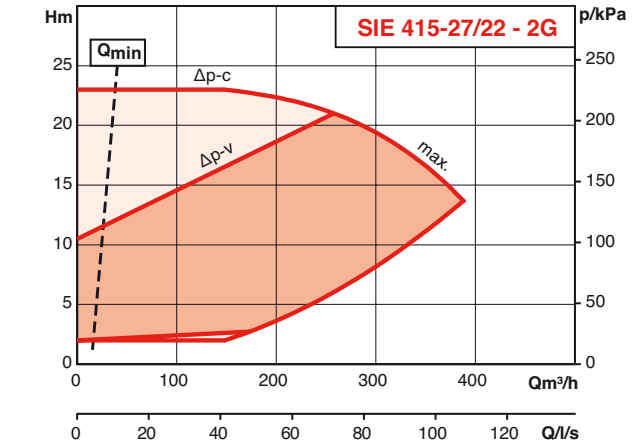

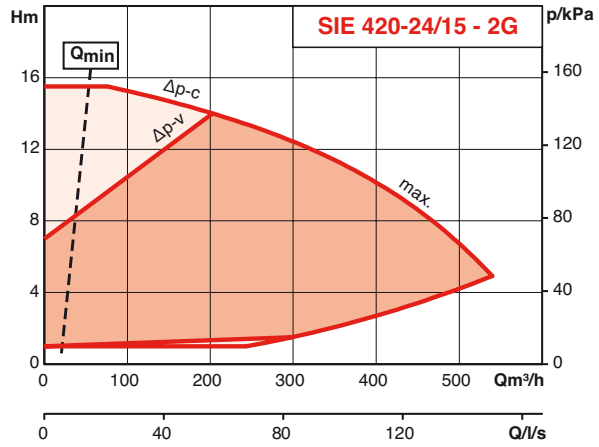

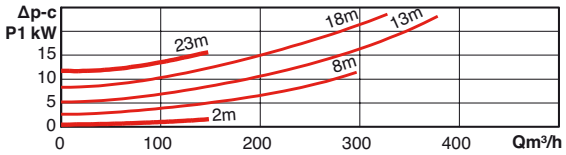

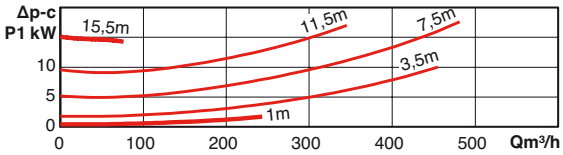

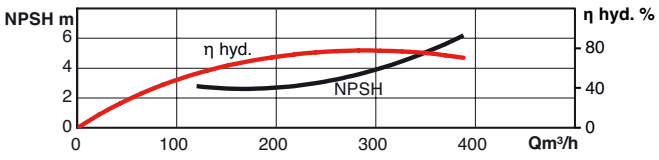

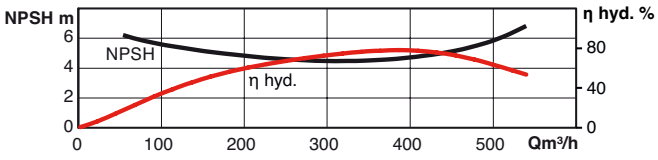

HYDRAULIC PERFORMANCES - 4 POLE

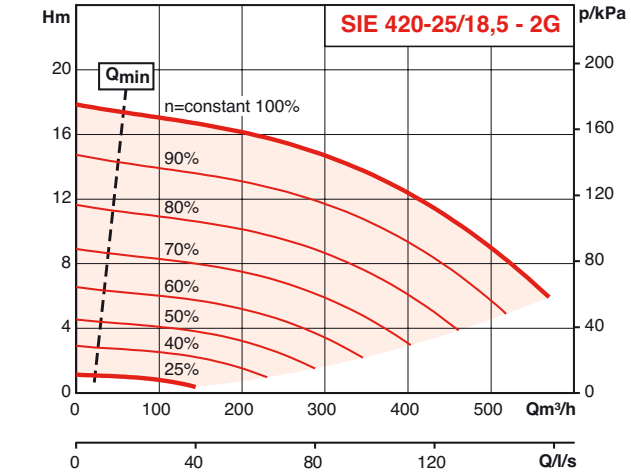

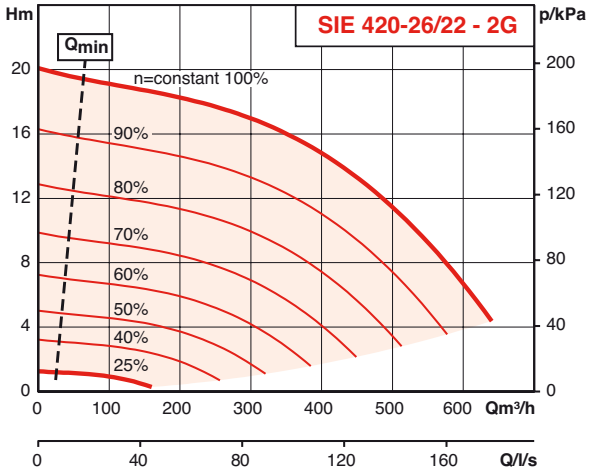

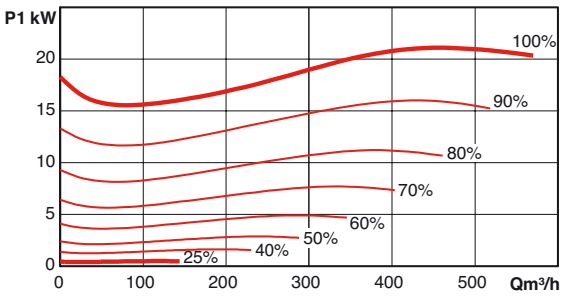

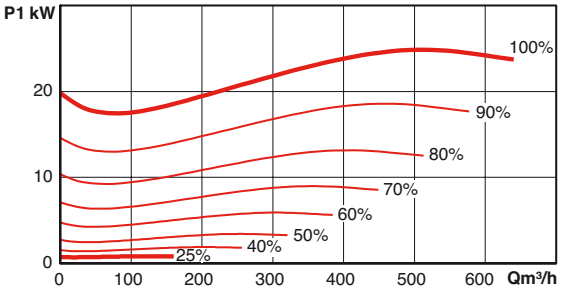

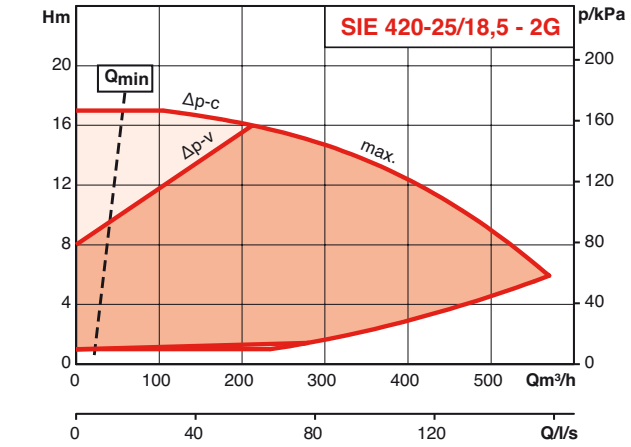

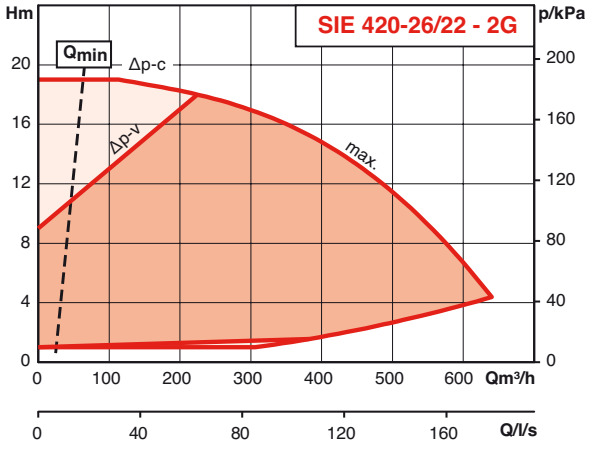

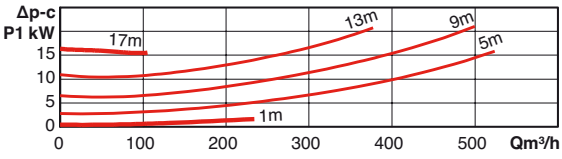

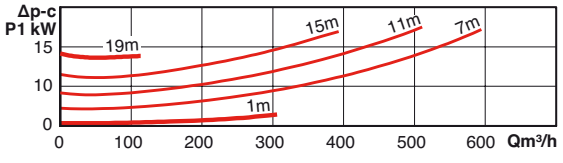

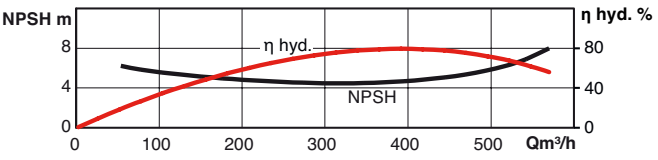

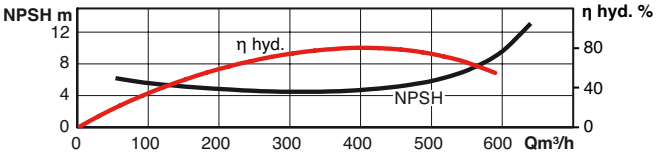

SIE

ELECTRICAL AND DIMENSIONAL FEATURES

• Dimensional diagram A

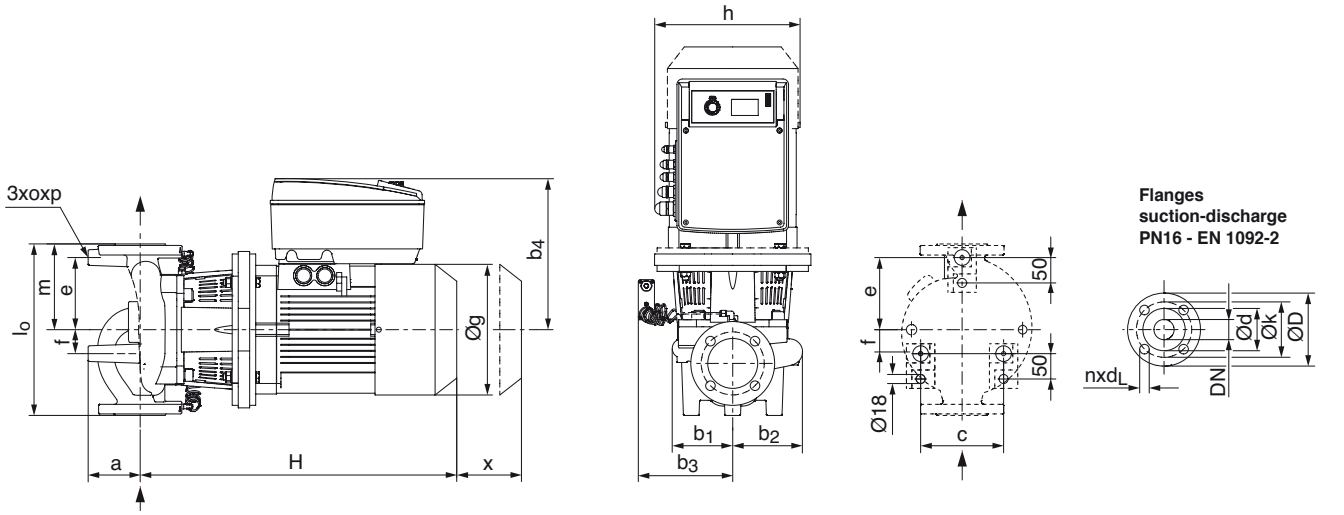

• Dimensional diagram B

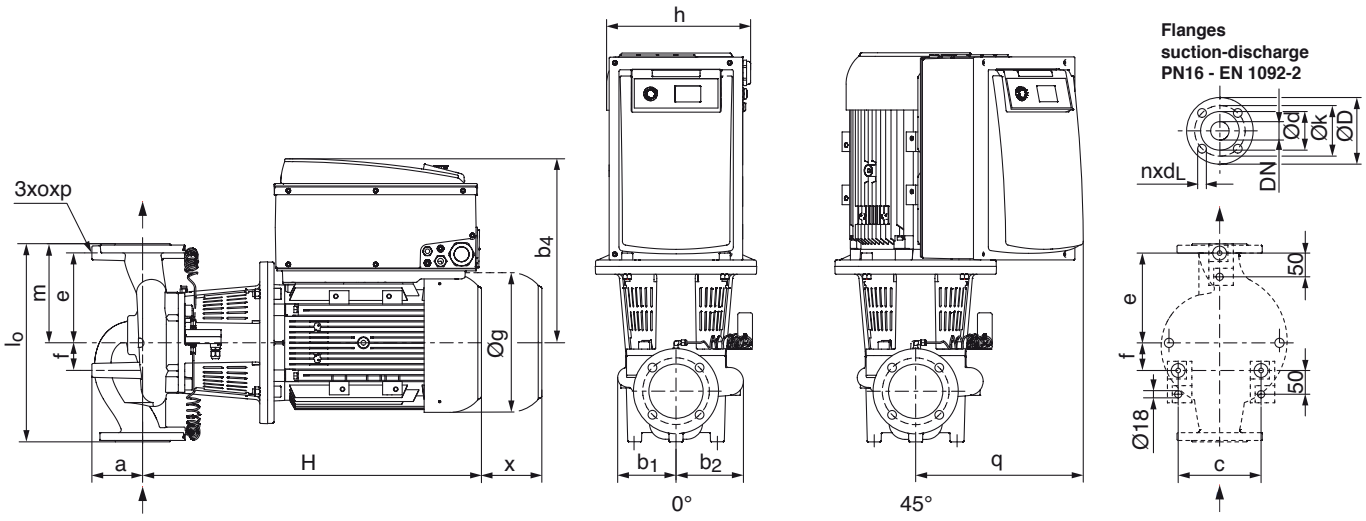

DN	ØD	Øk	Ød	holes
	mm	mm	mm	nxdL
40	150	110	84	4 x 19
50	165	125	99	4 x 19
65	185	145	118	4 x 19
80	200	160	132	8 x 19
100	220	180	156	8 x 19
125	250	210	184	8 x 19
150	285	240	211	8 x 23
200	340	295	266	12 x 23

ELECTRICAL AND DIMENSIONAL FEATURES

ORDER REFERENCE	MOTOR				PUMP																			
	P2	Speed	Consu. max. P1	nominal current	DN openings	a	b1	b2	b3	b4	q	h	l1	l0	c	e	f	m	o	p	x	Øg	mass	Diagram
	kW	rpm	kW	in A		mm	mm	mm	mm	mm	mm	mm	mm	mm	mm	mm	mm	mm	mm	mm	mm	mm	kg	
2 pole																								
SIE 204-17/5.5-2G	5500	750 - 2900	6700	11.2	40	82	113	129	186	303	303	260	593	340	130	149	58	170	M10	20	95	266	91	A
SIE 204-20/7.5-2G	7500	750 - 2900	8900	14.6	40	110	145	149	224	303	-	260	598	440	180	172	78	190	M10	20	100	266	108	A
SIE 204-22/11-2G	11000	750 - 2900	12700	20	40	110	145	149	-	427	-	320	721	440	180	172	78	190	M10	20	100	302	181	B
SIE 205-16/5.5-2G	5500	750 - 2900	6600	11	50	103	120	138	186	303	-	260	600	340	164	143	48	170	M10	20	100	266	98	A
SIE 205-17/7.5-2G	7500	750 - 2900	8900	14.3	50	103	120	138	186	303	303	260	600	340	164	143	48	170	M10	20	100	266	105	A
SIE 205-18/7.5-2G	7500	750 - 2900	8900	14.5	50	120	145	150	215	303	-	260	599	440	160	170	70	190	M10	20	100	266	105	A
SIE 205-21/11-2G	11000	750 - 2900	12900	20.4	50	120	145	150	-	427	-	320	722	440	160	170	70	190	M10	20	100	302	181	B
SIE 205-22/15-2G	15000	750 - 2900	17700	27.1	50	120	145	150	-	427	-	320	722	440	160	170	70	190	M10	20	100	302	181	B
SIE 206-15/5.5-2G	5500	750 - 2900	6600	11.1	65	110	126	146	186	303	303	260	606	430	180	195	60	215	M12	20	120	266	99	A
SIE 206-16/7.5-2G	7500	750 - 2900	8900	14.5	65	110	126	146	186	303	-	260	606	430	180	195	60	215	M12	20	120	266	115	A
SIE 206-17/11-2G	11000	750 - 2900	12300	19.8	65	110	126	146	-	-	416	320	738	430	180	195	60	215	M12	20	120	302	188	B
SIE 206-20/15-2G	15000	750 - 2900	17500	27.1	65	130	150	168	-	427	-	320	731	475	200	225	50	245	M12	20	110	302	181	B
SIE 206-21/18.5-2G	18500	750 - 2900	21400	33.7	65	130	150	168	-	427	-	320	731	475	200	225	50	245	M12	20	110	302	181	B
SIE 206-22/22-2G	22000	750 - 2900	25400	38.5	65	130	150	168	-	427	-	320	731	475	200	225	50	245	M12	20	110	302	181	B
SIE 208-13/5.5-2G	5500	750 - 2900	6700	11.5	80	105	123	151	171	303	-	260	621	400	180	173	57	200	M12	20	120	266	107,4	A
SIE 208-14/7.5-2G	7500	750 - 2900	8900	14.1	80	105	123	151	171	303	303	260	604	400	180	173	57	200	M12	20	120	266	103	A
SIE 208-15/7.5-2G	7500	750 - 2900	8800	14.5	80	120	136	162	186	303	-	260	601	440	180	173	72	200	M12	20	120	266	114	A
SIE 208-16/11-2G	11000	750 - 2900	13000	21.3	80	120	136	162	-	-	416	320	735	440	180	173	72	200	M12	20	120	302	181	B
SIE 208-17/15-2G	15000	750 - 2900	17900	27.4	80	120	136	162	-	-	416	320	735	440	180	173	72	200	M12	20	120	302	181	B
SIE 208-19/18.5-2G	18500	750 - 2900	21700	34.8	80	145	157	182	-	427	-	320	739	500	220	208	62	230	M12	20	120	302	209	B
SIE 208-20/22-2G	22000	750 - 2900	25600	39.7	80	145	157	182	-	427	-	320	739	500	220	208	62	230	M12	20	120	302	181	B
SIE 210-14.5/11-2G	11000	750 - 2900	12400	20	100	120	159	197	-	-	416	320	770	500	200	226	60	250	M12	20	135	302	181	B
SIE 210-15/15-2G	15000	750 - 2900	16600	26	100	120	159	197	-	-	416	320	770	500	200	226	60	250	M12	20	135	302	181	B
SIE 210-16/18.5-2G	18500	750 - 2900	20800	32.7	100	120	159	197	-	-	416	320	770	500	200	226	60	250	M12	20	135	302	261	B
SIE 210-16.5/22-2G	22000	750 - 2900	25200	39	100	120	159	197	-	-	416	320	770	500	200	226	60	250	M12	20	135	302	181	B
4 pole																								
SIE 410-22/5.5-2G	5500	380 - 1450	6600	11	100	155	173	202	224	303	-	260	626	550	220	231	99	255	M12	20	120	266	139	A
SIE 410-25/7.5-2G	7500	380 - 1450	8300	13.4	100	180	188	214	242	303	-	260	626	550	240	236	114	260	M12	20	120	266	158	A
SIE 410-27/11-2G	11000	380 - 1450	12300	19.6	100	180	188	214	-	427	-	320	749	550	240	236	114	260	M12	20	120	302	181	B
SIE 412-21/5.5-2G	5500	380 - 1450	6600	11	125	175	177	212	224	303	-	260	639	620	280	266	54	280	M16	25	120	266	151	A
SIE 412-22/7.5-2G	7500	380 - 1450	8900	14	125	175	177	212	224	303	-	260	639	620	280	266	54	280	M16	25	120	266	162	A
SIE 415-19/5.5-2G	5500	380 - 1450	6400	10.6	150	200	202	249	224	303	-	260	651	700	260	284	116	310	M16	25	130	266	185	A
SIE 415-20/7.5-2G	7500	380 - 1450	8700	13.9	150	200	202	249	224	303	-	260	651	700	260	284	116	310	M16	25	130	266	192	A
SIE 415-22/11-2G	11000	380 - 1450	13000	20.9	150	200	202	249	-	427	-	320	774	700	260	284	116	310	M16	25	130	302	181	B
SIE 415-25/15-2G	15000	380 - 1450	17900	28	150	230	278	320	-	427	-	320	793	700	288	304	146	330	M16	25	135	302	181	B
SIE 415-26/18.5-2G	18500	380 - 1450	21700	34.3	150	230	278	320	-	475	-	320	854	700	288	304	146	330	M16	25	135	370	181	B
SIE 415-27/22-2G	22000	380 - 1450	24900	39.2	150	230	278	320	-	475	-	320	854	700	288	304	146	330	M16	25	135	370	181	B
SIE 420-24/15-2G	15000	380 - 1450	17900	27.9	200	245	281	362	-	427	-	320	818	800	330	270	165	370	M16	25	140	302	384	B
SIE 420-25/18.5-2G	18500	380 - 1450	21200	33.3	200	245	281	362	-	475	-	320	879	800	330	270	165	370	M16	25	140	370	181	B
SIE 420-26/22-2G	22000	380 - 1450	24900	39	200	245	281	362	-	475	-	320	879	800	330	270	165	370	M16	25	140	370	181	B

SIE

NOTES

RANGE OF USE

Flow rates up to:	**800 m³/h**
Manometric head up to:	**65 m**
Maximum operating pressure:	
	13 bar up to +140°C
	16 bar up to +120°C
Temperature range:	**–20° to +140°C**
Maximum ambient temperature:	**+40°C**
Nominal diameter of holes:	**40 to 200**
MEI* of reference:	**≥ 0,10**

*Minimum Efficiency Index

DIE

ELECTRONICALLY ADJUSTABLE IN-LINE PUMPS

Heating - Air conditioning

50 Hz

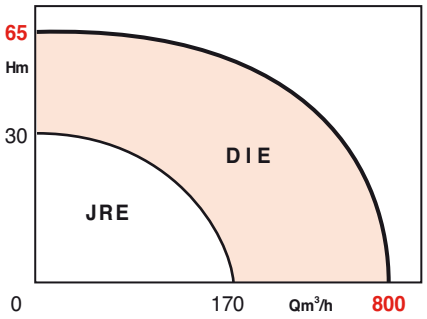

APPLICATIONS

Pumps designed to circulate hot or cold water without abrasive residues in heating, cold water and iced water installations, and in irrigation installations.
If additives such as glycol or oil are used check that the gaskets are appropriate and whether the flow rate needs correcting (for added glycol from 20% vol).

• Pumped liquids permitted:
- Heating water subject to VDI 2035
- Cooling water and cold water
- Water/glycol mixtures [1]
- Heat transfer oil [2]
- Other liquids on demand [3]

Characteristics

Speed: 2 pole: 750-2900 rpm
4 pole: 380 - 1450 rpm.
Power continuously adjusted.

1) For 20 - 40 % vol. of glycol and temperature of the liquid ≤ 40° C.
2) Special model at additional cost.
3) Special model at additional cost.

ADVANTAGES

• ENERGY-SAVING
- Optimum point of operation of pumps.
- Saves up to 50% of energy compared with traditional pumps.

• NOISE CONTROL
- Eliminates hiss and noise from the thermostatic taps. Speed automatically adapted for added comfort

• RELIABILITY
- The entirely automatic operation needs no maintenance or purging of the sensor.
- Electronic module fitted with a non-volatile memory for storing data, so settings are protected in the event of a power failure.
- IClass IP 55 protection for the motor/module assembly in damp and dusty environments.

• SIMPLICITY
- One button to choose functions and adjust settings.
- Parameters always visible on LCD screen.

EVS

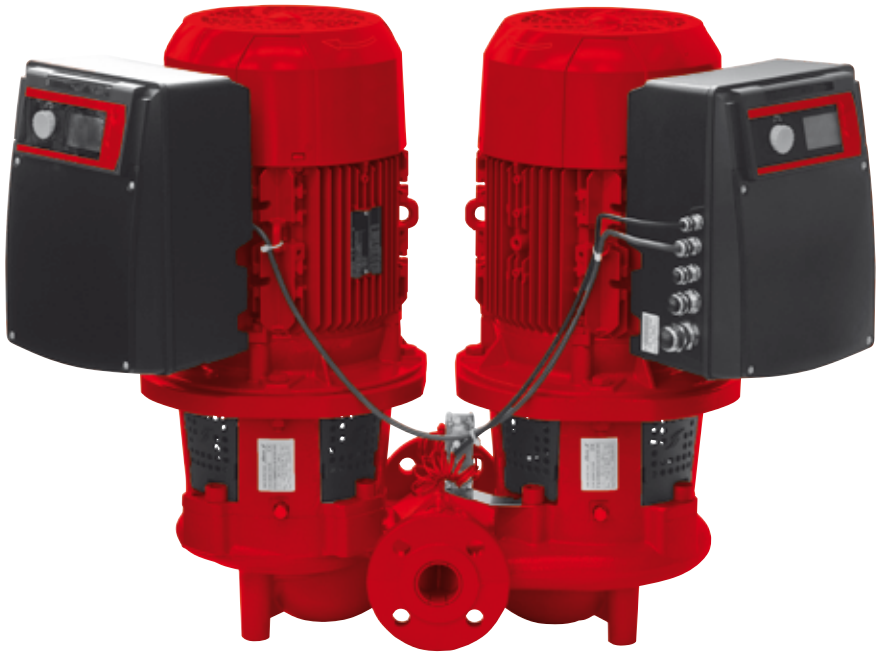

DIE

CONSTRUCTION

• Hydraulic part

- Low-pressure single-stage centrifugal pump, inline construction, with intake and output flanges of the same nominal diameter, with standard IEC air-cooled motor.
- PN 16 drilled flanges according to EN 1092-2.
- G 1/8 manometer connections used for the built-in differential pressure sensor.
- The housing of the pump is fitted with bosses as standard and designed for a maximum operating pressure of 16 bar.
- The coupling of the motor shaft is rigid.
- The housing and the closed impeller are in grey cast iron.
- The mechanical waterproof seal, without maintenance and independent of the direction of rotation, is suited for clean water up to 140°C and water/glycol mixes up to 40% vol. and a maximum temperature of 40°C 1 [1].
- Special materials and waterproof seals available for other uses.

• Motor

Motor of class IE2

Built-in thermal protection by CTP temperature sensor in all the coils of the motor (thermistor).

- Three-phase motor with short-circuit rotor

Speed: 2 poles: 750-2900 rpm
4 poles: 380-1450 rpm.

Voltage: 3~400 V, 50 Hz
3~380 V, 60 Hz

Protection class: IP 55

Insulation class: 155 (F)

CEM Compliance: EN 61800-3

Protection differential (FI)

Selective differential circuit-breakers FI of the "all currents" model are permitted (leakage current > 300 mA).

Sigle FI 

BASIC CONSTRUCTION

Main parts	Material
Pump Housing	EN-GJL 250 [2]
Impeller	EN-GJL 200 [3]
	G-CuSn 10 [4]
Lantern	EN-GJL 250
Shaft	1,4122/X39CrMo17-1
Mechanical waterproof seal	Graphite/Carbide Si/EP

* Other waterproof mechanical seals [5] on demand.

IDENTIFICATION

DIE 205 - 17/7,5 - 2G - R1

- DIE: pump code
- Motor 2: 2 poles, 4: 4 poles
- Nominal Ø of holes in cm
- Nominal Ø of the impeller in cm
- Power of motor in kW
- 2nd generation
- Without pressure sensor

EQUIPMENT

- **Δ P-c adjustment mode** for constant differential pressure on the pump.
- **Δ P-v adjustment mode** for variable differential pressure on the pump.
- **Speed adjusted by signal (0-10V, 2-10V, 0-20mA, 4-20mA)** for connection to an external GTC unit.
- Manual speed control.
- **PID control**: constant control of magnitude with adjustment of the PID feedback loop.
- Graphic display.
- Fault Indicator light.
- Reset button in case of faults.
- Centralised operation signal switched off (make contact).
- Centralised error signal (break contact).
- External ON/OFF.
- "Analogue 0… 10V **" input.

ASSEMBLING

Mount directly onto horizontal pipework (or vertical up to 15 kW max) or onto pad. Assembly with motor or module downwards is not permitted. Allow room for dismantling the motor, the lantern and the impeller.

Possible assemblies

- On pipework
- On console [6]

Connections of manometer pipes

Flanges according to PN 16/EN 1092-2

PARTICULARITIES

• Packaging

The pump, the packaging, and the assembly and operation manual are delivered together.

• Accessories

- Consoles for mounting on baseplate
- Module IF (ModBUS, LON, BACnet S/TP, CAN, interface numérique PLR) [7]
- Salmson Pump Control Kit for remote control of Salmson electronic pumps using infrared.

1) For 20 - 40 % vol. of glycol and a temperature of the liquid ≤ 40°.
2) Formerly Ft 25, treated against corrosion
3) Formerly Ft 20.
4) Special model at additional cost.
5) For example for water/glycol mixes different from 1).
6) Special model at additional cost.
7) See table of functions

CROSS-SECTION DIAGRAM

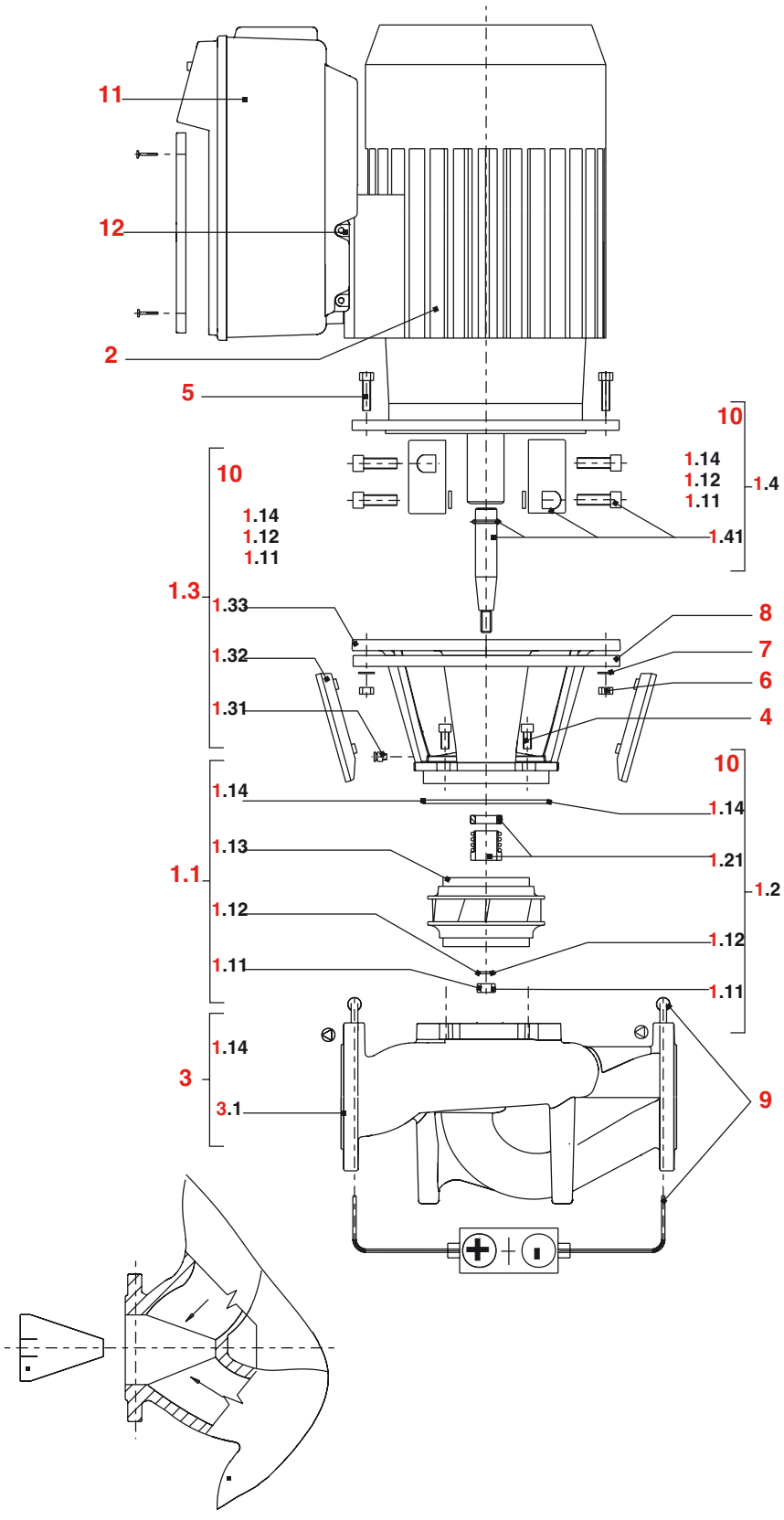

1.1 Set of spare parts with
- 1.11 Nut
- 1.12 Washer
- 1.13 Impeller
- 1.14 O-ring

1.2 Set of spare mechanical seal parts with
- 1.21 Complete mechanical seal

1.3 Set of spare lantern parts with
- 1.31 Air cock
- 1.32 Coupling protector
- 1.33 Lantern

1.4 Set of spare shaft parts with
1.41 Coupling + shaft
1.5 Complete coupling

2. Motor
3. Complete pump housing with
3.1 Pump housing
4. Fixing screw for lantern/pump
5. Fixing screw for motor/lantern
6. Nut for motor/lantern fixing
7. Washer for motor/lantern fixing
8. Motor adaptor ring, nominal diameter 100.
9. Indicator of differential pressure
10. Tool
11. Module
12. Adapter.

DIE

MODULE IF

Additional plug-in IF module for electronically adjustable pumps in the DIE series (only one module is necessary), providing the following additional functions (only one module is needed):

- interface for communication BUS (ModBUS, LON, BACnet S/TP, CAN, PLR digital interface) for connection to a home computer system.



WIRING DIAGRAM

Three-phase current 3~400V, 50Hz/380V, 60 Hz

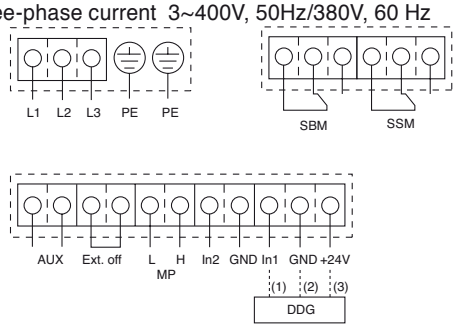

Permissible values of On and Fault dry contacts:
- min. 12 V DC/ 10 mA
- max. 250 V AC/1 A

L1,L2,L3,PE: connection to the 3~400V - 50 Hz – 3~380V - 60 Hz system
SSM: dry contact, fault signal
SBM: dry contact, On signal
AUX: external switch of pumps (only for double pumps). The pumps can be switched over via an external contact (24 V CC/10 mA)
Ext. Off: remote On/Off
MP: managing double pump (or 2 single)
(3): +24 V (output) for external sensor supply - Imax: 60 mA
(2): mass (^) of sensor
(1): 0 - 10 V (input) of the built-in sensor or external sensor (GTC)
4…20 mA: analogue 4-20 mA signal (input) for external control (GTC)

TABLE OF DIE FUNCTIONS

Operating modes	
Δp-c for constant differential pressure	•
Δp-v for variable differential pressure	•
Setting mode (n = constant)	•
Manual control	
Single button and screen	•
Manual functions	
Adjusting the differential pressure setting	•
Adjusting the speed of rotation (setting mode)	•
Adjusting the operating mode	•
Turning the pump on/off	•
Configuration of all the operating parameters	•
Clearing faults	•
Functions of external commands	
Command input “Priority Off”	•
Command input “External switch of pumps” (only active in double pump mode)	•
Command input “Analogue In 0 ... 20 mA” (remote alteration of speed)	•
Command input “Analogue In 0 ... 10 V” (remote alteration of speed)	•
Analogue input 0-10 V for the actual value of the pressure sensor signal	•
Analogue input 2-10 V, 0-20 mA, 4-20 mA for the actual value of the pressure sensor signal	•
Signalling and display	
Centralised fault message (dry report contact)	•
Centralised On message with the Salmson Pump Control kit (a USB stick to plug into a laptop)	•
Data exchange	
Infrared interface for the wireless exchange of data with Salmson Pump control	•
Place for IF modules (Modbus, BACnet, CAN, PLR, LON) for connexion to the centralised technical management	•
Safety functions	
Total motor protection with built-in electronic trip	•
Lockable access	•
Double pump control (double pump or 2 single pumps)	
Principal/backup operating mode (automatic switchover in the event of fault)	•
Principal/backup operating mode - pumps switch over every 24 hours	•
Running in parallel	•
Running in parallel (with optimised efficiency in accordance with need)	•

• = supplied, = not supplied.

GENERAL PRESET CHART - 2 AND 4 POLE - 50HZ

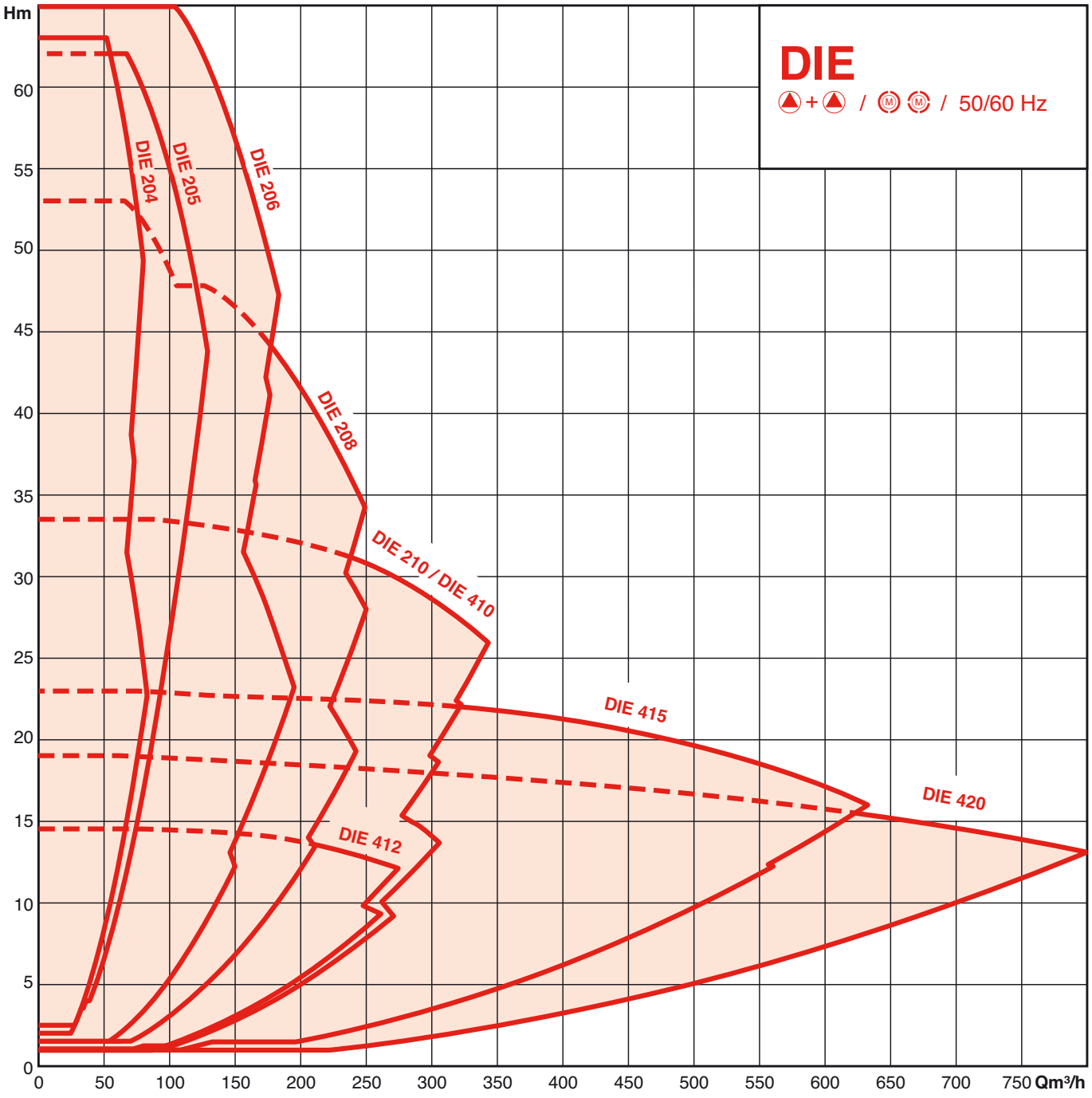

DIE

HYDRAULIC PERFORMANCESS - OPERATION IN NORMAL / RESCUE MODE

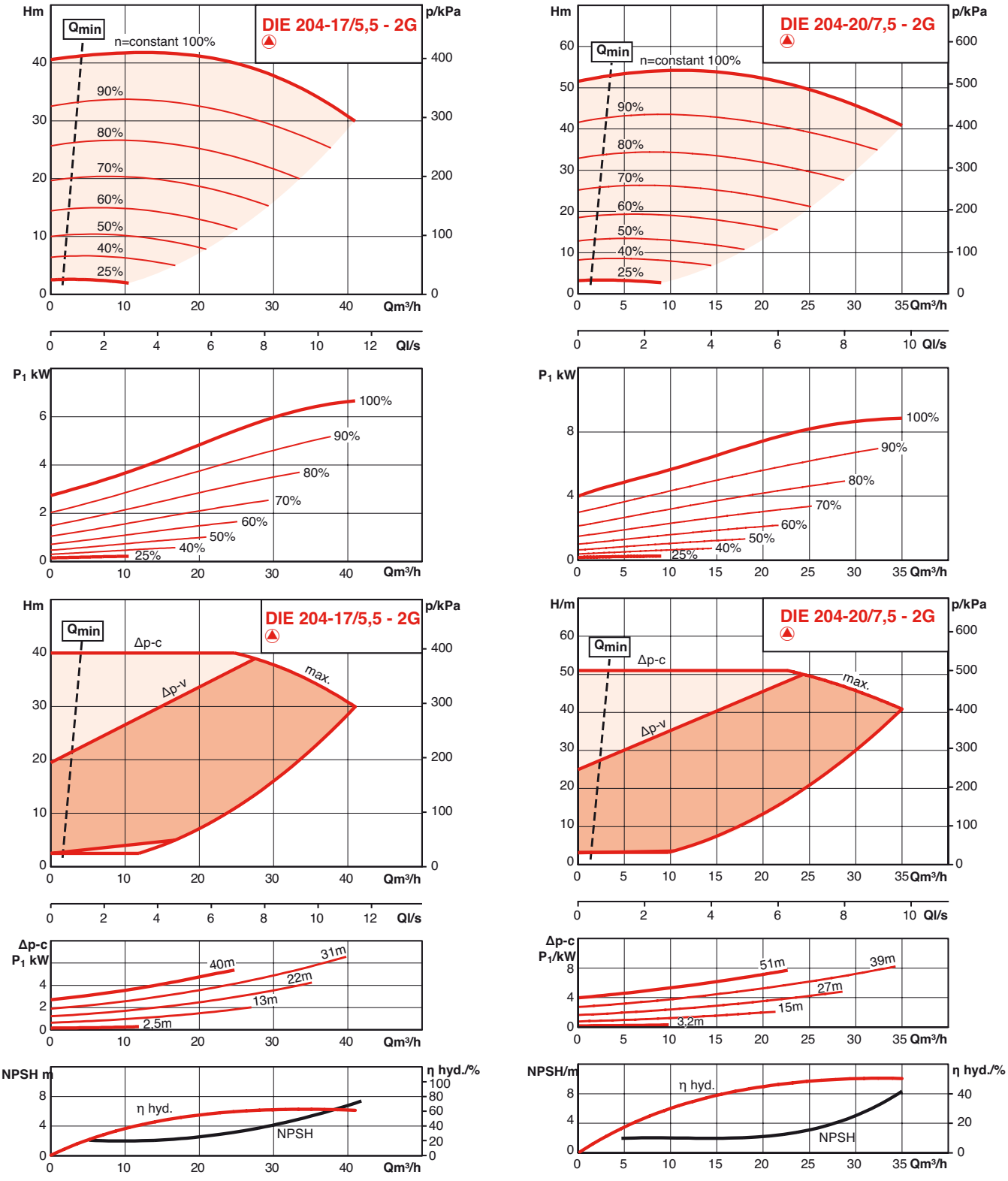

HYDRAULIC PERFORMANCESS - OPERATION IN NORMAL / RESCUE MODE

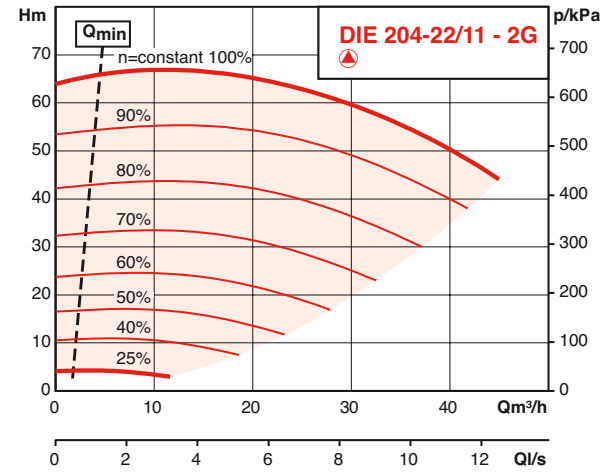

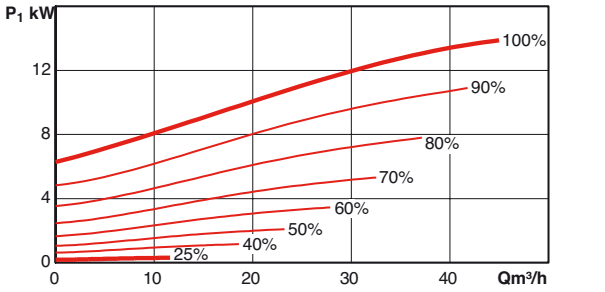

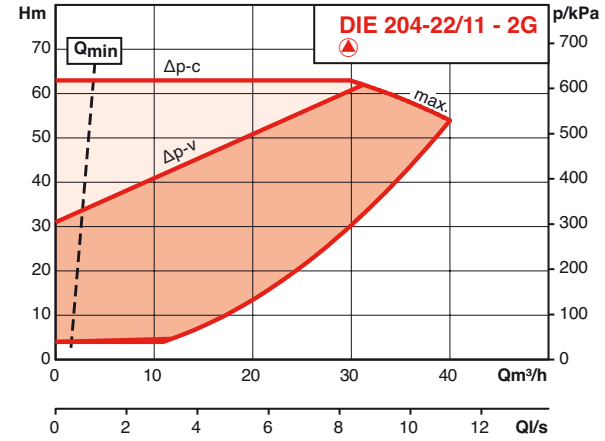

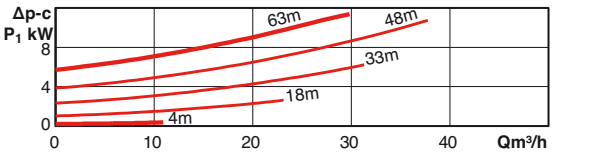

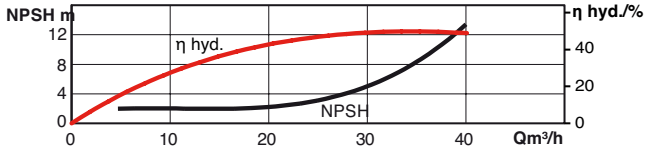

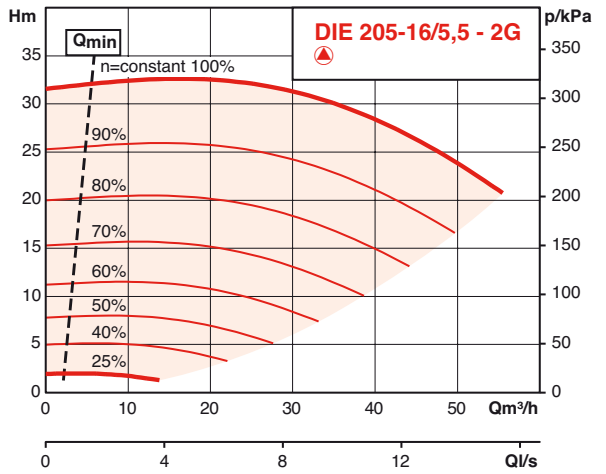

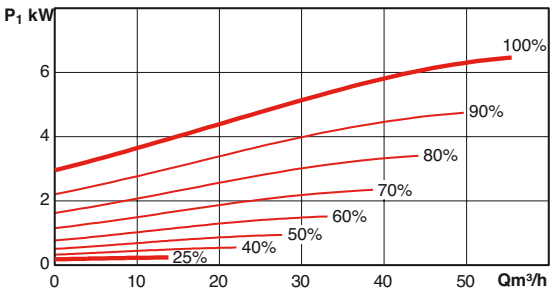

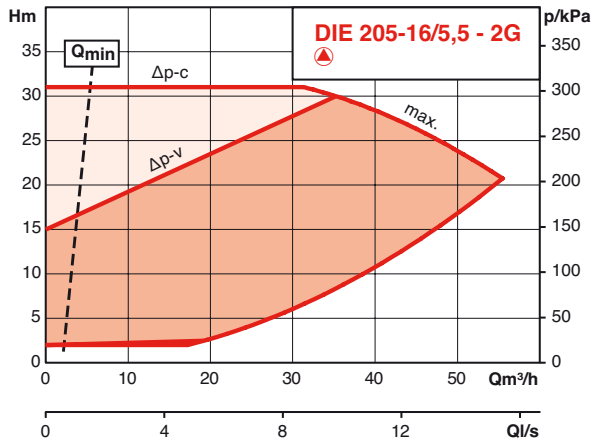

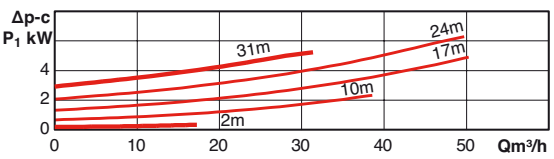

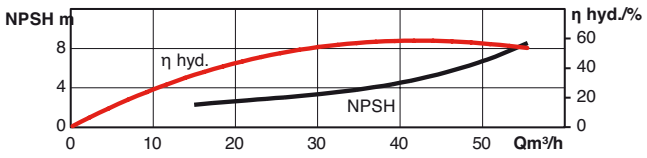

DIE

HYDRAULIC PERFORMANCESS - OPERATION IN NORMAL / RESCUE MODE

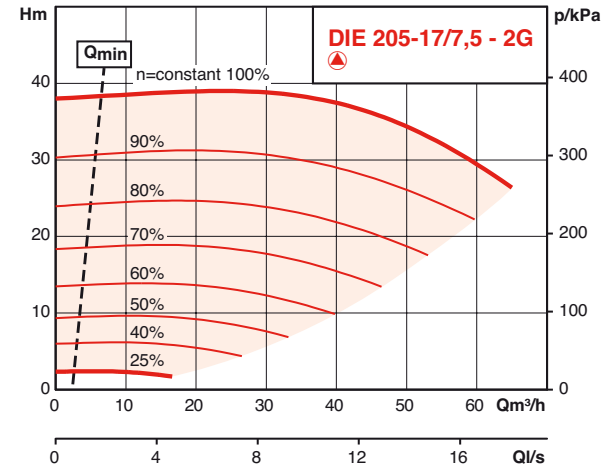

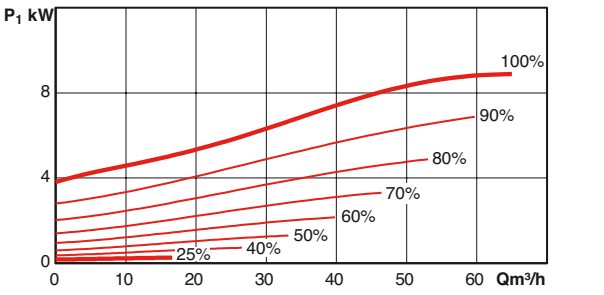

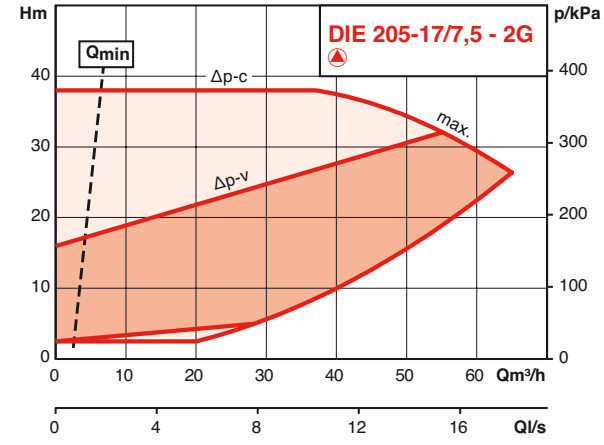

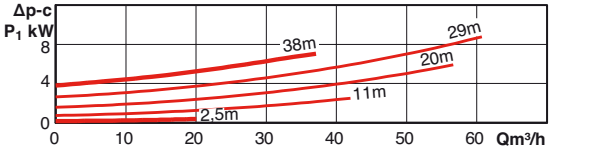

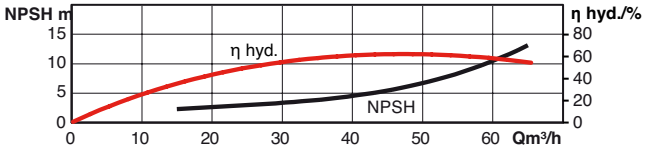

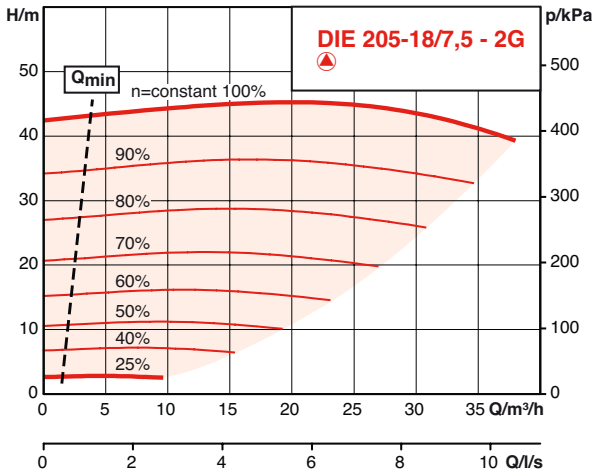

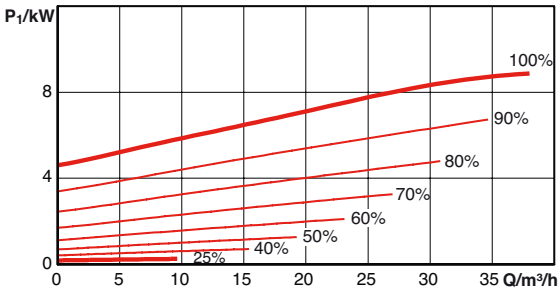

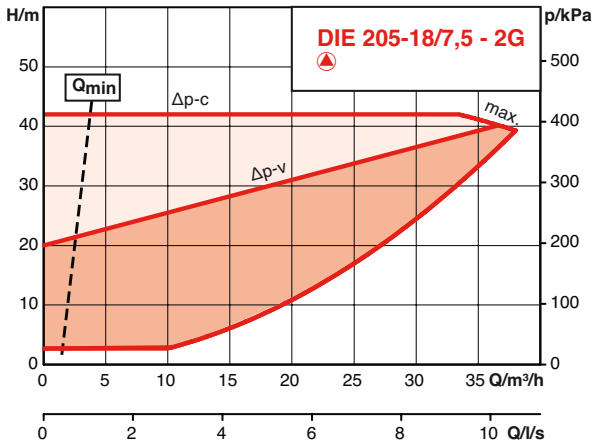

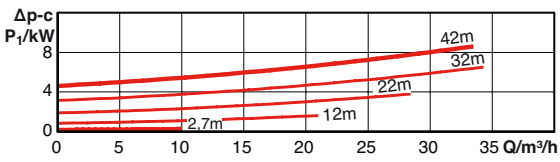

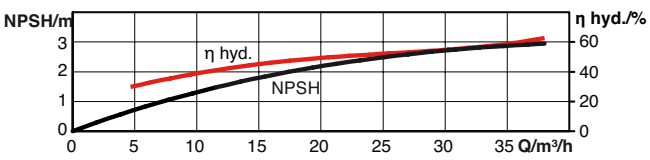

HYDRAULIC PERFORMANCESS - OPERATION IN NORMAL / RESCUE MODE

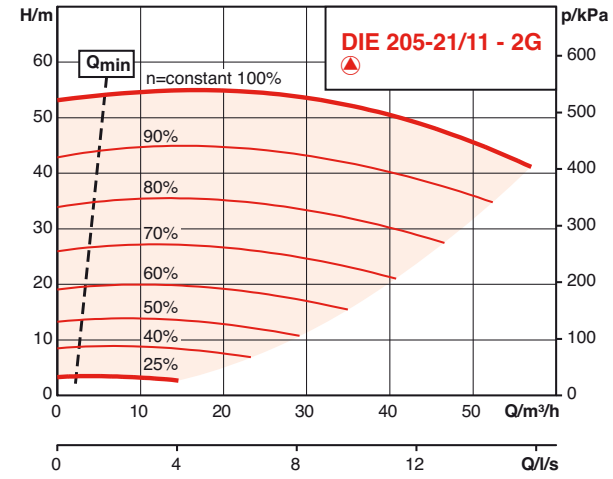

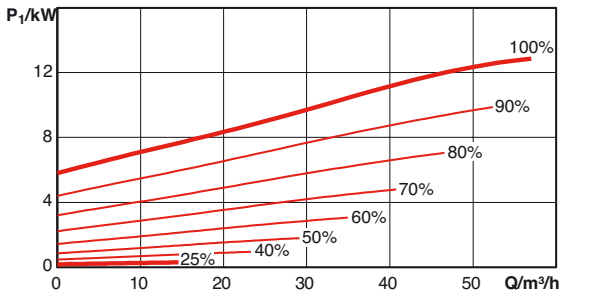

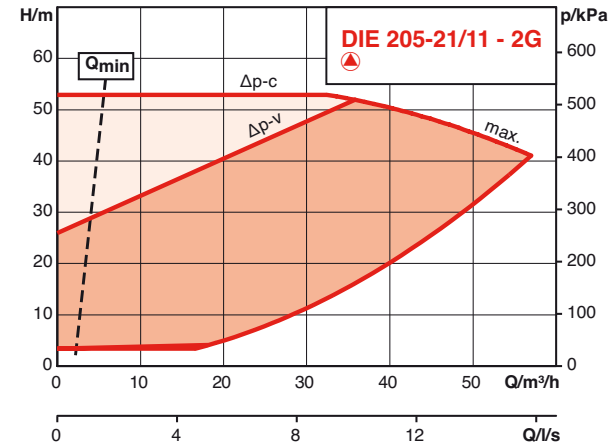

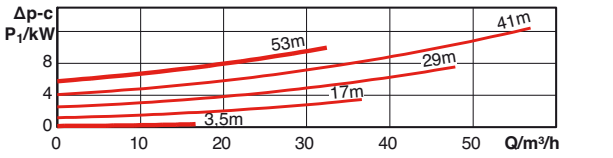

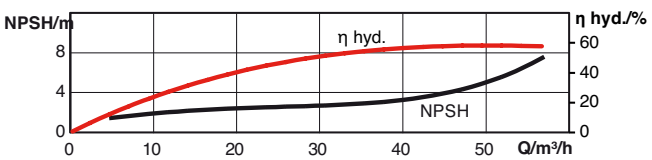

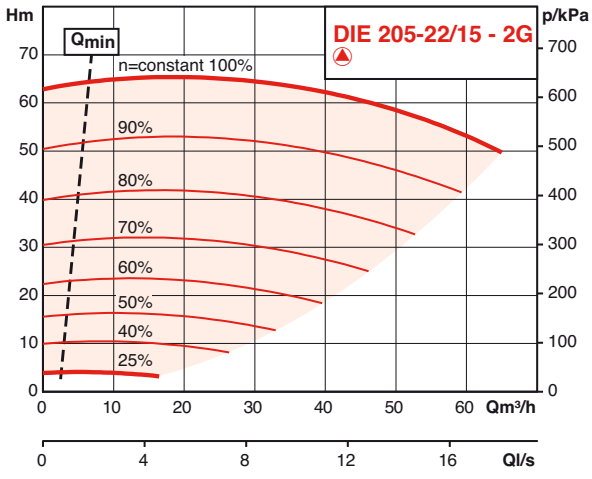

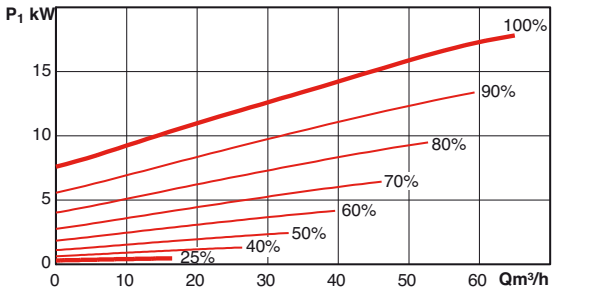

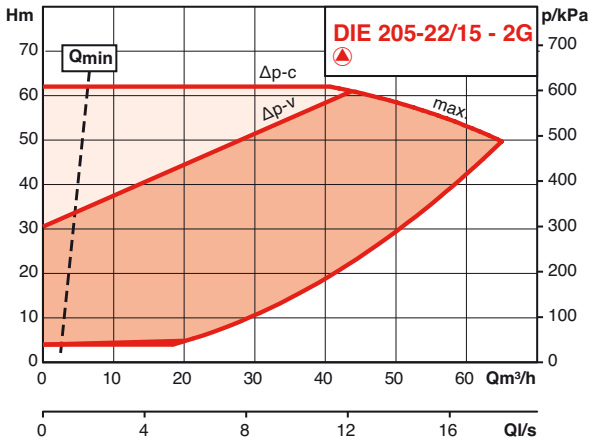

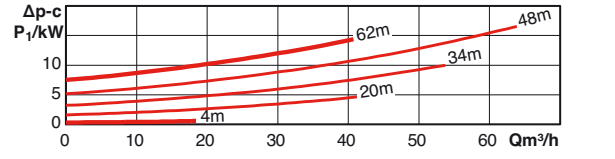

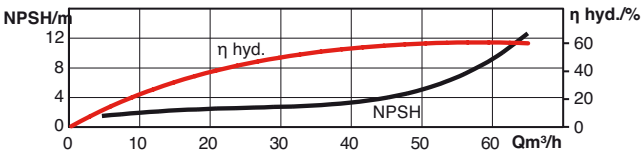

DIE

HYDRAULIC PERFORMANCESS - OPERATION IN NORMAL / RESCUE MODE

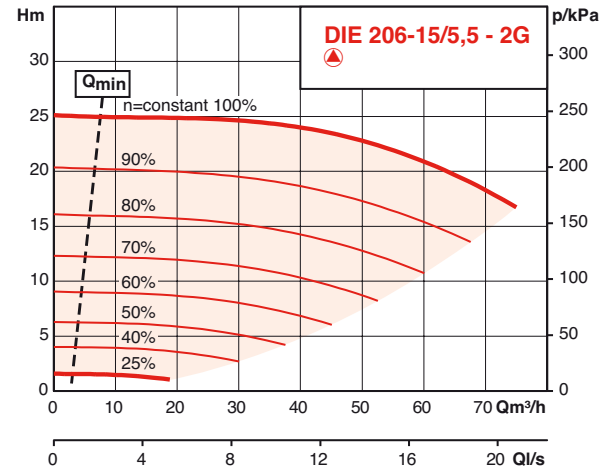

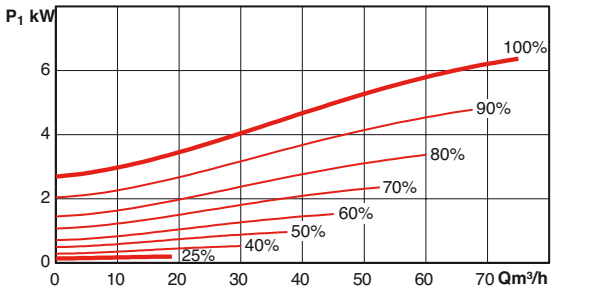

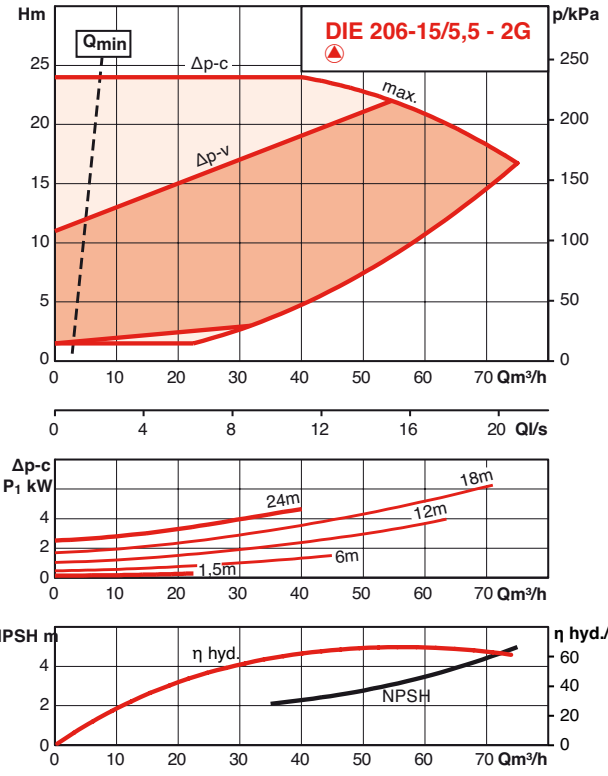

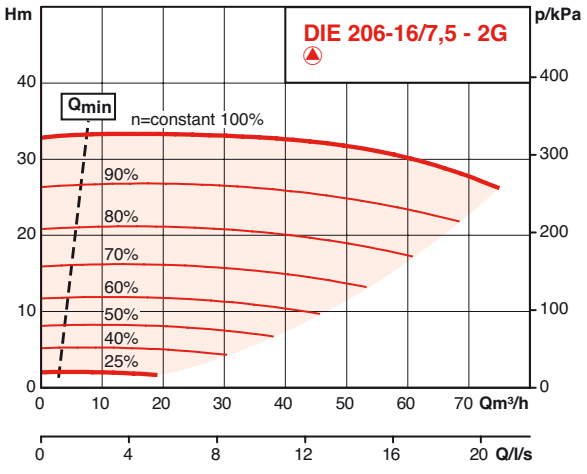

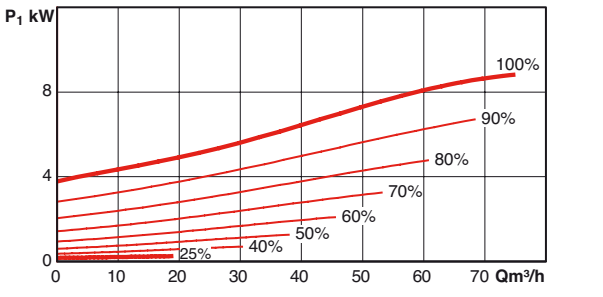

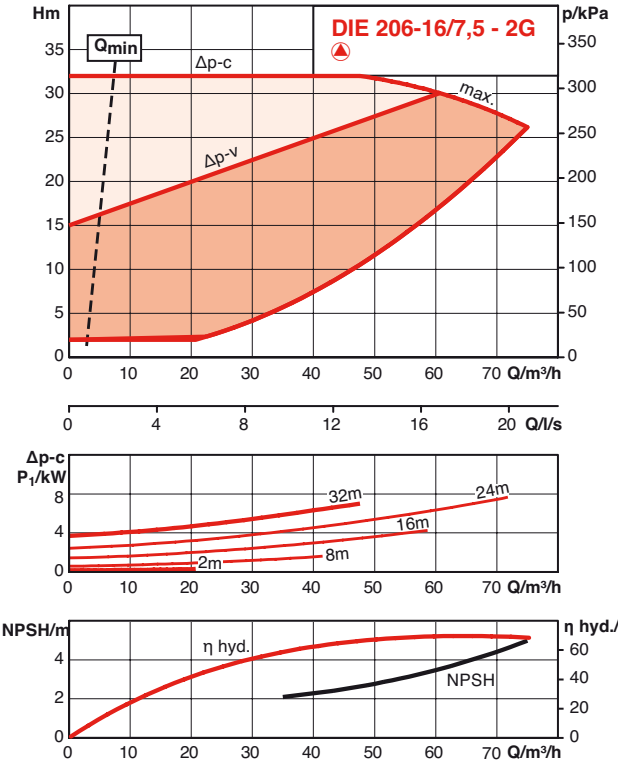

HYDRAULIC PERFORMANCESS - OPERATION IN NORMAL / RESCUE MODE

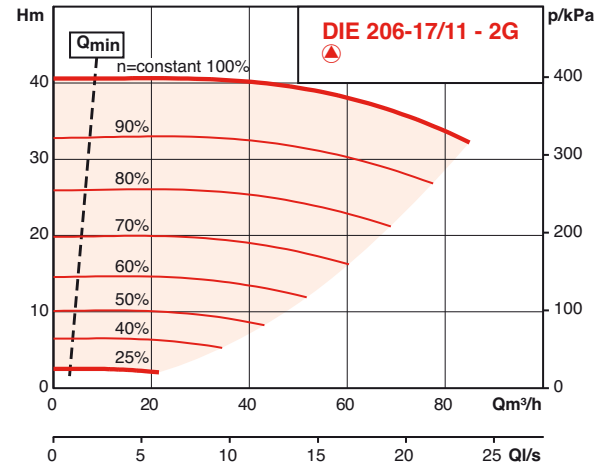

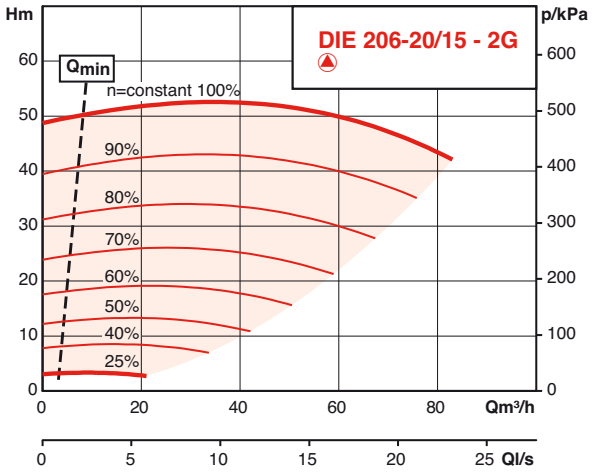

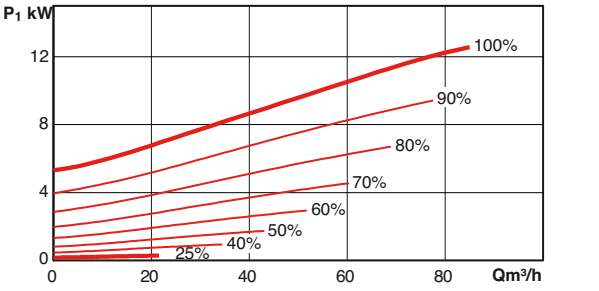

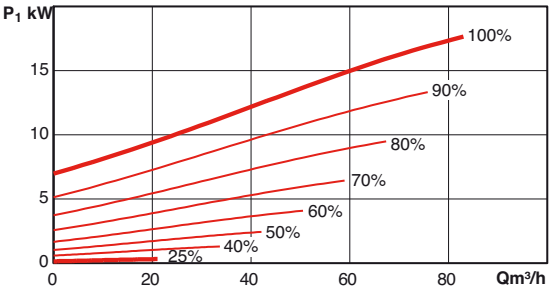

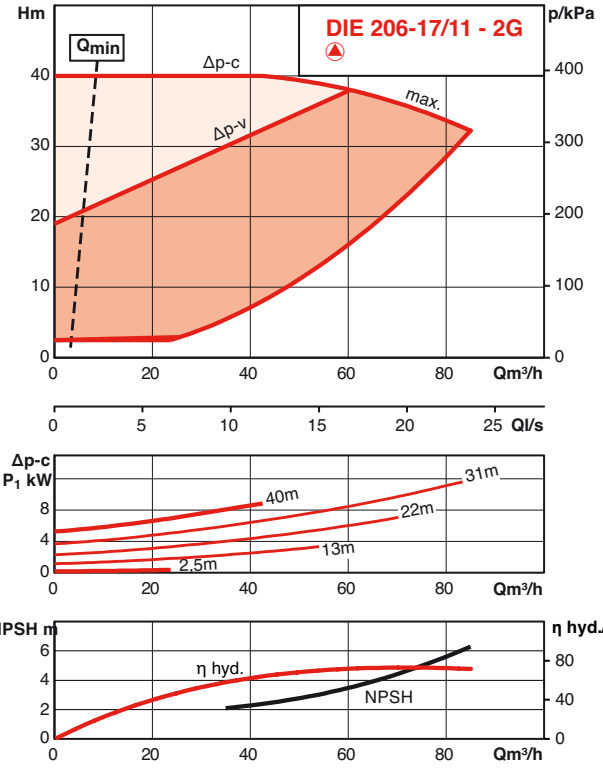

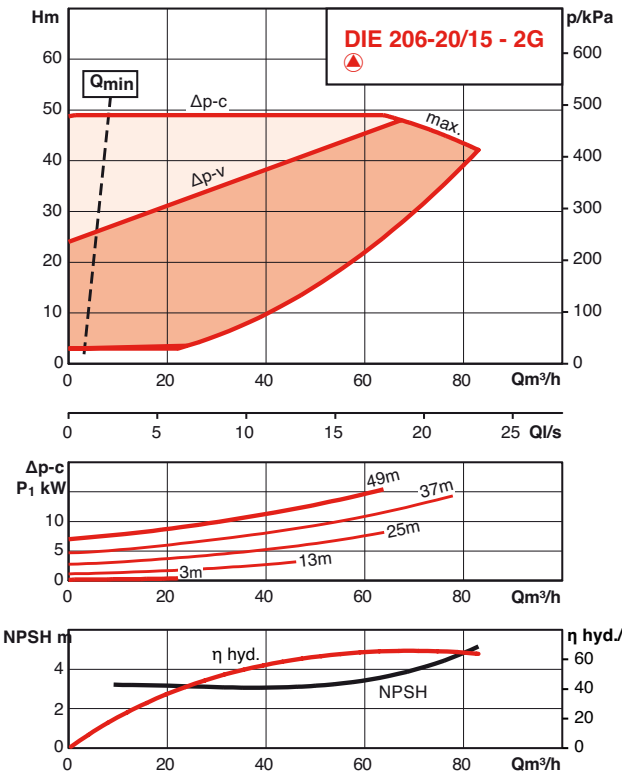

DIE

HYDRAULIC PERFORMANCESS - OPERATION IN NORMAL / RESCUE MODE

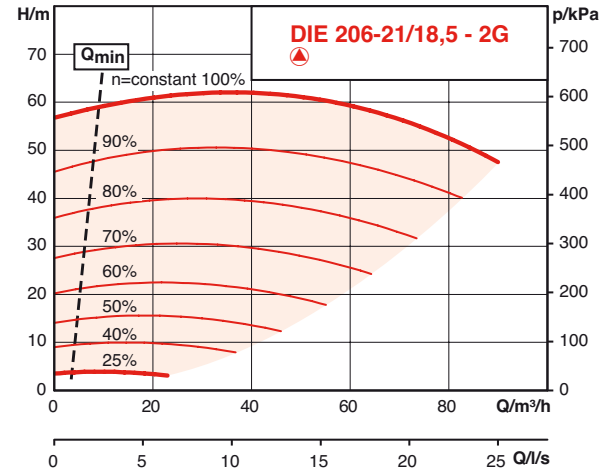

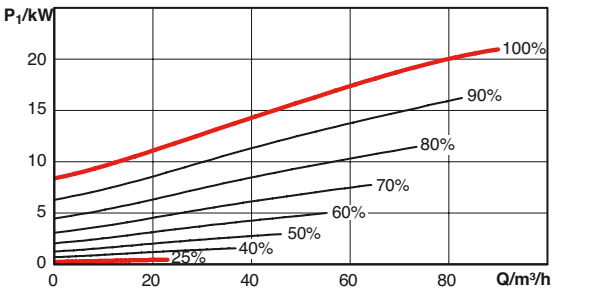

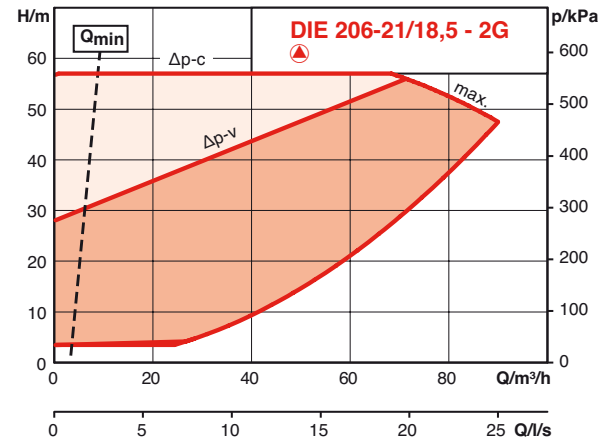

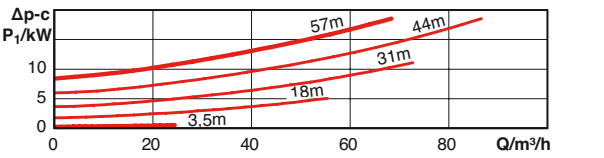

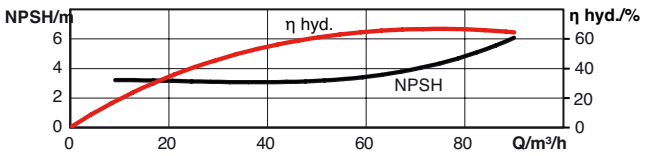

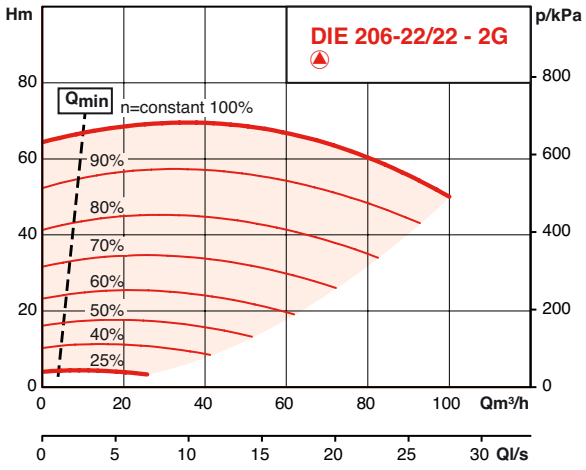

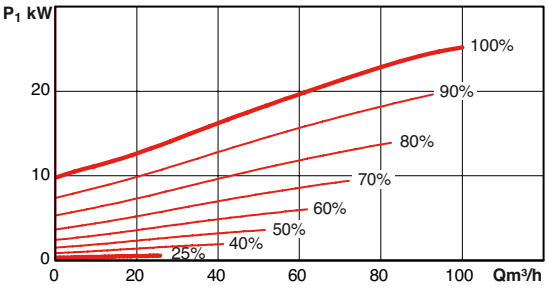

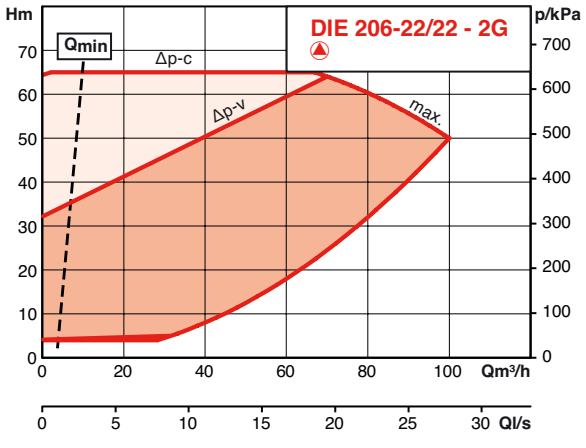

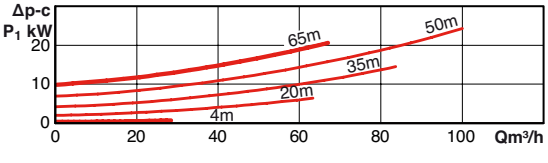

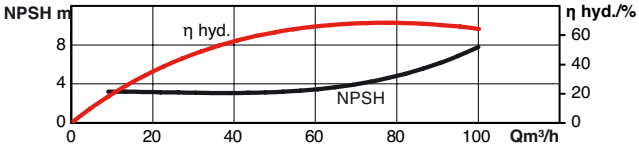

HYDRAULIC PERFORMANCESS - OPERATION IN NORMAL / RESCUE MODE

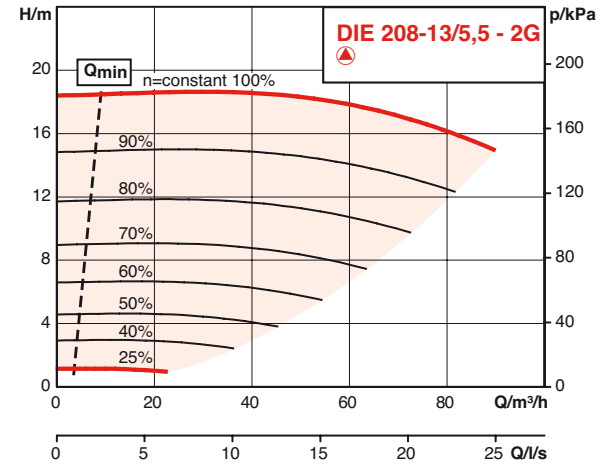

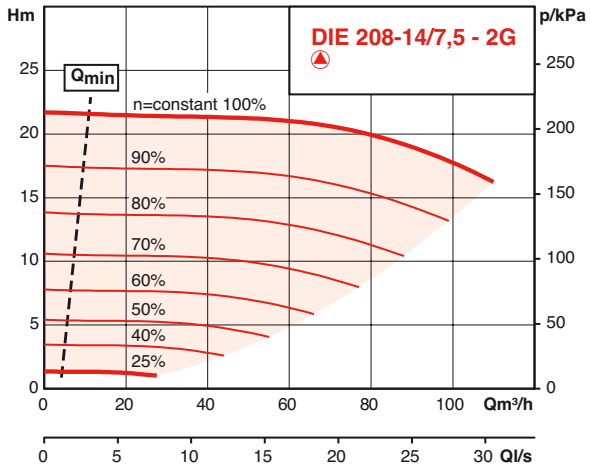

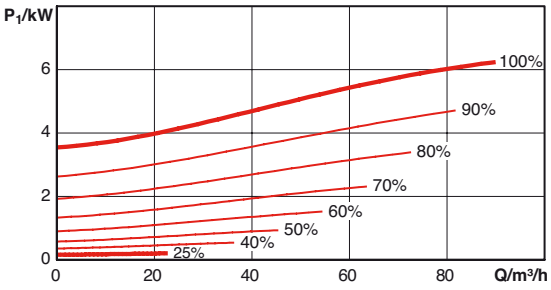

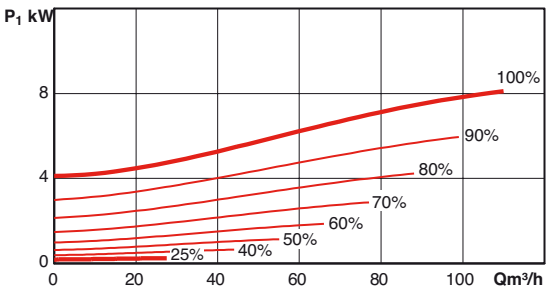

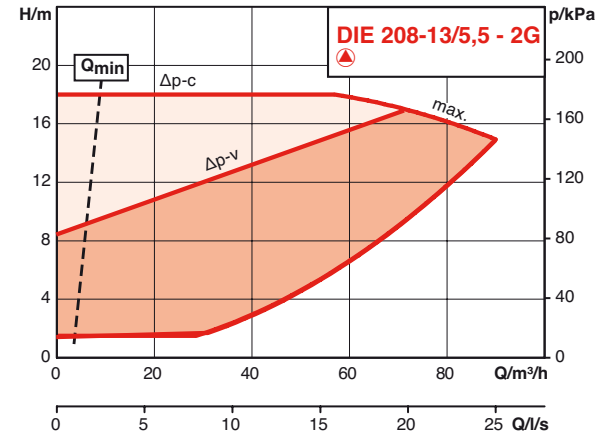

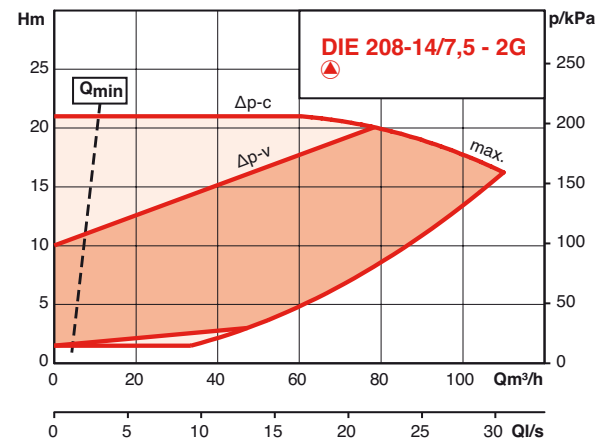

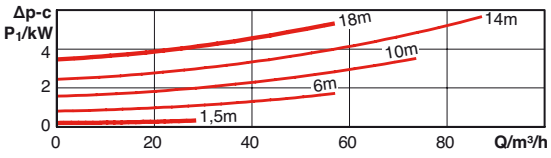

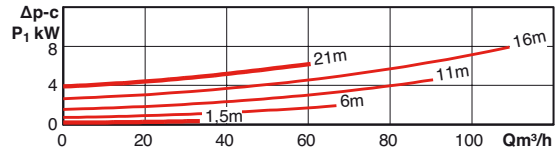

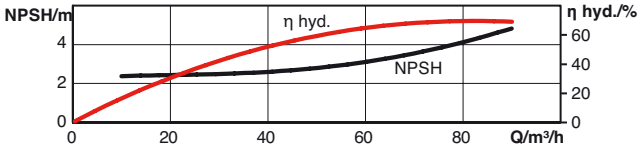

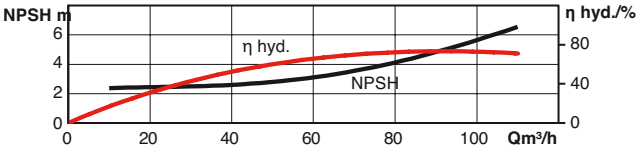

DIE

HYDRAULIC PERFORMANCESS - OPERATION IN NORMAL / RESCUE MODE

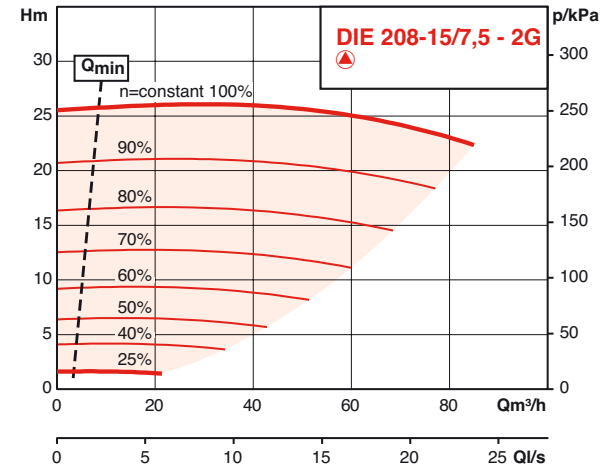

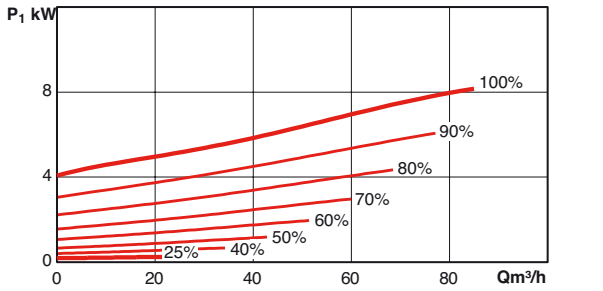

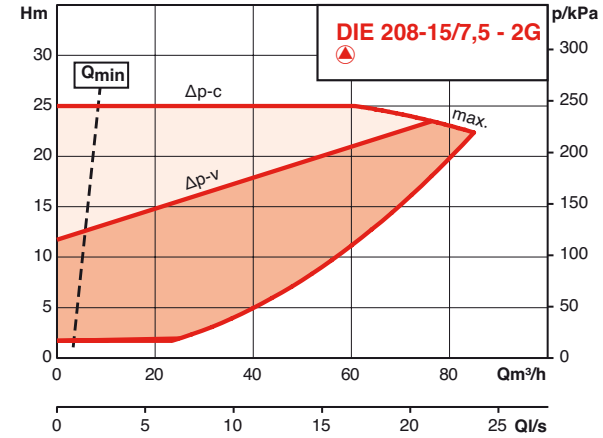

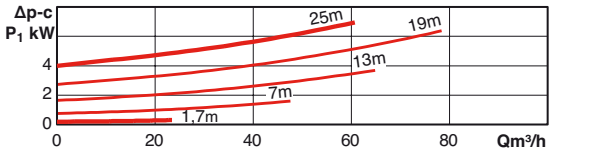

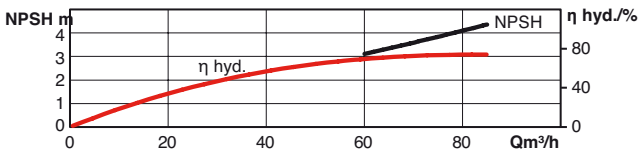

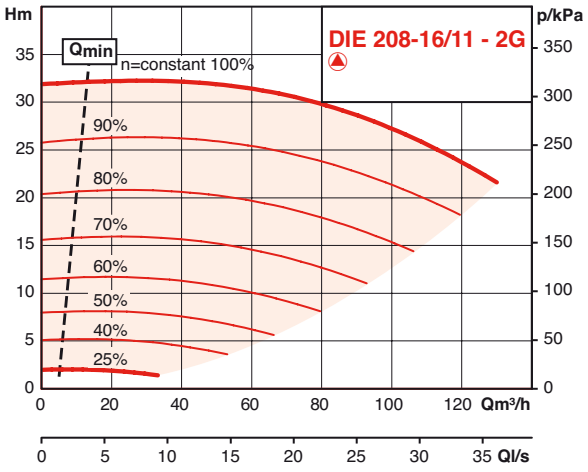

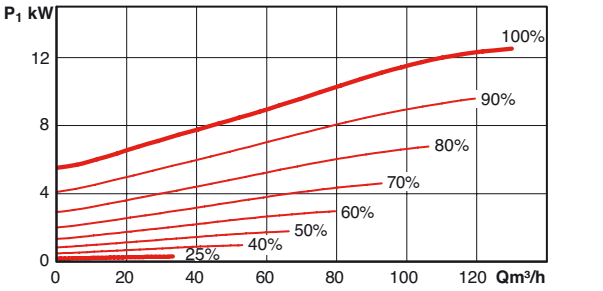

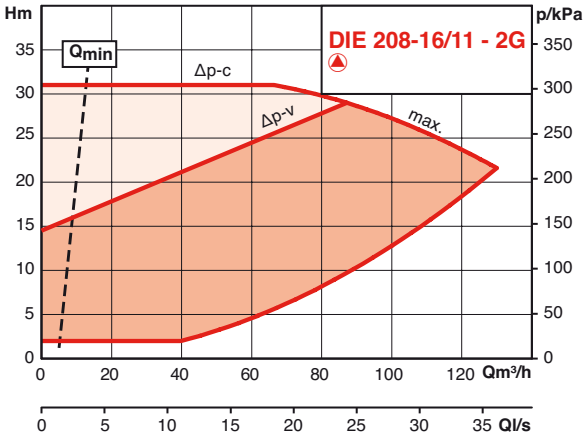

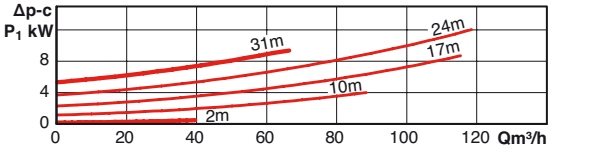

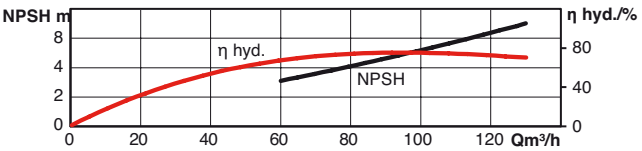

HYDRAULIC PERFORMANCESS - OPERATION IN NORMAL / RESCUE MODE

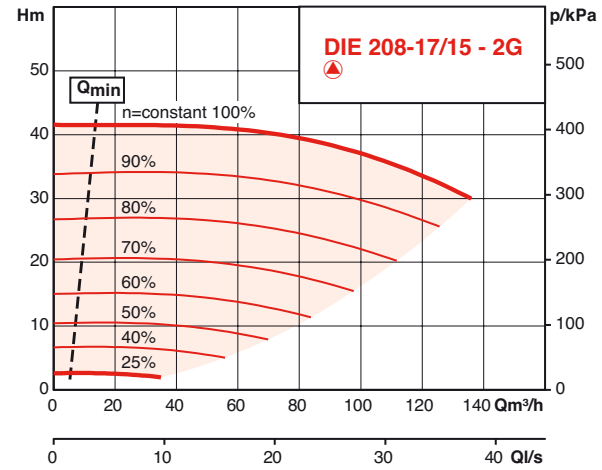

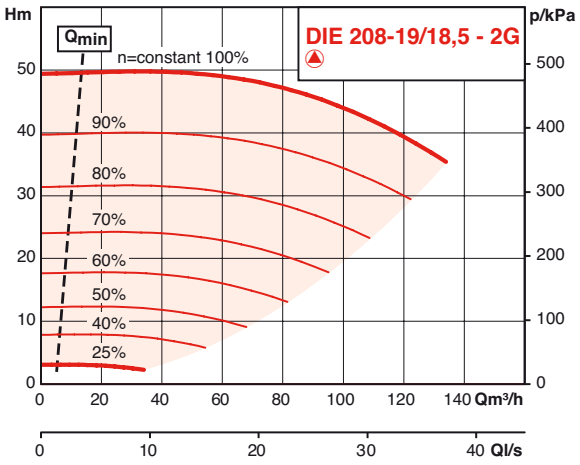

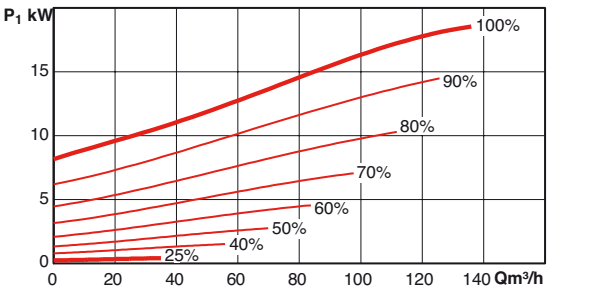

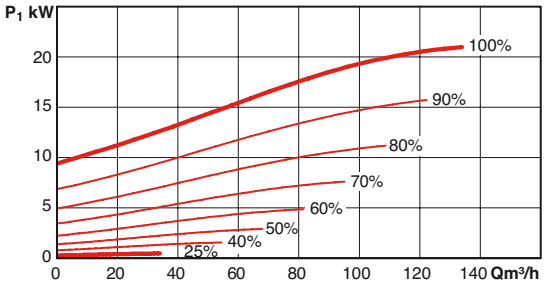

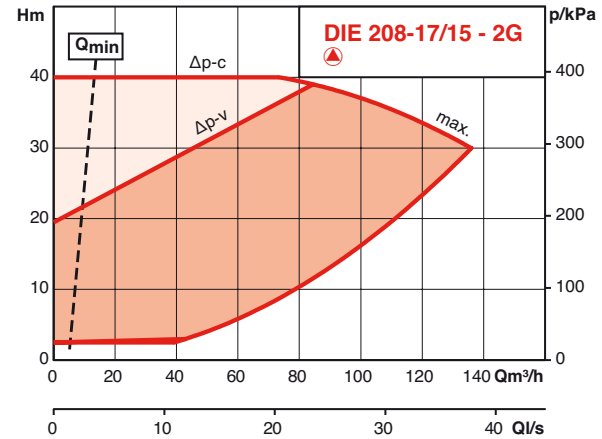

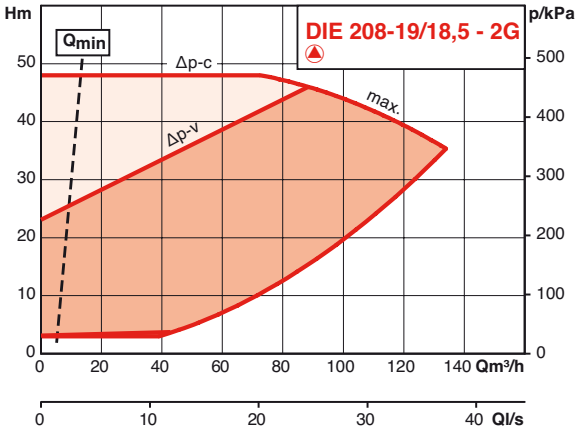

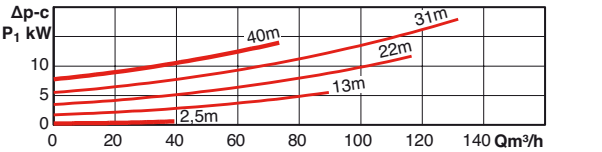

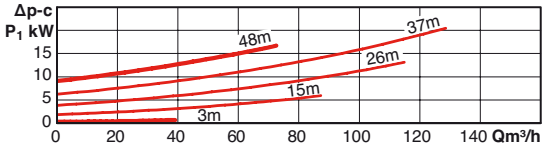

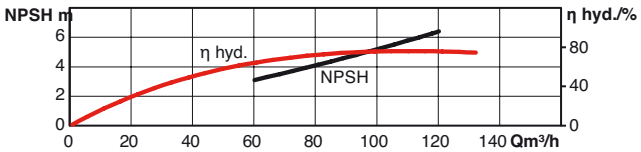

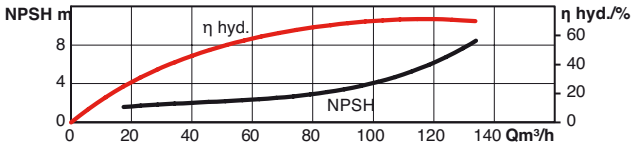

DIE

HYDRAULIC PERFORMANCESS - OPERATION IN NORMAL / RESCUE MODE

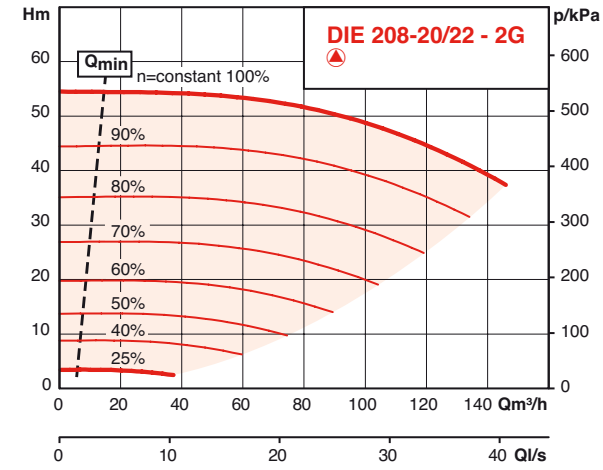

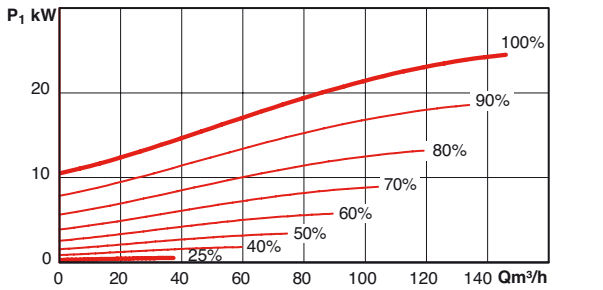

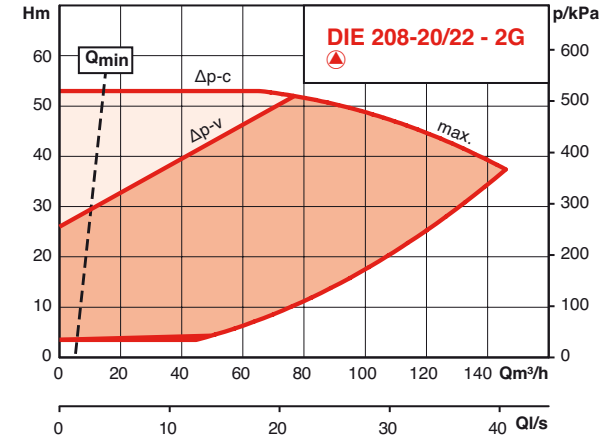

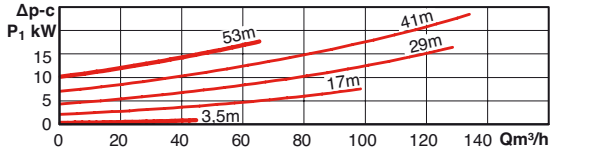

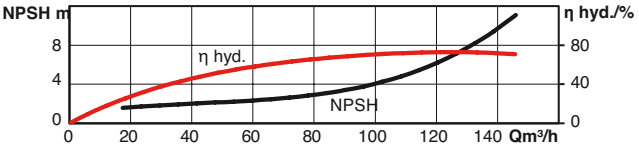

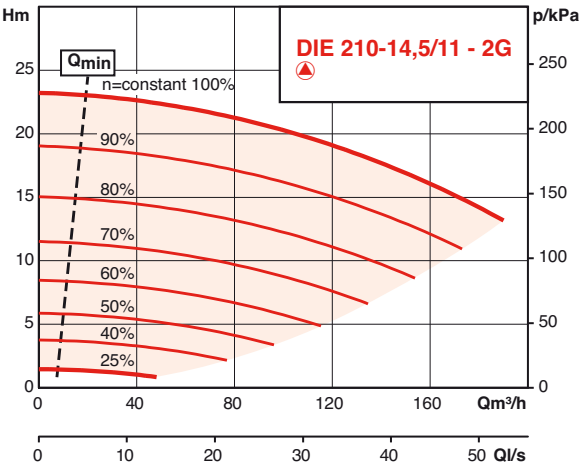

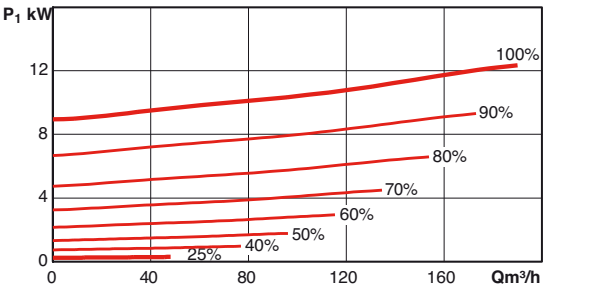

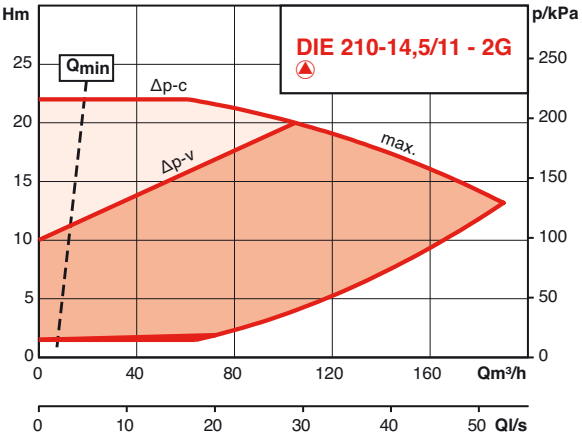

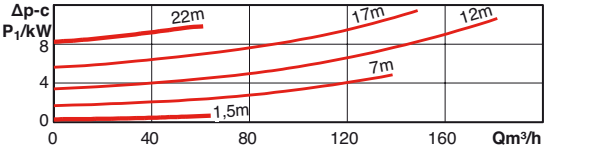

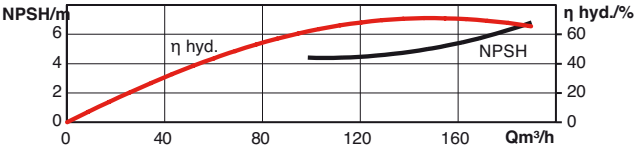

HYDRAULIC PERFORMANCESS - OPERATION IN NORMAL / RESCUE MODE

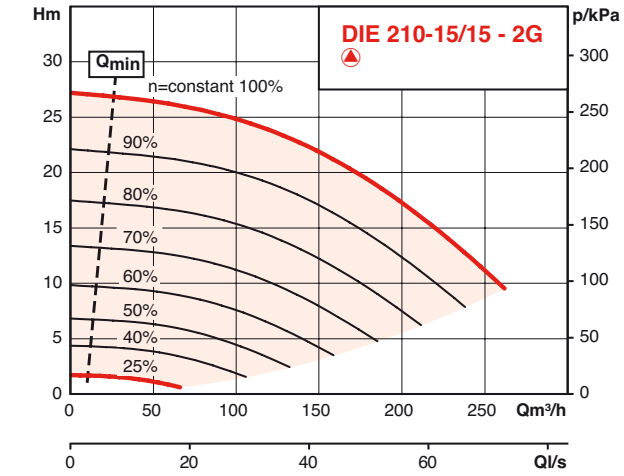

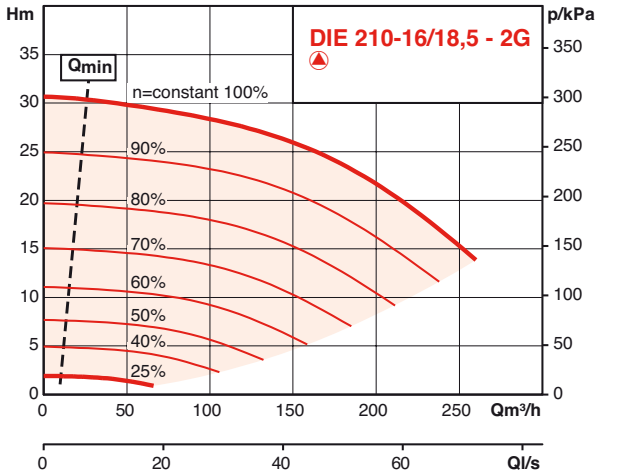

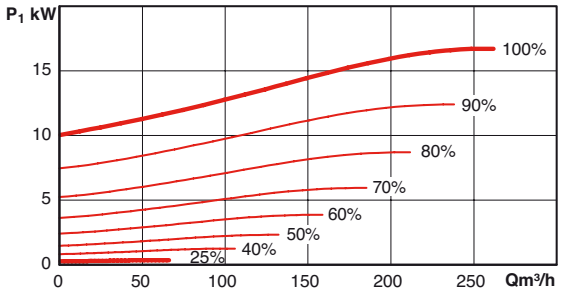

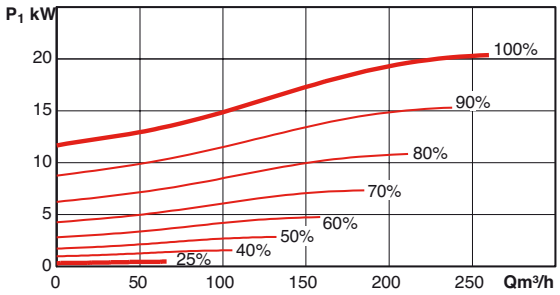

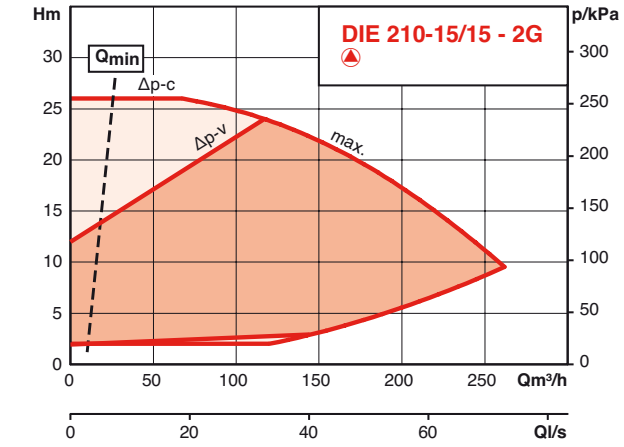

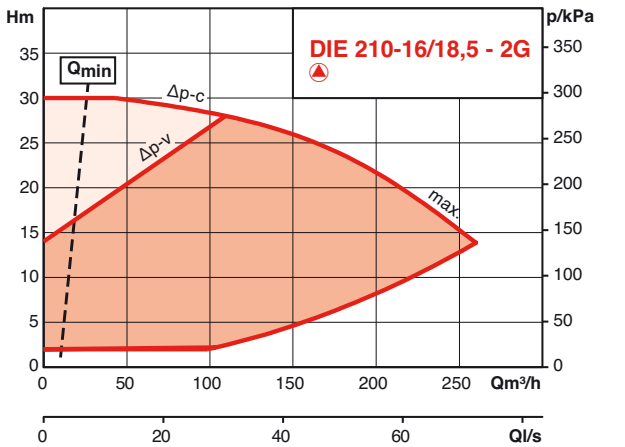

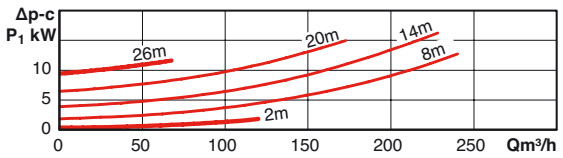

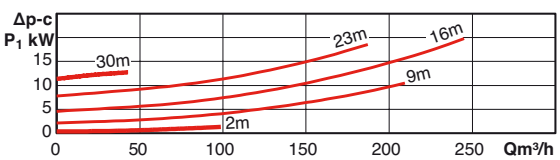

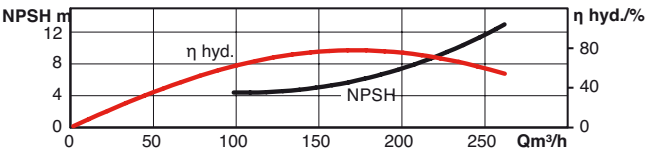

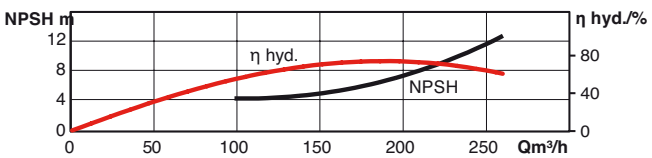

DIE

HYDRAULIC PERFORMANCESS - OPERATION IN NORMAL / RESCUE MODE

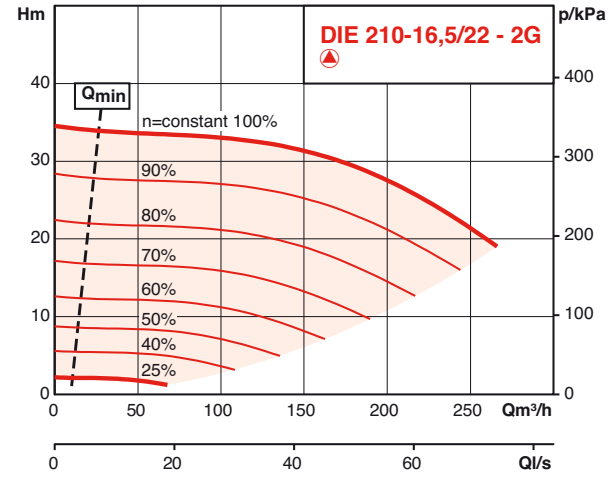

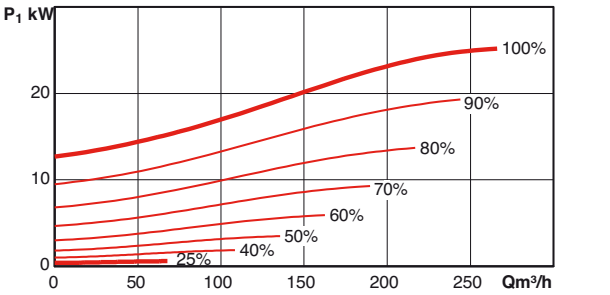

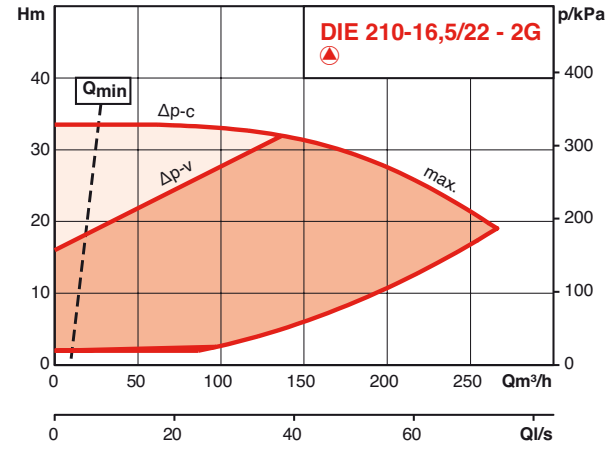

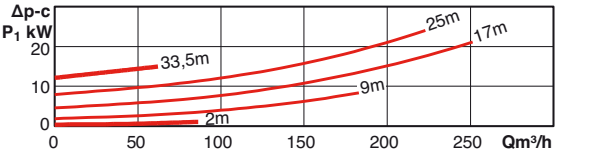

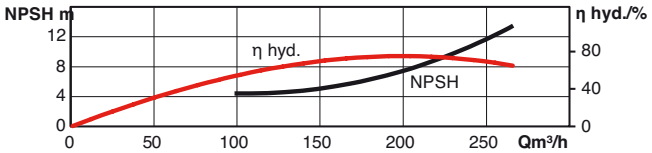

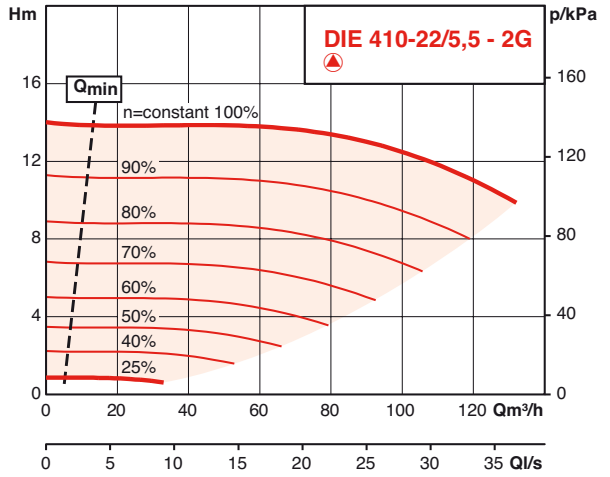

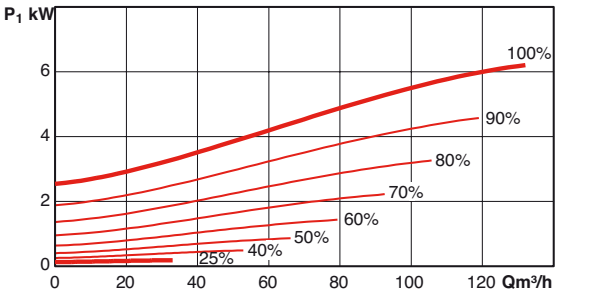

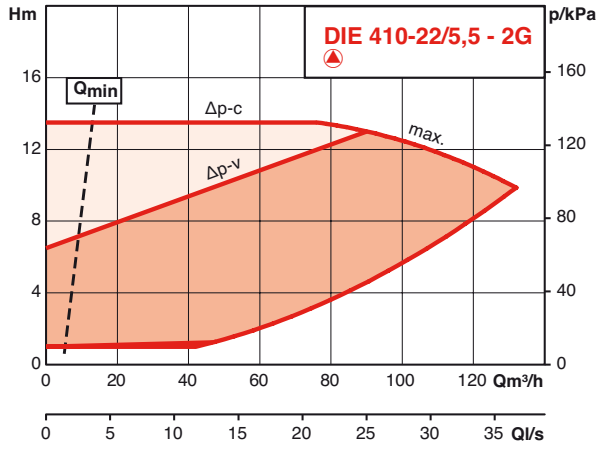

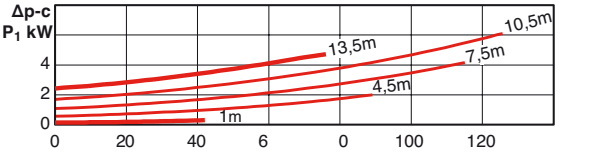

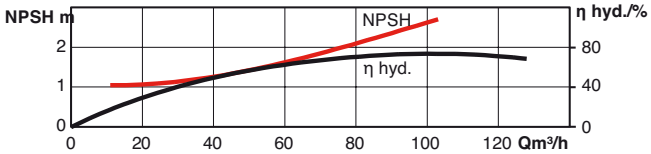

HYDRAULIC PERFORMANCESS - OPERATION IN NORMAL / RESCUE MODE

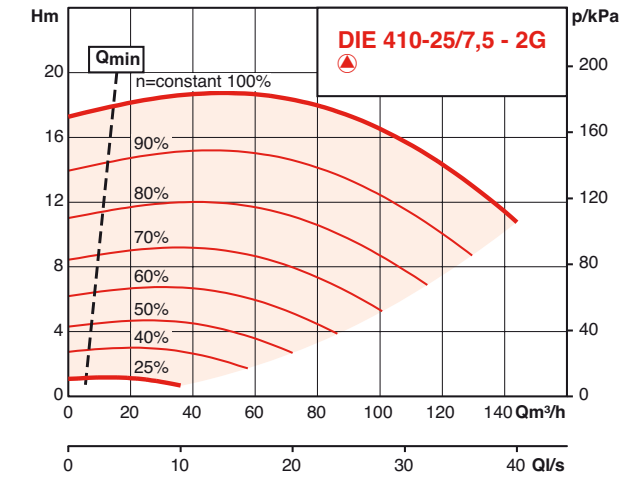

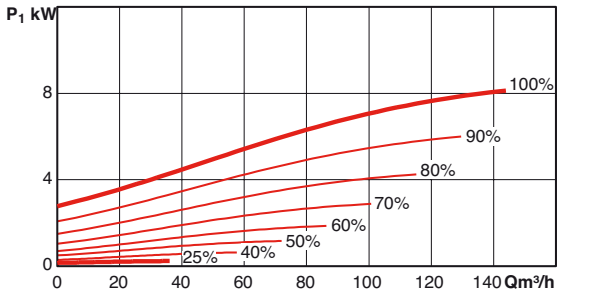

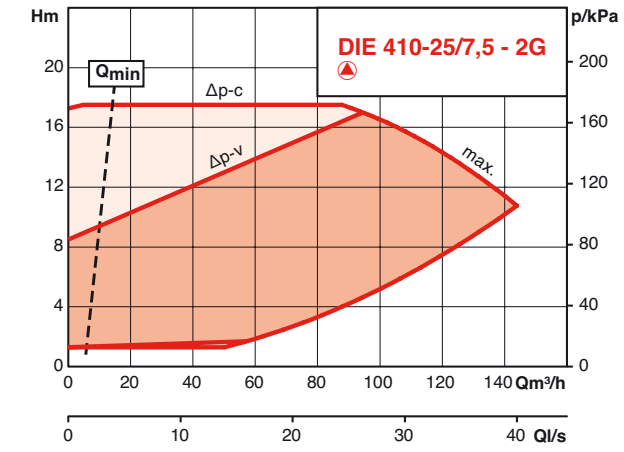

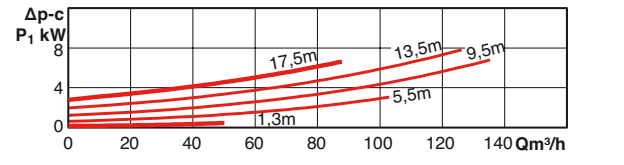

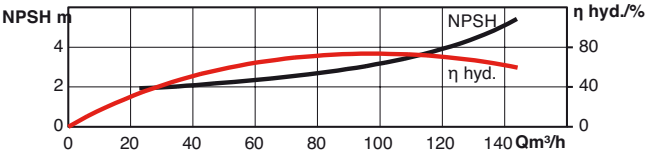

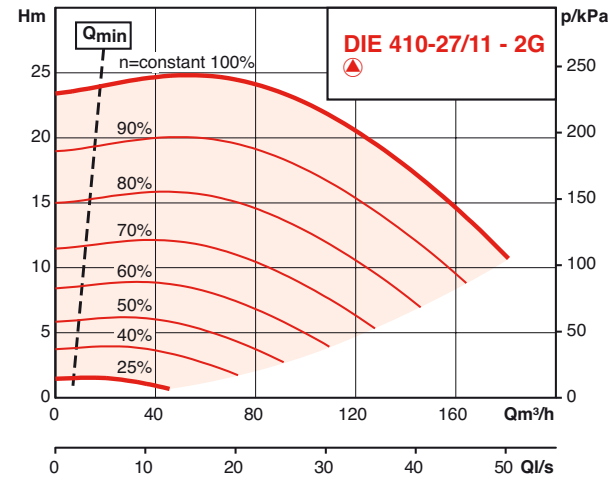

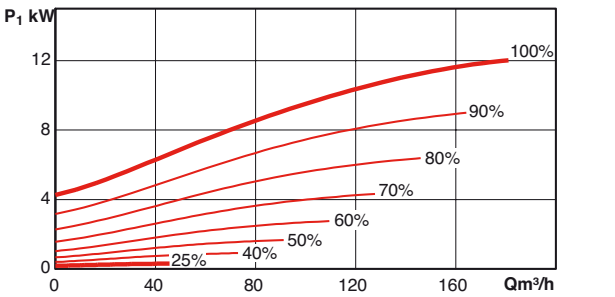

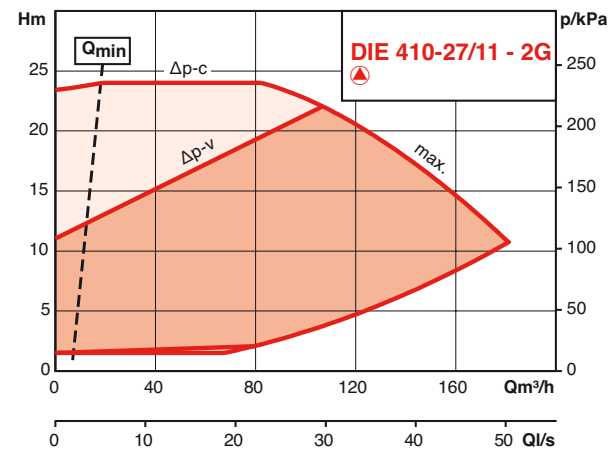

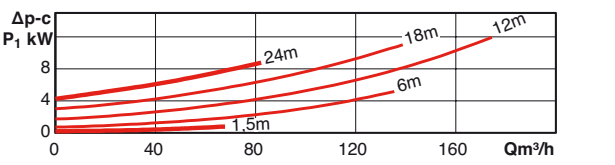

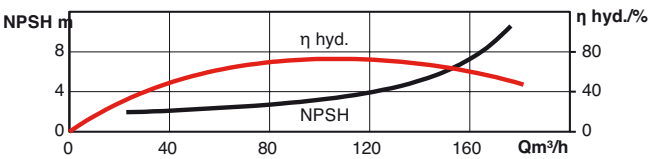

DIE

HYDRAULIC PERFORMANCES - OPERATION IN NORMAL / RESCUE MODE

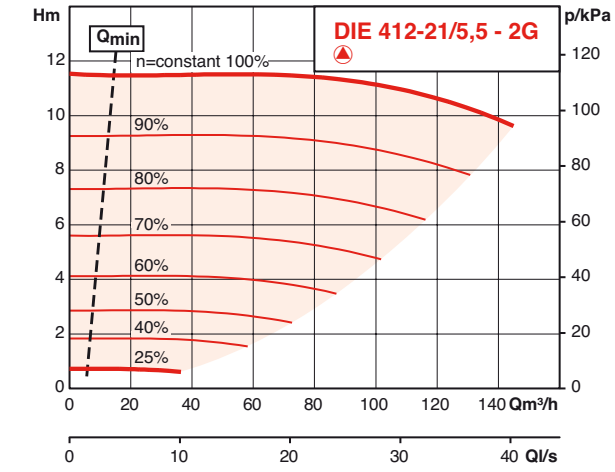

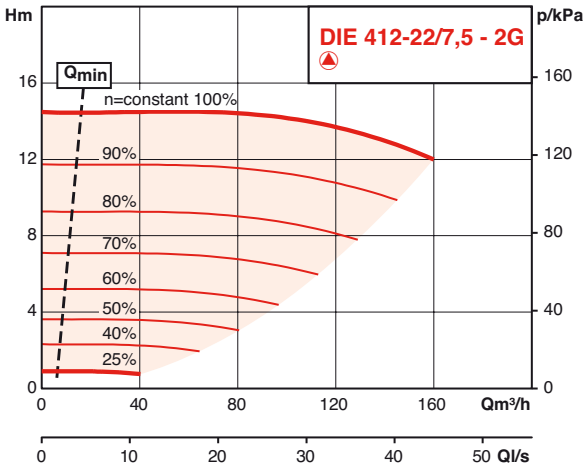

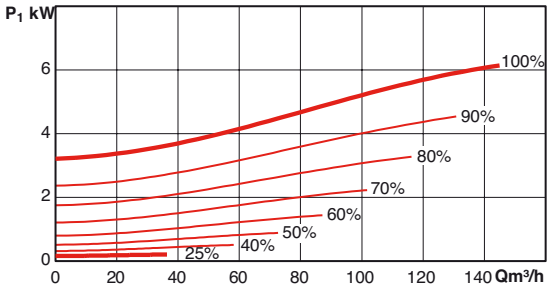

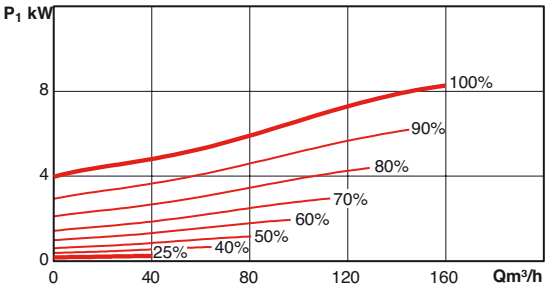

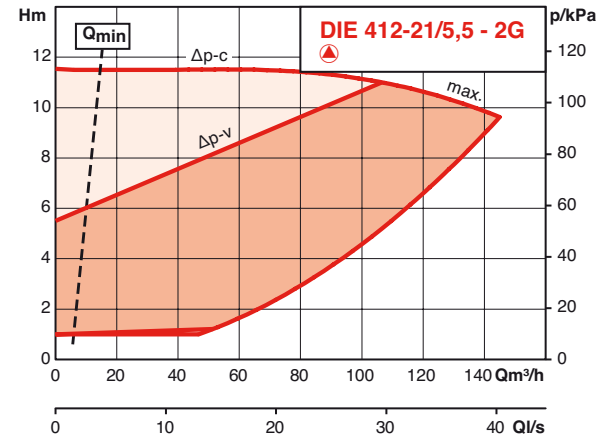

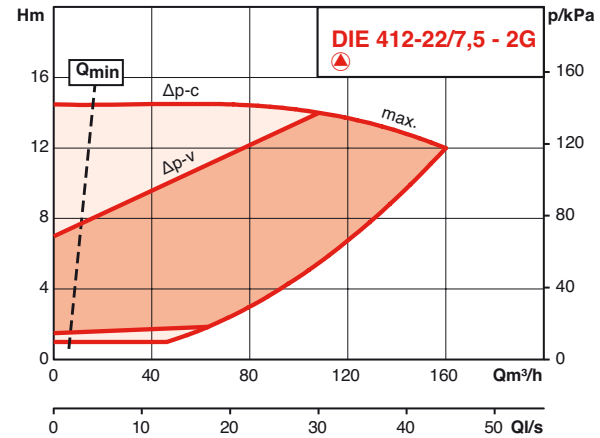

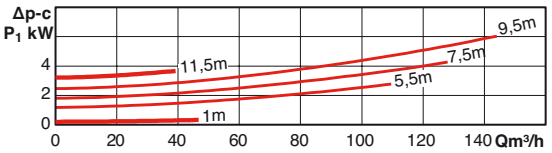

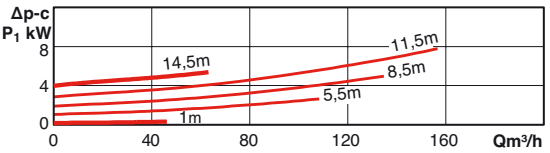

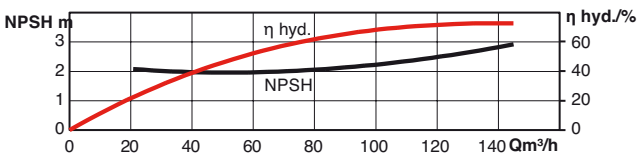

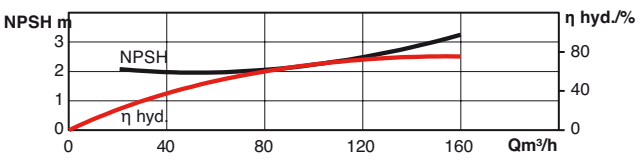

HYDRAULIC PERFORMANCESS - OPERATION IN NORMAL / RESCUE MODE

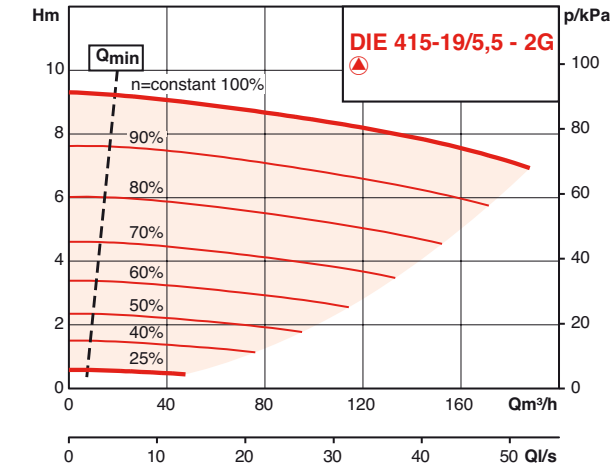

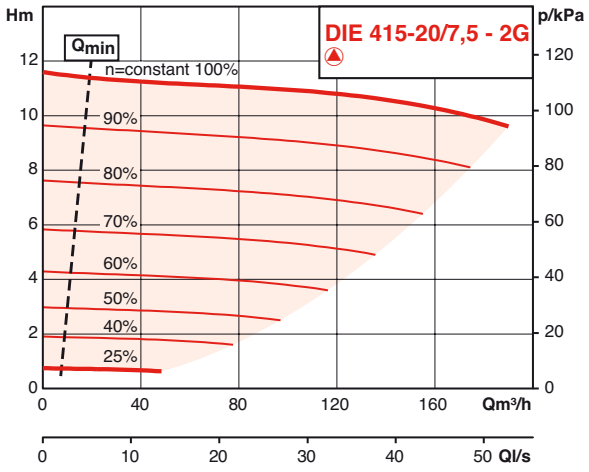

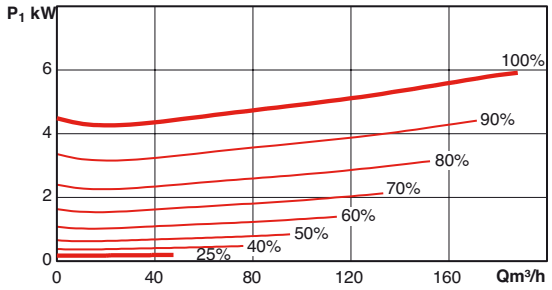

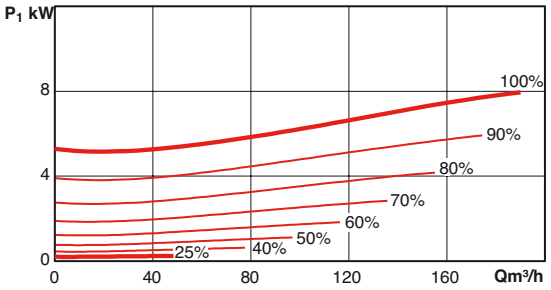

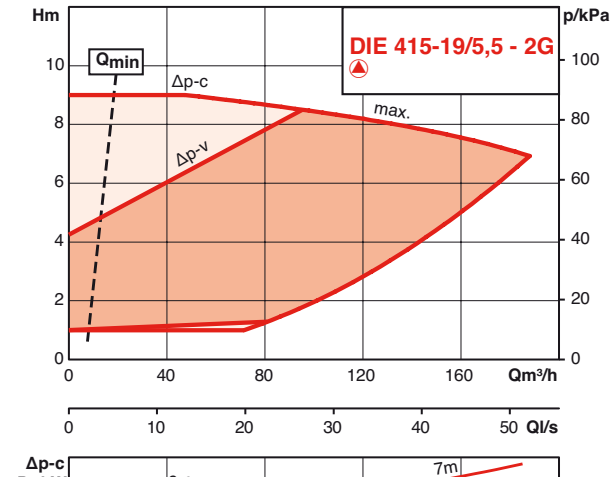

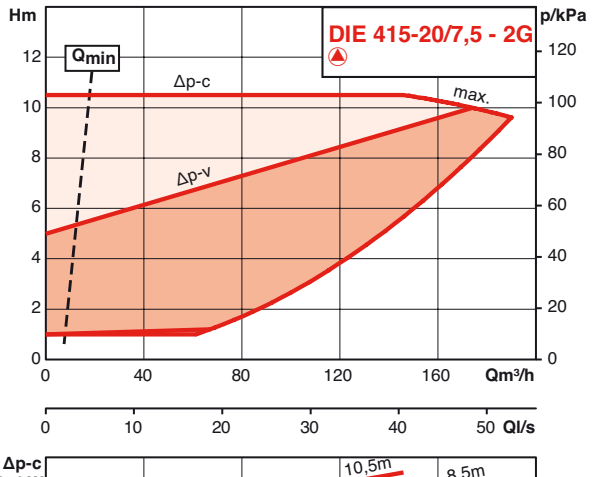

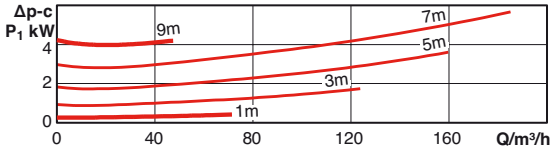

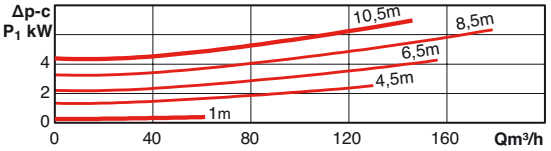

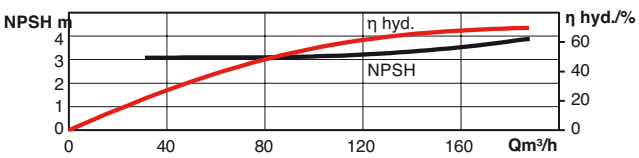

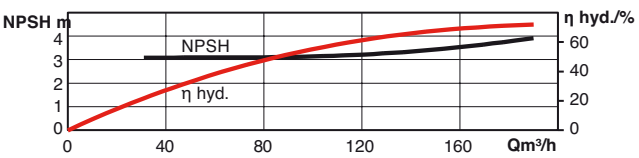

DIE

HYDRAULIC PERFORMANCES - OPERATION IN NORMAL / RESCUE MODE

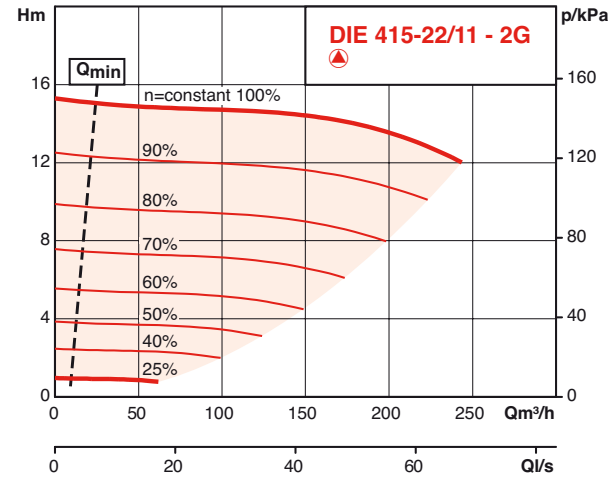

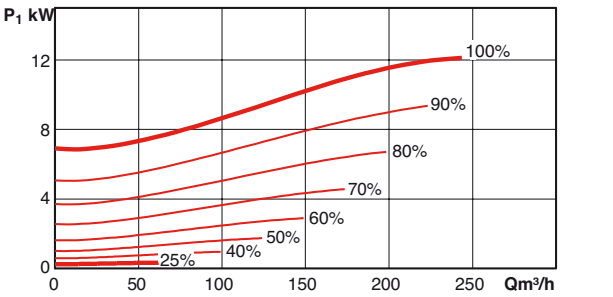

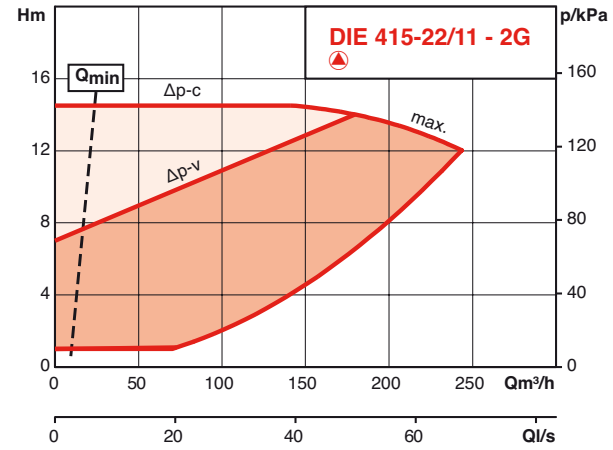

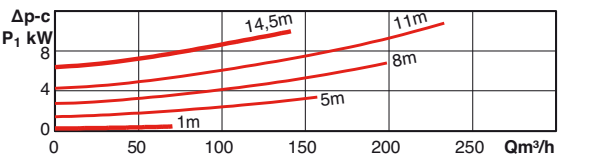

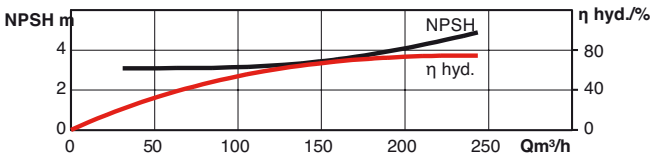

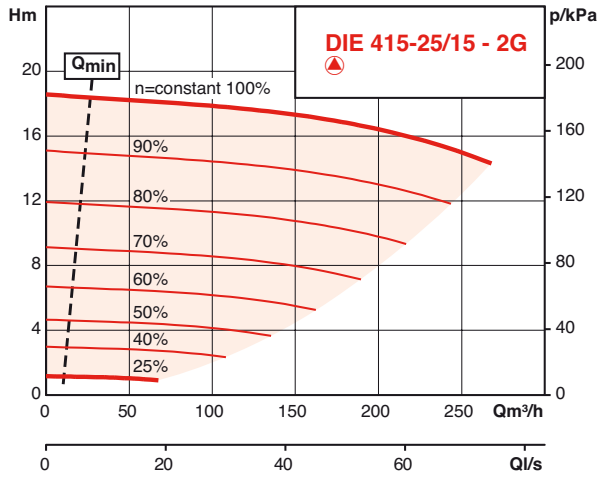

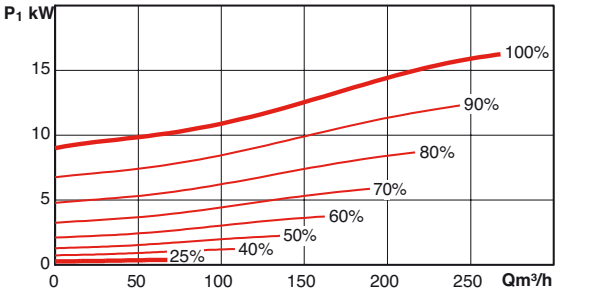

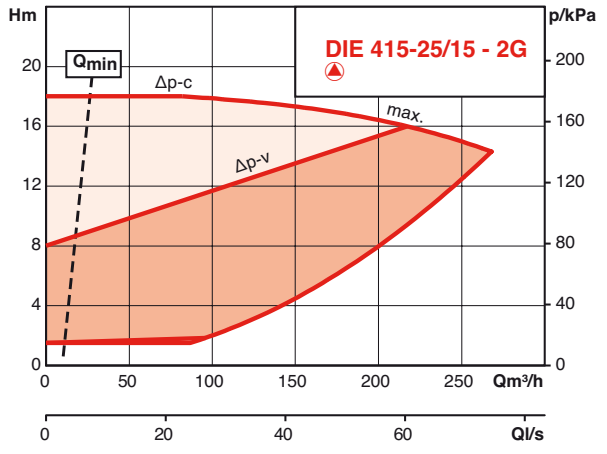

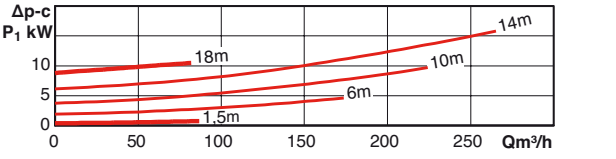

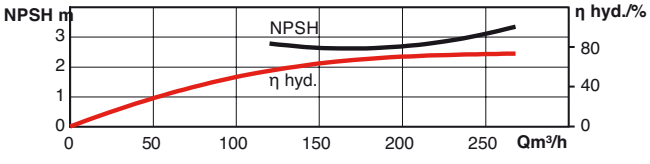

HYDRAULIC PERFORMANCES - OPERATION IN NORMAL / RESCUE MODE

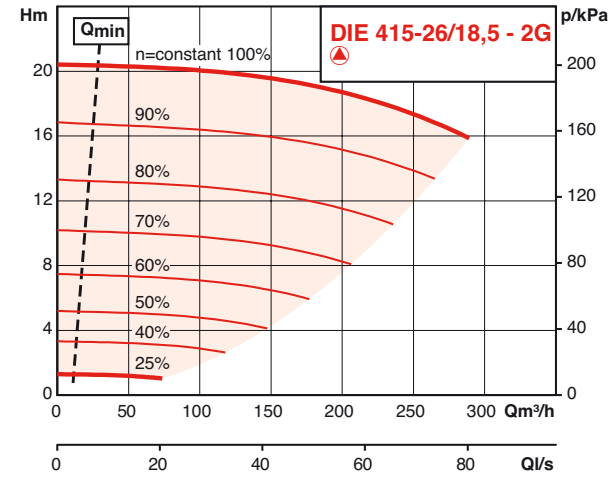

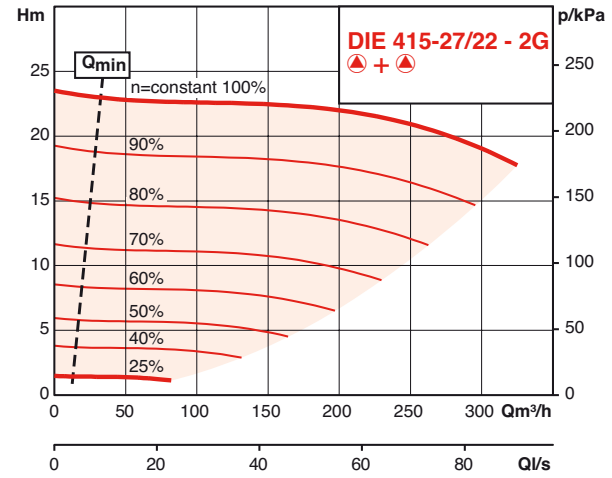

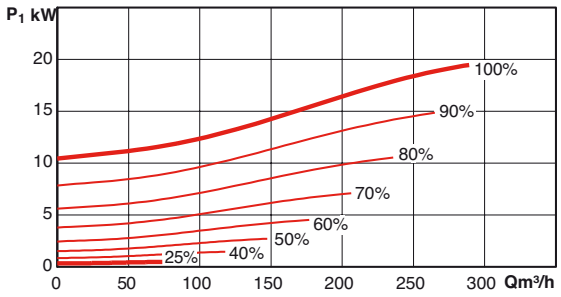

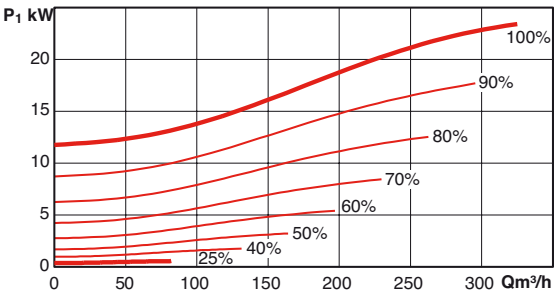

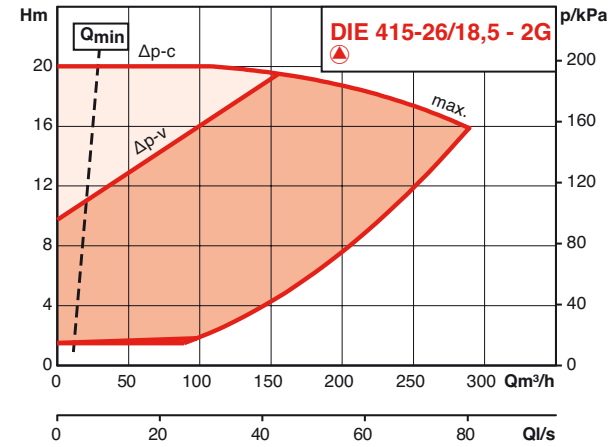

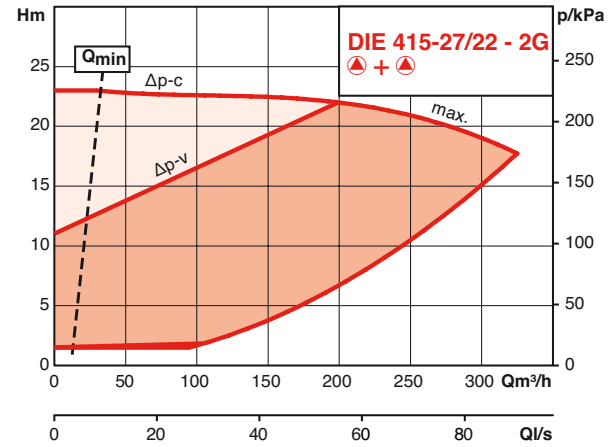

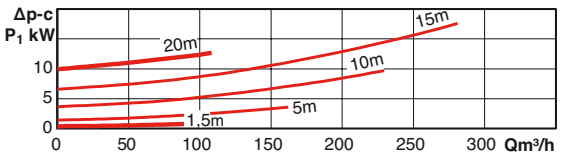

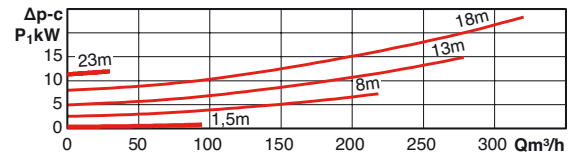

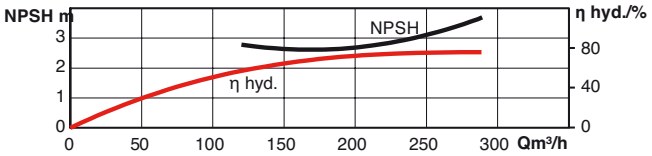

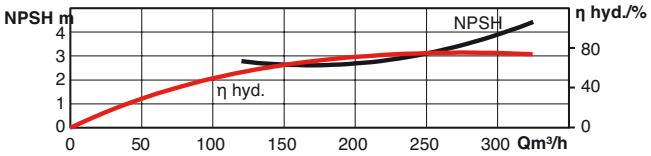

DIE

HYDRAULIC PERFORMANCES - OPERATION IN NORMAL / RESCUE MODE

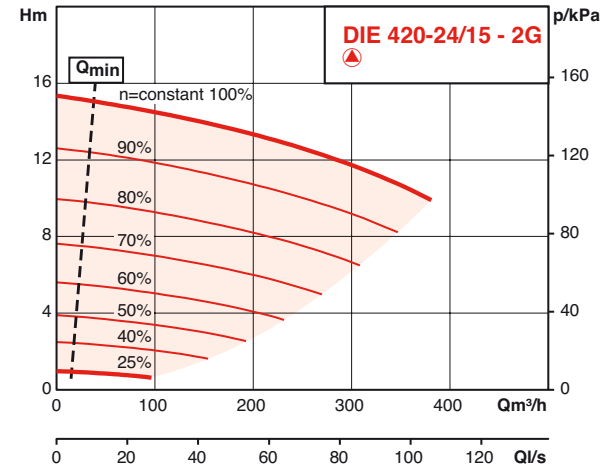

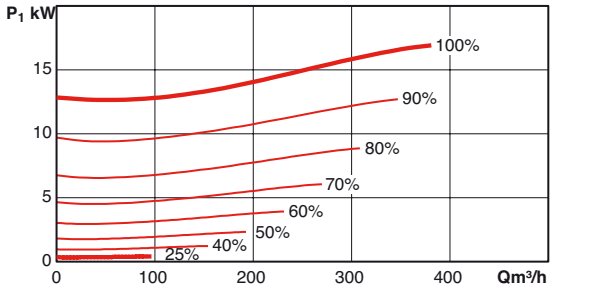

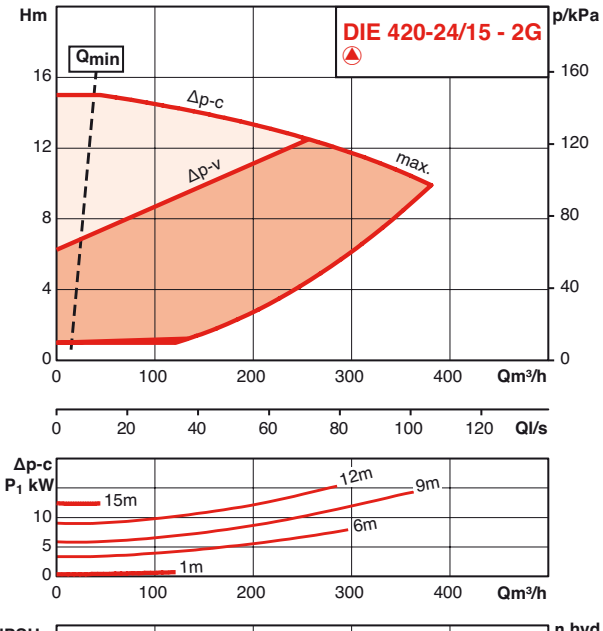

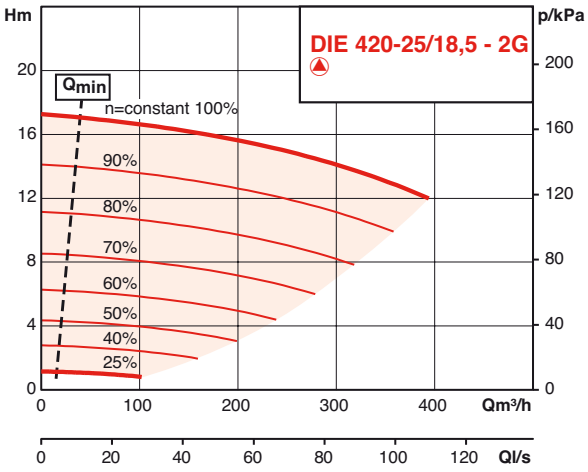

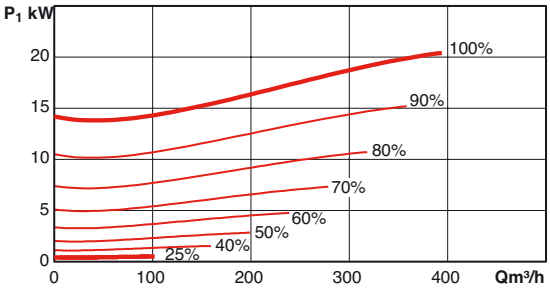

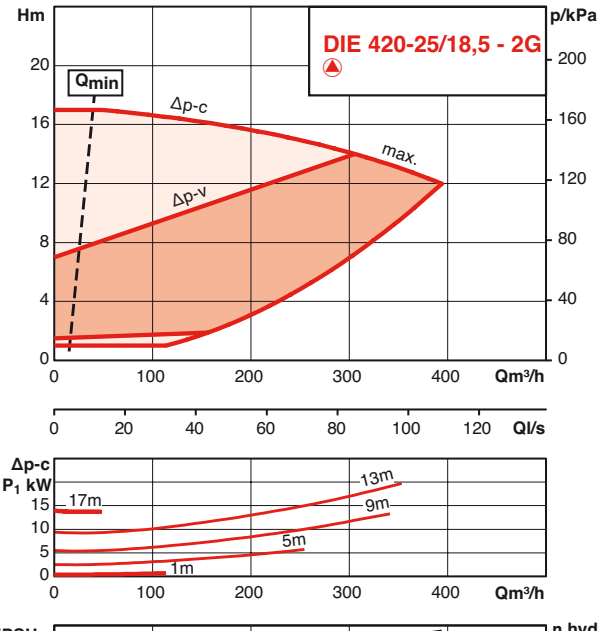

HYDRAULIC PERFORMANCES - OPERATION IN NORMAL / RESCUE MODE

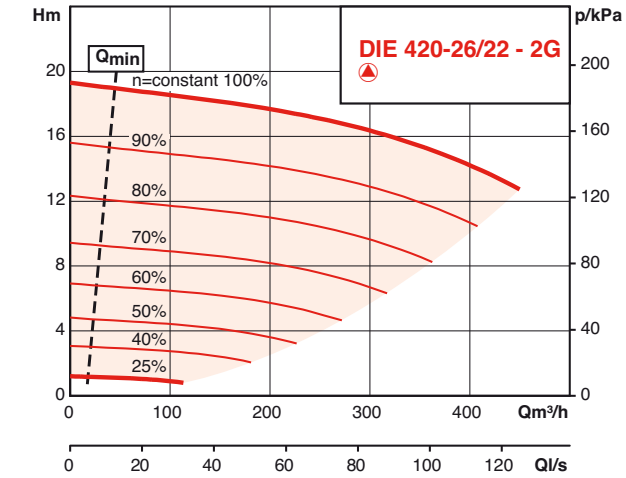

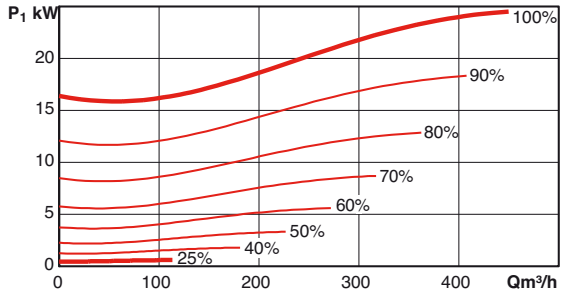

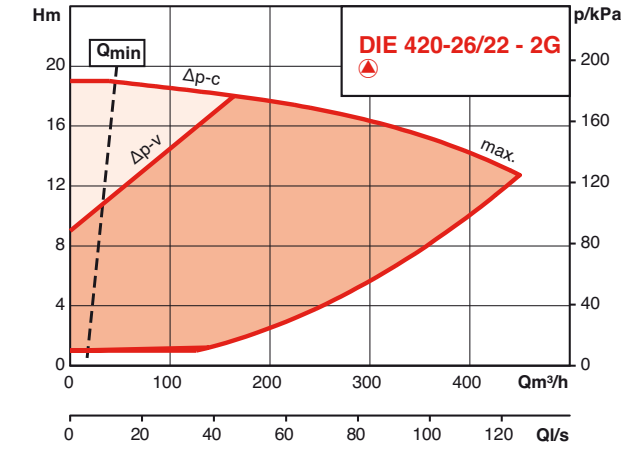

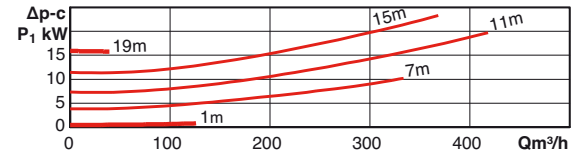

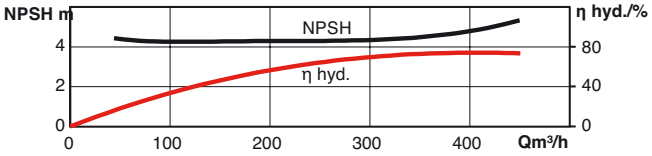

DIE

HYDRAULIC PERFORMANCES – OPERATING 2 PUMPS IN PARALLEL

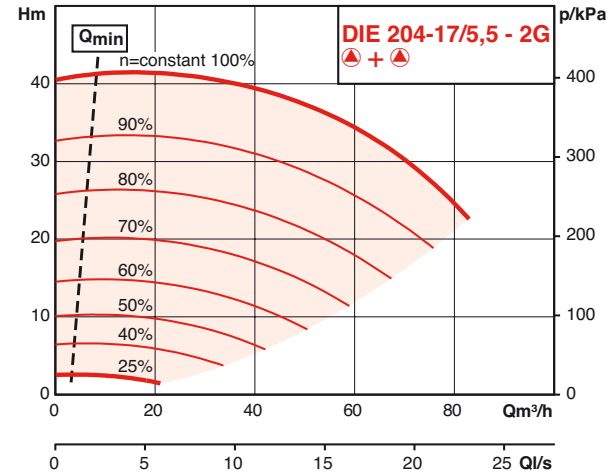

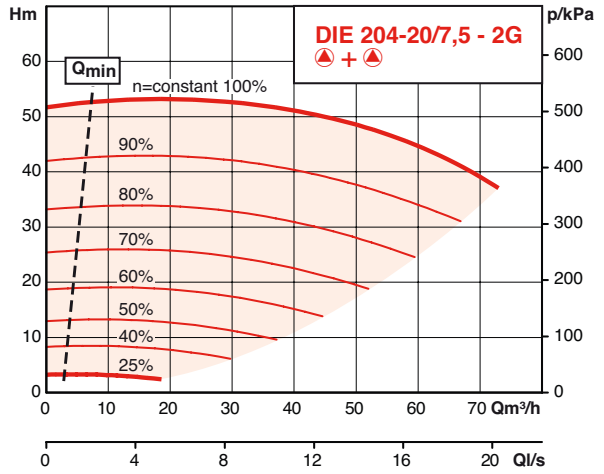

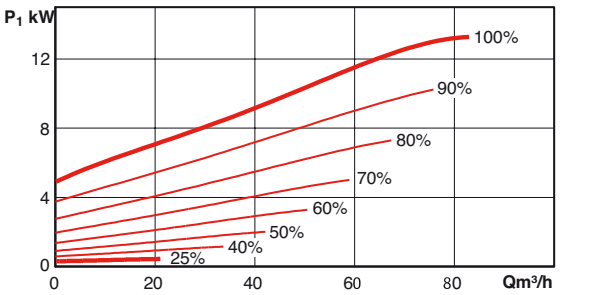

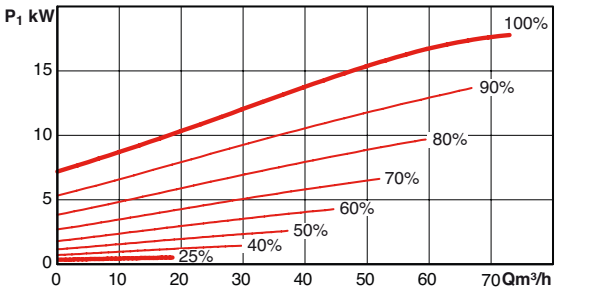

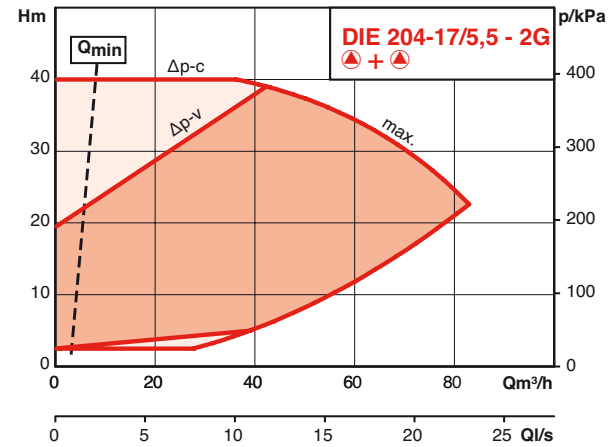

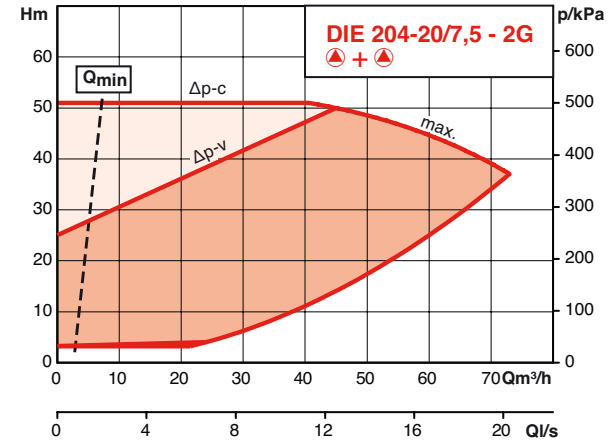

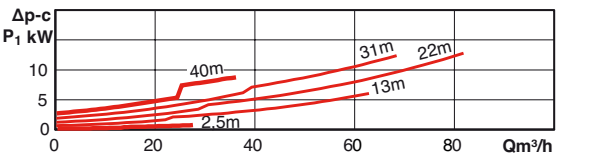

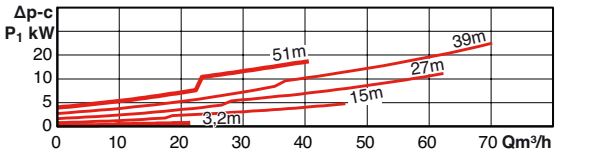

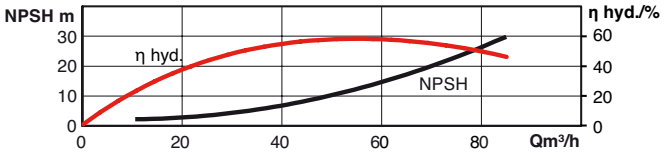

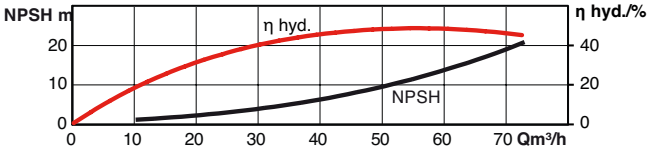

HYDRAULIC PERFORMANCES – OPERATING 2 PUMPS IN PARALLEL

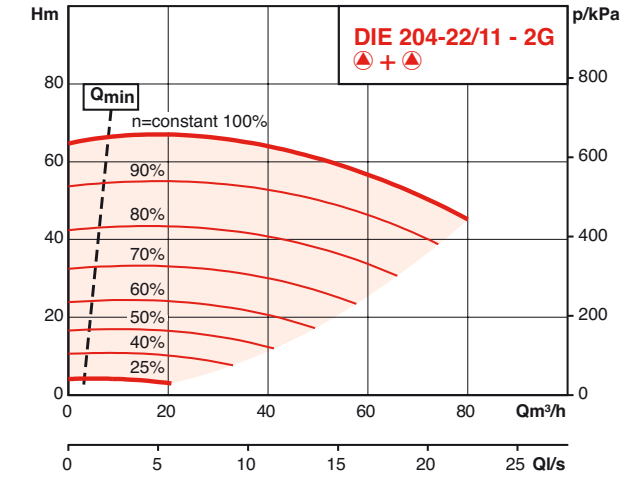

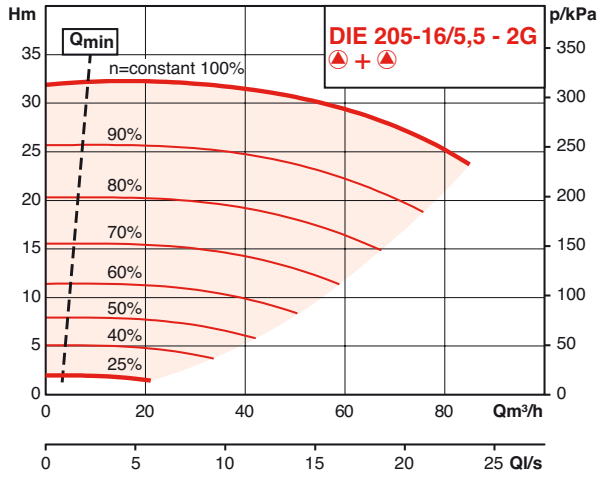

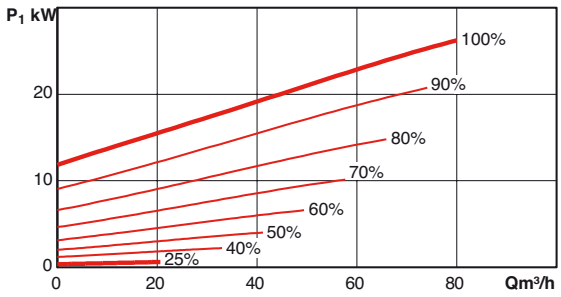

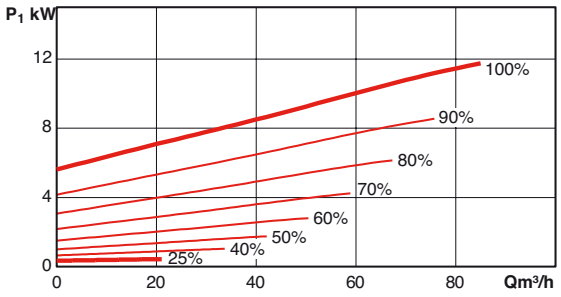

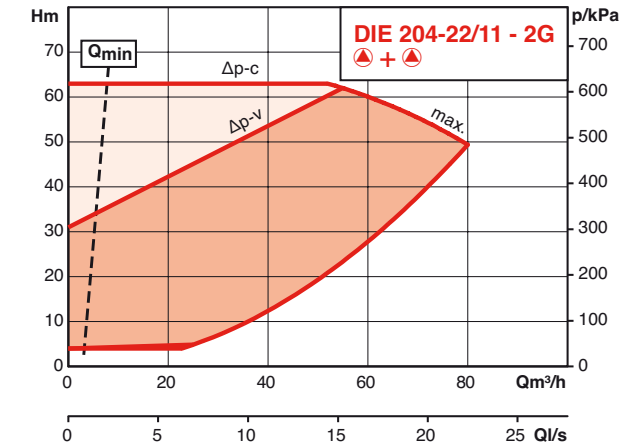

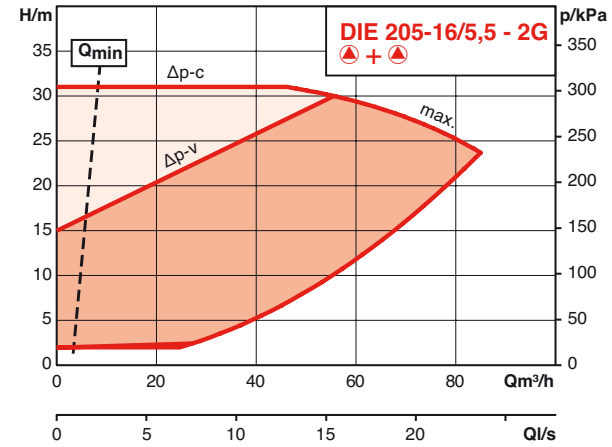

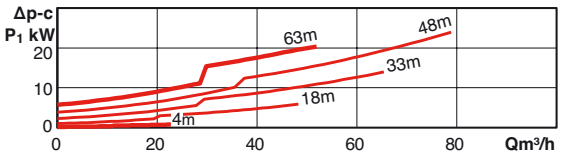

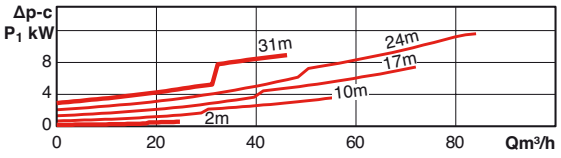

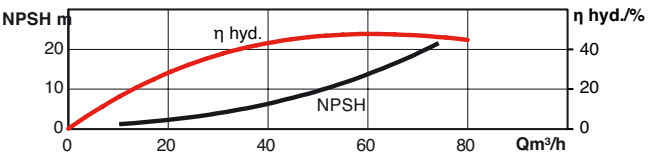

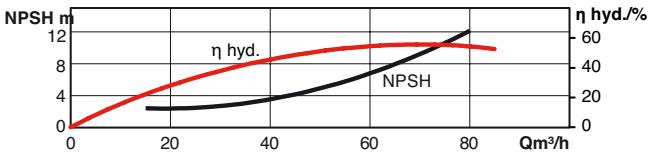

DIE

HYDRAULIC PERFORMANCES – OPERATING 2 PUMPS IN PARALLEL

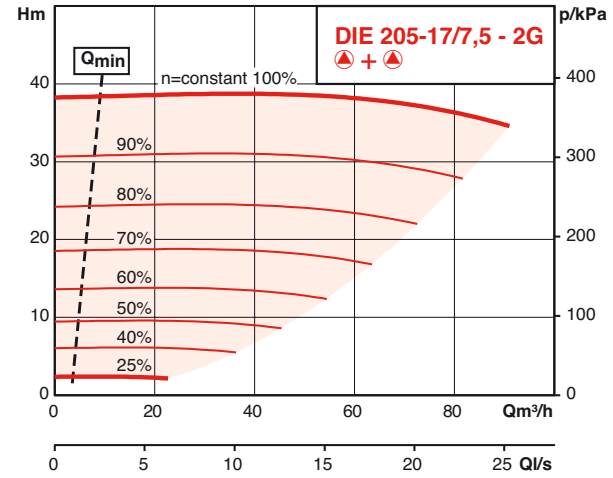

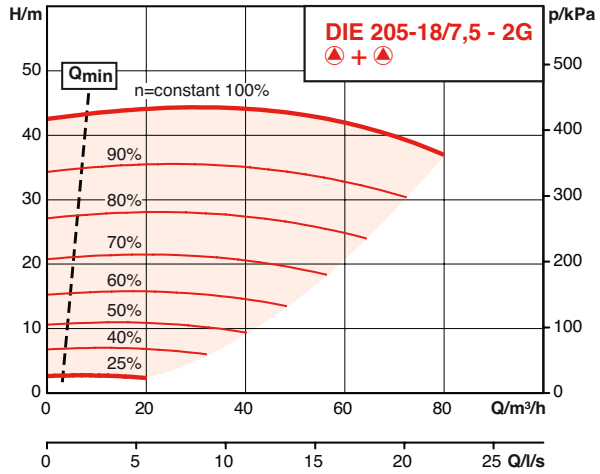

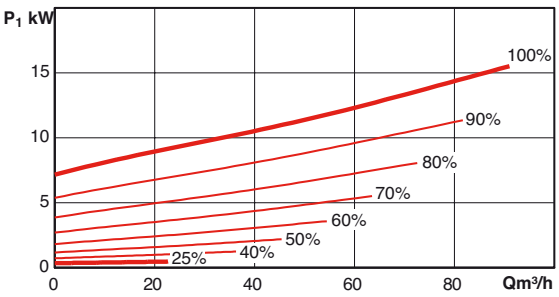

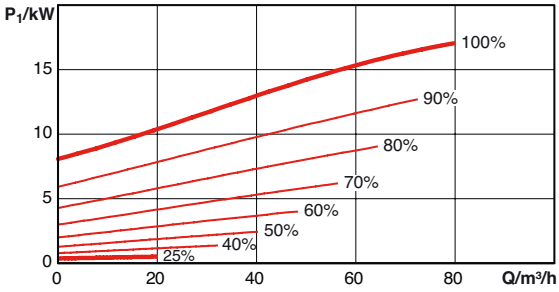

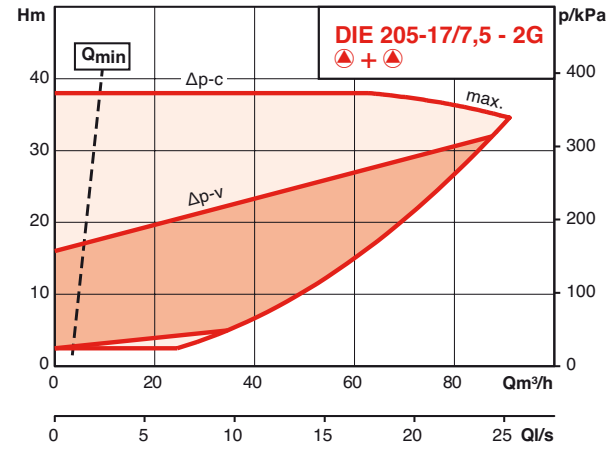

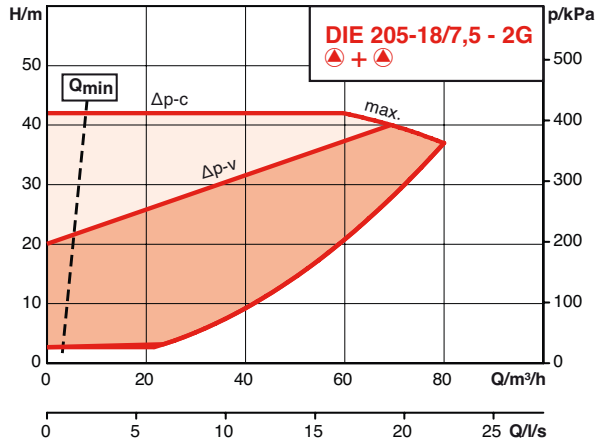

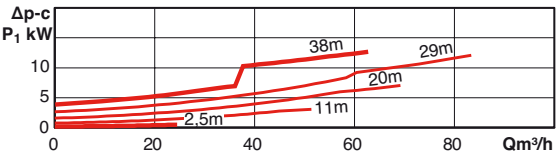

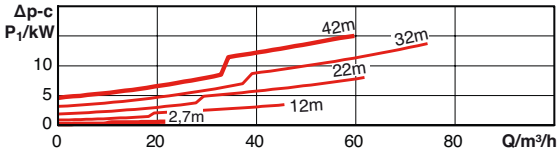

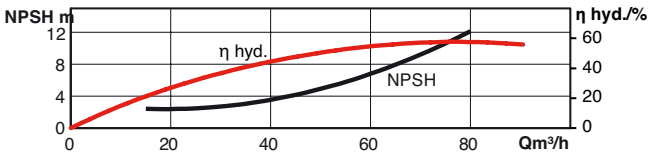

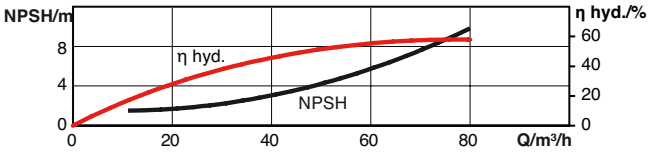

HYDRAULIC PERFORMANCES – OPERATING 2 PUMPS IN PARALLEL

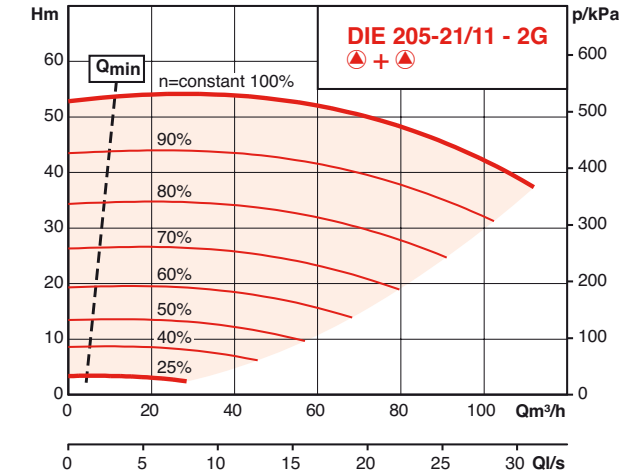

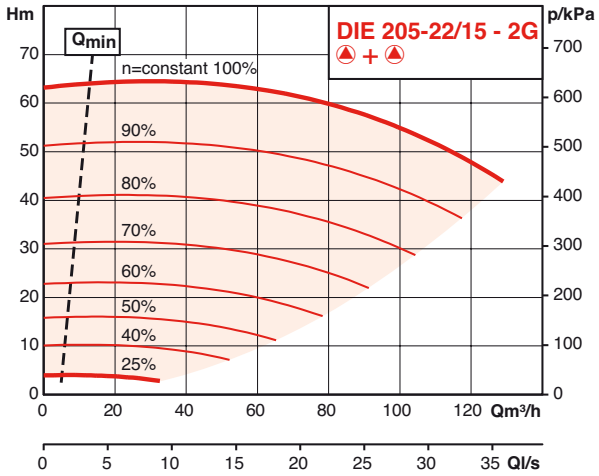

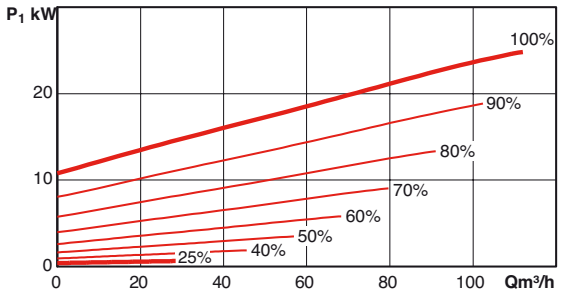

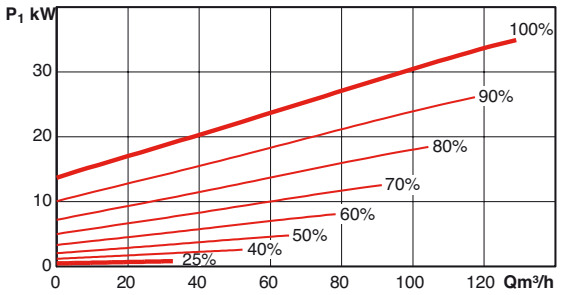

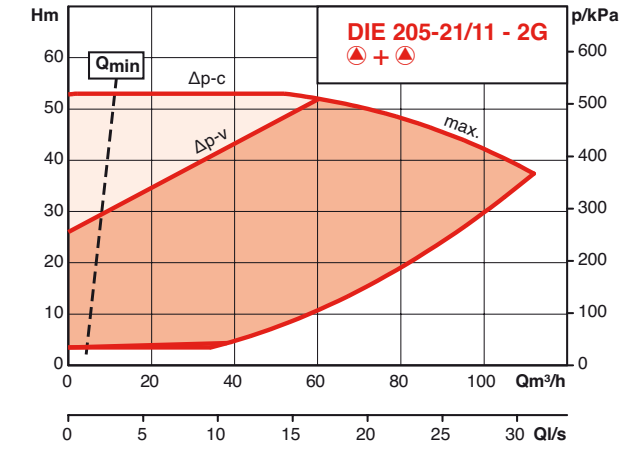

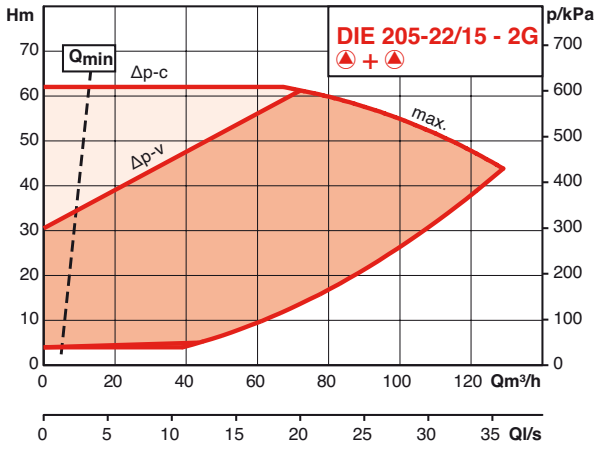

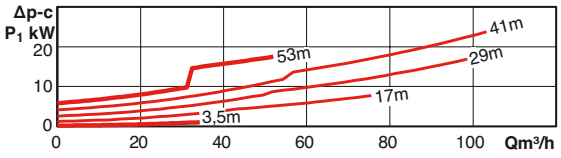

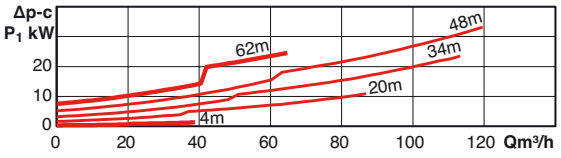

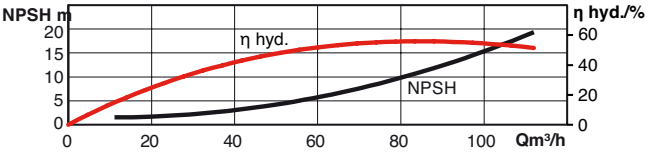

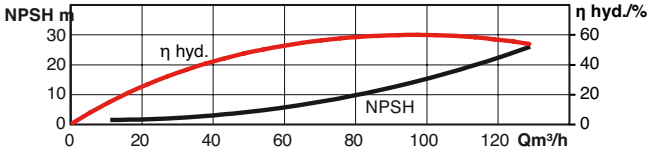

DIE

HYDRAULIC PERFORMANCES – OPERATING 2 PUMPS IN PARALLEL

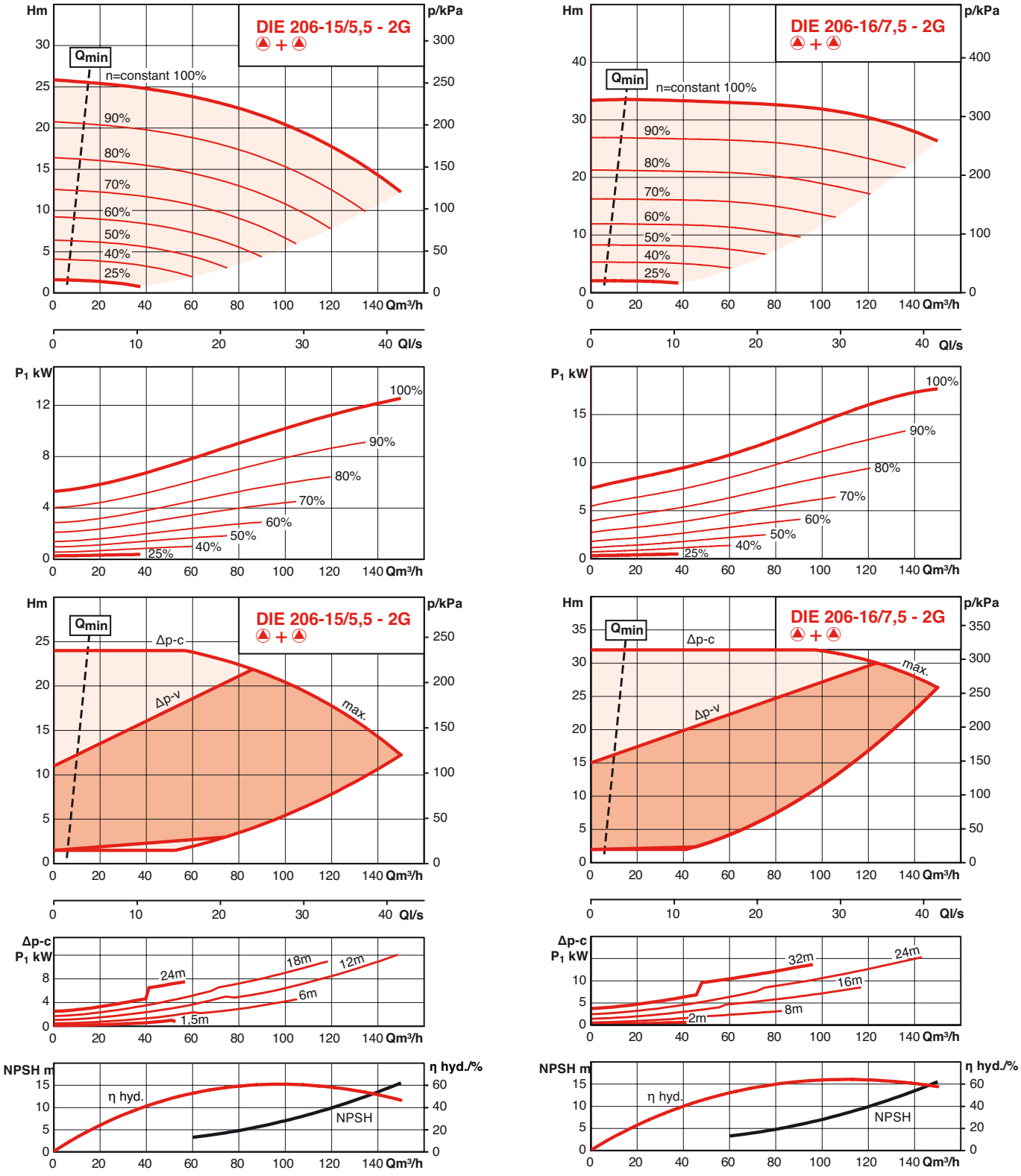

HYDRAULIC PERFORMANCES – OPERATING 2 PUMPS IN PARALLEL

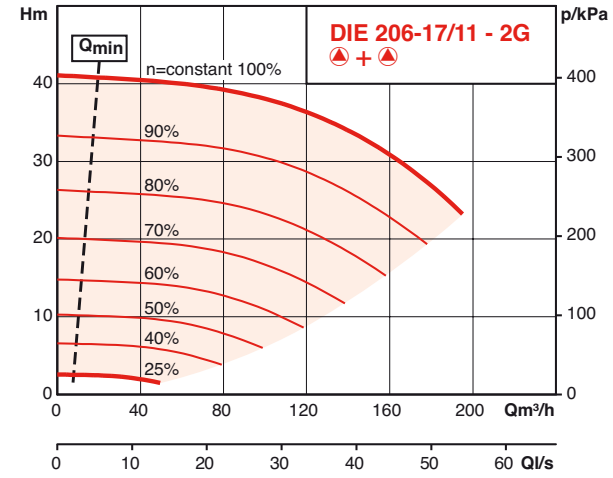

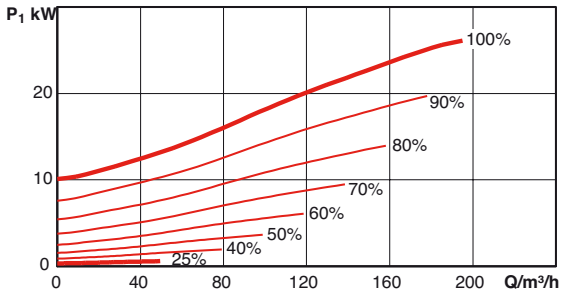

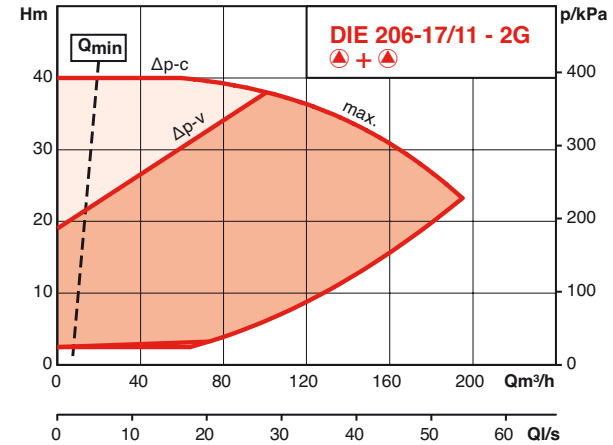

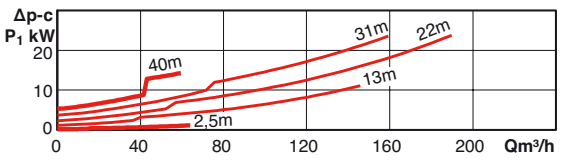

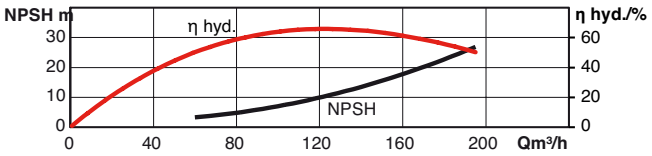

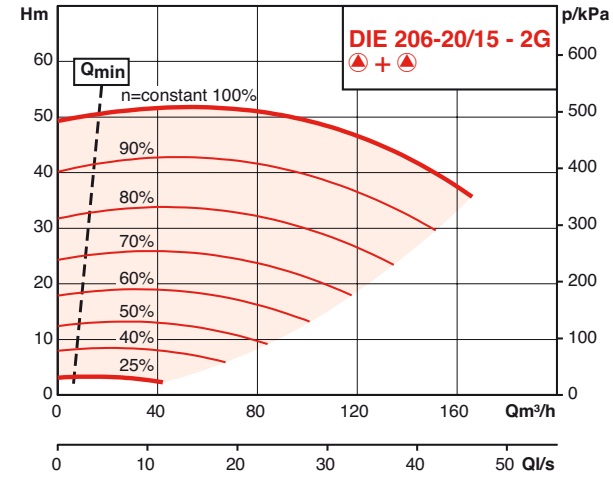

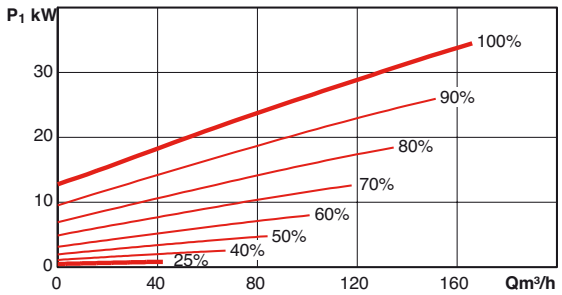

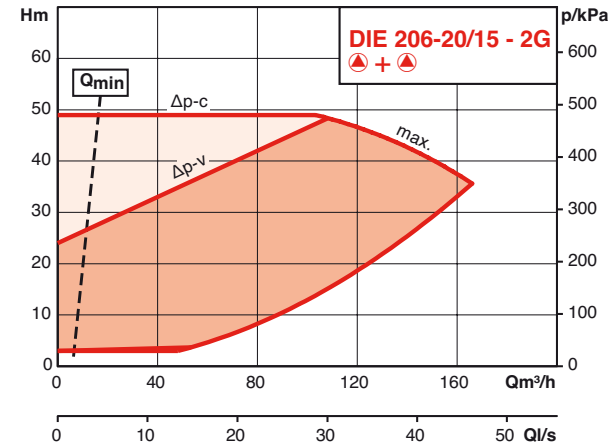

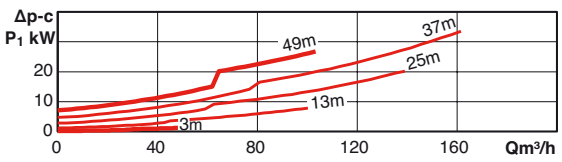

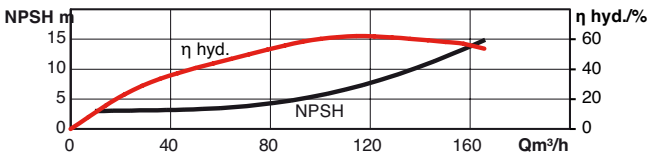

DIE

HYDRAULIC PERFORMANCES – OPERATING 2 PUMPS IN PARALLEL

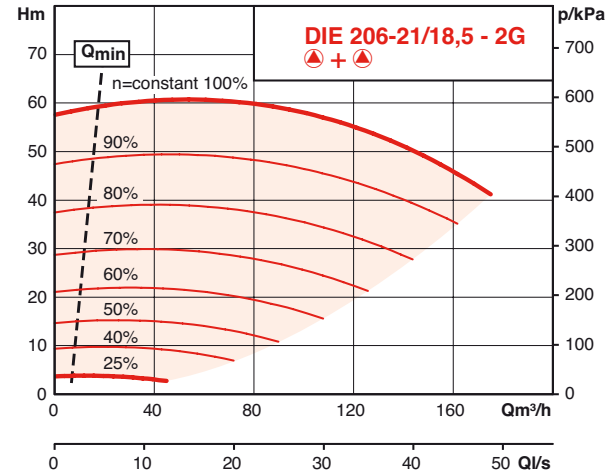

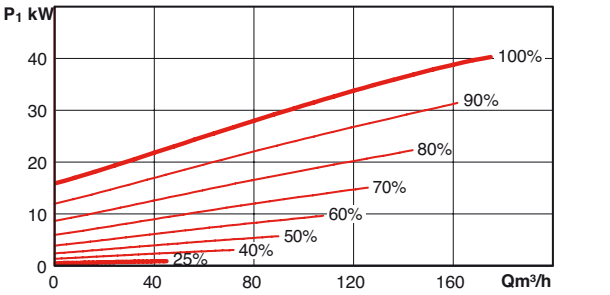

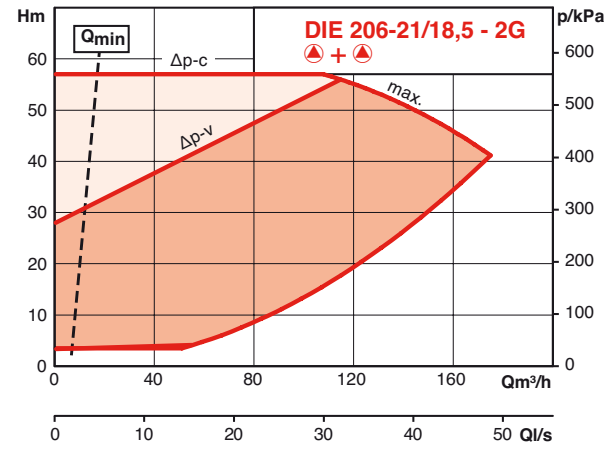

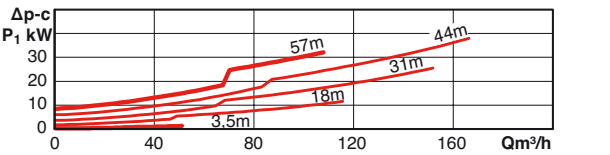

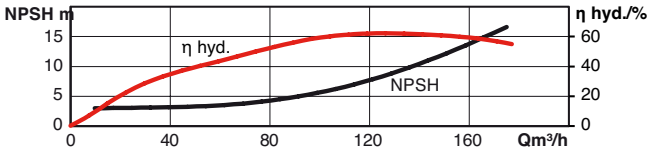

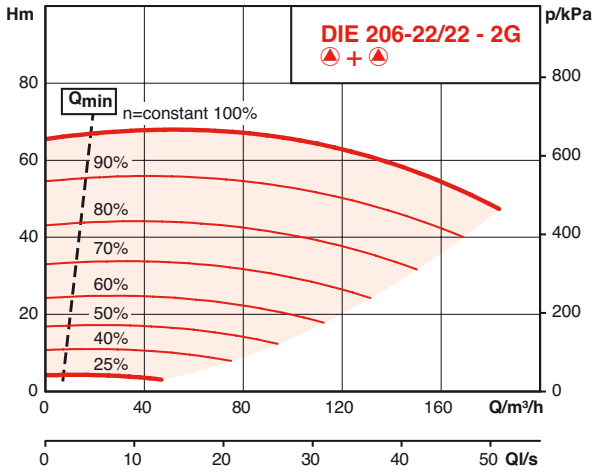

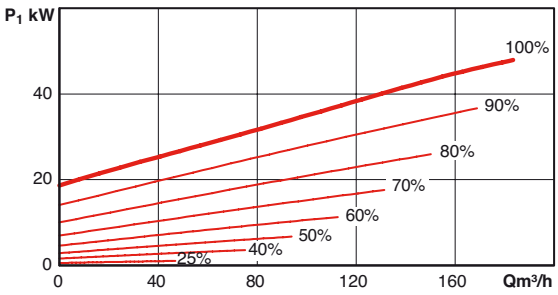

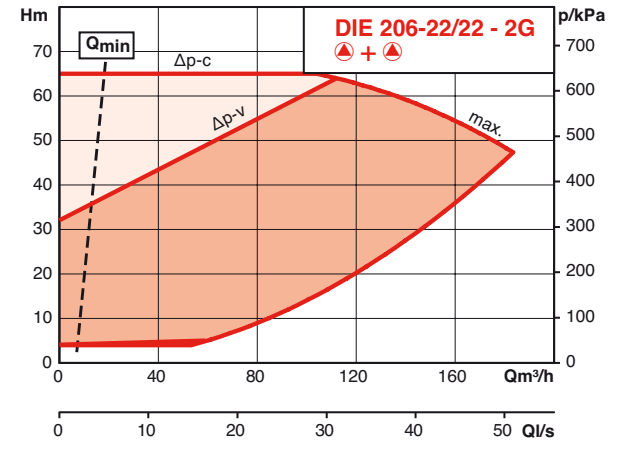

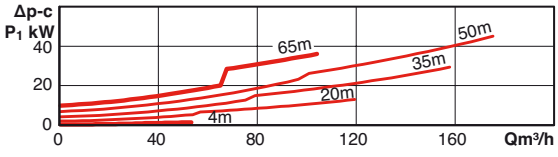

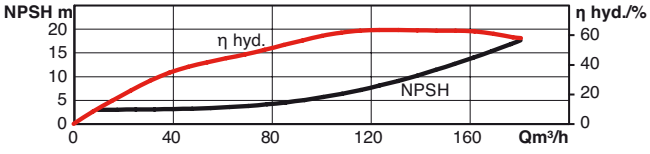

HYDRAULIC PERFORMANCES – OPERATING 2 PUMPS IN PARALLEL

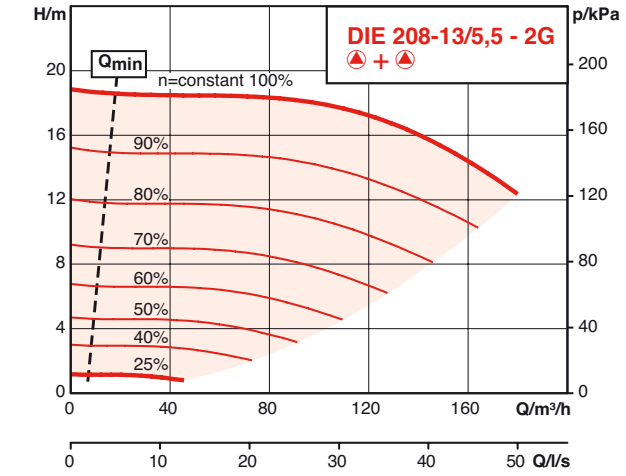

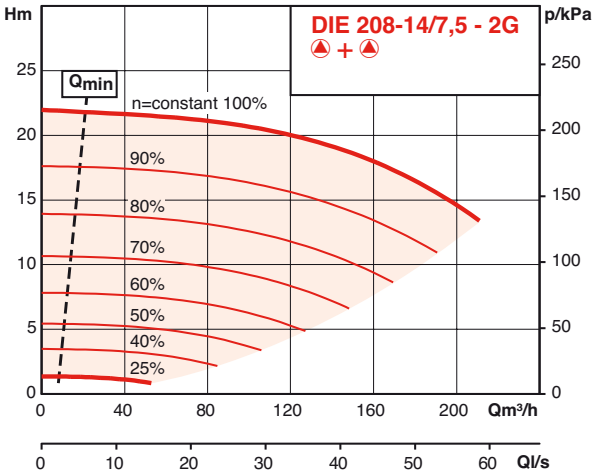

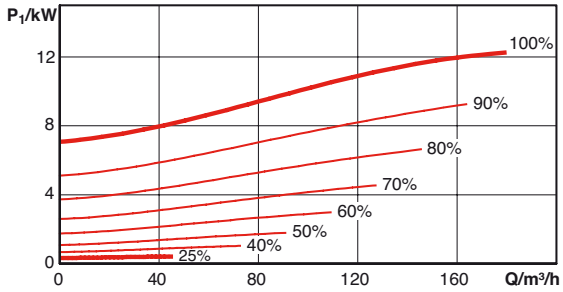

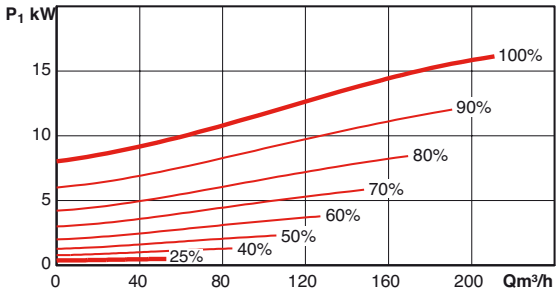

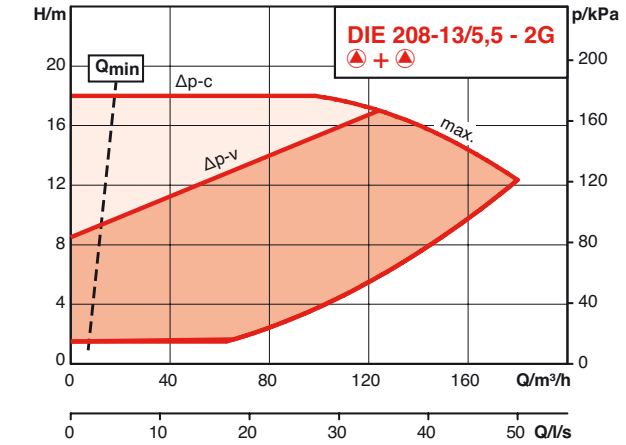

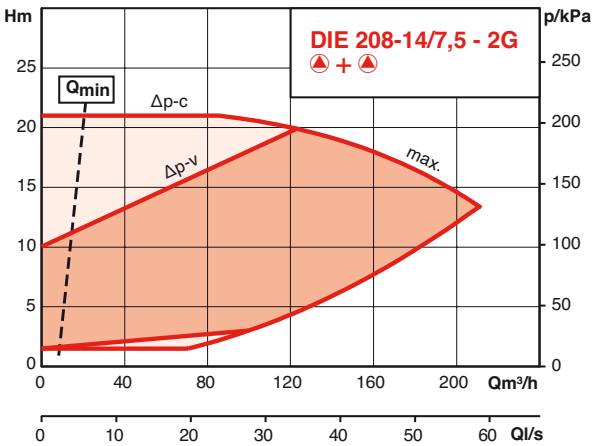

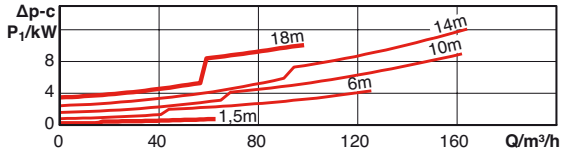

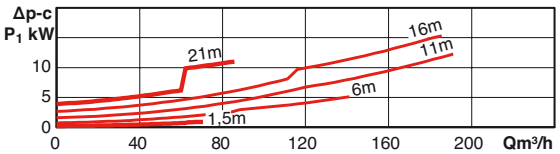

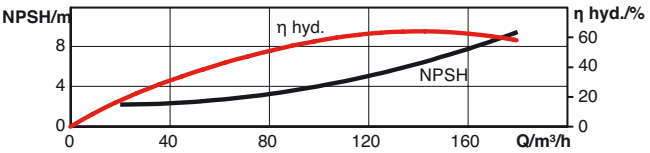

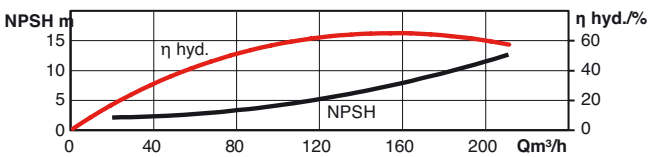

DIE

HYDRAULIC PERFORMANCES – OPERATING 2 PUMPS IN PARALLEL

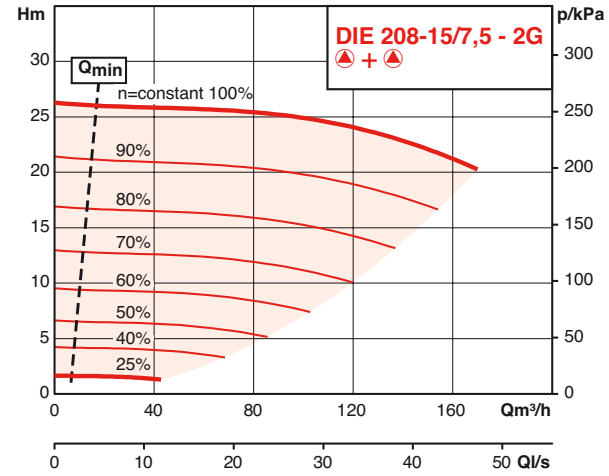

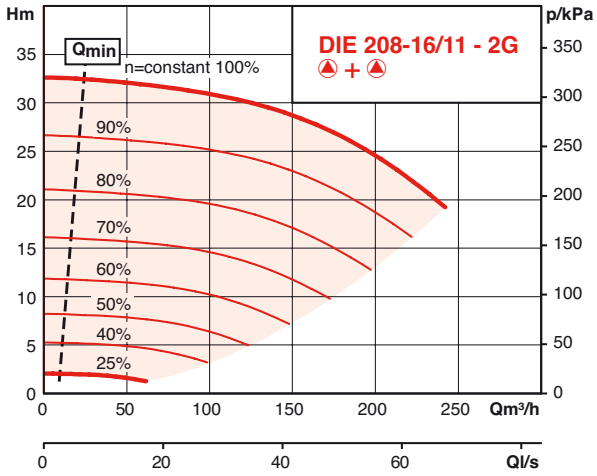

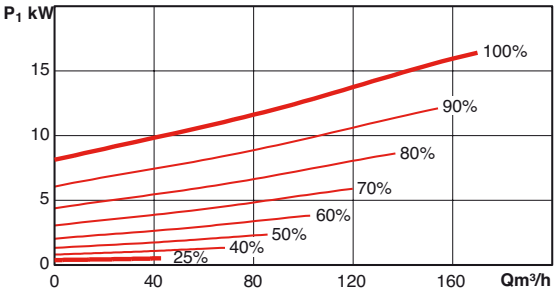

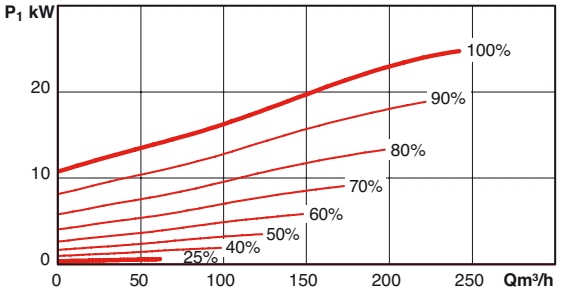

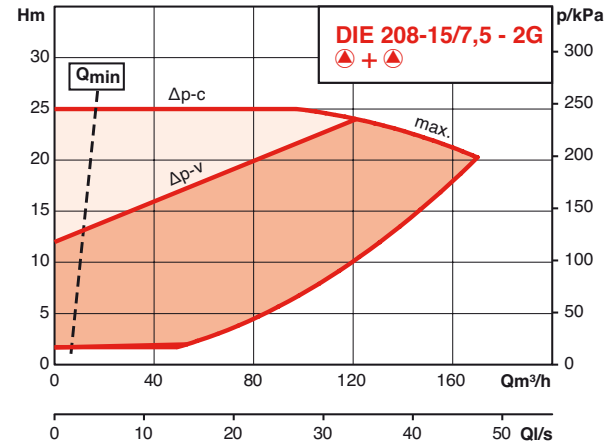

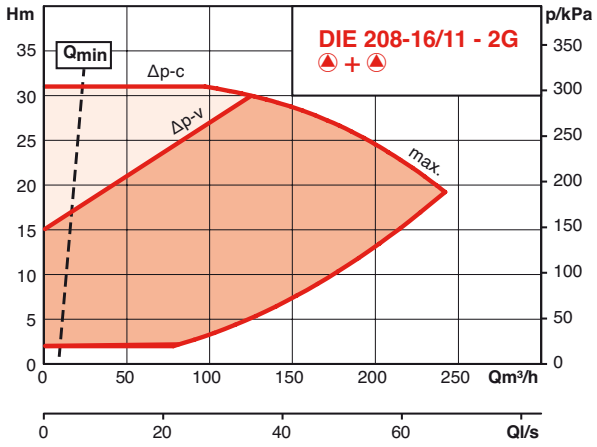

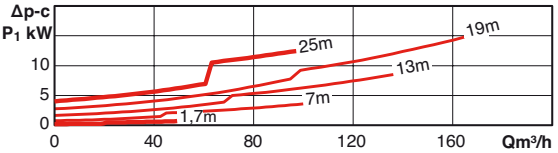

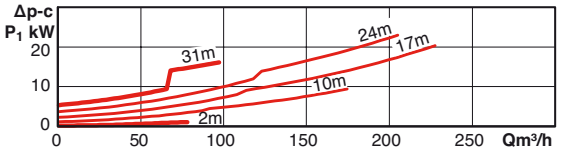

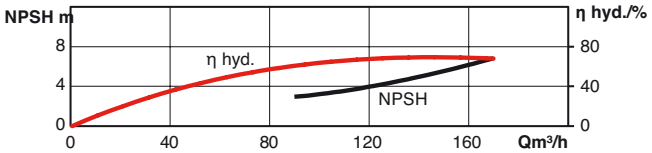

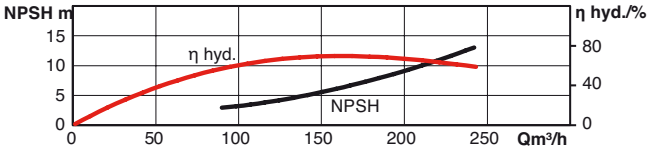

HYDRAULIC PERFORMANCES – OPERATING 2 PUMPS IN PARALLEL

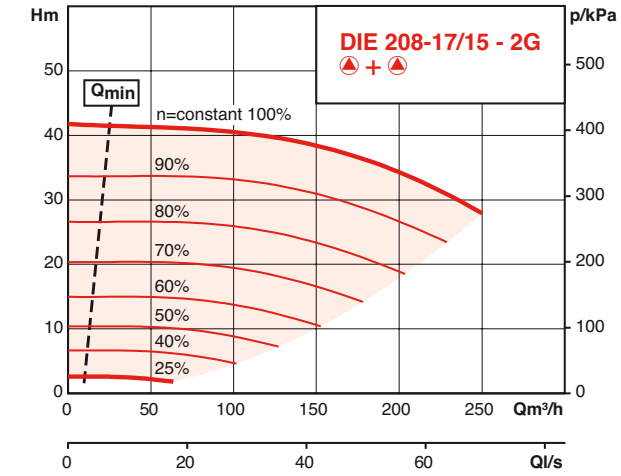

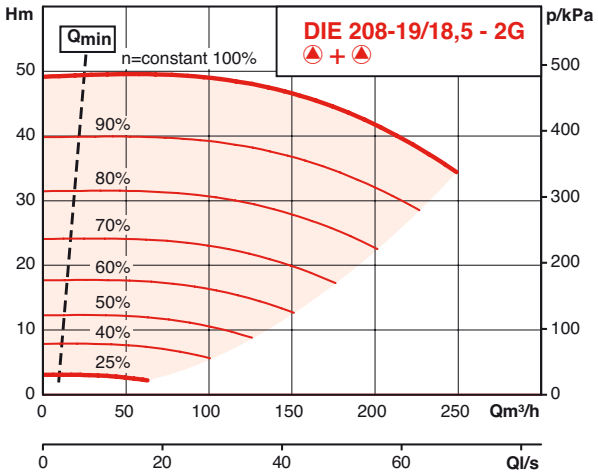

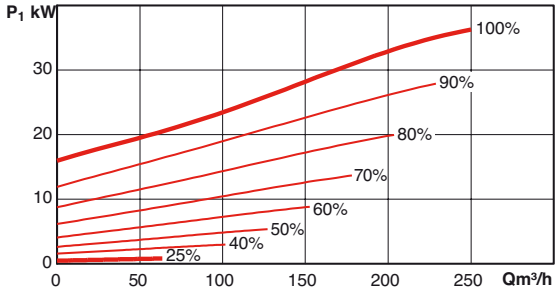

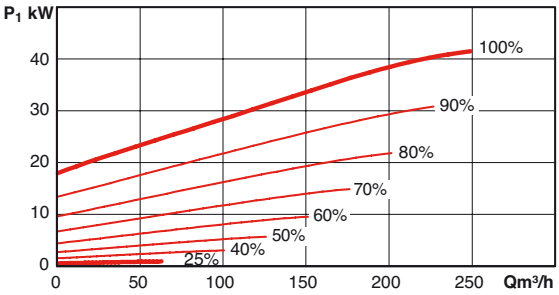

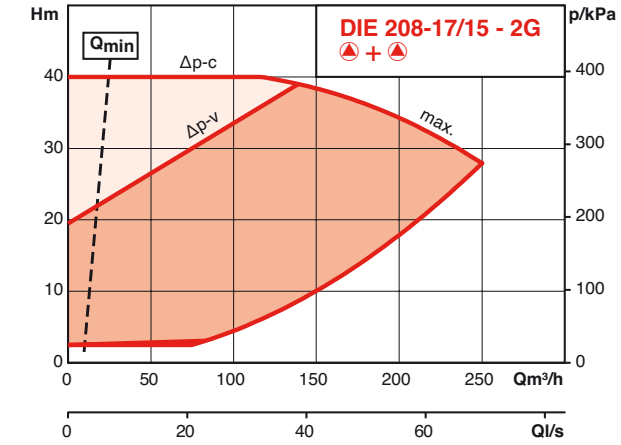

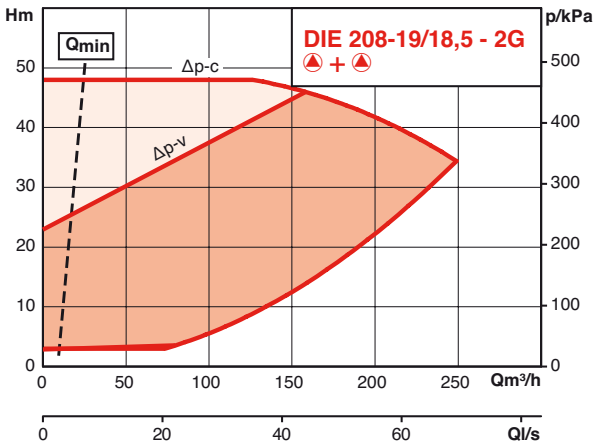

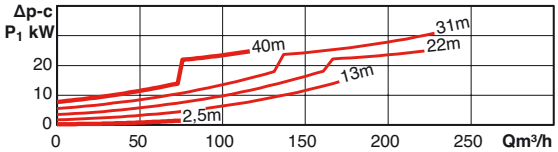

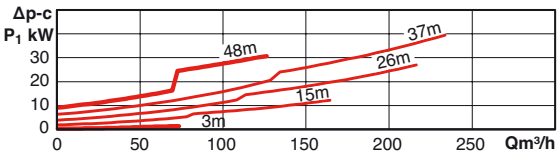

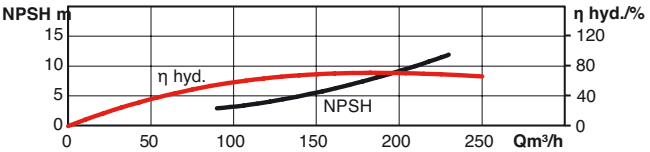

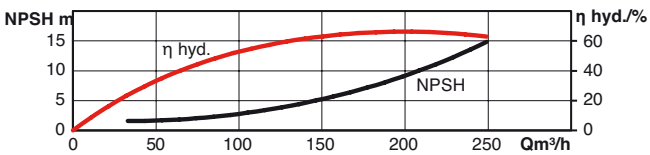

DIE

HYDRAULIC PERFORMANCES – OPERATING 2 PUMPS IN PARALLEL

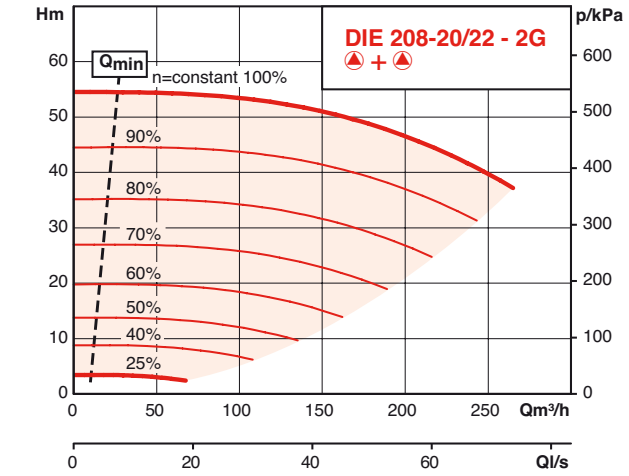

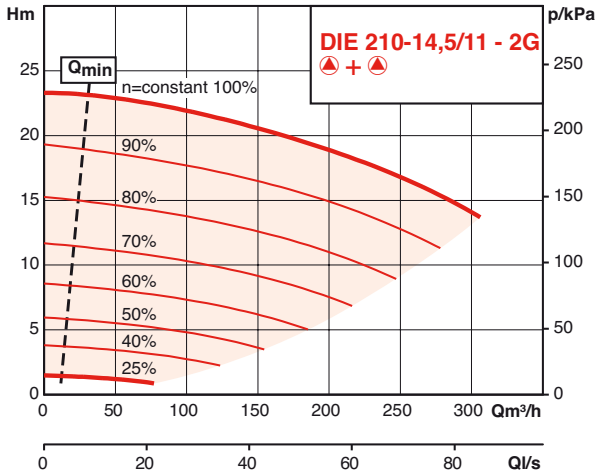

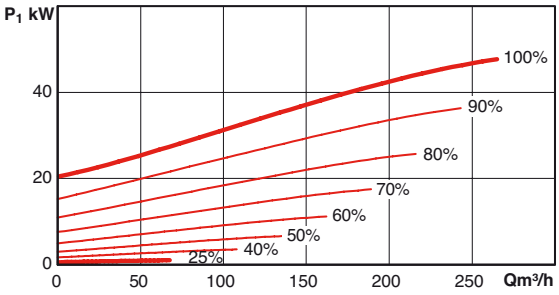

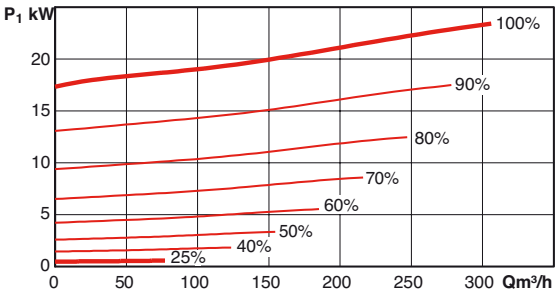

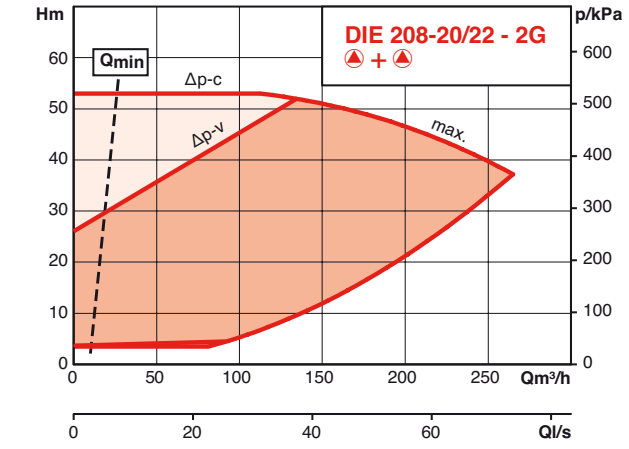

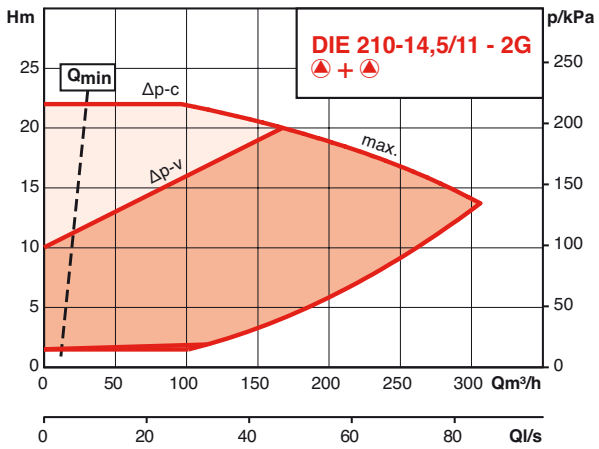

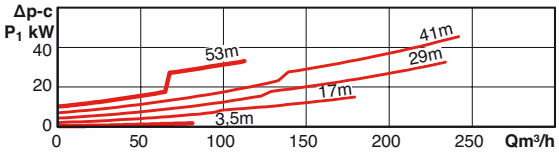

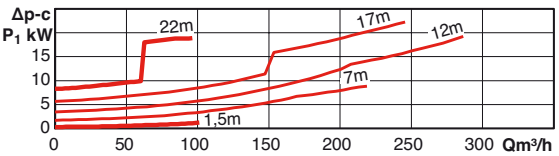

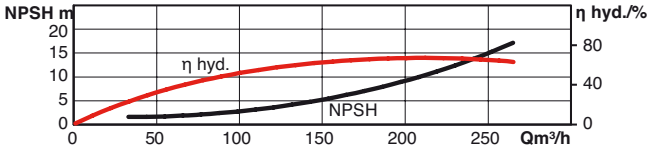

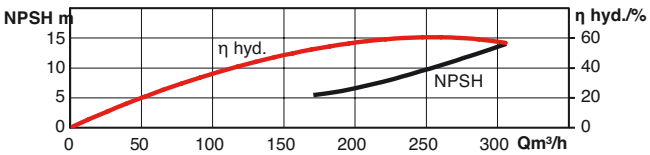

HYDRAULIC PERFORMANCES – OPERATING 2 PUMPS IN PARALLEL

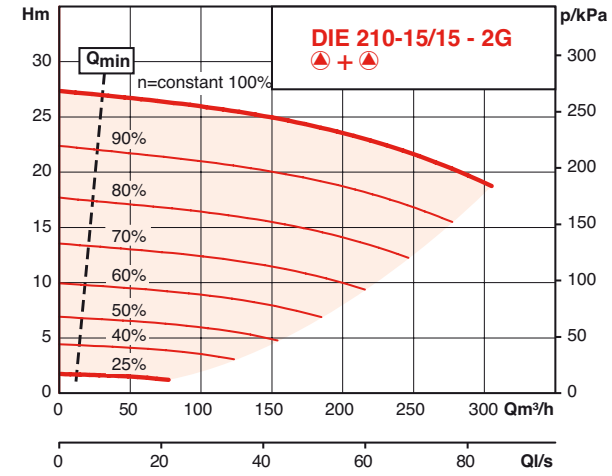

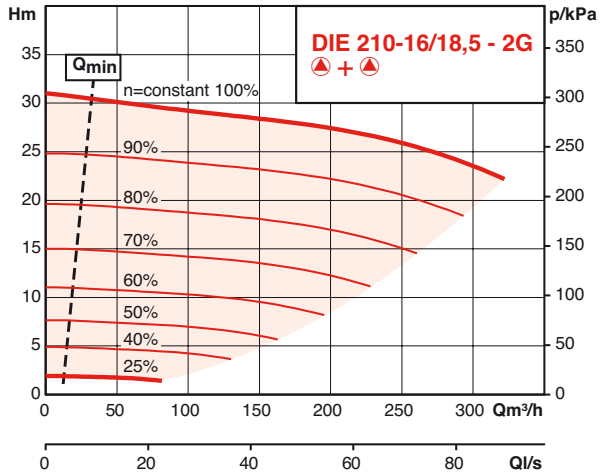

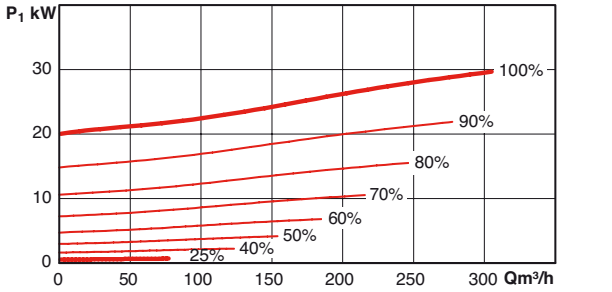

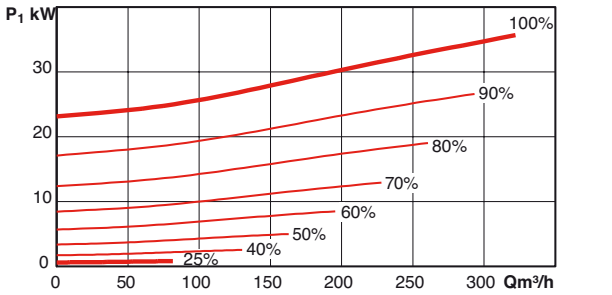

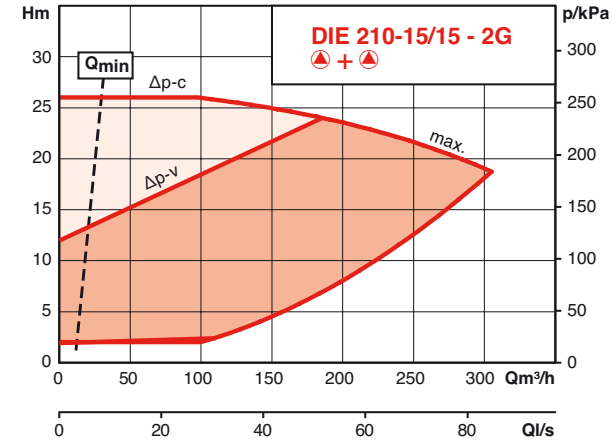

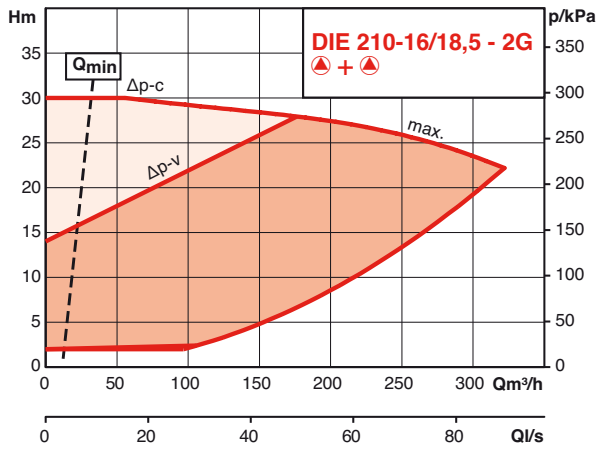

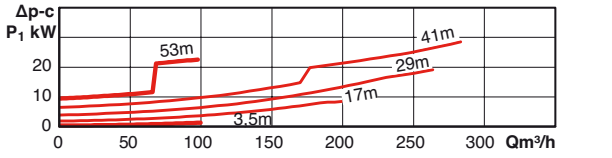

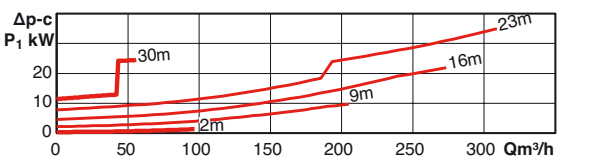

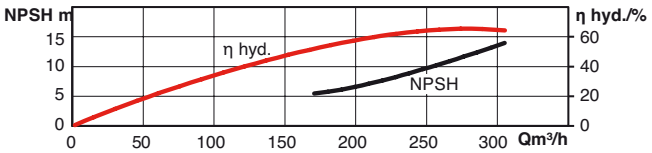

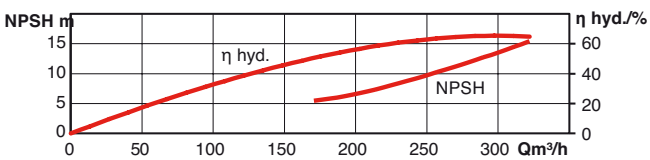

DIE

HYDRAULIC PERFORMANCES – OPERATING 2 PUMPS IN PARALLEL

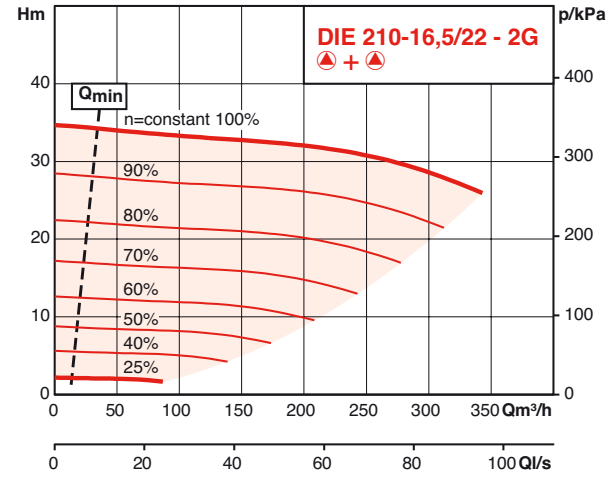

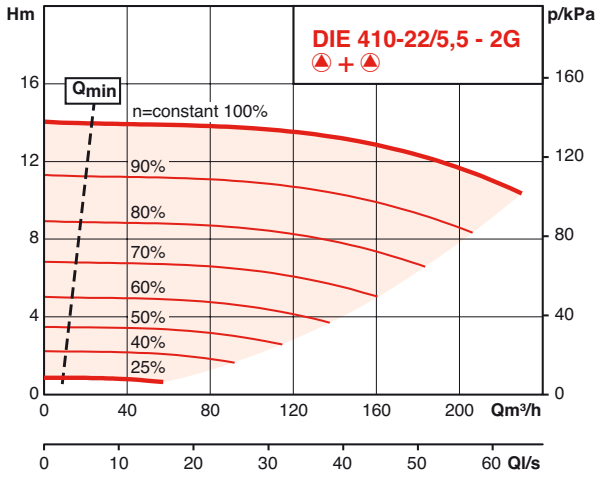

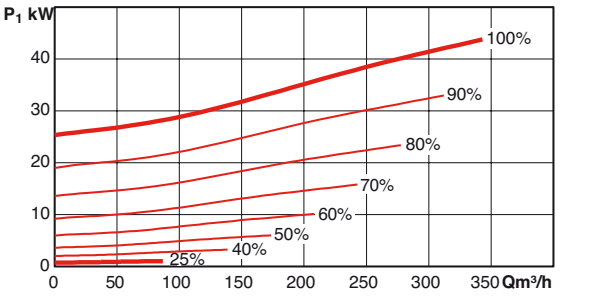

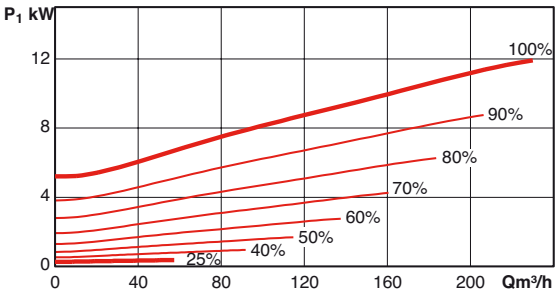

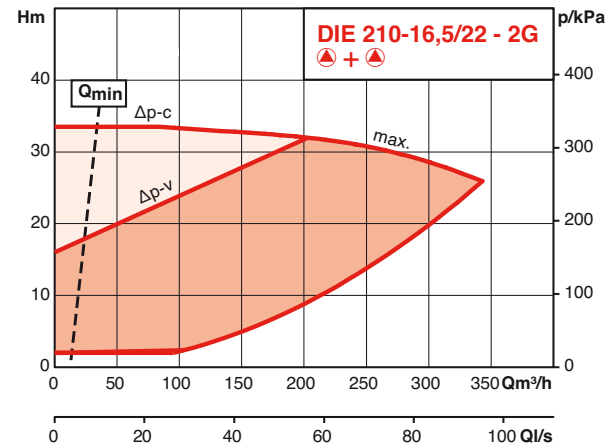

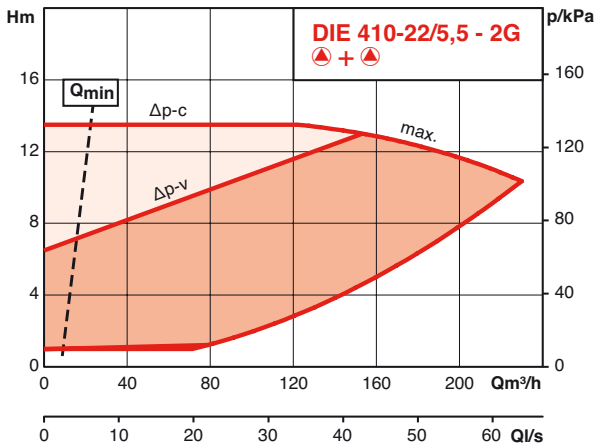

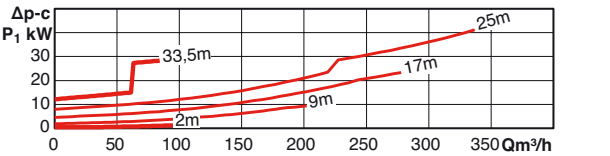

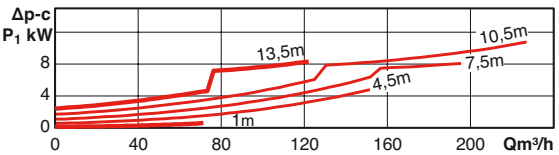

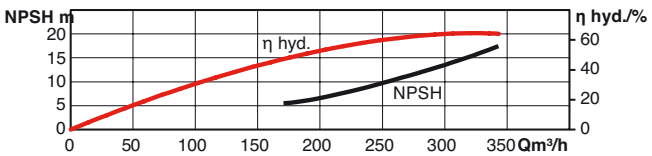

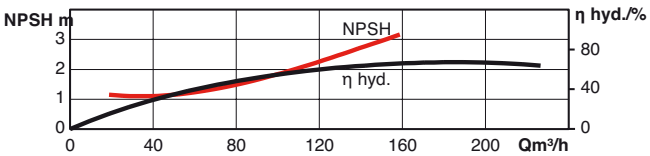

HYDRAULIC PERFORMANCES – OPERATING 2 PUMPS IN PARALLEL

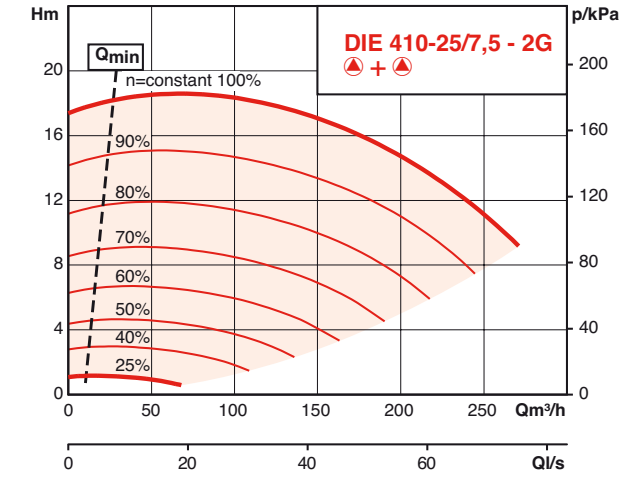

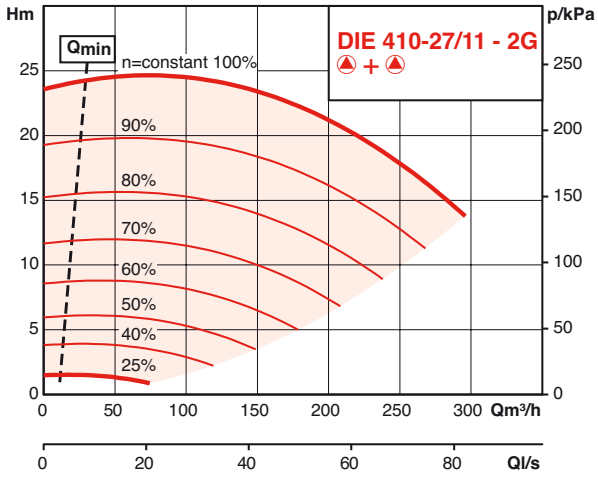

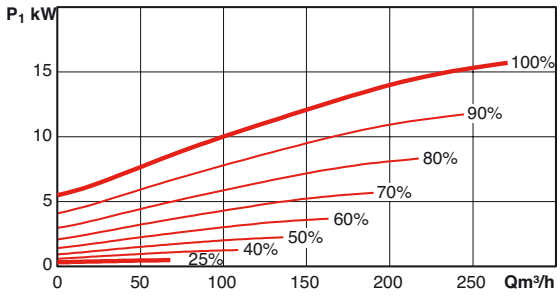

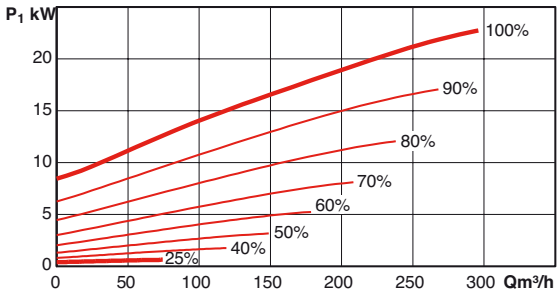

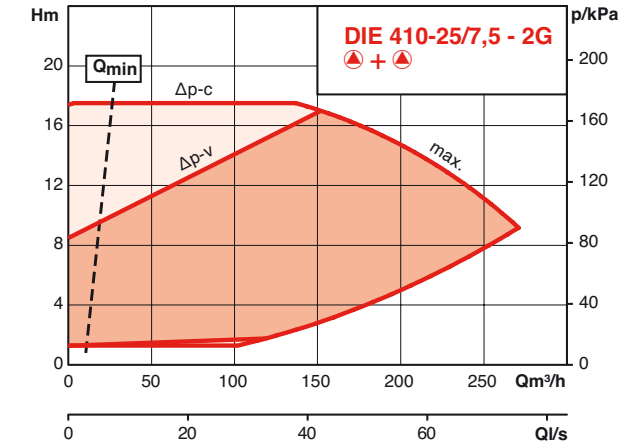

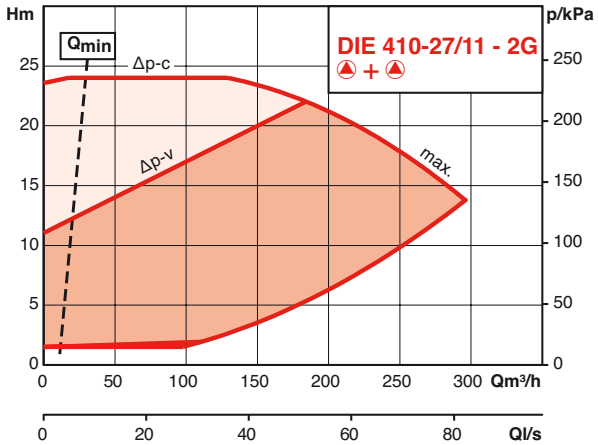

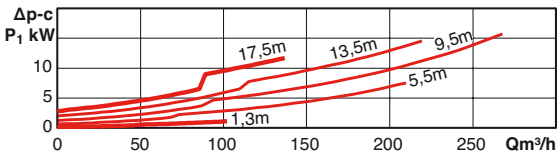

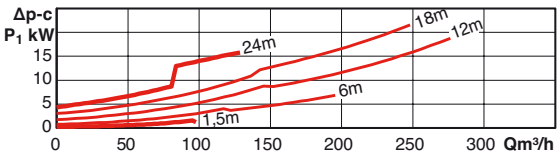

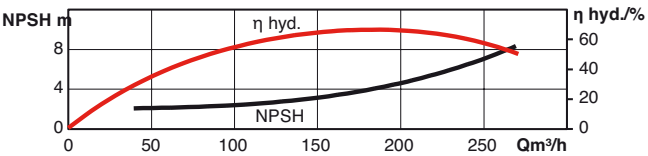

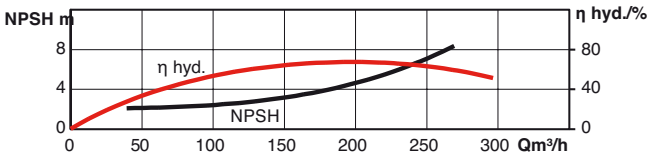

DIE

HYDRAULIC PERFORMANCES – OPERATING 2 PUMPS IN PARALLEL

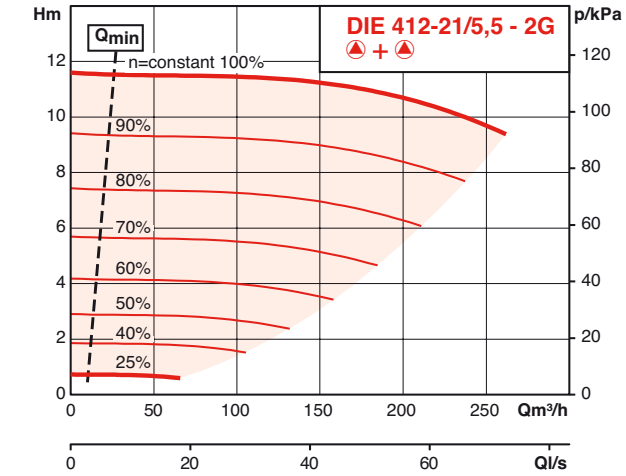

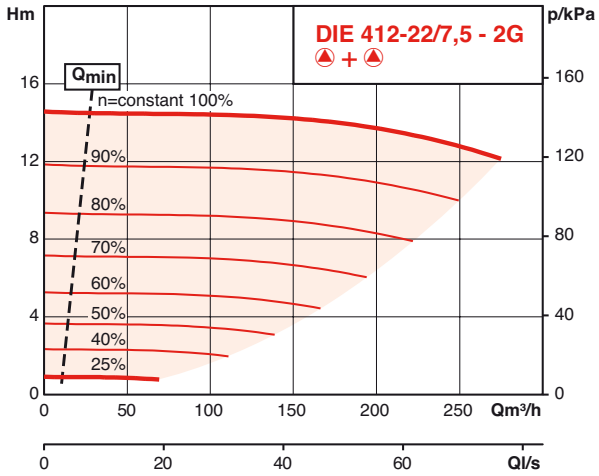

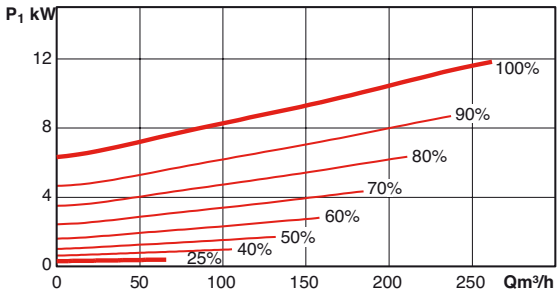

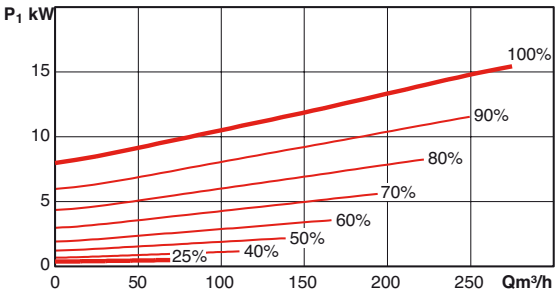

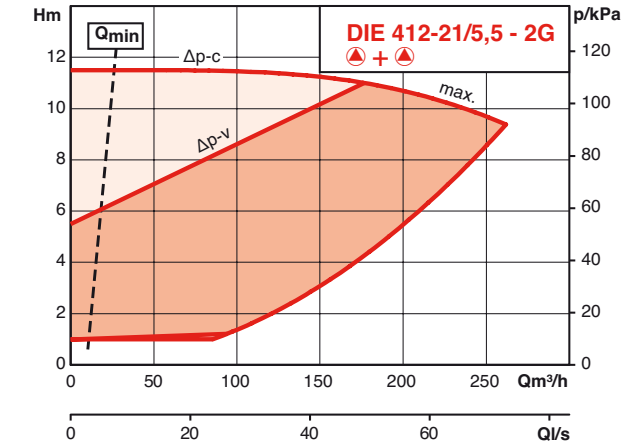

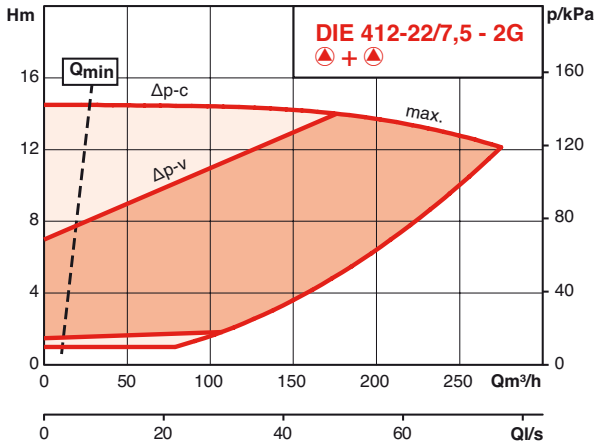

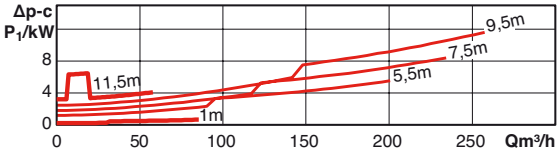

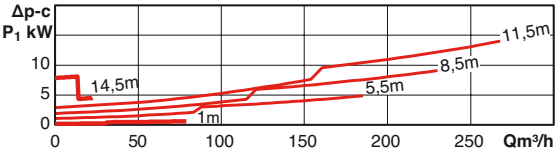

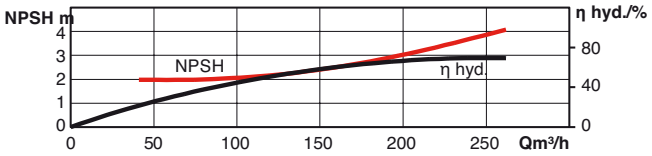

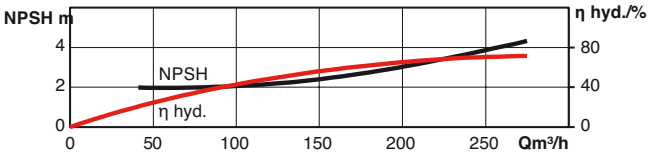

HYDRAULIC PERFORMANCES – OPERATING 2 PUMPS IN PARALLEL

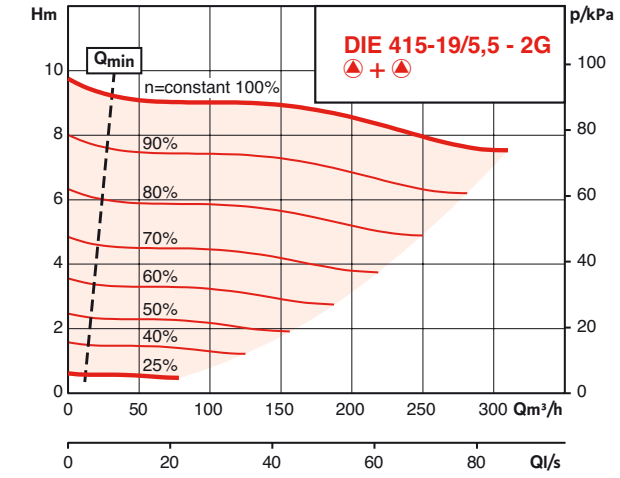

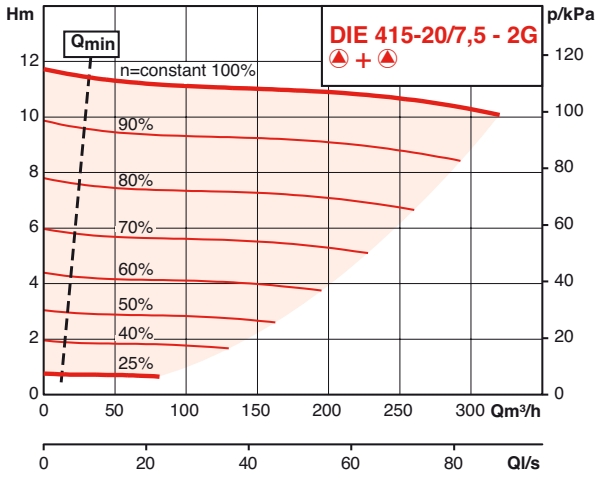

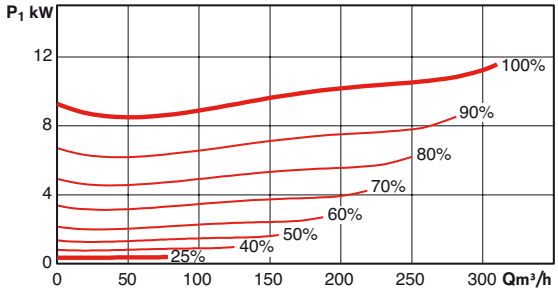

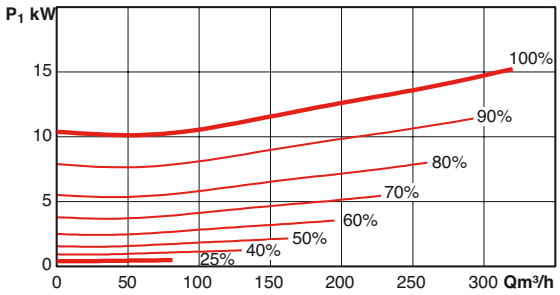

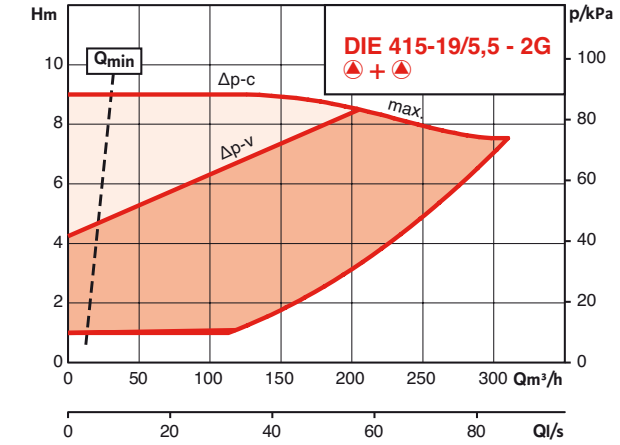

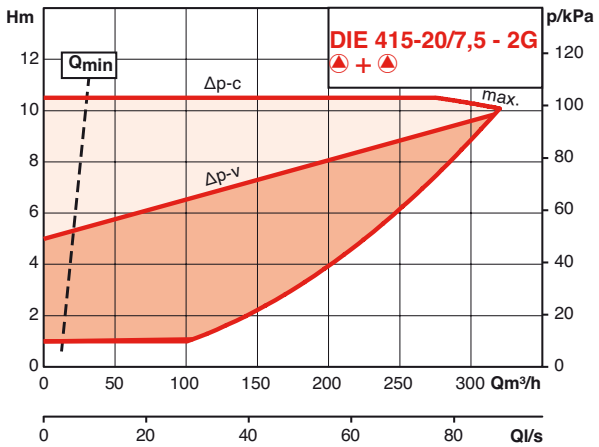

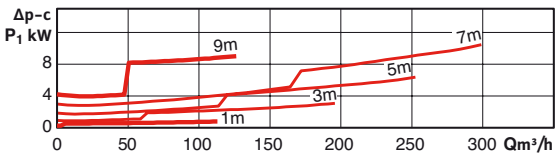

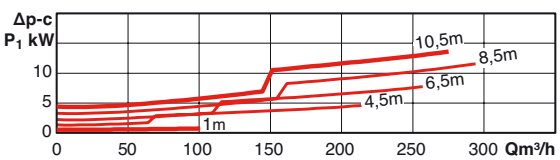

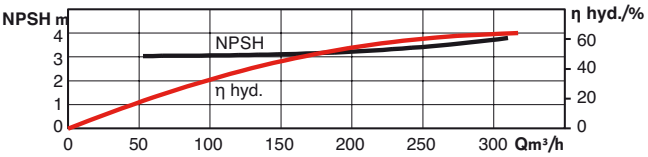

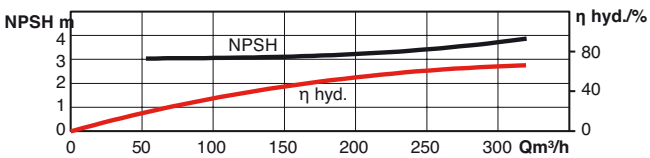

DIE

HYDRAULIC PERFORMANCES – OPERATING 2 PUMPS IN PARALLEL

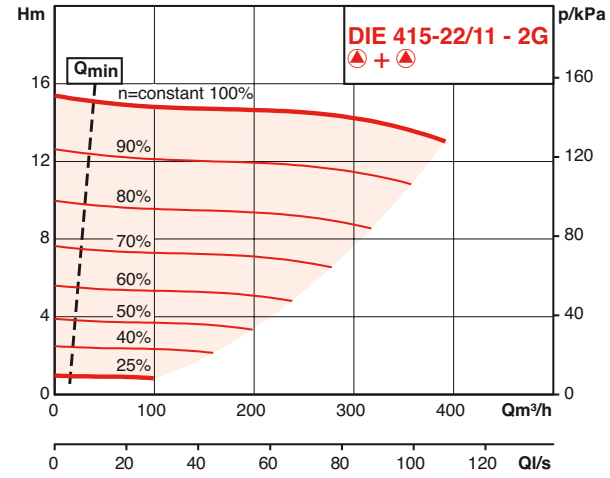

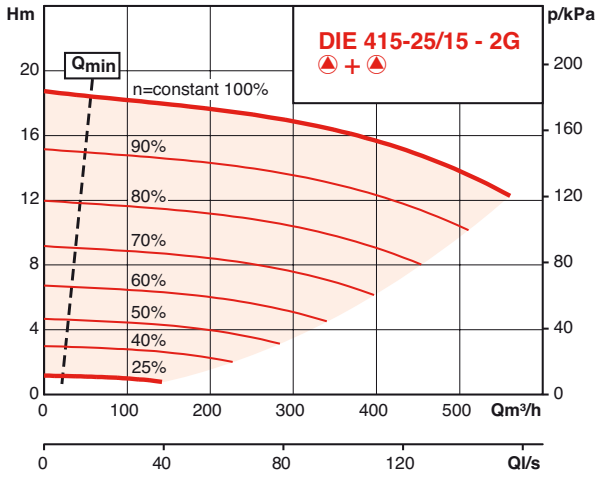

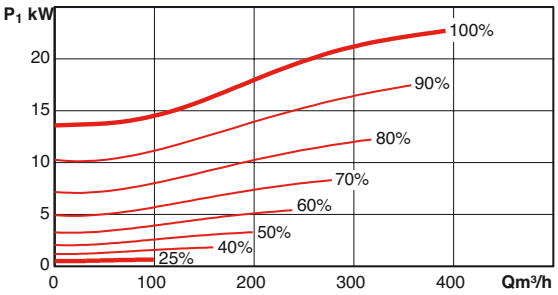

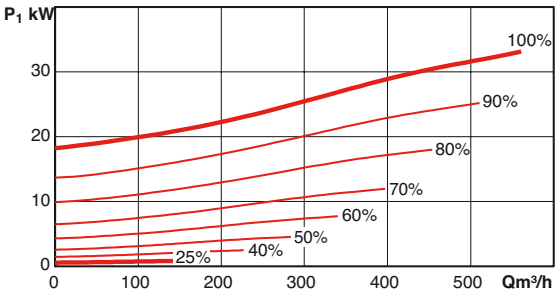

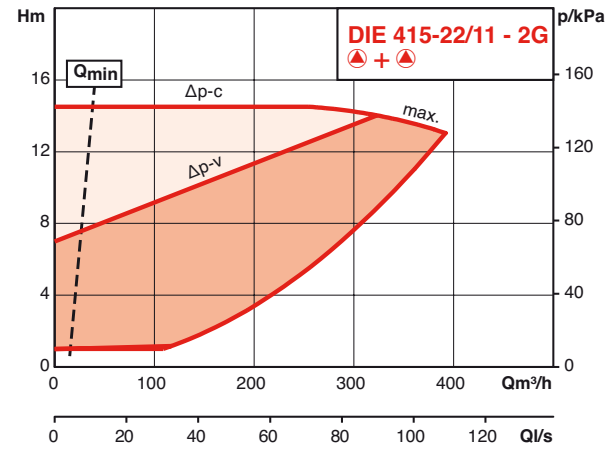

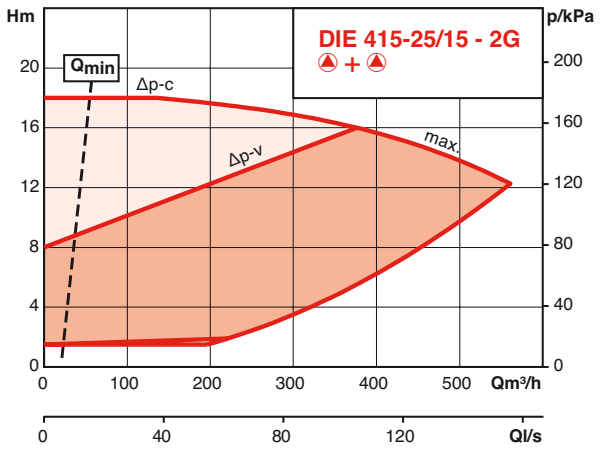

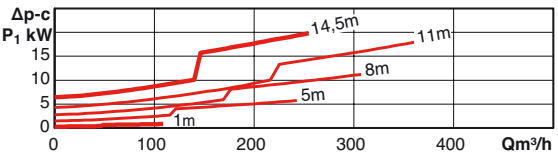

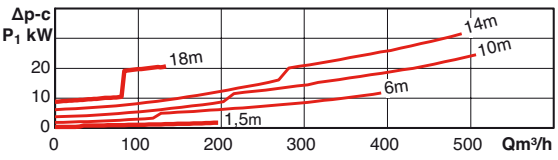

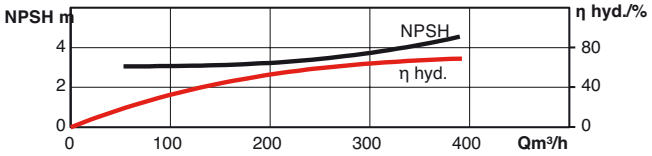

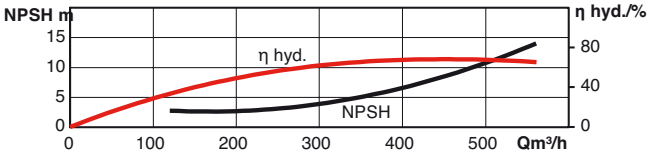

HYDRAULIC PERFORMANCES – OPERATING 2 PUMPS IN PARALLEL

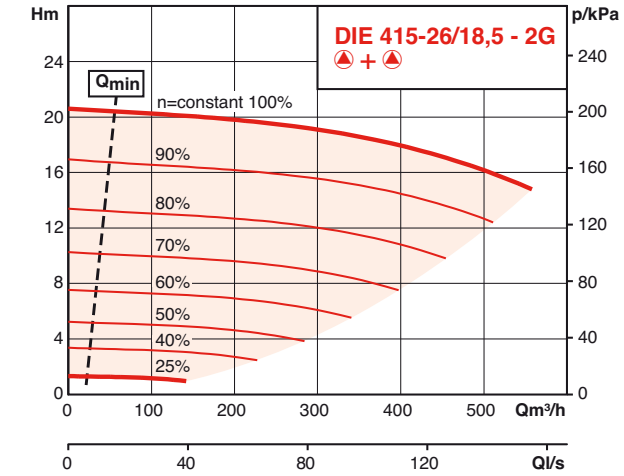

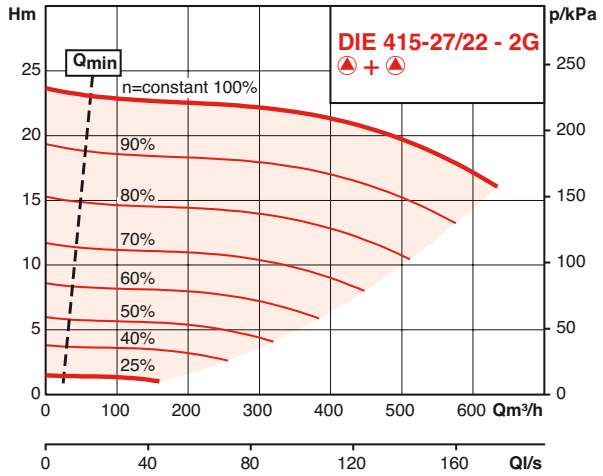

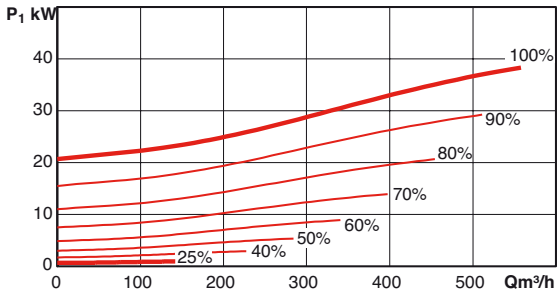

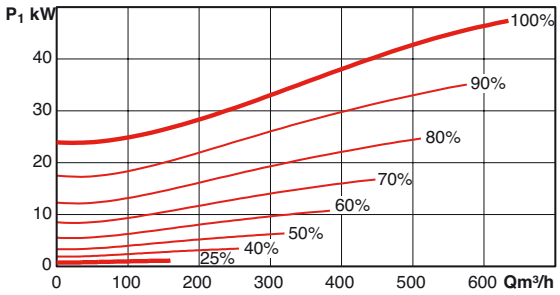

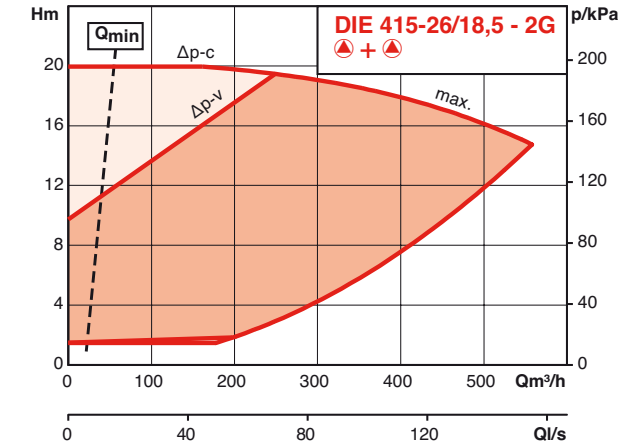

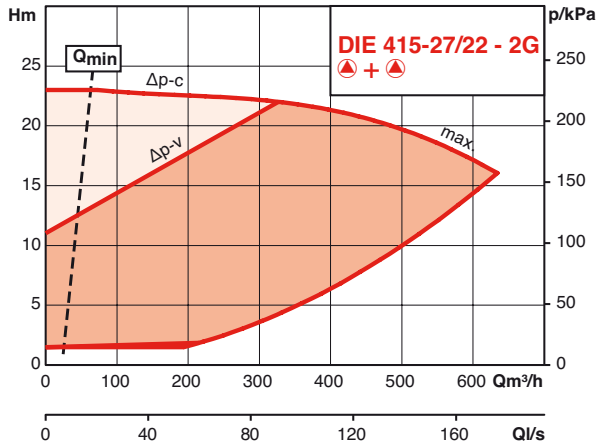

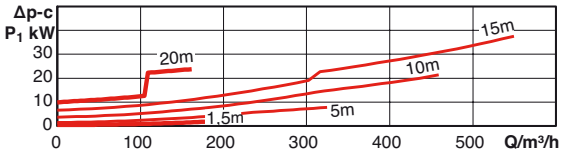

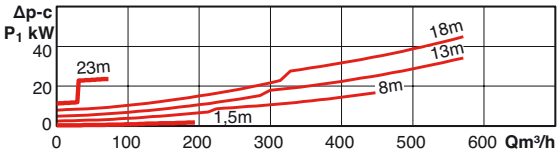

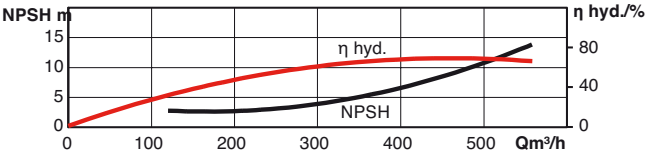

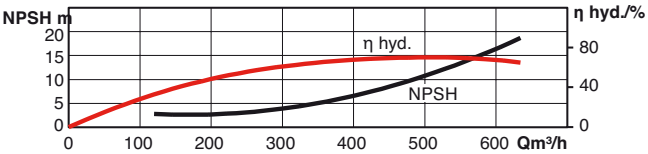

DIE

HYDRAULIC PERFORMANCES – OPERATING 2 PUMPS IN PARALLEL

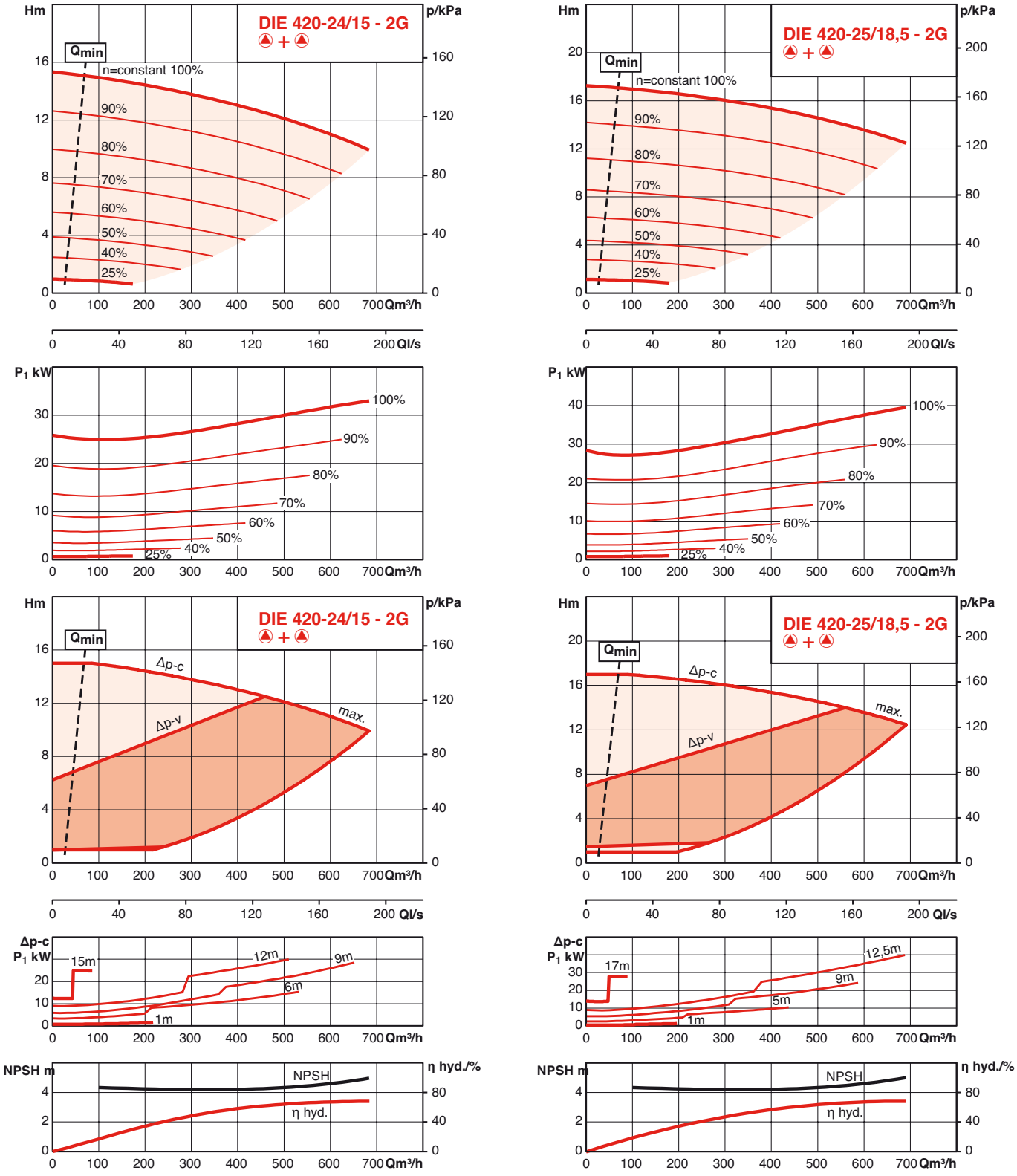

HYDRAULIC PERFORMANCES – OPERATING 2 PUMPS IN PARALLEL

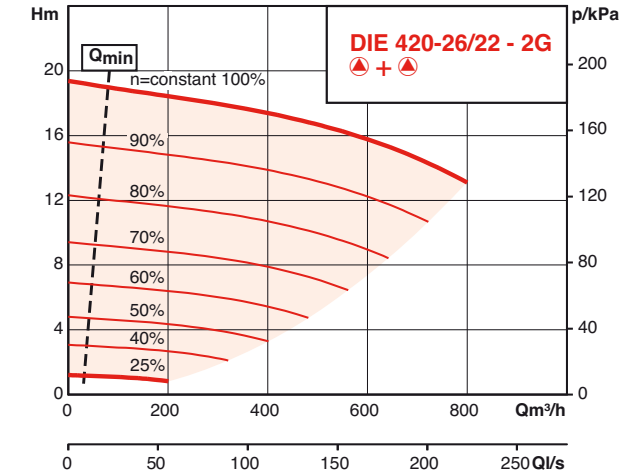

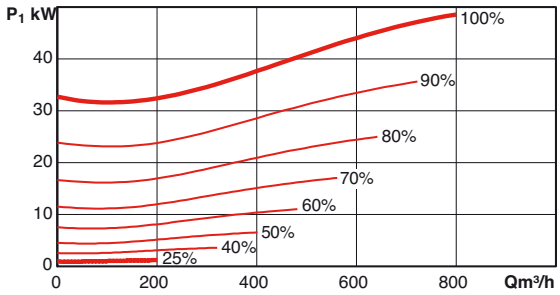

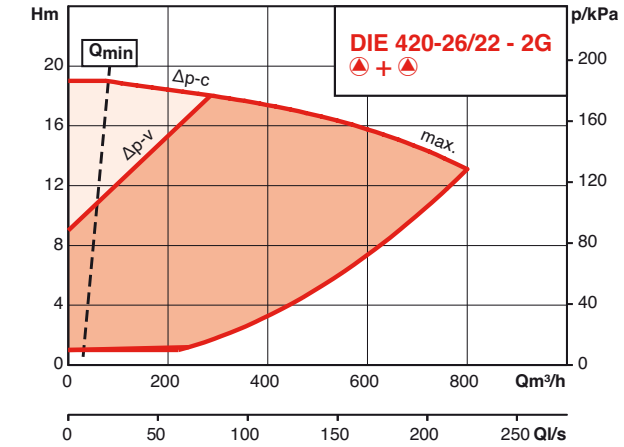

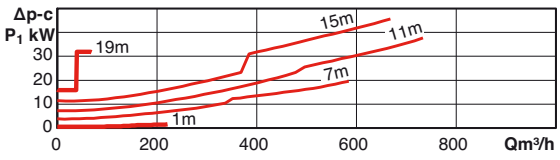

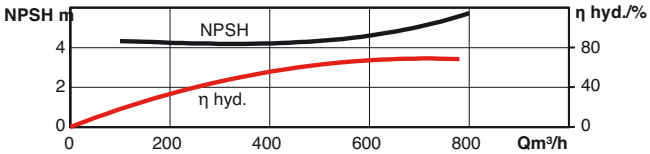

DIE

ELECTRICAL CHARACTERISTICS AND SIZES

• Dimensional diagram A

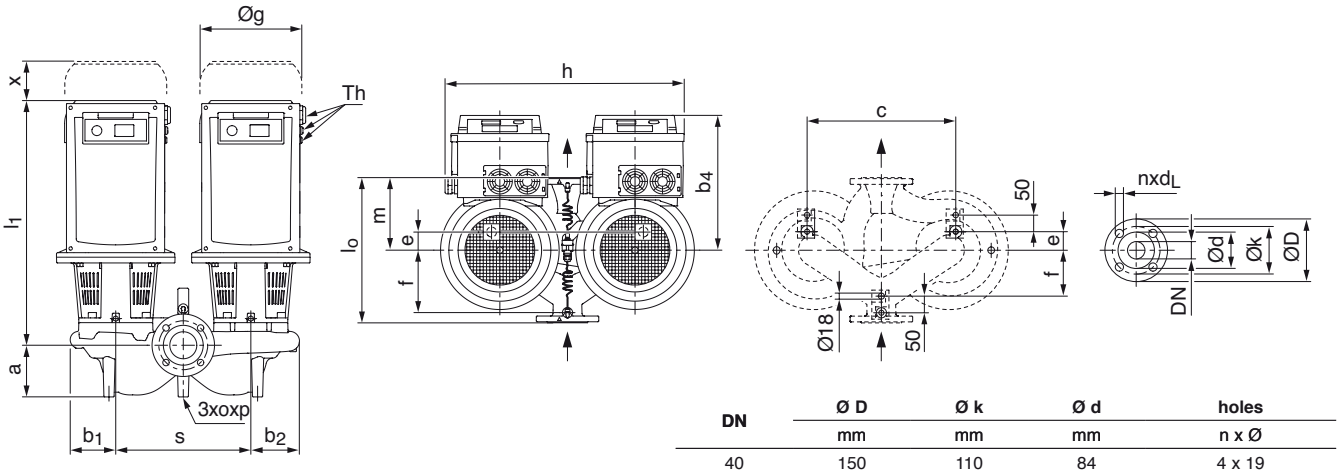

DN	Ø D	Ø k	Ø d	holes
	mm	mm	mm	n x Ø
40	150	110	84	4 x 19
50	165	125	99	4 x 19
65	185	145	118	4 x 19
80	200	160	132	8 x 19
100	220	180	156	8 x 19
125	250	210	184	8 x 19
150	285	240	211	8 x 23
200	340	295	266	12 x 23

• Dimensional diagram B

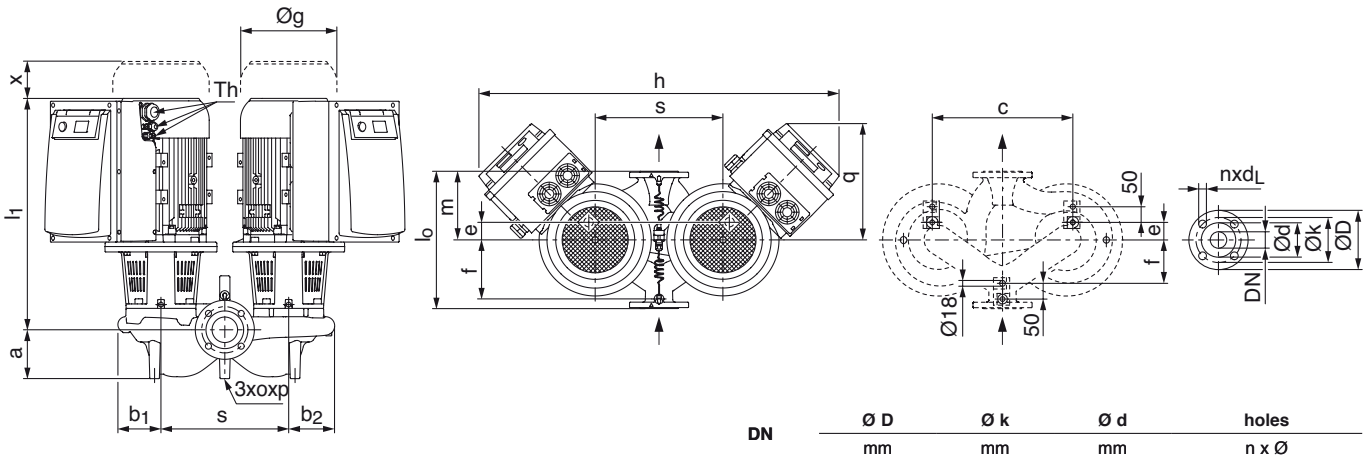

DN	Ø D	Ø k	Ø d	holes
	mm	mm	mm	n x Ø
40	150	110	84	4 x 19
50	165	125	99	4 x 19
65	185	145	118	4 x 19
80	200	160	132	8 x 19
100	220	180	156	8 x 19
125	250	210	184	8 x 19
150	285	240	211	8 x 23
200	340	295	266	12 x 23

ELECTRICAL CHARACTERISTICS AND SIZES

ORDER REFERENCE	MOTOR				PUMP																				
	Power rating of motor	Speed of rotation	Max. power absorbed.	Nominal current (appx.)	DN	L0	A	B1	B2	Q	B4	C	E	F	Ø G	H	L1	M	O	P	S	X	mass	Diagram
	P2	rpm	P1																					
	W		W	in A	mm	mm	mm	mm	mm	mm	mm	mm	mm	mm	mm	mm	mm	mm	mm	mm	mm	mm	kg	
DIE204-17/5.5-2G	5500	750 - 2900	6700	11.3	40	340	100	120	127	293	-	400	52	145	266	925	580	170	M10	20	340	95	180	B
DIE204-20/7.5-2G	7500	750 - 2900	8900	14.4	40	440	110	145	147	-	303	500	38	192	266	621	593	220	M10	20	400	100	211	A
DIE204-22/11-2G	11000	750 - 2900	13000	20.9	40	440	110	145	147	-	427	500	38	192	302	720	716	220	M10	20	400	100	337	A
DIE205-16/5.5-2G	5500	750 - 2900	6600	11.1	50	340	120	126	136	293	-	360	50	130	266	925	577	180	M10	20	340	100	184	B
DIE205-17/7.5-2G	7500	750 - 2900	8900	14.4	50	340	120	126	136	293	-	360	50	130	266	925	577	180	M10	20	340	100	192	B
DIE205-18/7.5-2G	7500	750 - 2900	8900	14.2	50	440	120	145	148	-	303	500	50	200	266	621	599	220	M10	20	400	100	189	A
DIE205-21/11-2G	11000	750 - 2900	13000	20.8	50	440	120	145	148	-	427	500	50	200	302	720	722	220	M10	20	400	100	342	A
DIE205-22/15-2G	15000	750 - 2900	19000	27.5	50	440	120	145	148	-	427	500	50	200	302	720	722	220	M10	20	400	100	357	A
DIE206-15/5.5-2G	5500	750 - 2900	6600	10.5	65	430	153	134	144	293	-	440	55	185	266	985	595	215	M12	20	400	120	202	B
DIE206-16/7.5-2G	7500	750 - 2900	8900	14.4	65	430	153	134	144	293	-	440	55	185	266	985	595	215	M12	20	400	120	210	B
DIE206-17/11-2G	11000	750 - 2900	13100	20.2	65	430	153	134	144	416	-	440	55	185	302	1232	727	215	M12	20	400	120	326	B
DIE206-20/15-2G	15000	750 - 2900	18900	28.5	65	475	140	157	166	-	427	520	45	210	302	720	732	245	M12	20	400	110	369	A
DIE206-21/18.5-2G	18500	750 - 2900	21500	33.8	65	475	140	157	166	-	427	520	45	210	302	720	732	245	M12	20	400	110	386	A
DIE206-22/22-2G	22000	750 - 2900	26000	41	65	475	140	157	166	-	427	520	45	210	302	720	732	245	M12	20	400	110	420	A
DIE208-13/5.5-2G	5500	750 - 2900	6600	10.9	80	400	155	134	146	293	-	400	62	178	266	935	601	200	M12	20	350	120	197	B
DIE208-14/7.5-2G	7500	750 - 2900	8900	14.5	80	400	155	134	146	293	-	400	62	178	266	935	601	200	M12	20	350	120	205	B
DIE208-15/7.5-2G	7500	750 - 2900	8700	14	80	440	155	144	160	293	-	440	62	188	266	985	600	220	M12	20	400	120	222	B
DIE208-16/11-2G	11000	750 - 2900	13000	21	80	440	155	144	160	416	-	440	62	188	302	1232	732	220	M12	20	400	120	335	B
DIE208-17/15-2G	15000	750 - 2900	18100	28.1	80	440	155	144	160	416	-	440	62	188	302	1232	732	220	M12	20	400	120	349	B
DIE208-19/18.5-2G	18500	750 - 2900	21500	34.4	80	500	145	166	176	-	427	550	72	228	302	770	736	250	M12	20	450	120	401	A
DIE208-20/22-2G	22000	750 - 2900	25700	38.8	80	500	145	166	176	-	427	550	72	228	302	770	736	250	M12	20	450	120	441	A
DIE210-14.5/11-2G	11000	750 - 2900	13000	21	100	500	180	173	188	416	-	580	80	250	302	1272	745	226	M12	20	440	135	378	B
DIE210-15/15-2G	15000	750 - 2900	18000	28	100	500	180	173	188	416	-	580	80	250	302	1272	745	226	M12	20	440	135	392	B
DIE210-16/18.5-2G	18500	750 - 2900	21700	34	100	500	180	173	188	416	-	580	80	250	302	1272	745	226	M12	20	440	135	409	B
DIE210-16.5/22-2G	22000	750 - 2900	25900	40.4	100	500	180	173	188	416	-	580	80	250	302	1272	745	226	M12	20	440	135	442	B
DIE410-22/5.5-2G	5500	380 - 1450	6700	10.9	100	550	155	183	197	-	303	560	79	251	266	671	622	275	M12	20	450	120	273	A
DIE410-25/7.5-2G	7500	380 - 1450	8700	13.9	100	550	180	198	210	-	303	600	54	266	266	701	626	260	M12	20	480	120	315	A
DIE410-27/11-2G	11000	380 - 1450	12900	20.7	100	550	180	198	210	-	427	600	54	266	302	800	749	260	M12	20	480	120	367	A
DIE412-21/5.5-2G	5500	380 - 1450	6500	10.8	125	620	175	189	205	-	303	640	68	283	266	721	640	312	M16	25	500	120	294	A
DIE412-22/7.5-2G	7500	380 - 1450	8800	14.1	125	620	175	189	205	-	303	640	68	283	266	721	640	312	M16	25	500	120	308	A
DIE415-19/5.5-2G	5500	380 - 1450	6600	11	150	700	210	215	241	-	303	640	91	309	266	771	644	365	M16	25	550	130	370	A
DIE415-20/7.5-2G	7500	380 - 1450	8600	13.8	150	700	210	215	241	-	303	640	91	309	266	771	644	365	M16	25	550	130	384	A
DIE415-22/11-2G	11000	380 - 1450	12900	21	150	700	210	215	241	-	427	640	91	309	302	870	767	365	M16	25	550	130	504	A
DIE415-25/15-2G	15000	380 - 1450	17600	26.8	150	700	230	293	310	-	427	696	116	344	302	920	793	330	M16	25	600	135	617	A
DIE415-26/18.5-2G	18500	380 - 1450	20900	32.6	150	700	230	293	310	-	475	696	116	344	370	920	846	330	M16	25	600	135	671	A
DIE415-27/22-2G	22000	380 - 1450	25300	38.3	150	700	230	293	310	-	475	696	116	344	370	920	846	330	M16	25	600	135	699	A
DIE420-24/15-2G	15000	380 - 1450	17400	27	200	800	250	322	347	-	427	1000	62	400	302	1020	818	370	M16	25	700	140	765	A
DIE420-25/18.5-2G	18500	380 - 1450	20800	32.8	200	800	250	322	347	-	475	1000	62	400	370	1020	871	370	M16	25	700	140	808	A
DIE420-26/22-2G	22000	380 - 1450	25300	39.2	200	800	250	322	347	-	475	1000	62	400	370	1020	871	370	M16	25	700	140	836	A

DIE

NOTES

OPERATING RANGES

Flow rates of up to :	**120 m³/h**
Manometric head of up :	**51 m**
Max. operating pressure :	
	16 bar up to +120°C
	13 bar up to +140°C
Temperature range:	**–20° to +140°C**
Max. ambient temperature:	**–10° to +40°C**
DN (nominal diameter) of ports:	**40 to 100**
Reference MEI*:	**≥ 0,70**

*Minimum Efficiency Index

IXENS

HIGH EFFICIENCY, VARIABLE-SPEED IN-LINE PUMPS

Heating and air conditioning 50 Hz

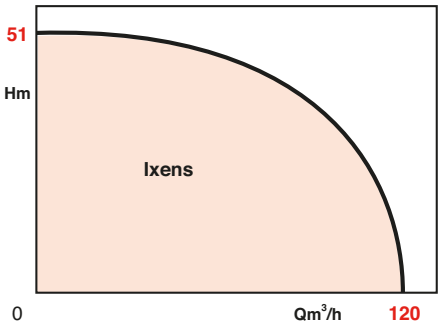

ADVANTAGES

·ENERGY SAVINGS
- High-output synchronous motor with permanent magnets > IE4 (according to IEC 60034-31 Ed.2).
- Average energy savings of up to 43% compared to variable-speed asynchronous motors.
- New hydraulic system optimally adapted to permanent-magnet motor technology.
- Different types of regulation: Δp-c, Δp-v, PID and n-const.

·EASE OF MANAGEMENT
- Identical command, control and communication interfaces to SIE DIE LRE JRE pumps:
·a single button for choosing functions and settings,
·parameters always visible on the LCD screen,
·optional interfaces for bus communication via plug-in IF modules.

·COMPACT PRODUCT
- Extremely compact design.
- Reduced weight.

.../...

APPLICATIONS

Pumps designed for the circulation of abrasive residue-free hot or cold water within heating, cold water and iced water systems, and also within irrigation, industrial circulation and heat transport systems.
If additives are used, such as glycol or oil, check whether the appropriate seals and gaskets are fitted and whether the flow rate needs to be adjusted (for the addition of glycol starting at 10% vol.).

·Permissible liquids for pumping :
- Heating water according to VDI 2035
- Cooling and cold water
- Water/glycol mixtures [1]
- Thermal fluids and other fluids [2]

1) For 20 - 40% by vol. of glycol and liquid temperature of ≤ 40° C
2) Special model at extra cost

GLOBAL EFFICIENCY BY SALMSON®



IXENS

ADVANTAGES

- **RELIABILITY**
- **Fully automatic operation: no servicing nor bleeding of the sensor required.**
- **Electronic module equipped with a non-volatile memory for data storage and protection of setpoints in the event of a power cut.**
- **IP 55 protection class.**
- **Integrated motor protection.**
- **Condensate drainage fitted as standard.**
- **High-quality anti-corrosion protection featuring a cataphoretic coating.**

IDENTIFICATION

IXENS 40 - 42/4,5 - R1

- Pump code
- Ø nominal flange (DN)
- Nominal manometric head in m
- Power rating of P2 motor in kW
- Version without pressure sensor

ACCESSORIES

- Consoles for mounting on baseplate.
- R1 version only – differential pressure sensors (DPS).
- Additional plug-in IF module for electronically regulated pumps in the IXENS series (a single module is required), allowing for the following functions: communication bus interface (ModBUS, LON, BACnet S/TP, CAN, PLR digital interface) for connection to a home automation system.



DESIGN

High-efficiency pump of an in-line design, with intake and discharge flanges of the same nominal diameter and a ventilated, electronic switching variable-speed, permanent-magnet motor. Single-stage, low-pressure centrifugal pump with flanged connector and mechanical seal.

EQUIPMENT / FUNCTIONS

Operating modes	
Δp-c for constant differential pressure	•
Δp-v for variable differential pressure	•
PDI mode - Proportional-Differential-Integral regulation	•
Setting mode (n = constant)	•
Manual control	
Single button and LCD screen	•
Manual functions	
Differential pressure setpoint setting	•
Rotation speed setting (setting mode)	•
Operating mode setting	•
Pump on/off setting	•
Configuration of all operating parameters	•
Fault clearance	•
External control functions	
«Priority Off» control input	•
"External pump changeover" control input (only active in double pump mode)	•
«Analog In 0 ... 20 mA» control input (remote speed modification)	•
«Analog In 0 ... 10 V» control input (remote speed modification)	•
0–10 V analog input for the actual value signal of the pressure sensor	•
2–10 V, 0-20 mA and 4–20 mA analog input for the actual value signal of the pressure sensor	•
Signalling and display	
Collective fault message (dry, closed contact)	•
Collective run message	•
Data exchange	
Location for Salmson IF modules (Modbus, BACnet, CAN, PLR, LON) for connection to centralised technical management system	•
Safety functions	
Full motor protection with integrated electronic tripping device	•
Access locking	•
Double pump control (2 single pumps)	
Main/backup operating mode with automatic changeover in the event of a fault	•
Main/backup operating mode with changeover of pumps after 24 hours	•
Parallel operation	•
Parallel operation with optimisation of efficiency according to needs	•

• = supplied

MAIN COMPONENTS

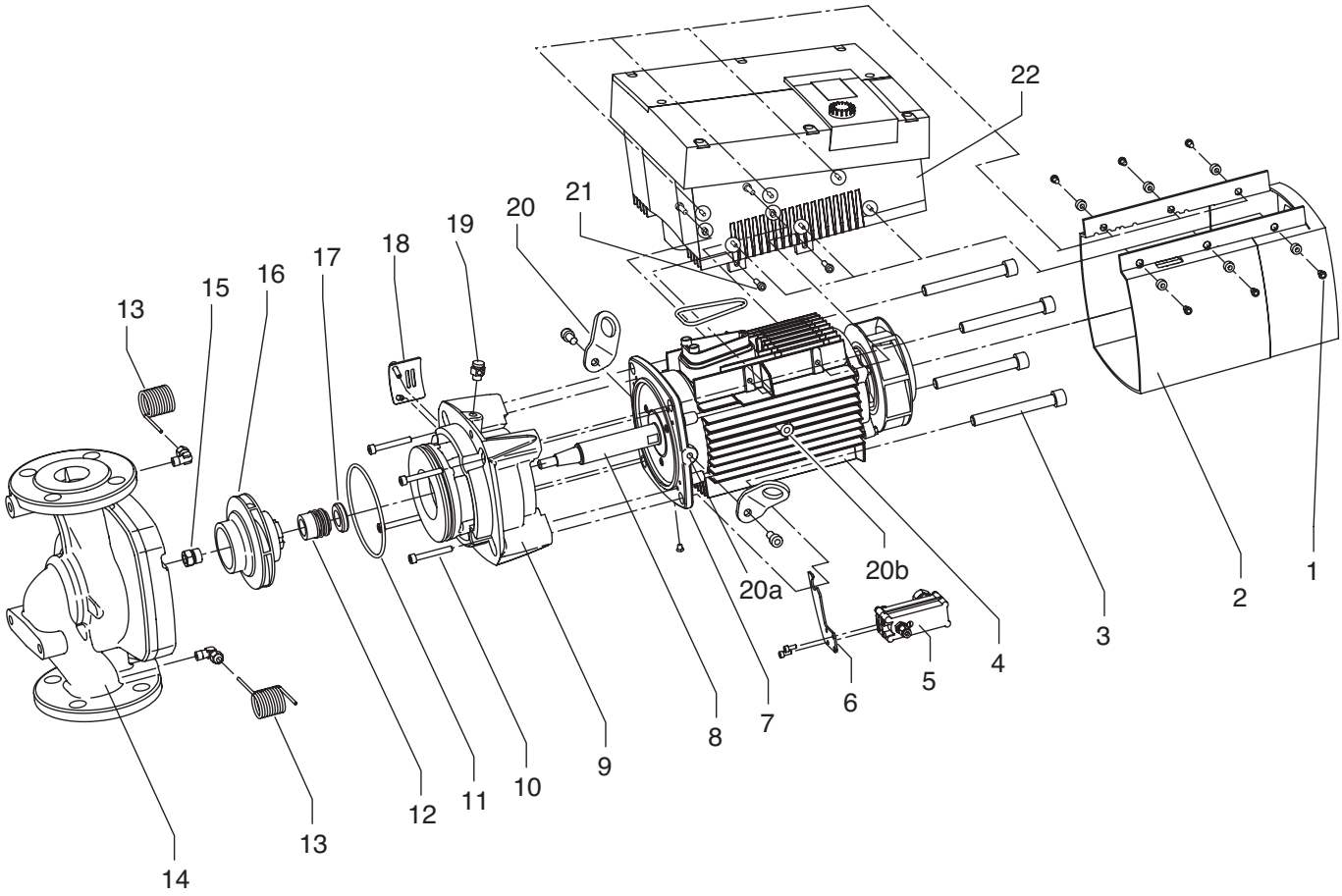

1. Fan cover fixing screw
2. Fan cover
3. Motor fixing screw
4. Motor case
5. Differential pressure sensor
6. Differential pressure sensor bracket
7. Motor flange
8. Motor shaft
9. Lantern ring
10. Lantern ring fixing screw
11. O-ring
12. Rotating ring of the mechanical seal
13. Capillary tube for pressure measurement
14. Pump housing
15. Impeller nut
16. Impeller
17. Mechanical seal throat bushing
18. Guard
19. Bleeder
20. Transport lug

20a. Attachment points for transport lugs on the motor flange

20b. Attachment points for transport lugs on the motor case

21. Fixing screw for the electronic module
22. Electronic module

IXENS

TECHNICAL SPECIFICATIONS

Permissible fluids (other fluids on request)	
Heating water (according to VDI 2035)	•
Water-glycol mixtures (for 20-40% glycol by volume and fluid temperature at ≤ 40°C)	•
Cold water and cooling water	•
Thermal fluid	Special operation at extra cost
Permissible field of application	
Standard operation for working pressure	Pmax : 16 bar (up to +120 °C) bar Pmax : 13 bar (up to +140 °C) bar
Special operation for working pressure	Pmax : -
Temperature range for climatic engineering at max. ambient temperature. +40 °C	-20...+140 °C
Max. ambient temperature	40 °C
Installation in plant room	•
Installation outside	-
Pipe connections	
Nominal diameters (DN) of connector	40-65
Flanges (according to EN 1092-2)	PN16
Flange with pressure measurement connections	R1/8
Materials	
Pump housing	EN-GJL-250
Lantern ring	EN-GJL-250
Impeller	PPS-GF40
Impeller (special operation)	-
Pump shaft	1.4122
Mechanical seal	AQ1EGG
Other mechanical seals	On request
Electrical connection	
Mains supply	3~440 V, 50/60 Hz 3~400 V, 50/60 Hz 3~380 V, 50/60 Hz
Speed range	500-5,200 rpm
Motor/electronic	
Motor technology	EC motor
Integrated motor protection	•
Protection class	IP55
Insulation class	F
Sound pressure (1)	74 dB(A)
Interference emitted	EN 61800-3
Resistance to static interference	EN 61800-3
Integrated motor protection	•
Mounting options	
Mounting on horizontal or vertical pipework (motor power ≤ 15 kW). Mounting in a downward position is prohibited. Allow room for dismantling the motor, lantern ring and impeller.	•
Mounting on console, see accessories	•

• = supplied, - = not supplied

(1) Mean value of the sound pressure level at a distance of 1 m from the pump, pursuant to the DIN EN ISO 3744 standard

CONNECTION DIAGRAM

Control terminals

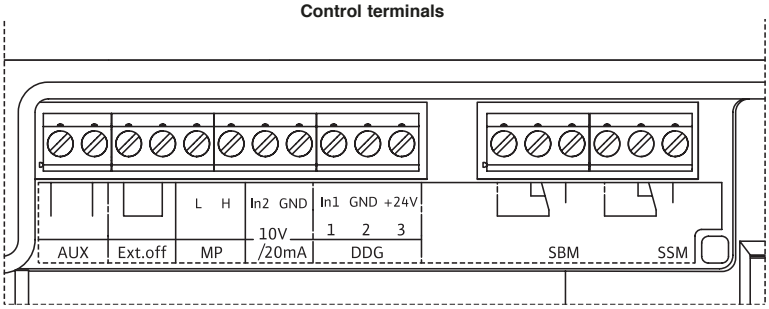

Power terminals
(network connection terminals)

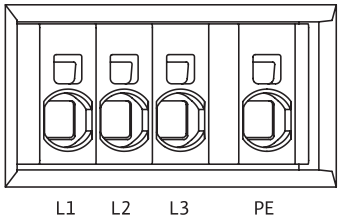

ASSIGNMENT OF CONNECTION TERMINALS

Désignation	Affectation	Remarques
L1, L2, L3	Network power voltage	Three-phase current 3~400 V AC, 50 Hz, CEI 38
PE	Protective conductor terminal	
In1 (1) (input)	Actual input value	Type of signal: voltage (0-10 V, 2-10 V) Input resistance: Ri ≥ 10 kΩ Type of signal: voltage (0-20 mA, 4-20 mA) Input resistance: Ri = 500 Ω
In2 (Input)	Input setpoint value	For all operating modes, In2 may be used as the input for the remote modification of the setpoint value. Type of signal: voltage (0-10 V, 2-10 V) Input resistance: Ri ≥ 10 kΩ Type of signal: voltage (0-20 mA, 4-20 mA) Input resistance: Ri = 500 Ω
GND (2)	Ground connectors	For inputs In1 and In2 respectively
+ 24 V (3) (output)	Direct voltage for external sensor / consumer	Max. load. 60 mA. The voltage is protected against short circuits
AUX	External changeover of pumps	A pump changeover can be carried out via an external dry contact. The external changeover of the pumps, if activated, is carried out by bridging the two terminals once. This operation can be repeated by bridging the terminals again, in compliance with the minimum operating period. Contact load: 24 V CC/10 mA
MP	Multi-pump	Interface for the double pump function
Ext. off	«Priority Off» control input for an external dry contact switch	The pump can be activated and deactivated via an external dry contact. For installations with a high number of start-ups (> 20 activations/ deactivations per day), allow for activation/ deactivation via «ext. off». Contact load: 24 V CC/10 mA
SBM	Individual/collective run signal, standby signal and «Power on» signal Contact load:	Dry contact individual/collective run signal (inverter). The standby signal is available at the SBM terminals minimum permissible: 12 V CC, 10 mA, maximum permissible: 250 V CA, 1 A
SSM	Individual/collective fault signal Contact load:	A dry contact individual/collective run signal (inverter) is available at the SSM terminals minimum permissible: 12 V CC, 10 mA, maximum permissible: 250 V CA, 1 A
Interface IF module	Connection terminals for the standard GA digital interface, (PLR)	The optional IF module is plugged into a multi-plug in the terminal box. The plug is equipped with a foolproofing device.

IXENS

DISPLAY LAYOUT

Information is shown on the display according to the diagram below:

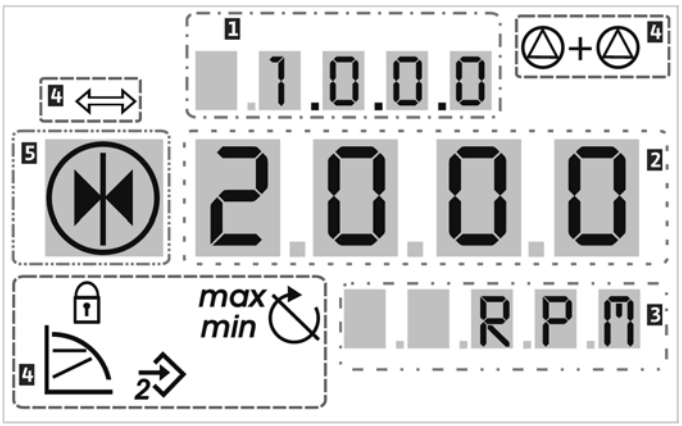

Rep.	Description
1	Menu number
2	Value display
3	Unit display
4	Standard symbols
5	Symbol display

EXPLANATION OF STANDARD SYMBOLS

Symbol	Description	Symbol	Description
	Regulation of constant speed	min	Min. mode
	Δp-c constant regulation	max	Max. mode
	Δp-v variable regulation		Pump operating
%	PID Control		Pump stopped
2	In2 input (external setpoint value) activated		Pump operating, in emergency mode
	Access locking		Pump stopped, in emergency mode
	BMS (Building Management System) is active		DP/MP operating mode: main / backup
	DP/MP operating mode: parallel		-

GENERAL PRE-SELECTION DIAGRAM - 4 POLES - 50HZ

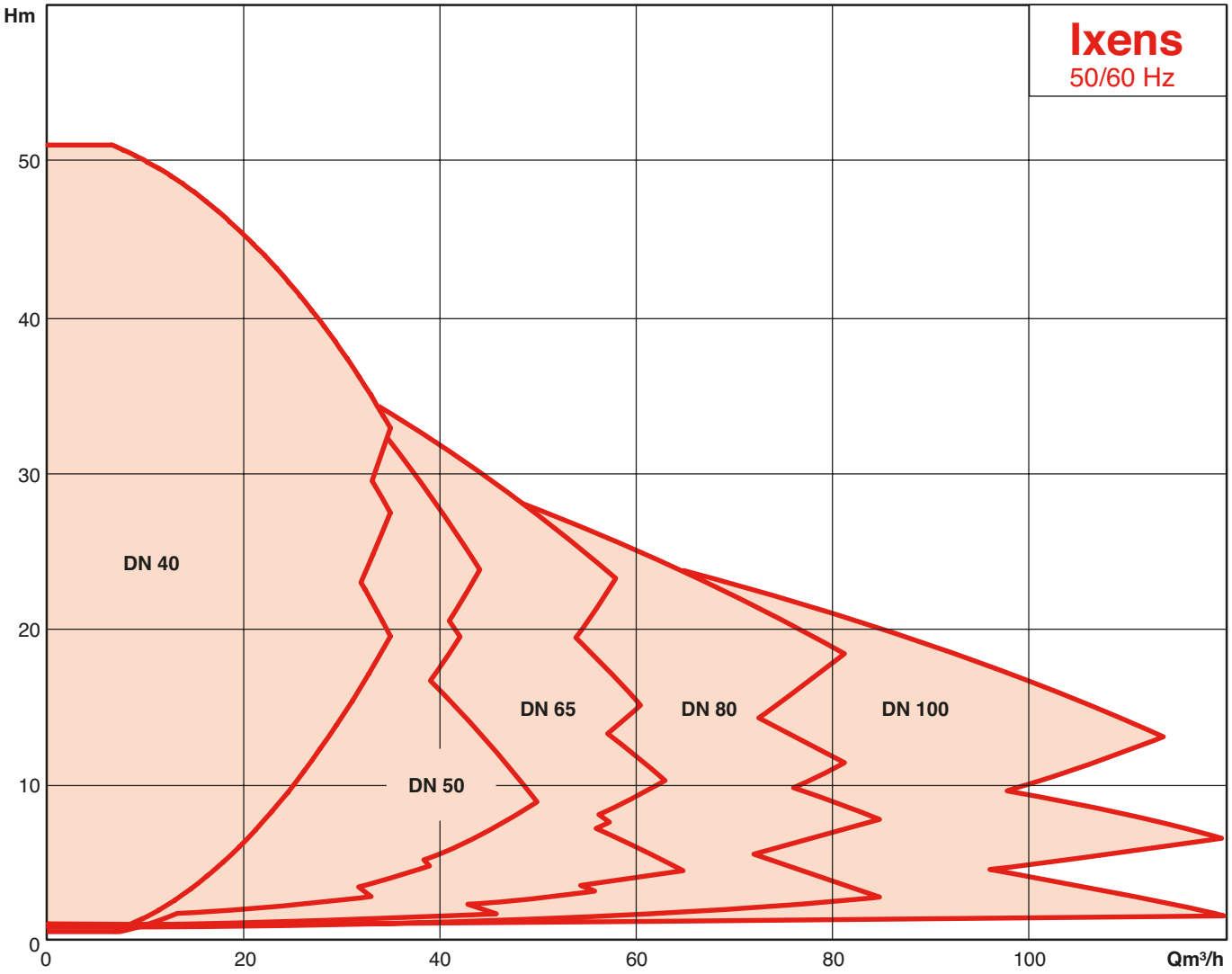

IXENS

HYDRAULIC PERFORMANCE

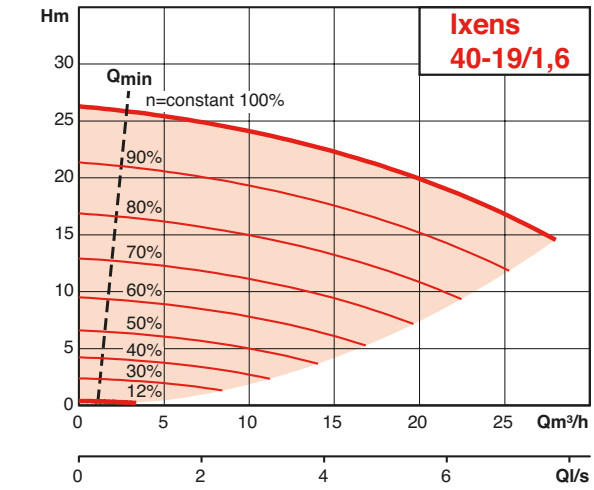

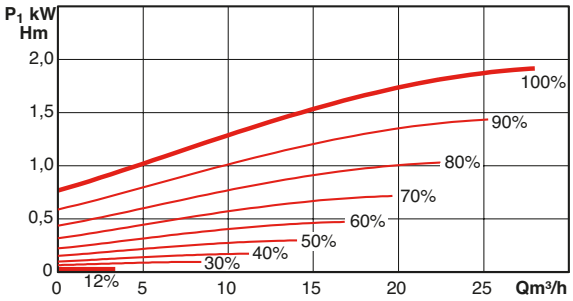

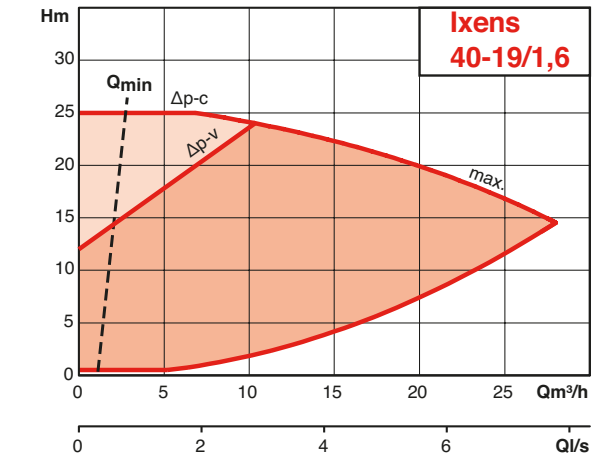

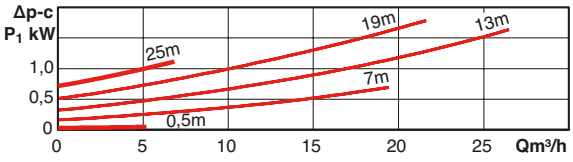

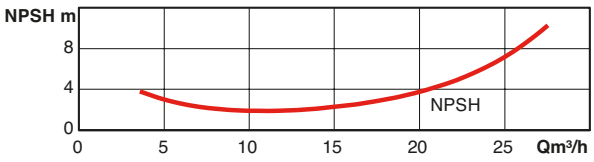

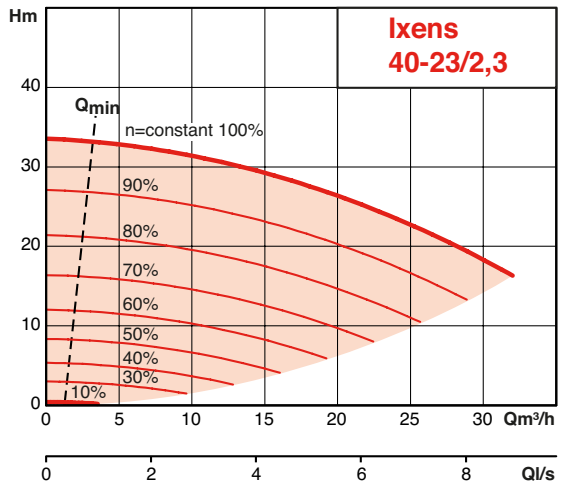

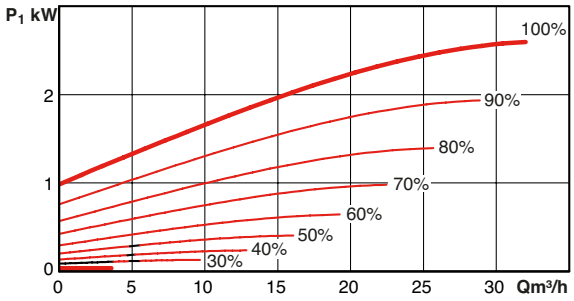

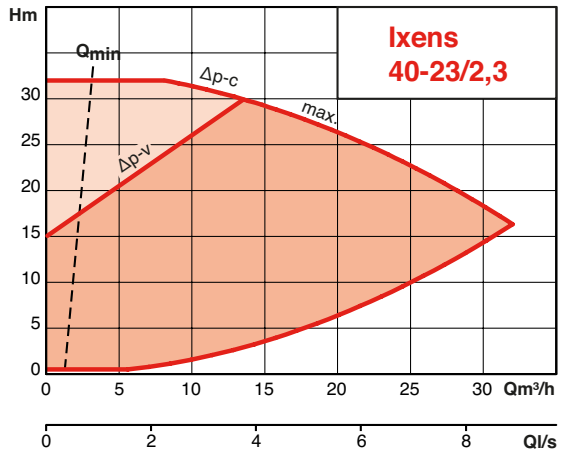

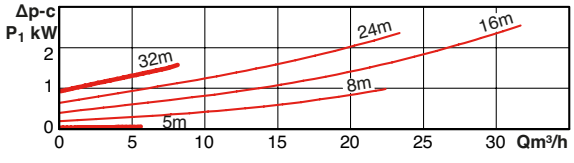

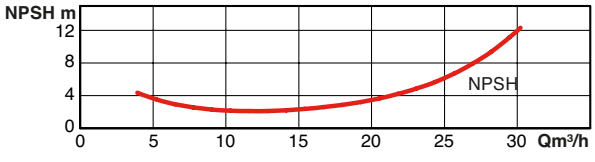

HYDRAULIC PERFORMANCE

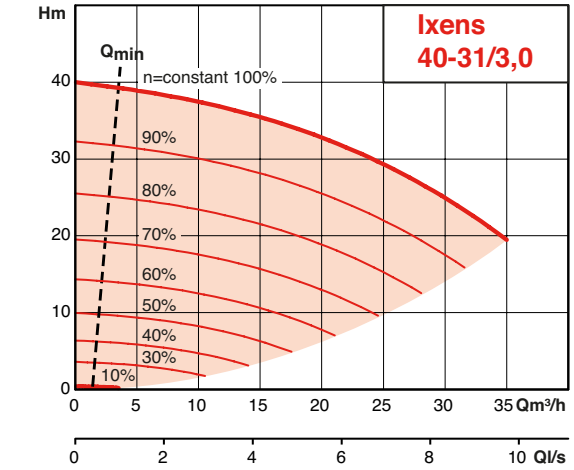

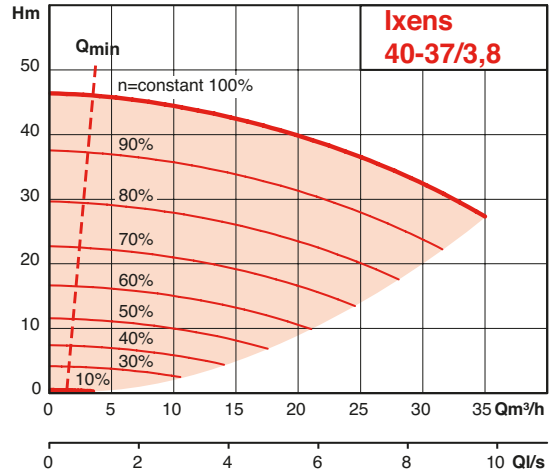

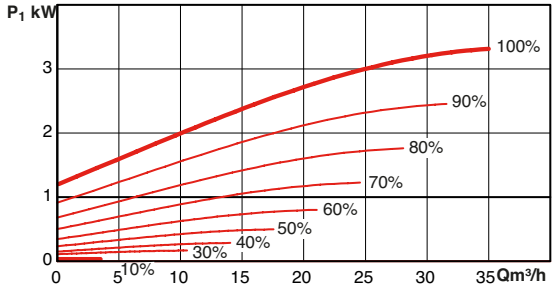

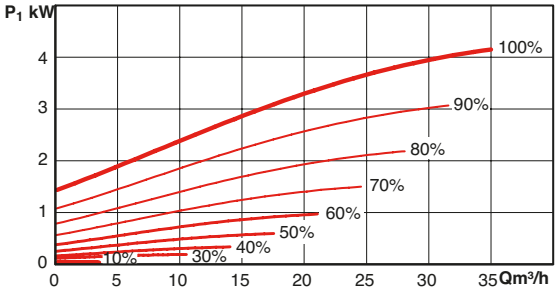

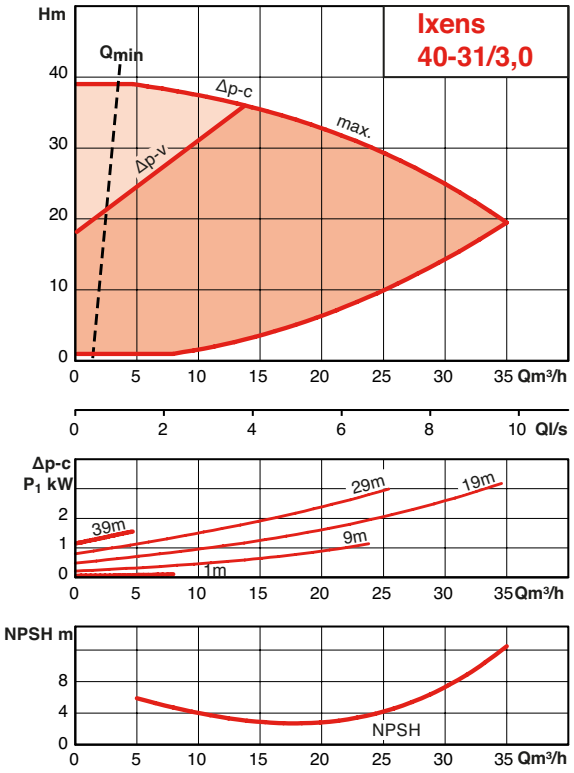

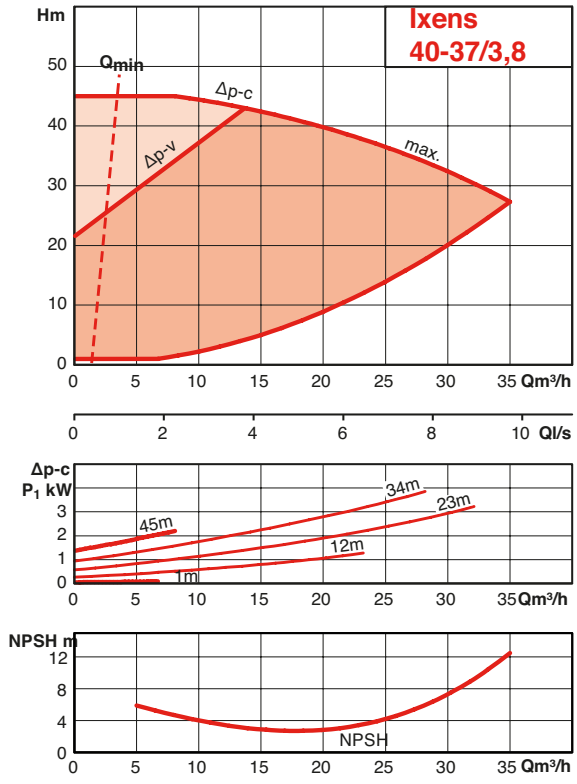

IXENS

HYDRAULIC PERFORMANCE

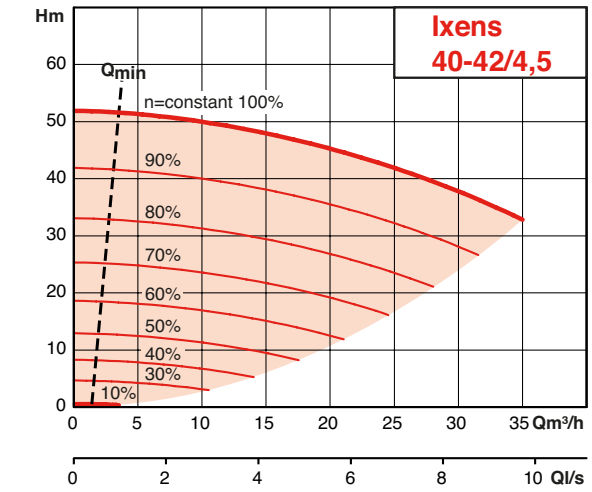

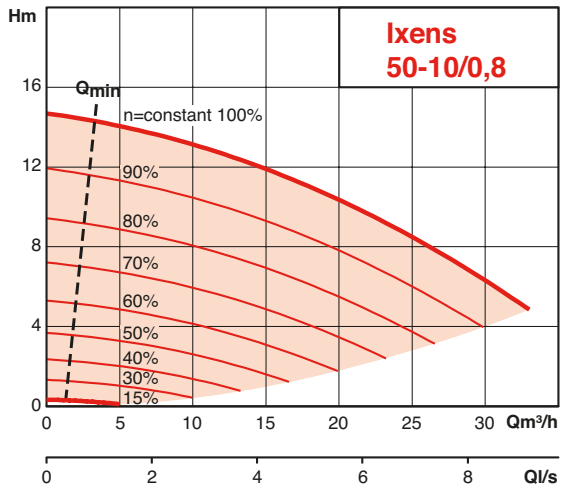

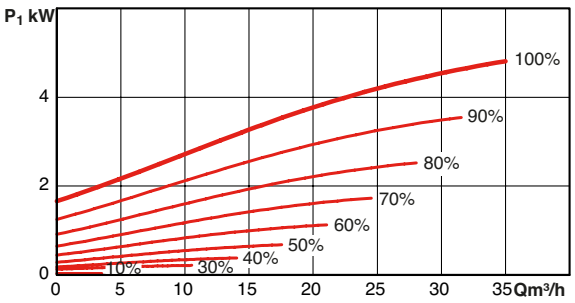

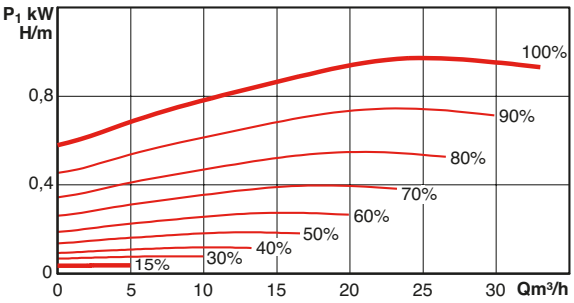

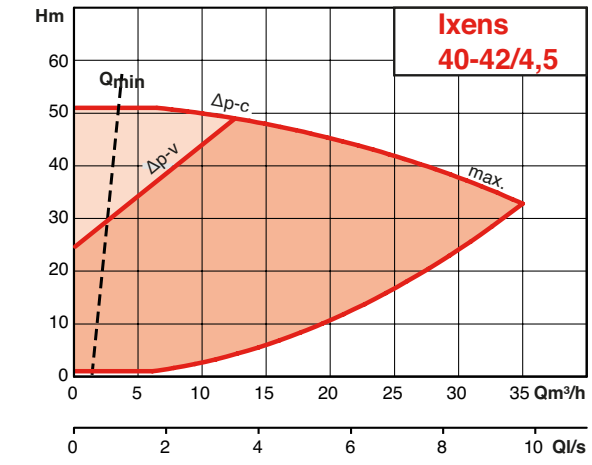

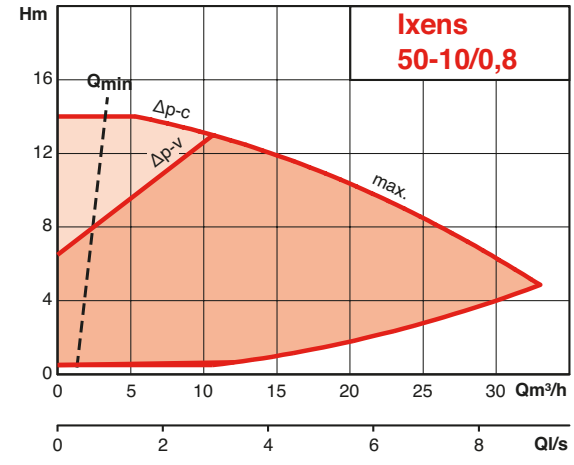

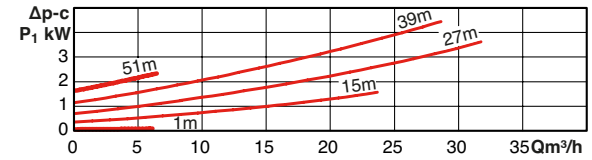

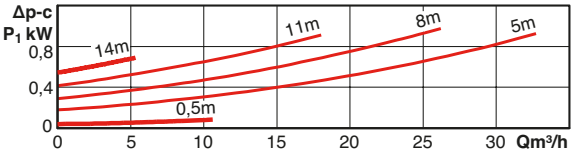

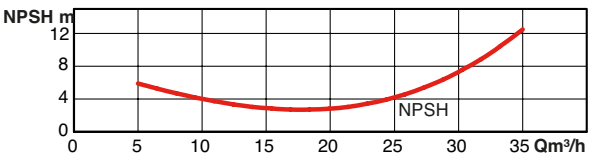

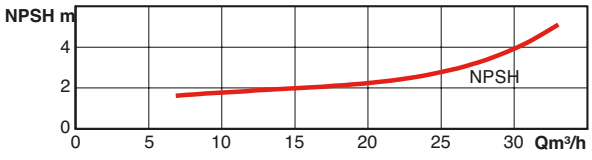

HYDRAULIC PERFORMANCE

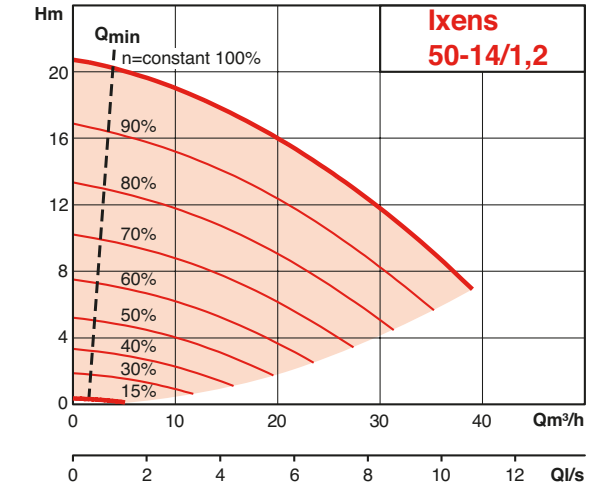

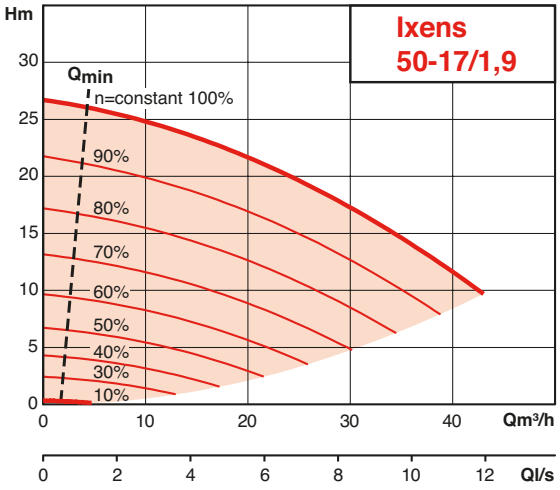

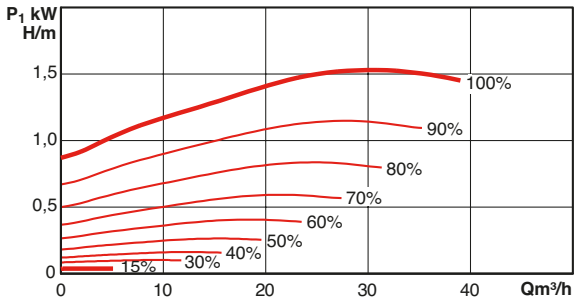

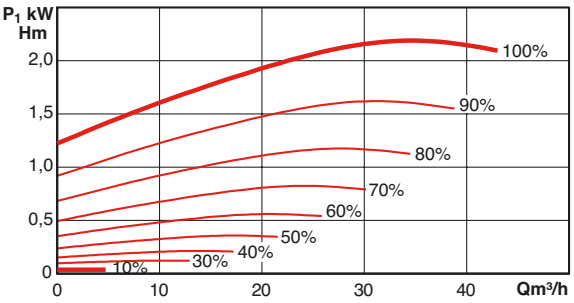

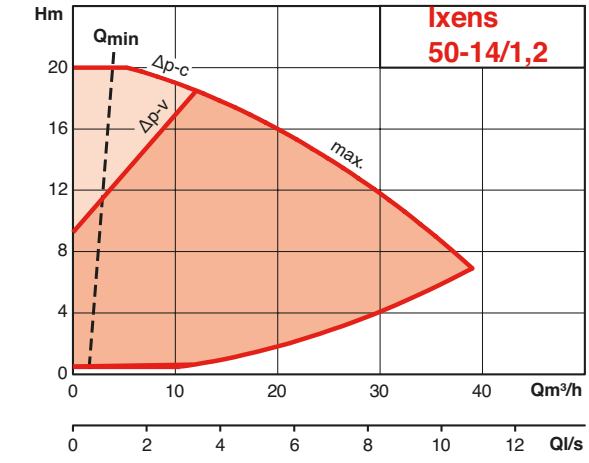

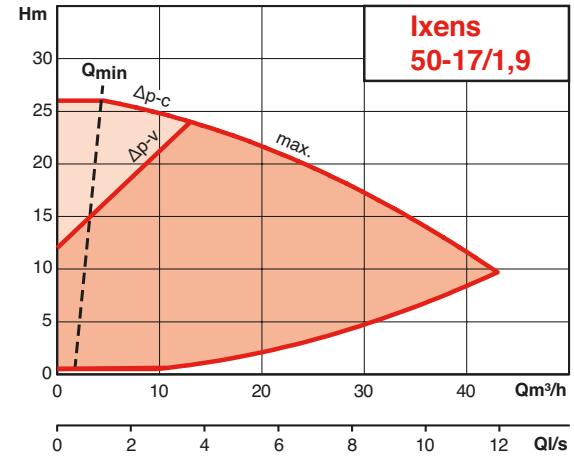

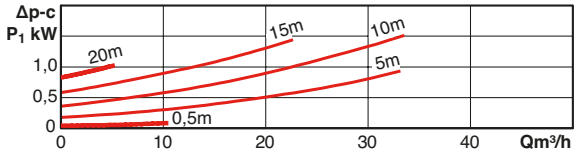

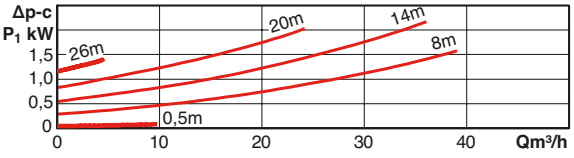

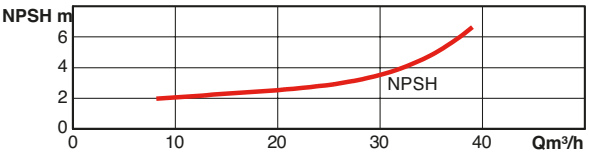

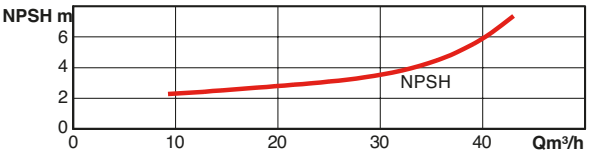

IXENS

HYDRAULIC PERFORMANCE

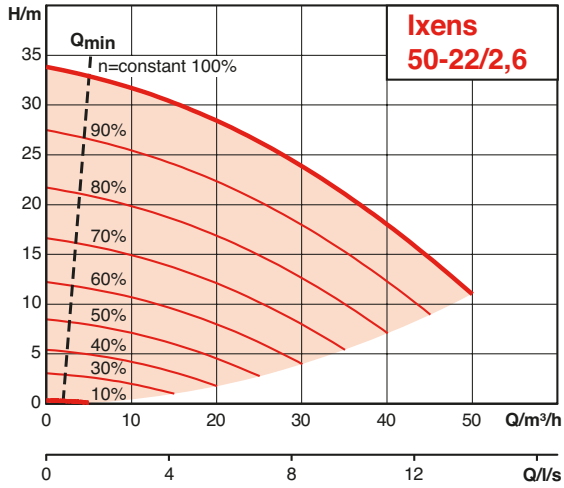

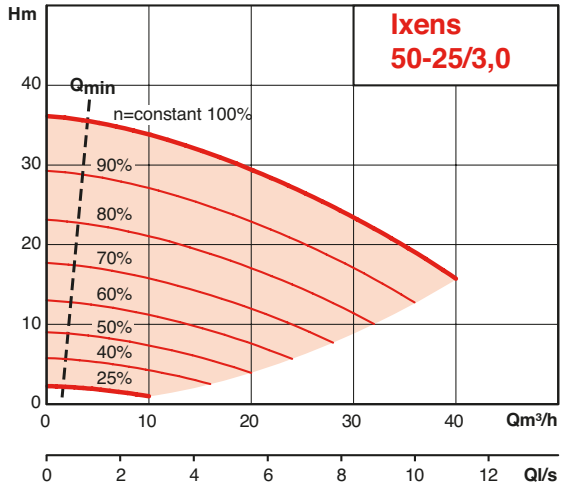

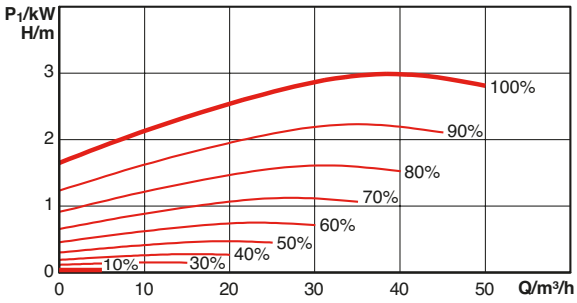

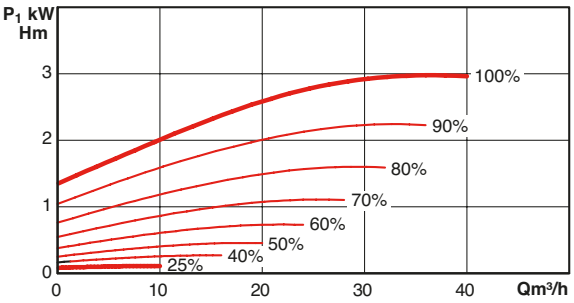

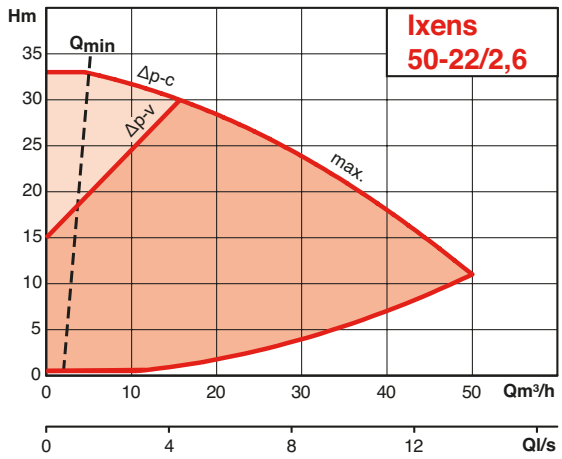

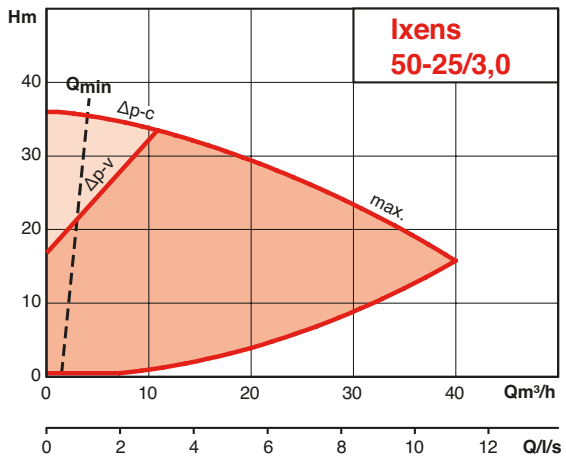

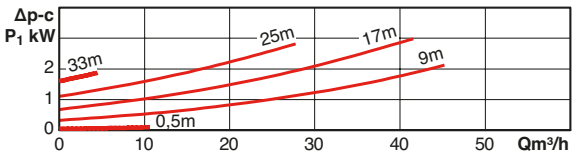

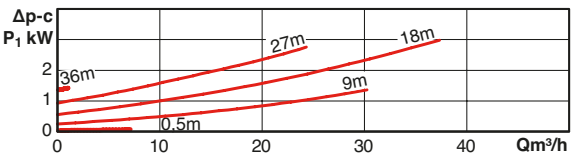

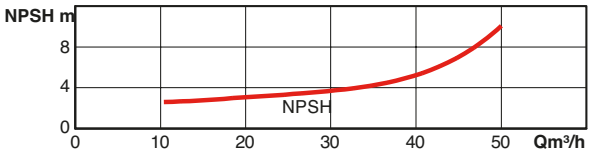

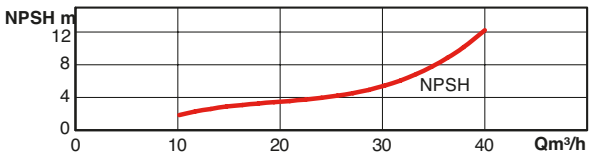

HYDRAULIC PERFORMANCE

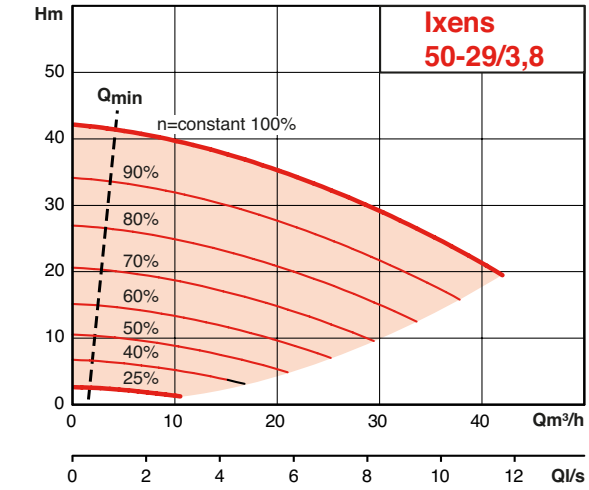

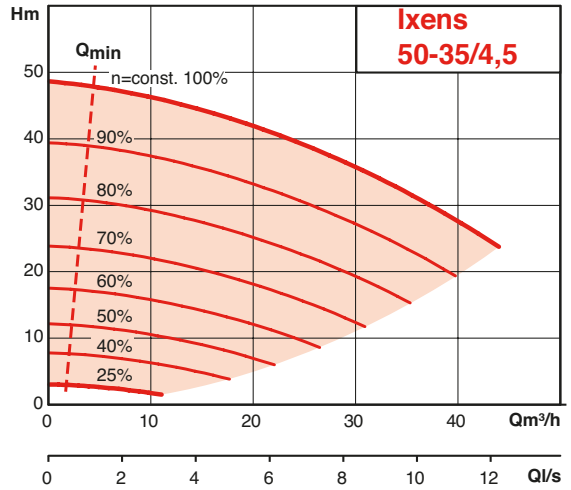

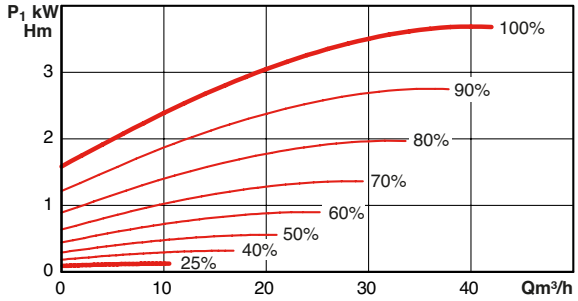

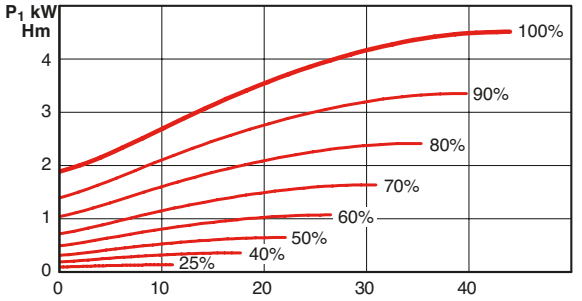

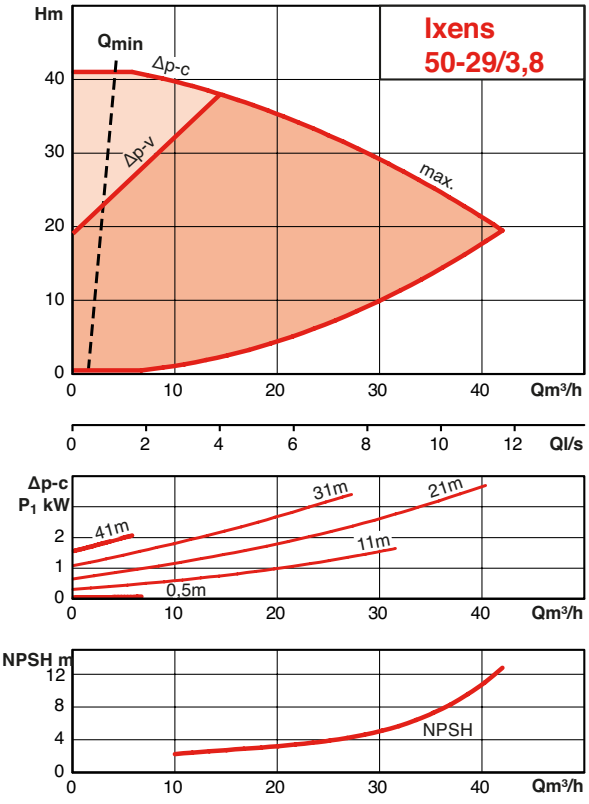

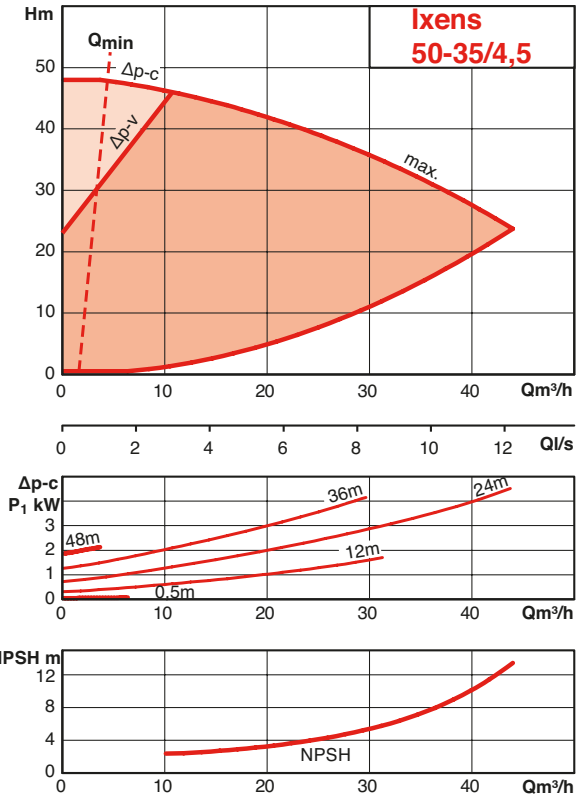

IXENS

HYDRAULIC PERFORMANCE

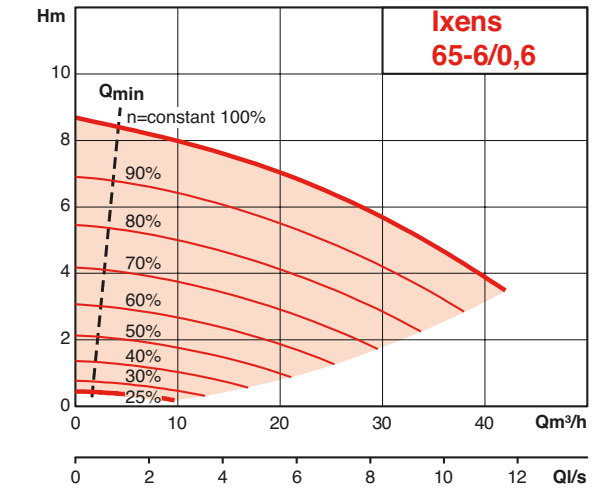

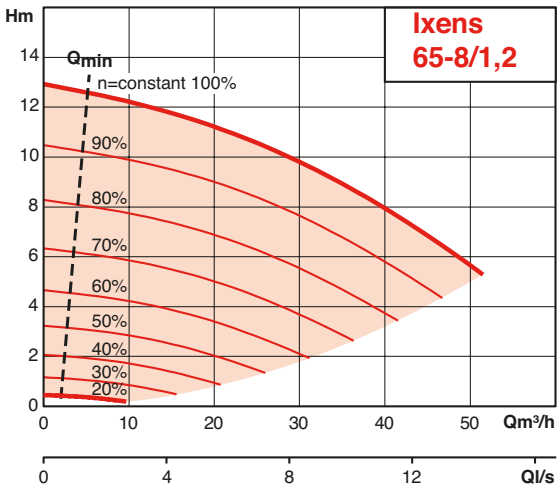

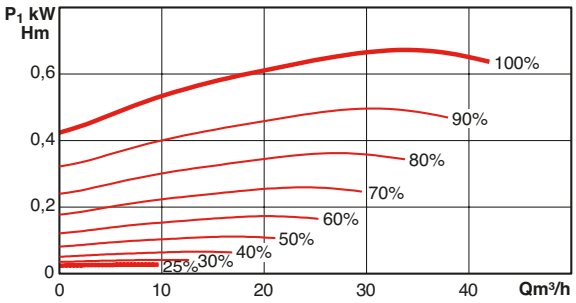

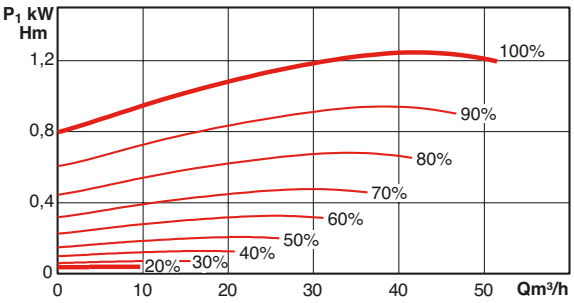

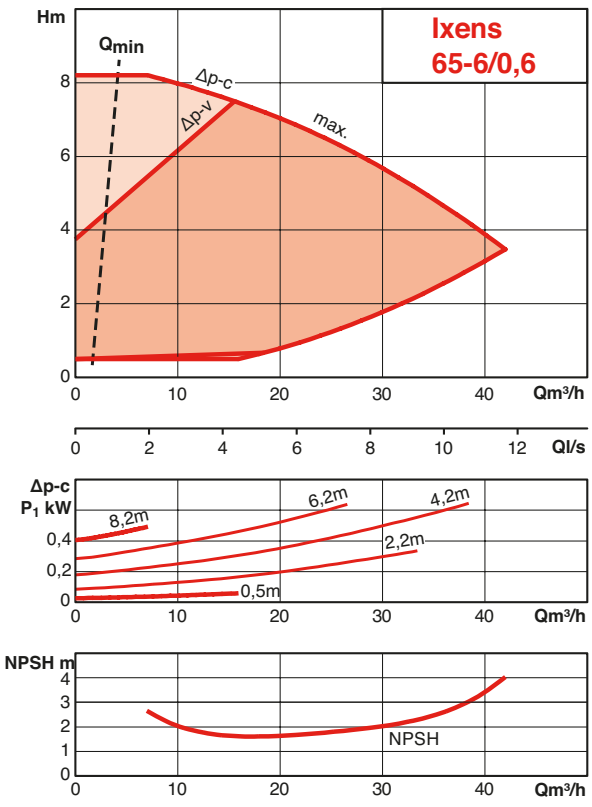

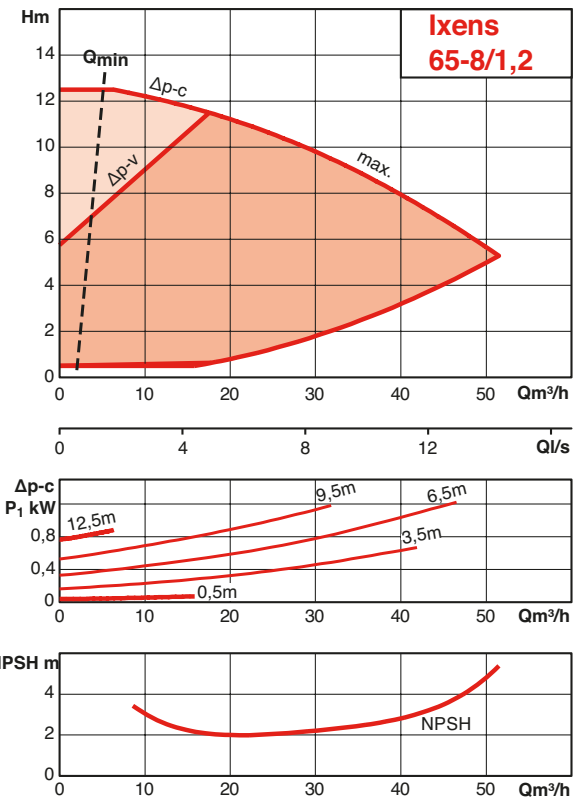

HYDRAULIC PERFORMANCE

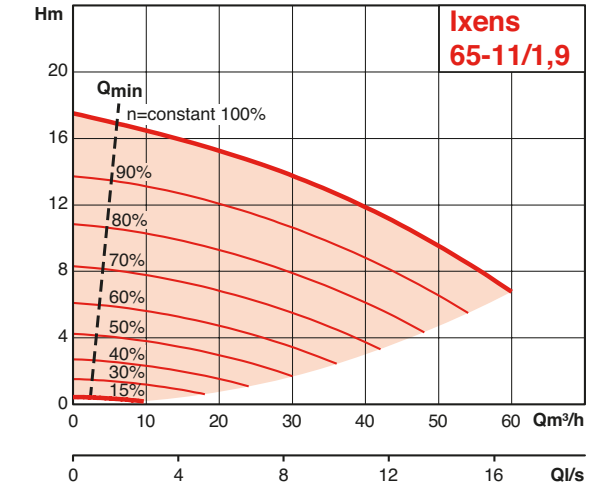

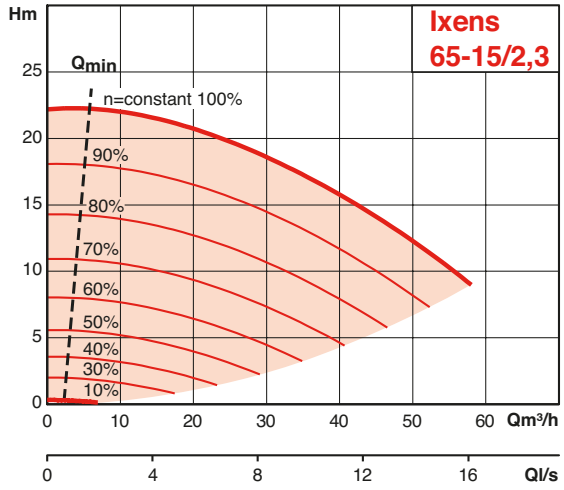

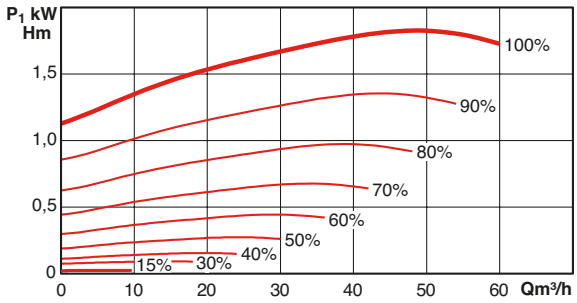

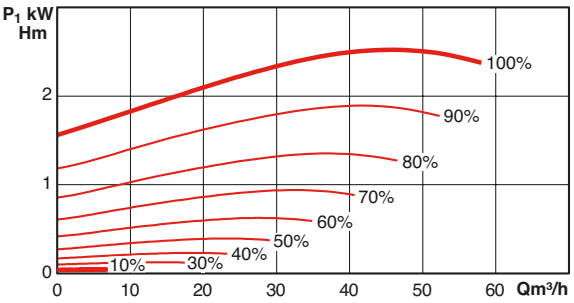

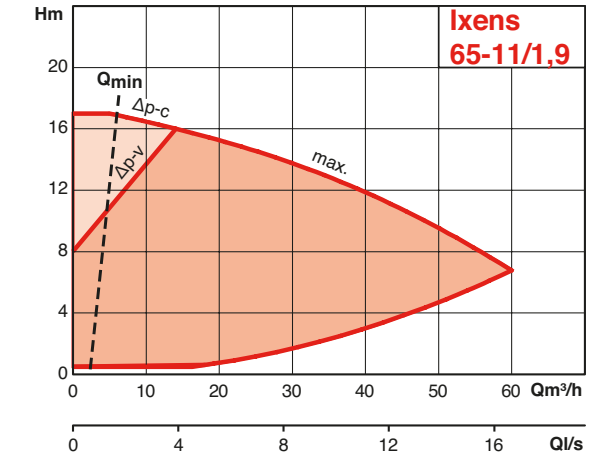

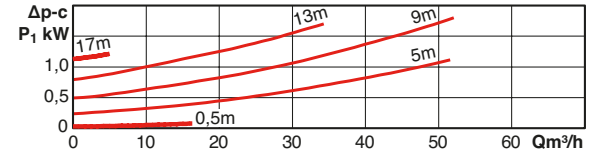

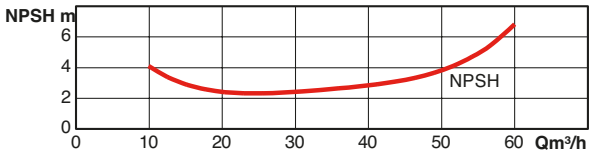

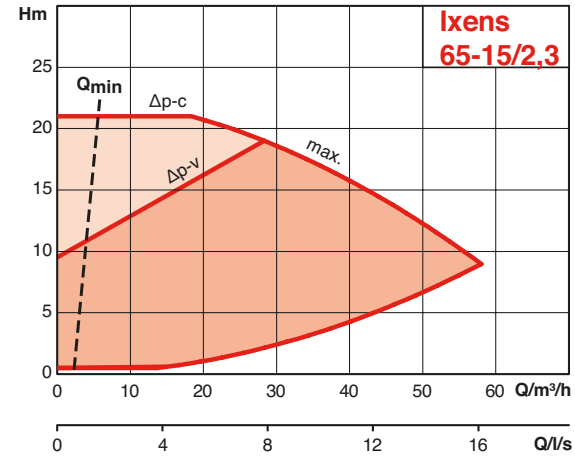

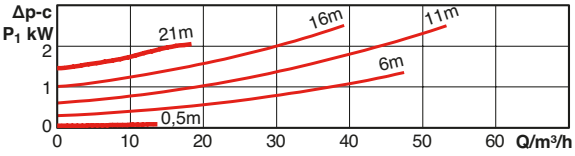

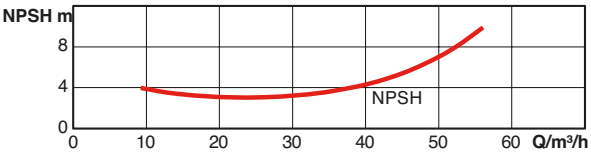

IXENS

HYDRAULIC PERFORMANCE

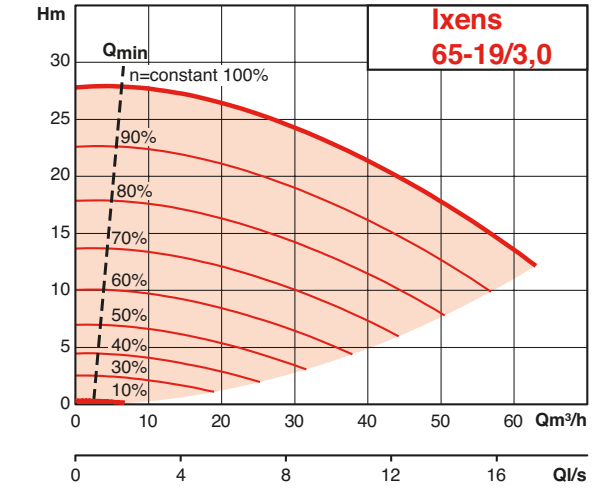

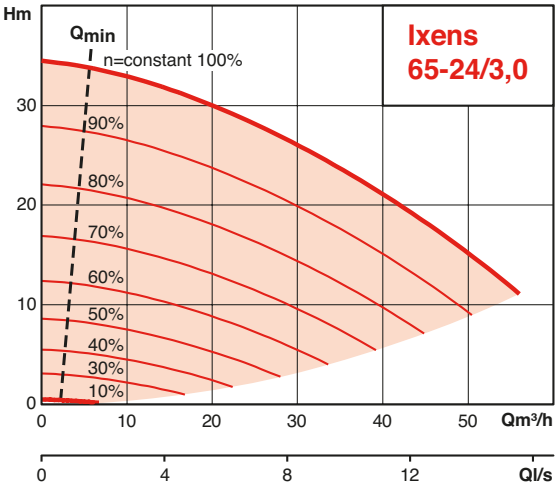

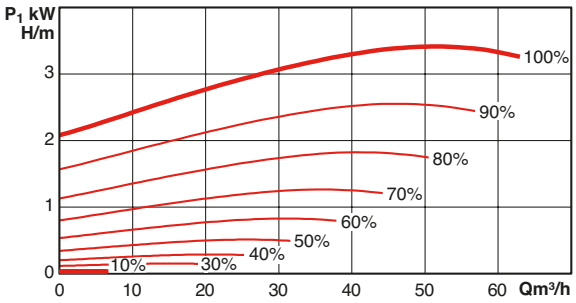

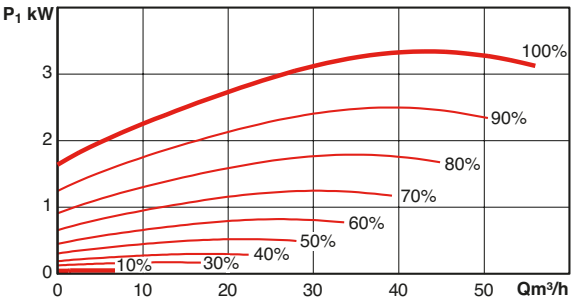

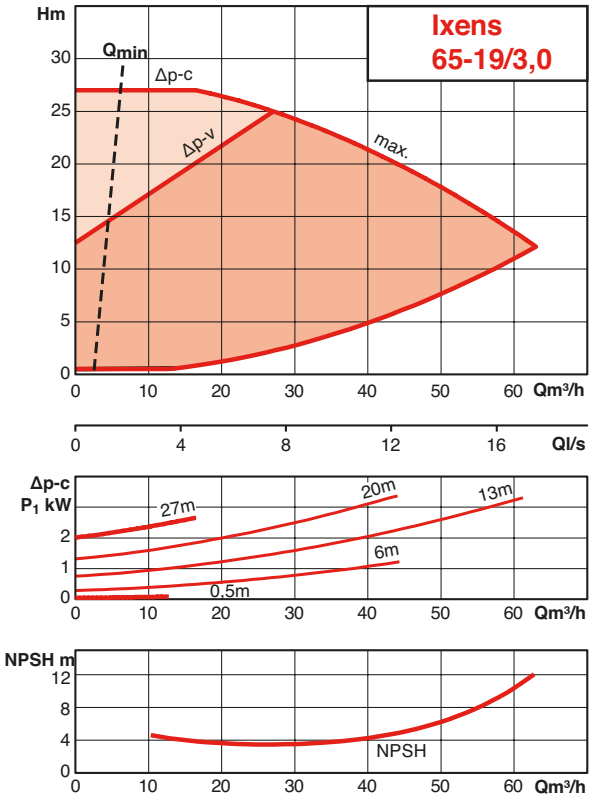

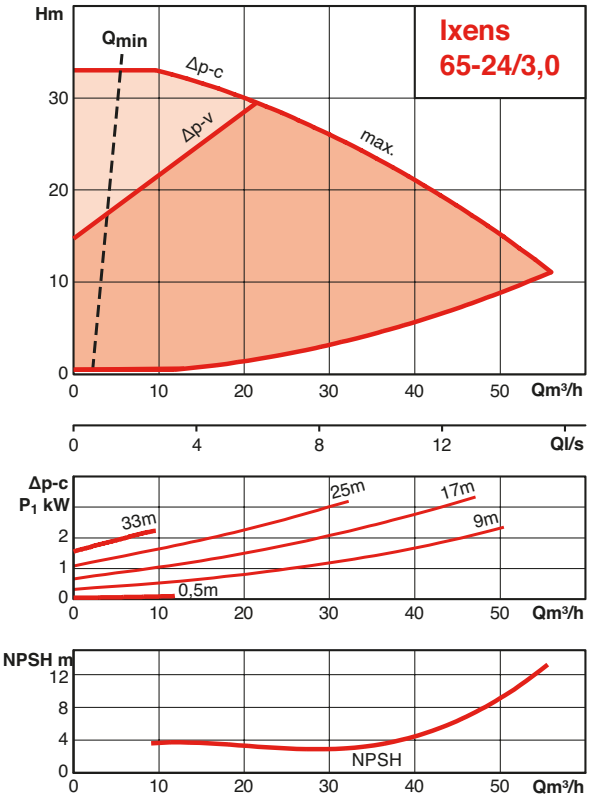

HYDRAULIC PERFORMANCE

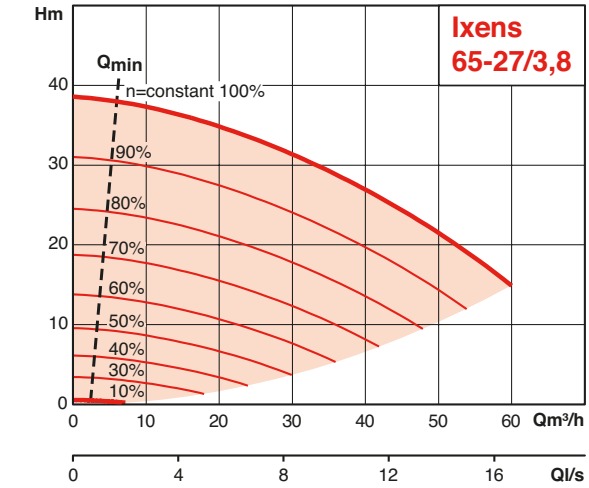

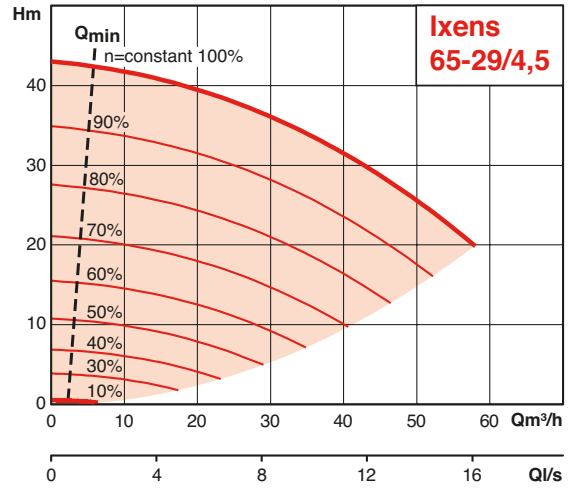

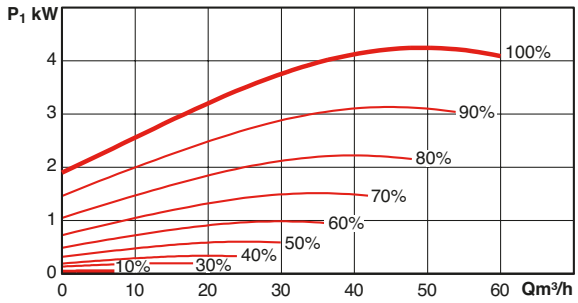

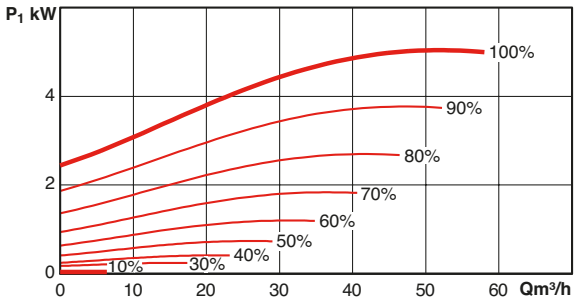

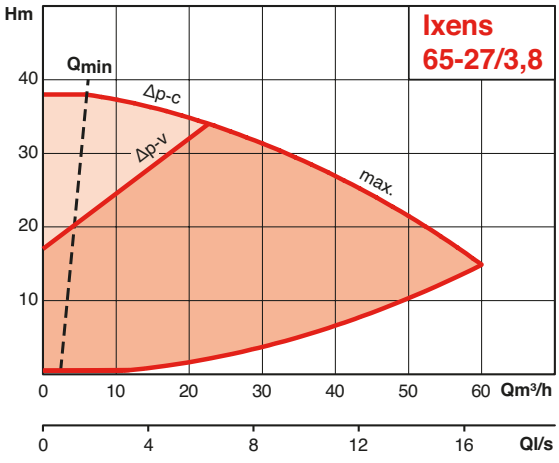

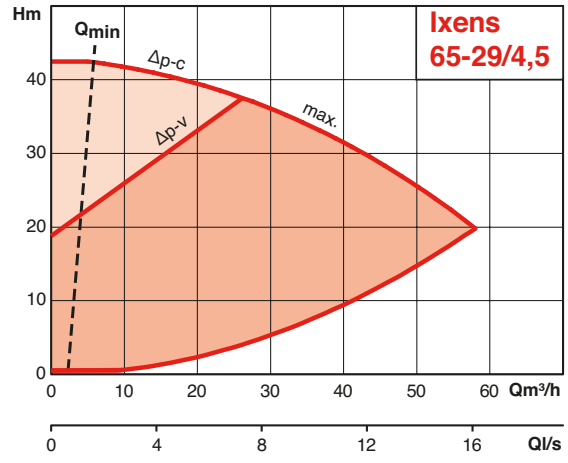

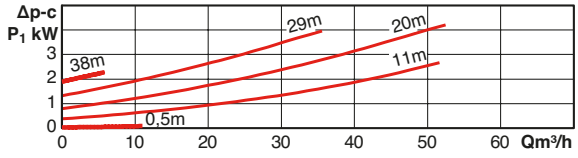

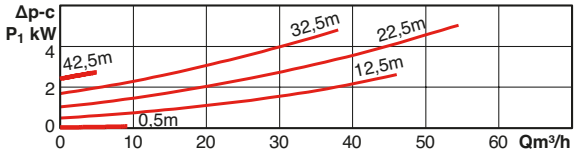

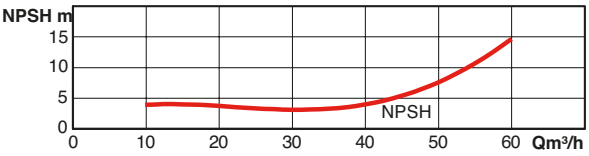

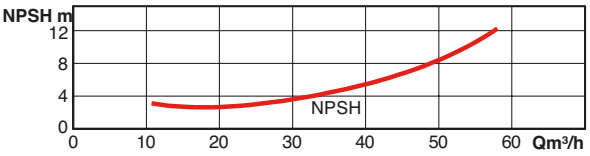

IXENS

HYDRAULIC PERFORMANCE

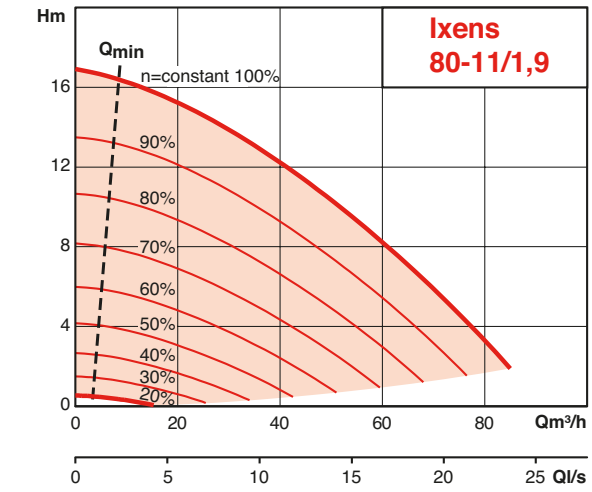

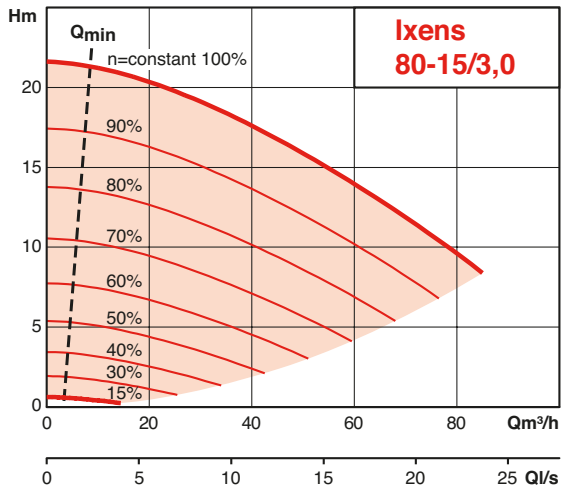

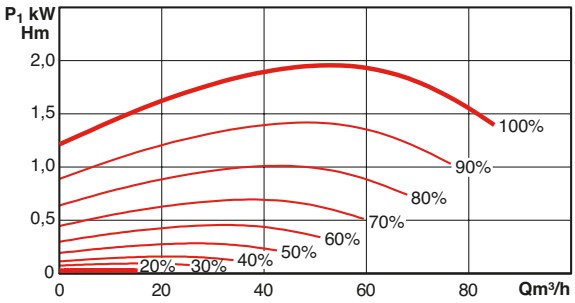

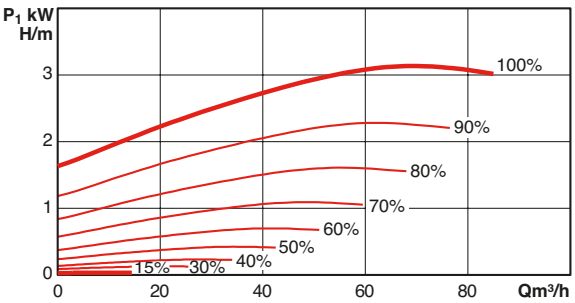

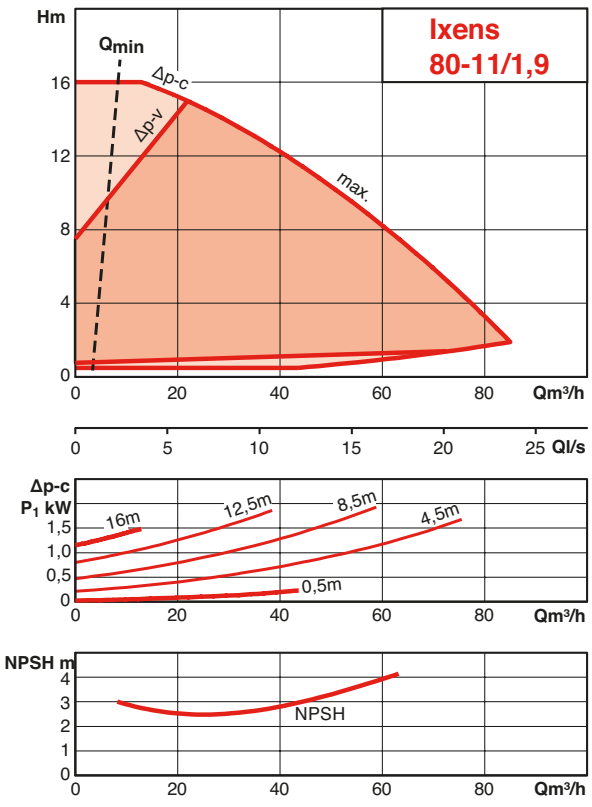

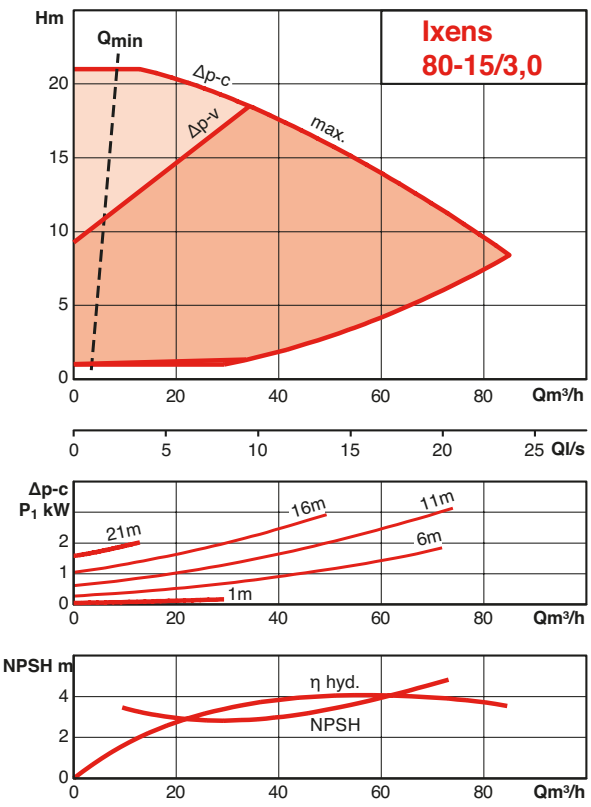

HYDRAULIC PERFORMANCE

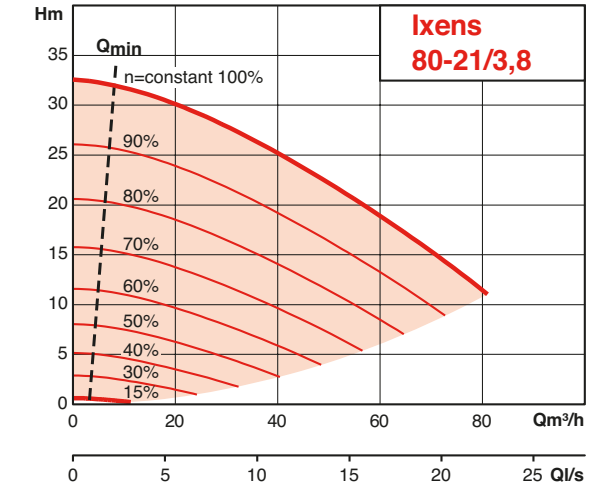

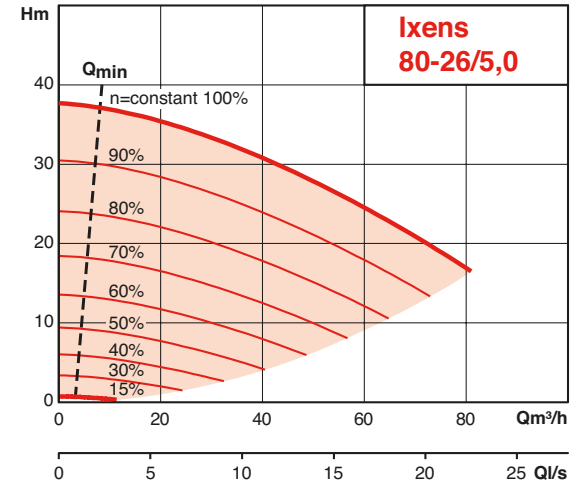

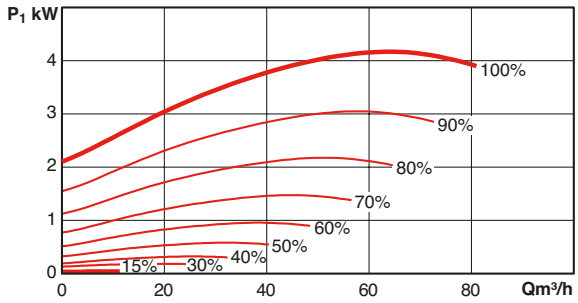

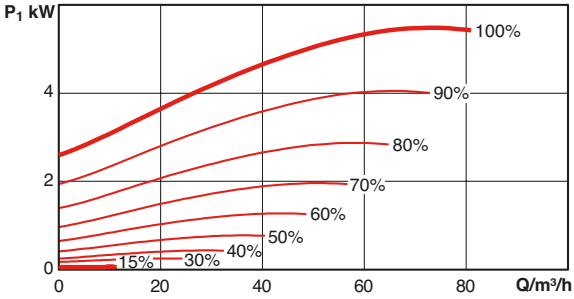

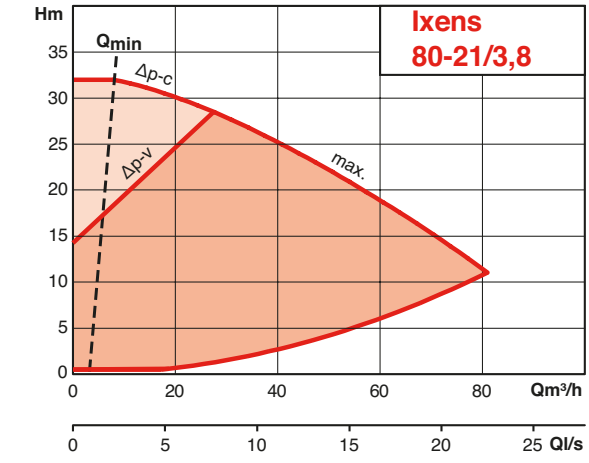

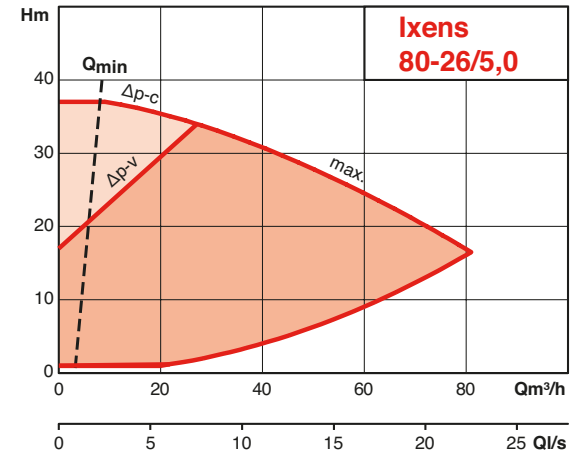

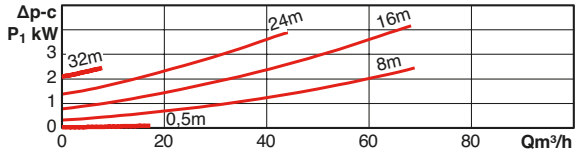

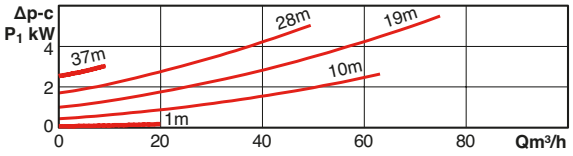

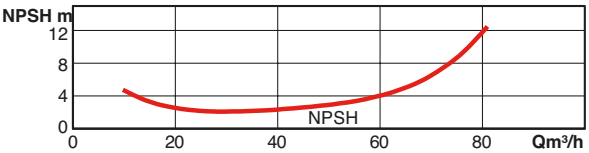

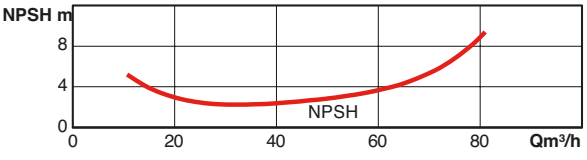

IXENS

HYDRAULIC PERFORMANCE

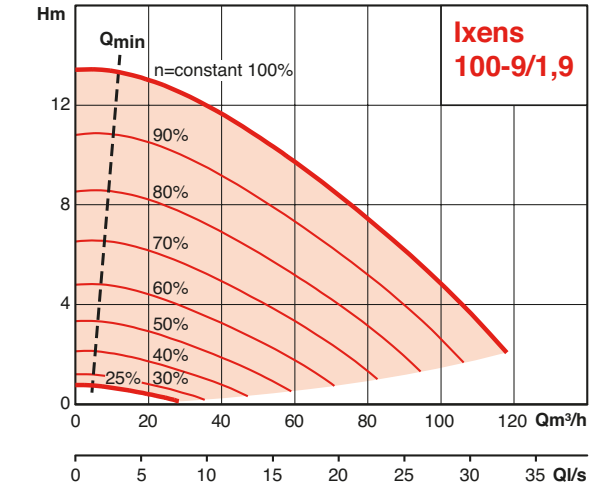

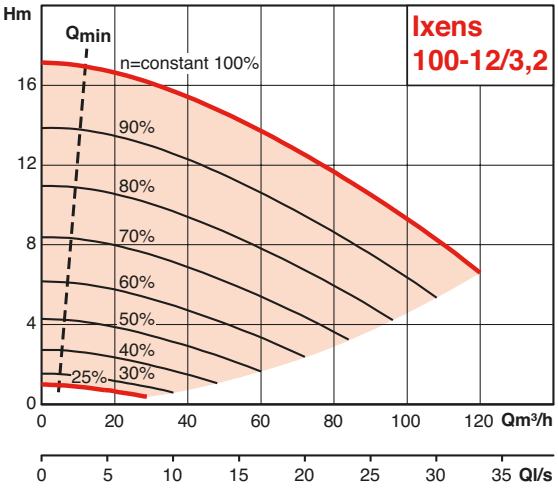

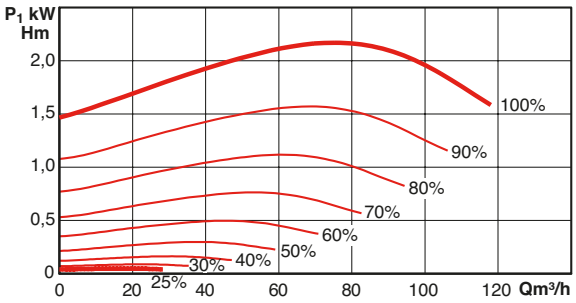

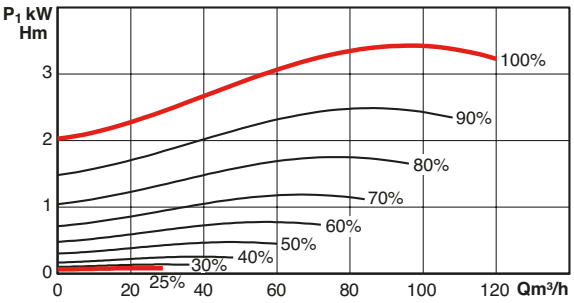

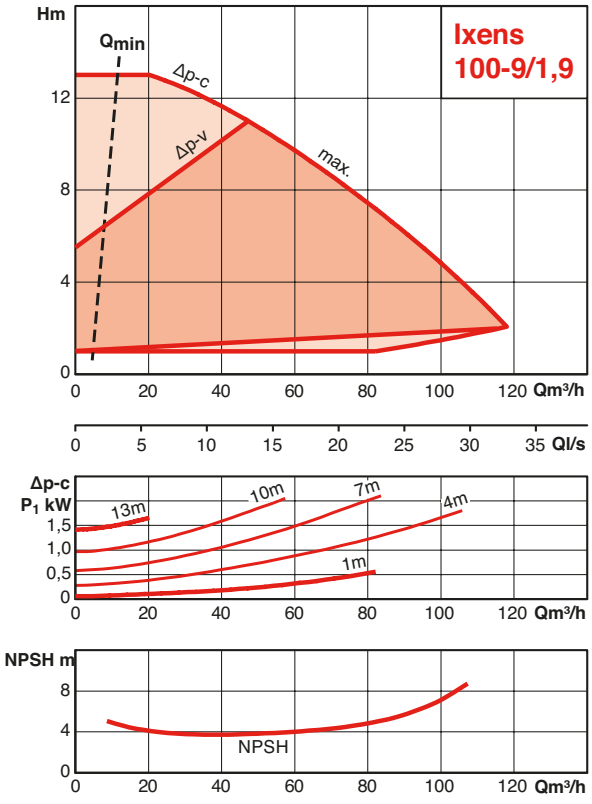

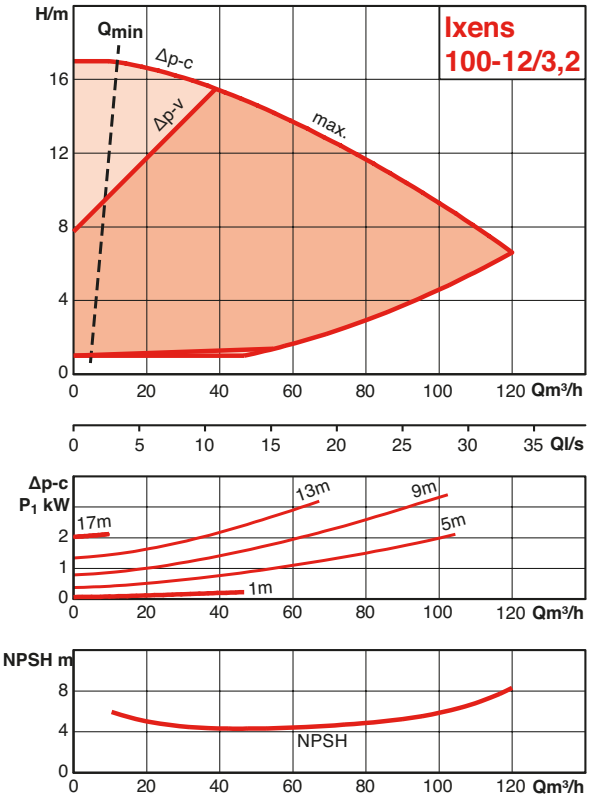

HYDRAULIC PERFORMANCE

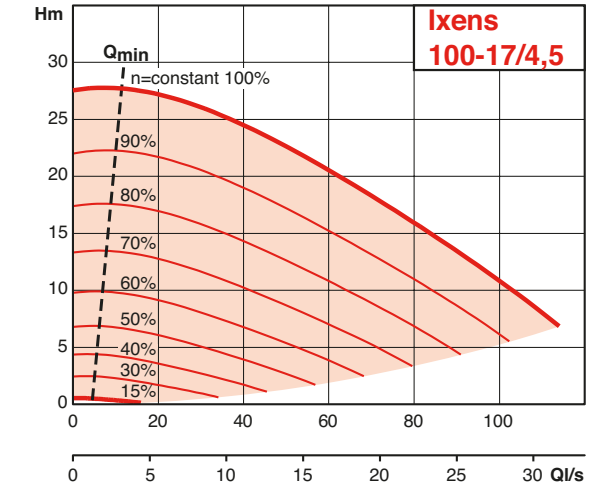

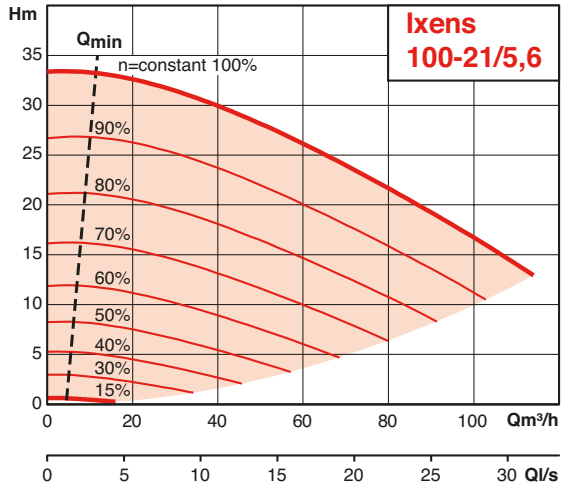

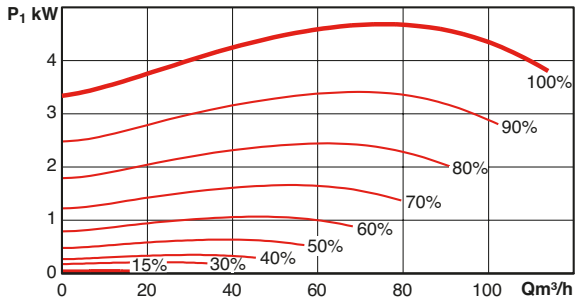

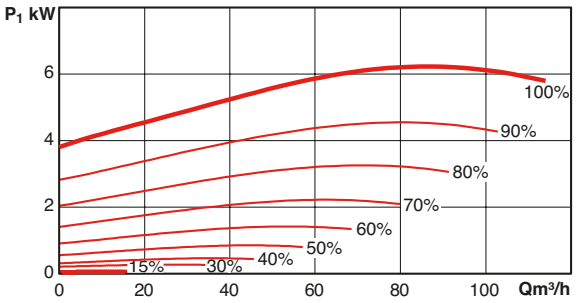

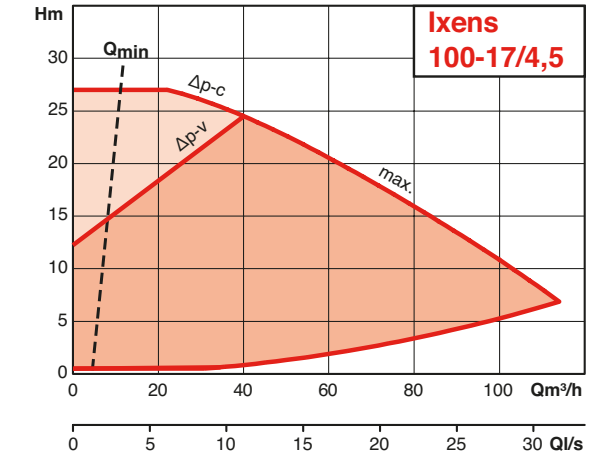

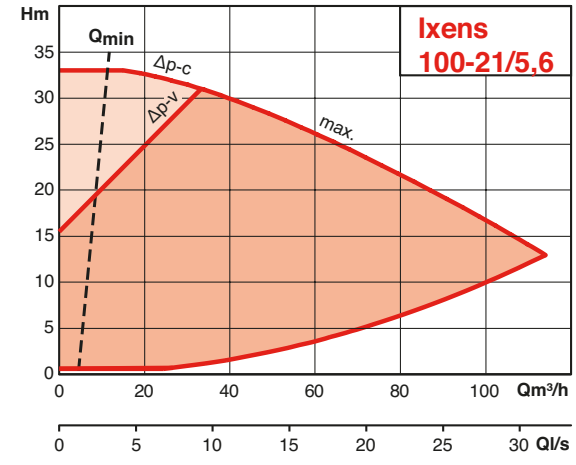

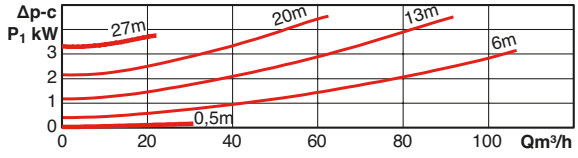

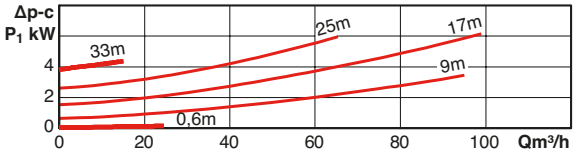

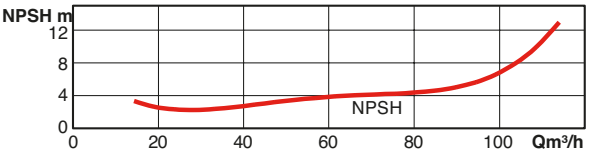

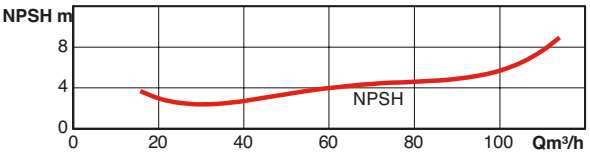

IXENS

ELECTRICAL AND DIMENSIONAL SPECIFICATIONS

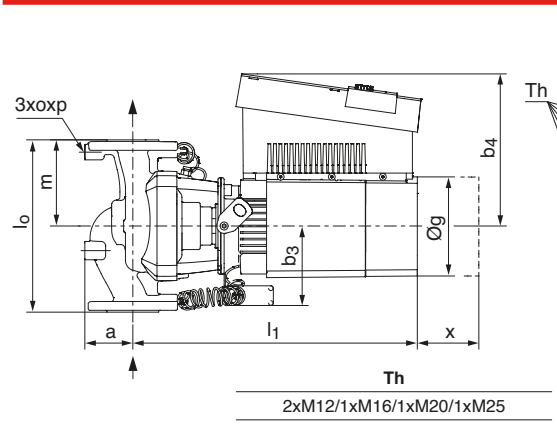

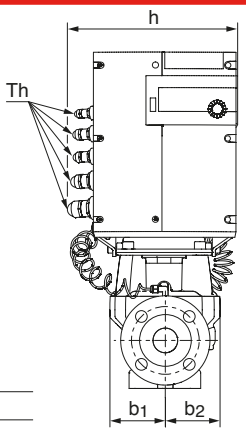

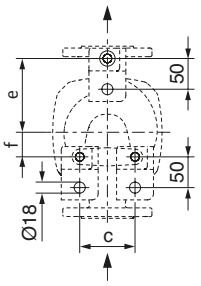

DN	ØD	Øk	Ød	trous
	mm	mm	mm	nxdL
40	150	110	84	4 x 19
50	165	125	99	4 x 19
65	185	145	118	4 x 19
80	200	160	132	8 x 19
100	220	180	156	8 x 19

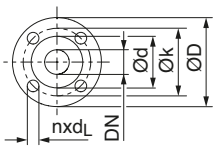

ORDER REFERENCE	MOTOR P2	Speed	Consupt. capacity* max. P1	nominal	DN	PUMP lo	l1	a	b1	b2	b3	b4	c	e	f	g	h	m	o	p	x	mass
	kW	rpm	kW	in A	holes	mm	mm	mm	mm	mm	mm	mm	mm	mm	mm	mm	mm	mm	mm	mm	mm	kg
Ixens 40-19/1,6	1,6	500 - 4000	1900	3.6	40	280	463	78	89	89	129	248	90	120	40	168	277	140	M12	20	225	38
Ixens 40-23/2,3	2,3	500 - 4500	2600	4.7	40	280	463	78	89	89	129	248	90	120	40	168	277	140	M12	20	225	38
Ixens 40-31/3,0	3	500 - 4900	3300	5.6	40	280	463	78	89	89	129	248	90	120	40	168	277	140	M12	20	225	38
Ixens 40-37/3,8	3,8	500 - 4850	4100	6.6	40	280	463	78	89	89	129	248	90	120	40	168	277	140	M12	20	225	38
Ixens 40-42/4,5	4,5	500 - 5130	4800	7.7	40	280	463	78	89	89	129	248	90	120	40	168	277	140	M12	20	225	38
Ixens 50-10/0,8	0,8	500 - 3300	1000	1.6	50	280	455	86	89	89	129	248	96	120	40	168	277	140	M12	20	225	39
Ixens 50-14/1,2	1,2	500 - 3920	1500	2.4	50	280	455	86	89	89	129	248	96	120	40	168	277	140	M12	20	225	39
Ixens 50-17/1,9	1,9	500 - 4450	2100	3.3	50	280	455	86	89	89	129	248	96	120	40	168	277	140	M12	20	225	39
Ixens 50-22/2,6	2,6	500 - 5000	3000	5.4	50	280	455	86	89	89	129	248	96	120	40	168	277	140	M12	20	225	39
Ixens 50-25/3,0	3	500 - 4500	3000	5.5	50	280	455	86	89	89	129	248	90	120	40	168	277	140	M12	20	225	39
Ixens 50-29/3,8	3,8	500 - 4850	3700	6.6	50	280	455	86	89	89	129	248	90	120	40	168	277	140	M12	20	225	39
Ixens 50-35/4,5	4,5	500 - 5110	4500	7.8	50	280	463	86	89	89	129	248	90	120	40	168	277	140	M12	20	225	39
Ixens 65-6/0,6	0,6	500 - 2180	700	1.3	65	340	456	104	90	115	129	248	100	150	70	168	277	170	M12	20	225	44
Ixens 65-8/1,2	1,2	500 - 2680	1300	2.1	65	340	456	104	90	115	129	248	100	150	70	168	277	170	M12	20	225	44
Ixens 65-11/1,9	1,9	500 - 3100	1900	2.9	65	340	456	104	90	115	129	248	100	150	70	168	277	170	M12	20	225	44
Ixens 65-15/2,3	2,3	500 - 4200	2600	4.7	65	340	454	100	90	103	129	248	100	150	70	168	277	170	M12	20	225	43
Ixens 65-19/3,0	3	500 - 4700	3500	6.4	65	340	454	100	90	103	129	248	100	150	70	168	277	170	M12	20	225	43
Ixens 65-24/3,0	3	500 - 4500	3400	6.3	65	340	452	100	88	98	129	248	100	150	70	168	277	170	M12	20	225	43
Ixens 65-27/3,8	3,8	500 - 4500	4300	7.4	65	340	452	100	88	98	129	248	100	150	70	168	277	170	M12	20	225	43
Ixens 65-29/4,5	5	500 - 4800	5100	8.6	65	340	545	100	88	98	129	267	100	150	70	175	277	170	M12	20	225	43
Ixens 80-11/1,9	2,3	500 - 2850	2000	3.8	80	360	460	114	98	128	129	248	120	160	90	168	277	180	M12	20	225	48
Ixens 80-15/3,0	3,8	500 - 2950	3200	5.8	80	360	460	114	98	128	129	248	120	160	90	168	277	180	M12	20	225	48
Ixens 80-21/3,8	5	500 - 3700	4200	7.6	80	360	549	105	110	114	129	267	120	160	90	175	277	180	M12	20	225	55
Ixens 80-26/5,0	6,4	500 - 3700	5500	9.4	80	360	551	105	110	114	129	280	120	160	90	199	277	180	M12	20	225	59
Ixens 100-9/1,9	2,6	500 - 2100	2200	4.2	100	450	551	144	114	158	129	255	140	195	90	175	277	215	M12	20	225	65
Ixens 100-12/3,2	4,1	500 - 2160	3400	6.3	100	450	551	144	114	158	129	255	140	195	90	175	277	215	M12	20	225	65
Ixens 100-17/4,5	5	500 - 3700	4800	8.2	100	450	540	136	110	142	129	267	140	195	90	175	277	225	M12	20	225	65
Ixens 100-21/5,6	6,9	500 - 3700	6300	10.4	100	450	543	136	110	142	129	280	140	195	90	199	277	225	M12	20	225	68
Ixens 40-19/1,6-R1	1,6	500 - 4000	1900	3.6	40	280	463	78	89	89	129	248	90	120	40	168	277	140	M12	20	225	38
Ixens 40-23/2,3-R1	2,3	500 - 4500	2600	4.7	40	280	463	78	89	89	129	248	90	120	40	168	277	140	M12	20	225	38
Ixens 40-31/3,0-R1	3	500 - 4900	3300	5.6	40	280	463	78	89	89	129	248	90	120	40	168	277	140	M12	20	225	38
Ixens 40-37/3,8-R1	3,8	500 - 4850	4100	6.6	40	280	463	78	89	89	129	248	90	120	40	168	277	140	M12	20	225	38
Ixens 40-42/4,5-R1	4,5	500 - 5130	4800	7.7	40	280	463	78	89	89	129	248	90	120	40	168	277	140	M12	20	225	38
Ixens 50-10/0,8-R1	0,8	500 - 3300	1000	1.6	50	280	455	86	89	89	129	248	96	120	40	168	277	140	M12	20	225	39
Ixens 50-14/1,2-R1	1,2	500 - 3920	1500	2.4	50	280	455	86	89	89	129	248	96	120	40	168	277	140	M12	20	225	39
Ixens 50-17/1,9-R1	1,9	500 - 4450	2100	3.3	50	280	455	86	89	89	129	248	96	120	40	168	277	140	M12	20	225	39
Ixens 50-22/2,6-R1	2,6	500 - 5000	3000	5.4	50	280	455	86	89	89	129	248	96	120	40	168	277	140	M12	20	225	39
Ixens 50-25/3,0-R1	3	500 - 4500	3000	5.5	50	280	455	86	89	89	129	248	90	120	40	168	277	140	M12	20	225	39
Ixens 50-29/3,8-R1	3,8	500 - 4850	3700	6.6	50	280	455	86	89	89	129	248	90	120	40	168	277	140	M12	20	225	39
Ixens 50-35/4,5-R1	4,5	500 - 5110	4500	7.8	50	280	463	86	89	89	129	248	90	120	40	168	277	140	M12	20	225	39
Ixens 65-6/0,6-R1	0,6	500 - 2180	700	1.3	65	340	456	104	90	115	129	248	100	150	70	168	277	170	M12	20	225	44
Ixens 65-8/1,2-R1	1,2	500 - 2680	1300	2.1	65	340	456	104	90	115	129	248	100	150	70	168	277	170	M12	20	225	44
Ixens 65-11/1,9-R1	1,9	500 - 3100	1900	2.9	65	340	456	104	90	115	129	248	100	150	70	168	277	170	M12	20	225	44
Ixens 65-15/2,3-R1	2,3	500 - 4200	2600	4.7	65	340	454	100	90	103	129	248	100	150	70	168	277	170	M12	20	225	43
Ixens 65-19/3,0-R1	3	500 - 4700	3500	6.4	65	340	454	100	90	103	129	248	100	150	70	168	277	170	M12	20	225	43
Ixens 65-24/3,0-R1	3	500 - 4500	3400	6.3	65	340	452	100	88	98	129	248	100	150	70	168	277	170	M12	20	225	43
Ixens 65-27/3,8-R1	3,8	500 - 4500	4300	7.4	65	340	452	100	88	98	129	248	100	150	70	168	277	170	M12	20	225	43
Ixens 65-29/4,5-R1	5	500 - 4800	5100	8.6	65	340	545	100	88	98	129	267	100	150	70	175	277	170	M12	20	225	43
Ixens 80-11/1,9-R1	2,3	500 - 2850	2000	3.8	80	360	460	114	98	128	129	248	120	160	90	168	277	180	M12	20	225	48
Ixens 80-15/3,0-R1	3,8	500 - 2950	3200	5.8	80	360	460	114	98	128	129	248	120	160	90	168	277	180	M12	20	225	48
Ixens 80-21/3,8-R1	5	500 - 3700	4200	7.6	80	360	549	105	110	114	129	267	120	160	90	175	277	180	M12	20	225	55
Ixens 80-26/5,0-R1	6,4	500 - 3700	5500	9.4	80	360	551	105	110	114	129	280	120	160	90	199	277	180	M12	20	225	59
Ixens 100-9/1,9-R1	2,6	500 - 2100	2200	4.2	100	450	551	144	114	158	129	255	140	195	90	175	277	215	M12	20	225	65
Ixens 100-12/3,2-R1	4,1	500 - 2160	3400	6.3	100	450	551	144	114	158	129	255	140	195	90	175	277	215	M12	20	225	65
Ixens 100-17/4,5-R1	5	500 - 3700	4800	8.2	100	450	540	136	110	142	129	267	140	195	90	175	277	225	M12	20	225	65
Ixens 100-21/5,6-R1	6,9	500 - 3700	6300	10.4	100	450	543	136	110	142	129	280	140	195	90	199	277	225	M12	20	225	68

*Check the motor plate

RANGES OF USE

Flow rates up to:	**80 m³/h**
Dynamic head up to:	**38 m**
Max. operating pressure:*	
• Thermal fluids 9 bar	**9 bar**
• Superheated water 23 bar	**23 bar**
Max. temperature:*	
• Thermal fluids	**350°C**
• Superheated water	**210°C**
Opening DN:	20 to 80

* Under max. pressure / temperature conditions, contact us

GET

SIMPLE SELF-COOLING IN-LINE PUMPS

Thermal fluids – Superheated water 50 Hz

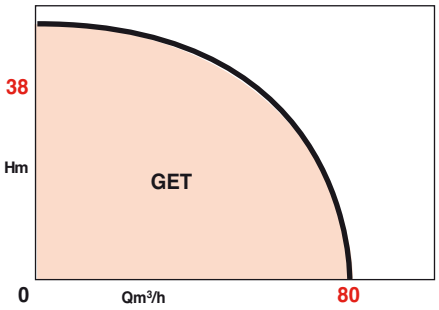

APPLICATIONS

- Heat transfer systems in closed circuits by:
  - Coolants or thermal fluids (mineral oils, synthetic hydrocarbons, etc.).
  - Pressurised hot water.
- All manufacturing or transformation industries:
  - Chemicals - Pharmaceuticals.
  - Food - Textiles - Paper - Leather.
  - Rubber - Colourings - Varnish…
  - Solar energy (greenhouses, swimming pools, etc.).

ADVANTAGES

- **Cooling by air both for superheated water (+ 210°C) and thermal fluids (+ 350°C).**
- **Flanges and back-flanges with double male / female joints ensuring that the installed pump is completely watertight irrespective of the vehicle transported.**
- **Water consumption savings; no secondary cooling water circuit required.**
- **Quick and easy installation: direct assembly on pipes.**



• GET 133-4 - 4 pole motor



• GET 131-2 - 2 pole motor

GET

DESIGN

• Hydraulic section

- Centrifugal, single stage.
- Single-section unit.
- Wheel assembled directly on motor shaft.
- Flanged pump housing D.E.F. PN 25.
- Cooler with integrated blades on base.
- Pump / motor connection by spacer.
- Shaft section made watertight thanks to mechanical seal.

Two versions

Thermal fluids	GET-C
Superheated water	GET-E

• Motor

High output IE2
Extended shaft end.

Speed:	2 poles : 2900 rpm. 4 poles : 1450 rpm.
Winding:	3~: 230-400 V
Frequency:	50 Hz (option 60 Hz)
Insulation category:	155 (F)
Protection index:	IP 55
CE compliance:	EN 809

BASIC CONSTRUCTION

Main parts	Material
Pump housing	Steel GE 280
Closed impeller	Cast iron EN GJL 250
Base and spacer	Cast iron EN GJS 400-15
Shaft	Stainless steel X6 Cr Ni Mo17.12.2
Mechanical seal	
GET-E	Graphite/Si/EP carbide
GET-C	Graphite/Si/Viton carbide

IDENTIFICATION

GET-C-131-2

Product code

C : Thermal fluids
E : Superheated water

Pump size

2 poles 2900 rpm
4 poles 1450 rpm

SECTIONAL DRAWING

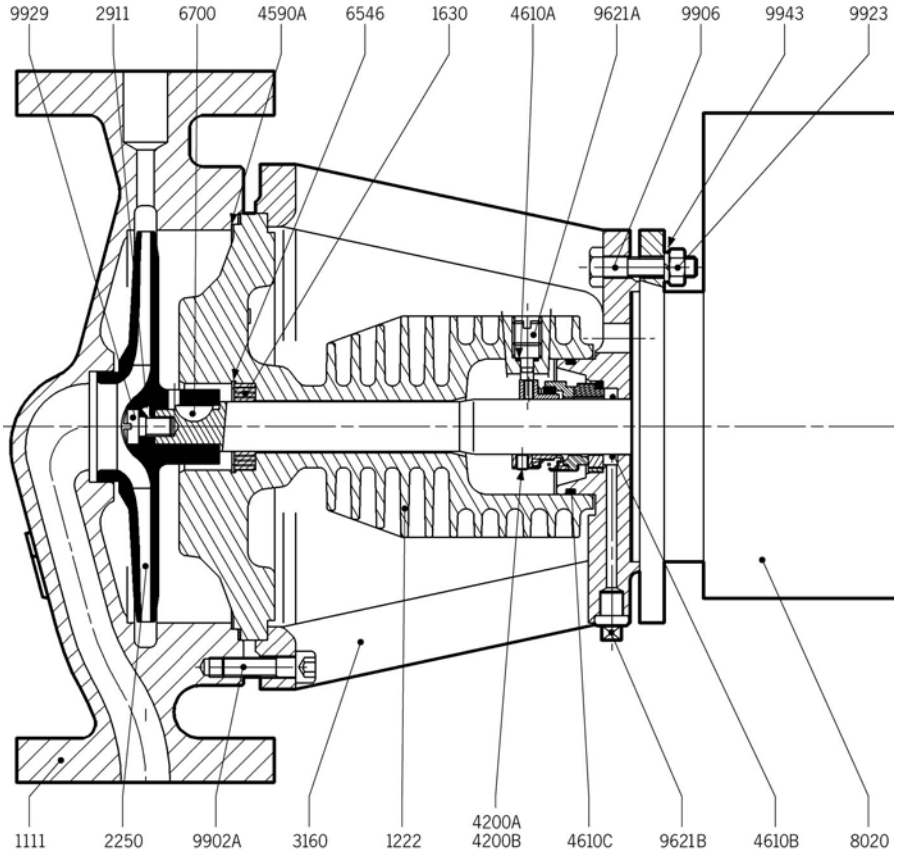

1111 - Pump housing
1222 - Base with seal box
• 1630 - Retaining ring
• 2250 - Closed impeller
2911 - Shaft end washer
3160 - Connecting spacer
• 4200A - Mechanical seal GET E
• 4200B - Mechanical seal GET C
• 4590A - Pump casing gasket
• 4610A - O-ring under bleed screw
• 4610B - Safety O-ring
• 4610C - End-spacer O-ring
• 6546 - Circlip
• 6700 - impeller key
• 8020 - Extended shaft end motor
9621A - Mechanical seal ventilation screw
9621B - Plug
9902A - Screw (end-casing)
9902B - Screw (end-spacer)
9906 - Spacer /motor attachment screw
9923 - Screw nut 9906
• 9929 - impeller nut (self-locking)
9943 - Nut washer

(•) Recommended spare parts

Temperature readings during operation (ambient temperature 25 °C)

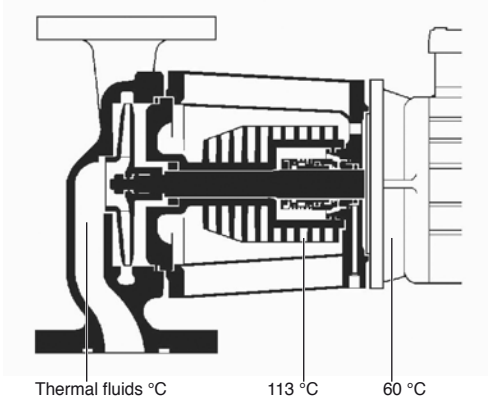

DETAILS

• Base details (1222) with mechanical seal ventilation screw

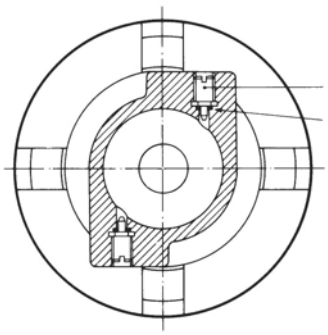

NB
Seal ventilation possible in all pump assembly positions.

• Spacer details (3160) with mechanical seal gland openings

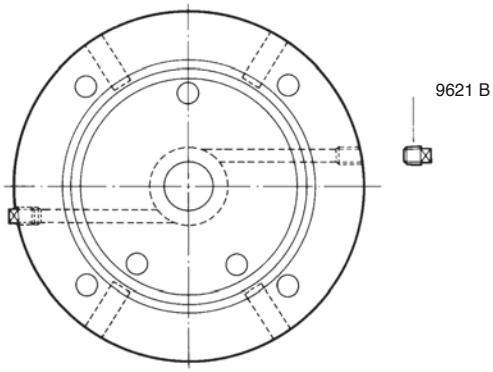

Operating safety.
An opening on the motor side of the spacer identifies any potential leaks caused by the accidental deterioration of the mechanical seal. **One of the openings must always remain open and positioned downwards.**

MECHANICAL SEAL

• Version for superheated water GET-E (4200 A) and thermal fluids GET-C (4200 B)

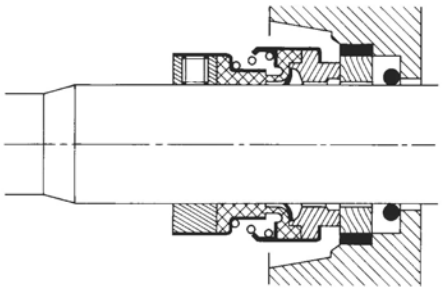

ASSEMBLY POSITIONS

(assembly on heating generator return)

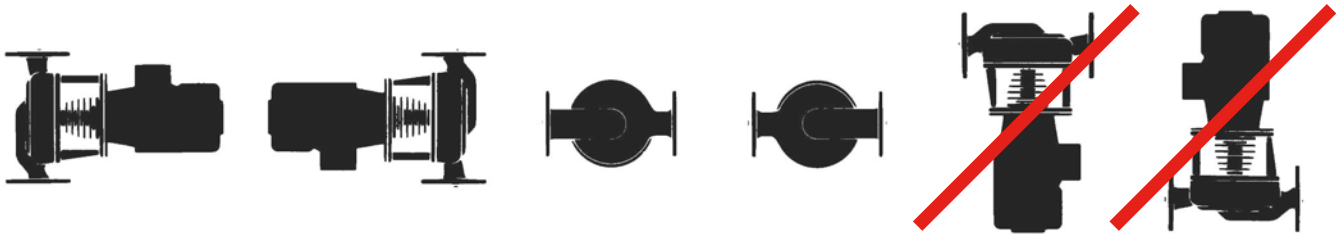

GET

GENERAL PRESELECTION CHART - 2 POLES - 50HZ

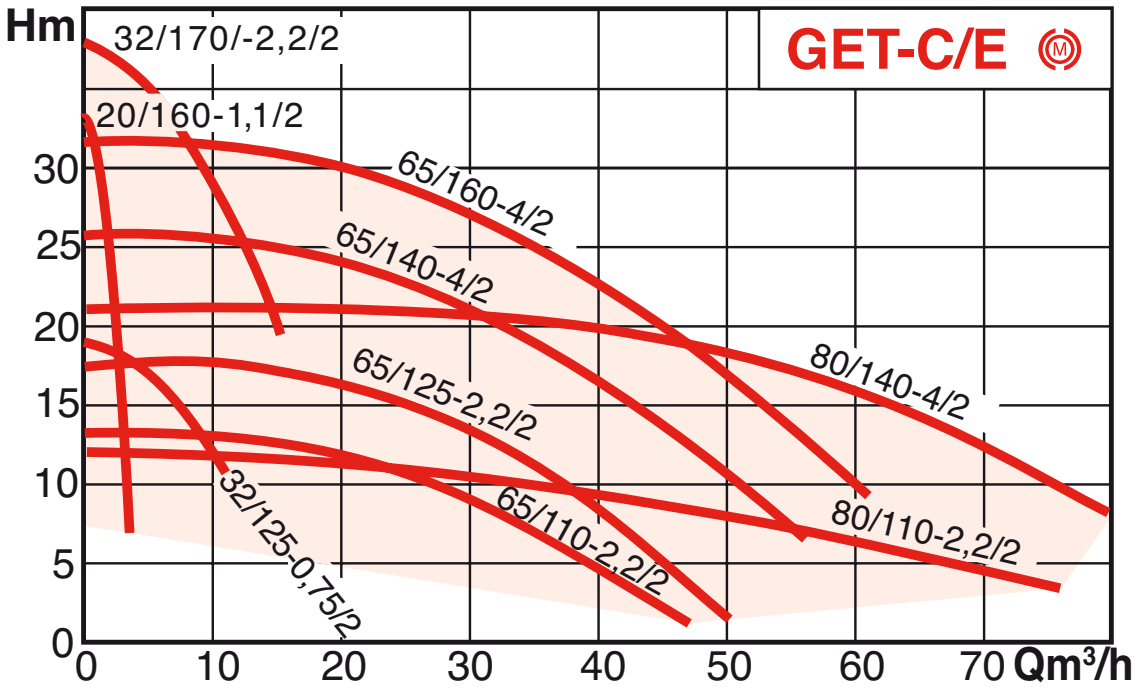

GENERAL PRESELECTION CHART - 4 POLES - 50HZ

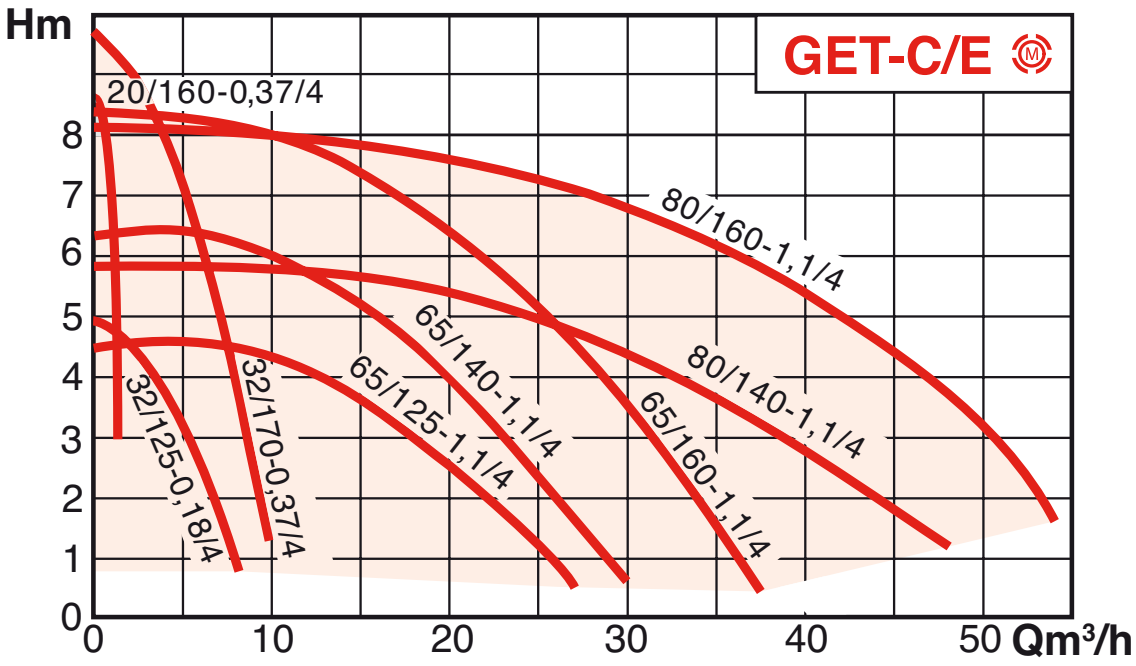

HYDRAULIC PERFORMANCES AT 2 900 RPM - 2 POLES

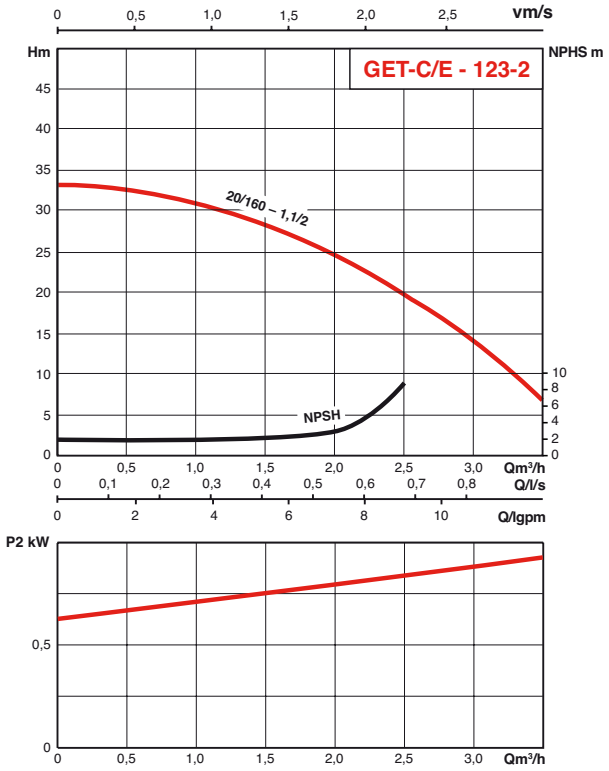

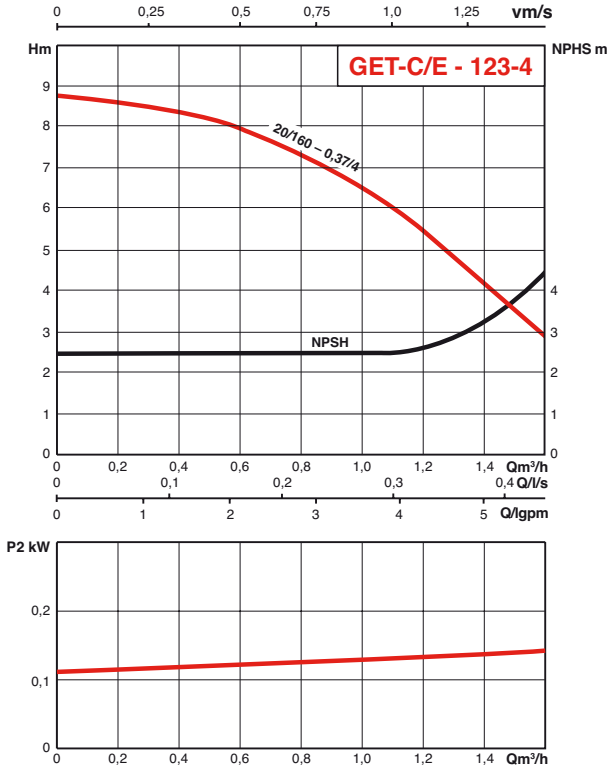

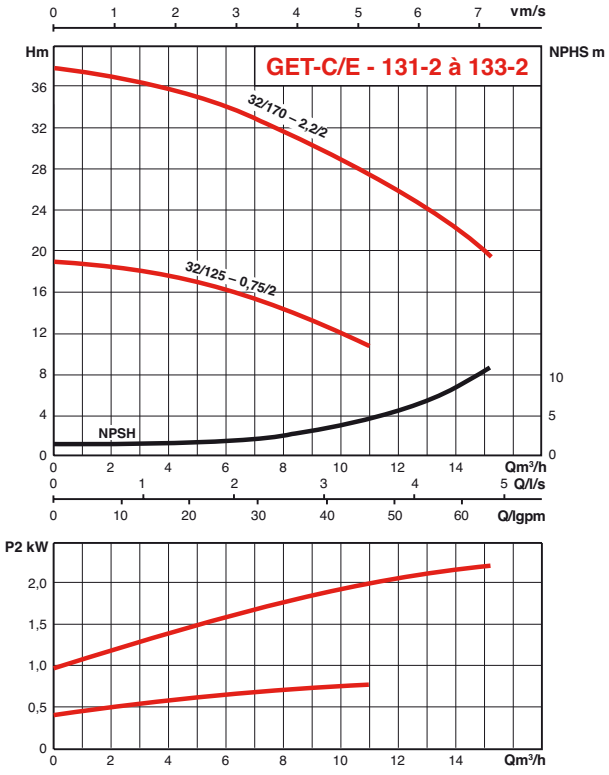

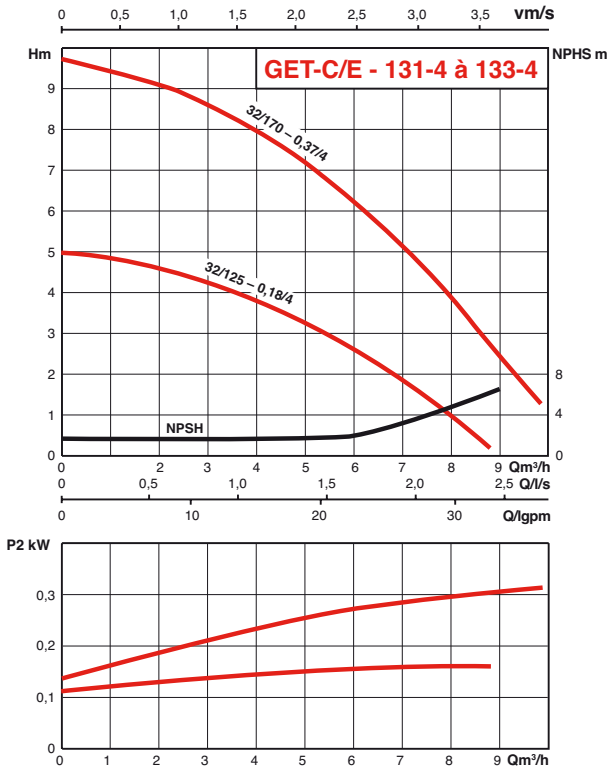

GET

HYDRAULIC PERFORMANCES AT 1450 RPM - 4 POLES

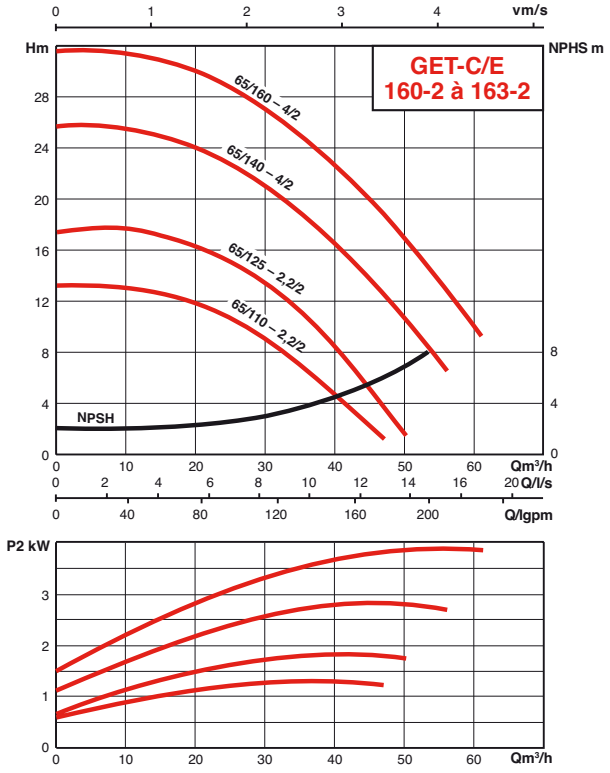

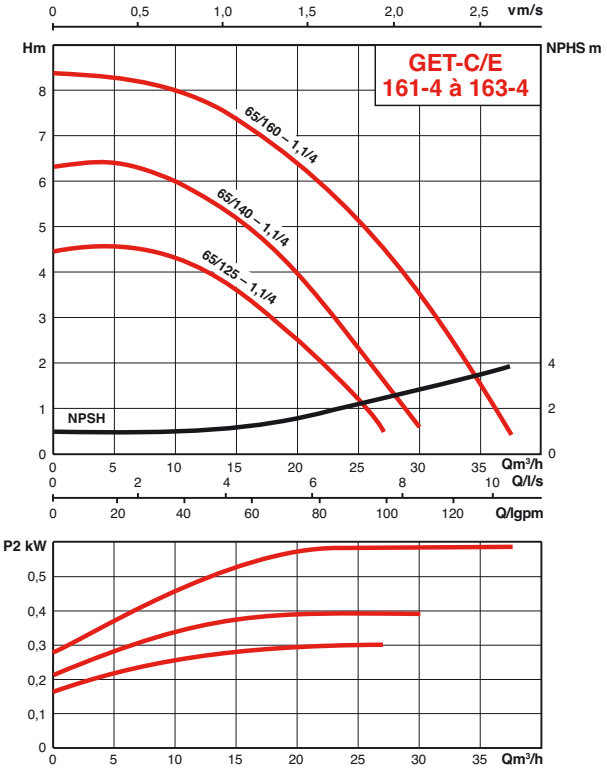

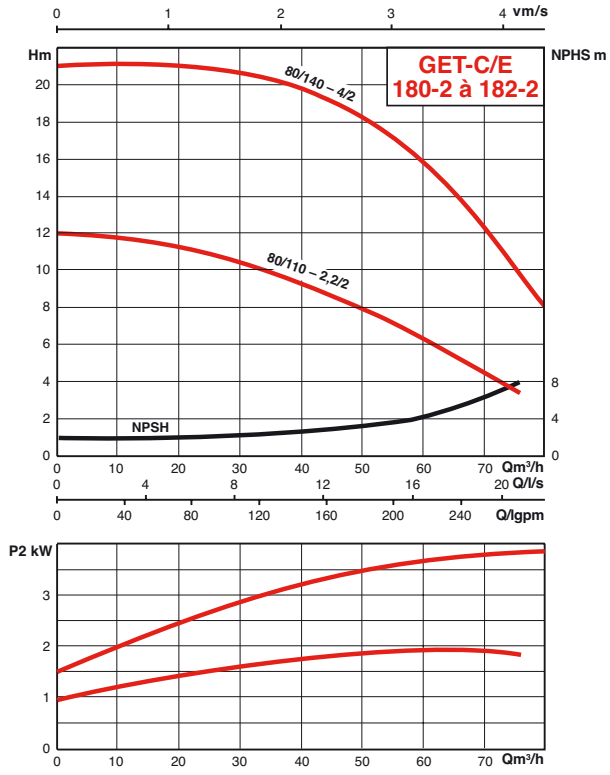

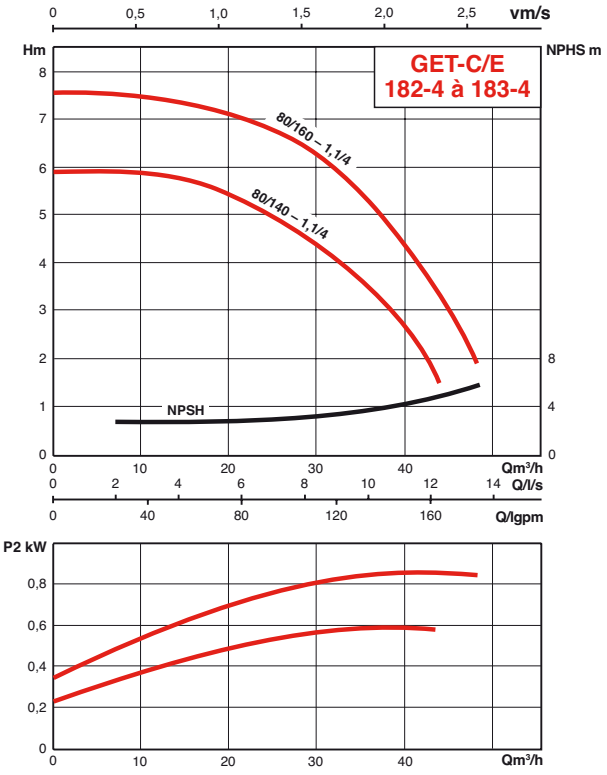

ELECTRICAL AND DIMENSIONAL CHARACTERISTICS

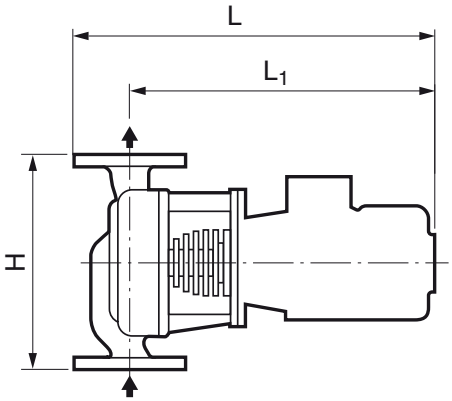

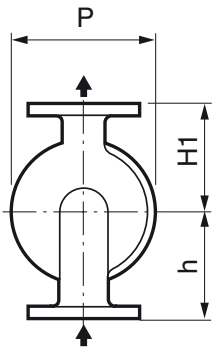

Brides asp. réf. (DEF)
PN25

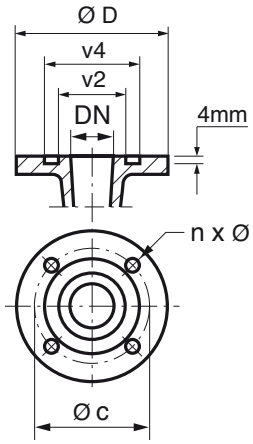

FEATURES

a) Electrical

- All three-phase types 230-400 V - 50 Hz.
- Motor protection with circuit breaker essential.

b) Assembly

- Directly on pipe system.
- Motor axis always horizontal.

Connection to the system:

- Circular welded CB with double male joints (DEM).

c) Packaging

- Delivered with CB-DEM, gaskets and bolts.

d) Maintenance

- Repairs: see recommended spare parts (•) subject to wear and tear.

RECOMMENDED ACCESSORIES

- Motor protection circuit breaker.
- Shut-off valves.
- Non-return valve…

ORDER REFERENCE	motour				nominal intensity under (A)		H	L max.	P	L1	h	H1	nominal Ø of openings	flanges according to NFE 29203 (DEF - PN 25)			v2	v4	mass	delivered with CB-DEM for tube Ø
	P2	Output	Power factor	speed										D	c	holes				
	kW		Cos ϕ	rpm	3~230 V	3~400 V	mm	mm	mm	mm	mm	mm	DN	mm	mm	n x Ø	mm	mm	kg	
GET-C ou E-123-2	1,1	80.6	0.856	2900	4.5	2.3	290	417	210	432	145	145	20	105	75	4 x 14	35	51	33	20-27
GET-C ou E-123-4	0,37	72	0,7	1450	2,2	1,12	290	385	210	472	145	145	20	105	75	4 x 14	35	51	36,5	20-27
GET-C ou E-131-2	0,75	78.2	0.864	2900	3,3	1,6	260	402	177	447	130	130	32	140	100	4 x 18	50	66	26	33-42
GET-C ou E-131-4	0,18	62	0,65	1450	1,2	0,62	260	370	177	417	130	130	32	140	100	4 x 18	50	66	31,5	33-42
GET-C ou E-133-2	2,2	81.5	0.88	2900	7,62	4,4	260	477	225	447	130	130	32	140	100	4 x 18	50	66	42	33-42
GET-C ou E-133-4	0,37	72	0,7	1450	2,2	1,12	260	395	225	410	130	130	32	140	100	4 x 18	50	66	38	33-42
GET-C ou E-160-2	2,2	81.5	0.88	2900	7.62	4.4	370	467	220	502	200	170	65	185	145	8 x 18	94	110	44	66-76
GET-C ou E-161-2	2,2	81.5	0.88	2900	7.62	4.4	370	467	220	502	200	170	65	185	145	8 x 18	94	110	44	66-76
GET-C ou E-161-4	1,1	82.5	0.813	1450	4.7	2.4	370	447	220	472	200	170	65	185	145	8 x 18	94	110	44	66-76
GET-C ou E-162-2	4	86.2	0.838	2900	14.2	8	400	528	228	516	210	190	65	185	145	8 x 18	94	110	72	66-76
GET-C ou E-162-4	1,1	82.5	0.813	1450	4.7	2.4	400	447	228	472	210	190	65	185	145	8 x 18	94	110	44	66-76
GET-C ou E-163-2	4	86.2	0.838	2900	14.2	8	400	528	228	516	210	190	65	185	145	8 x 18	94	110	72	66-76
GET-C ou E-163-4	1,1	82.5	0.813	1450	4.7	2.4	400	447	228	472	210	190	65	185	145	8 x 18	94	110	44	66-76
GET-C ou E-180-2	2,2	81.5	0.88	2900	7.62	4.4	400	472	239	502	210	190	80	200	160	8 x 18	105	121	52	82-89
GET-C ou E-182-2	4	86.2	0.838	2900	14.2	8	430	532	273	516	225	205	80	200	160	8 x 18	105	121	80	82-89
GET-C ou E-182-4	1,1	82.5	0.813	1450	4.7	2.4	430	452	273	472	225	205	80	200	160	8 x 18	105	121	46	82-89
GET-C ou E-183-4	1,1	82.5	0.813	1450	4.7	2.4	430	452	273	472	225	205	80	200	160	8 x 18	105	121	59	82-89

GET

NOTES

RANGE OF USE

Flow rate up to:	**375 m³/h**
Mano. head up to:	**105 m**
Max. operating pressure:	
	13 bar up to +140°C
	16 bar up to +120°C
Frequency range:	**–20° to +140°C**
Opening DN:	**25 to 125**
Reference of MEI*:	**≥ 0,10**

*Minimum Efficiency Index

PBS

STANDARDISED HORIZONTAL MONOBLOC PUMPS

Heating – Air conditioning
Adduction – over pressure
50 Hz

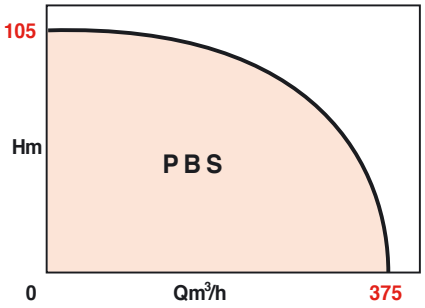

APPLICATIONS

- Hot water circulation according to VDI2035 or cold water circulation
- Glycol or cold water circuits up to 40% of glycol and temperature of 40°C
- Cooling water circuits
- Irrigation, washing
- Drain, filling, overpressure
- All industries involved in the pumping of clear, non-abrasive, chemically neutral liquids.

ADVANTAGES

- **High hydraulic output**
- **Low electrical consumption**
- **Reduced space requirement**
- **Low sound level**
- **No risk of pump/motor misalignment**

Certified ACS

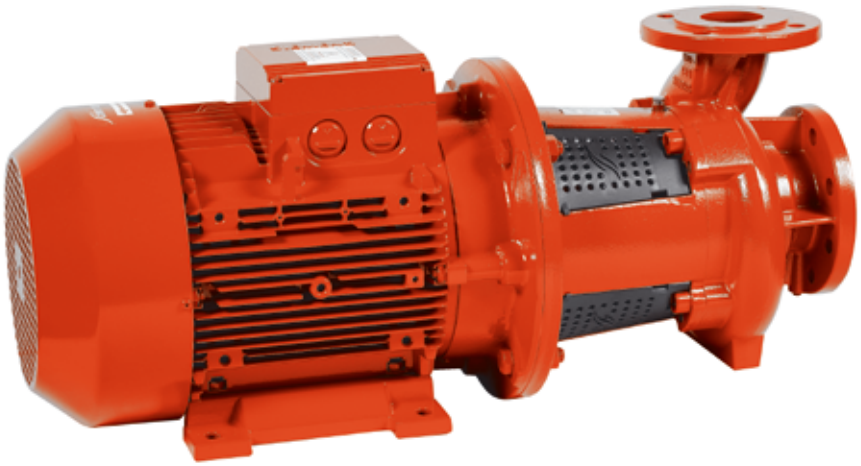

PBS

BASIC CONSTRUCTION

• Hydraulic section

- Single stage centrifugal pump
- Flange housing, axial suction and vertical discharge
- Flanges equipped with pressure intake openings
- Sealed with standardised mechanical seals
- Housing dimensions according to EN 733 (DIN-24255)

• Lantern

Equipped with condensate collection holes in vertical and horizontal position

• Motor

High output IE2

Standardised flanges coupled with pump with rigid coupling

Speed:	2 pole: 2900 rpm. 4 pole: 1450 rpm.
3 ~ winding ≤ 3 kW:	230 V Δ 50 Hz 400 V Y 50 Hz
3 ~ winding ≥ 4 kW:	400 V Δ 50 Hz
Insulation:	155 (F)
Protection index:	IP55
CE conformity:	EN 809

Options ipsothermal protection, 60 Hz… (contact us).

BASIC STRUCTURE

Main parts	Material
Pump housing	Cast iron EN GJL 250 * EN GJS 400-18-LT
Impeller	Cast iron EN GJL 200
	Bronze*
Lantern	Cast iron EN GJL 250
Shaft	Steel X39 Cr Mo 17.1
Mechanical seal**	Graphite/Carbide Si/EP

* Options, contact us
** Please consult us for other mechanical seals

IDENTIFICATION

PBS 50 - 170/7,5/2/15

- Monobloc unit
- Ø discharge opening
- Max Ø of impeller (mm)
- Motor power (kW)
- 2 pole: 2900 rpm
  4 pole: 1450 rpm
- Nominal Ø of impeller (cm)

REPRESENTATIVE CROSS-SECTION

1. Complete spare kit
   1.1 Set of spare parts with
   1.11 Nut
   1.12 Washer
   1.13 Impeller
   1.14 O-ring
   1.2 Set of mechanical seal spare parts with
   1.21 Complete mechanical seal
1.3 Set of spare lantern parts with
1.31 Bleeder screw
1.32 Coupling protector
1.33 Lantern
1.4 Set of shaft spare parts with
1.41 Shaft
1.42 Spring retaining ring
1.5 Complete coupling
2. Motor

3. Complete pump housing with
   3.1 Pump housing
   3.2 Plug for pressure openings

4. Attachment screw for lantern/pump

5. Attachment screw for motor/lantern
6. Nut for motor/lantern attachment

7. Washer for motor/lantern attachment

8. Adapter ring

9. Pump stand for motor ≤ 4kW
   Support for motor ≥ 5,5 kW

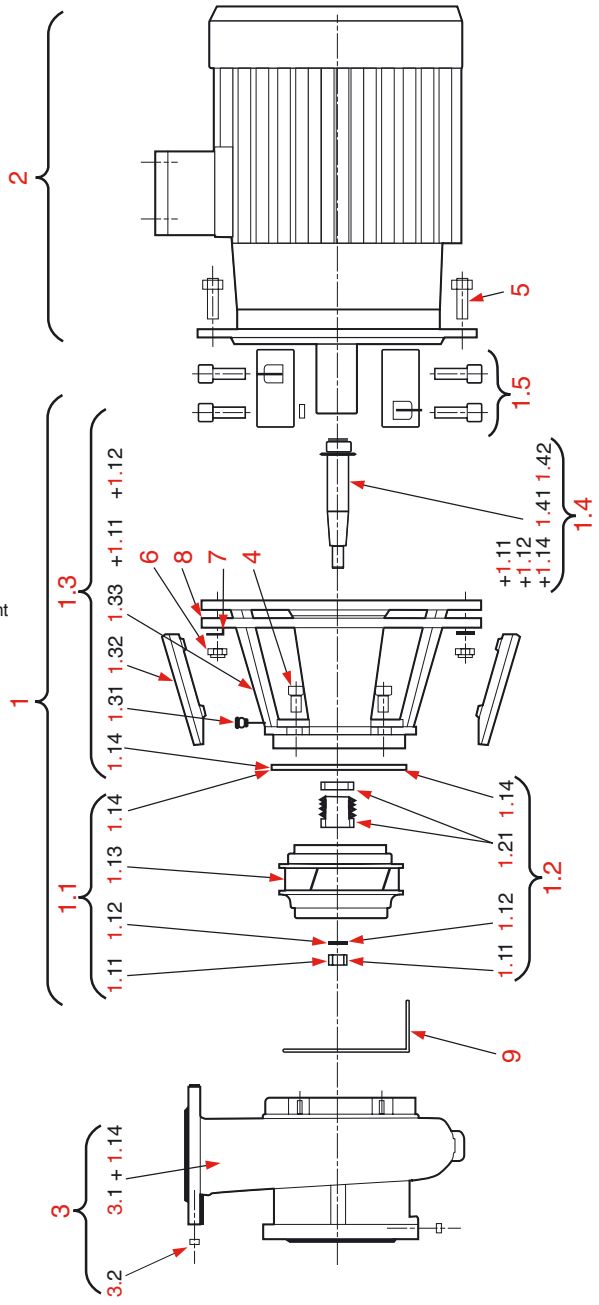

CONNECTION DIAGRAM

Solid line: Y
Dotted line: Δ

P2 ≤ 3 kW	3 ~ 400 V = Y
	3 ~ 230 V = Δ
P2 ≥ 4 kW	3 ~ 400 V = Δ

For activation star – triangle, remove slides

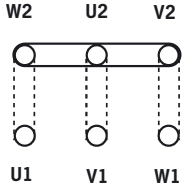

GENERAL PRESELECTION NOMOGRAM 4 POLE

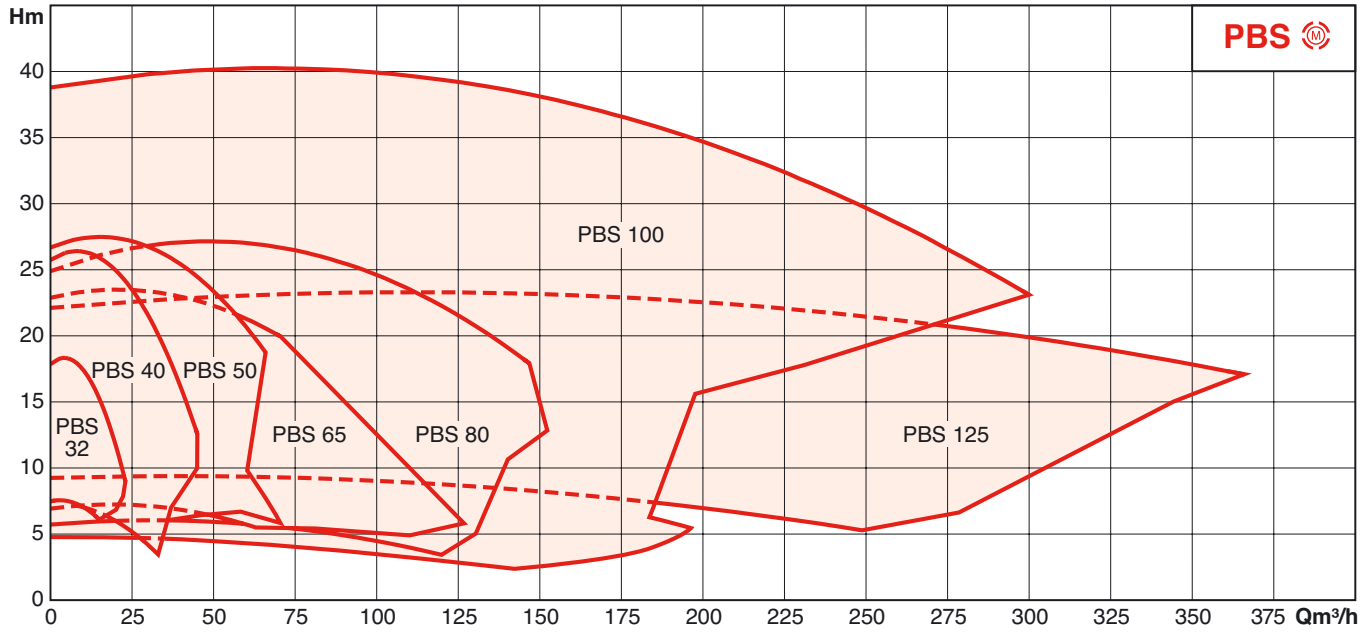

PBS

GENERAL PRESELECTION NOMOGRAM 2 POLE

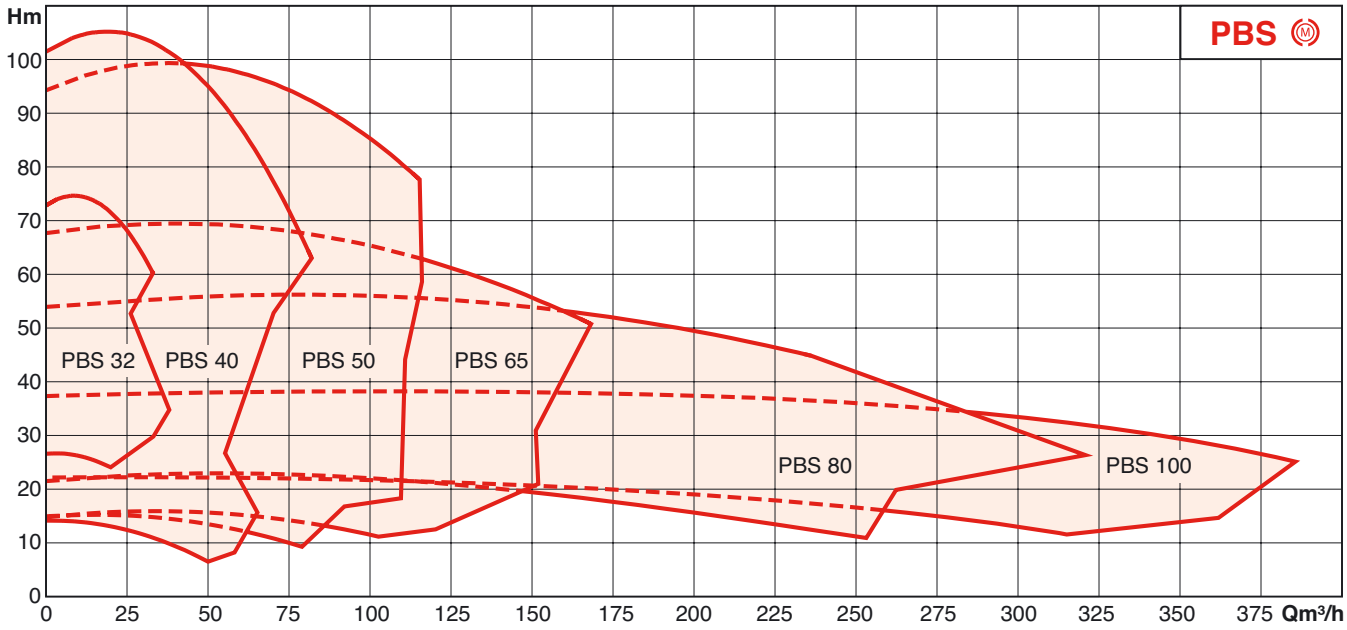

HYDRAULIC PERFORMANCES – 4 POLE

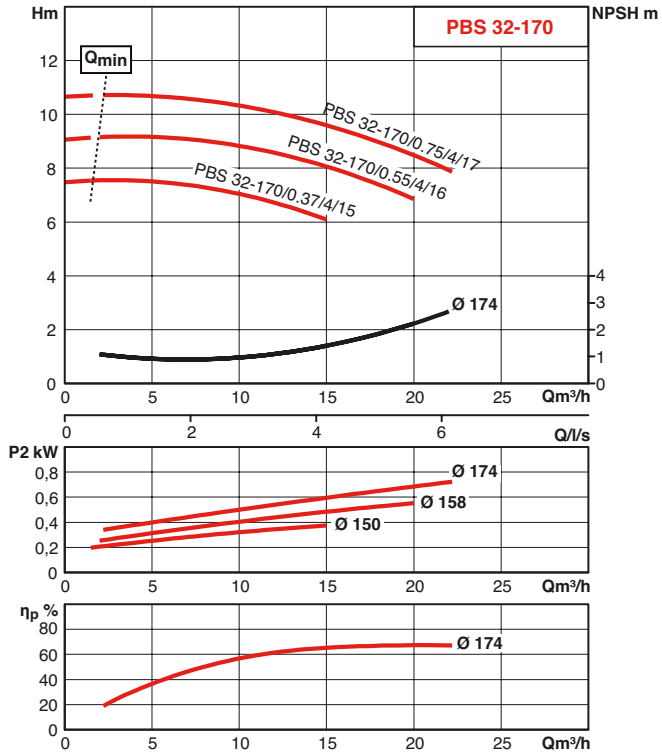

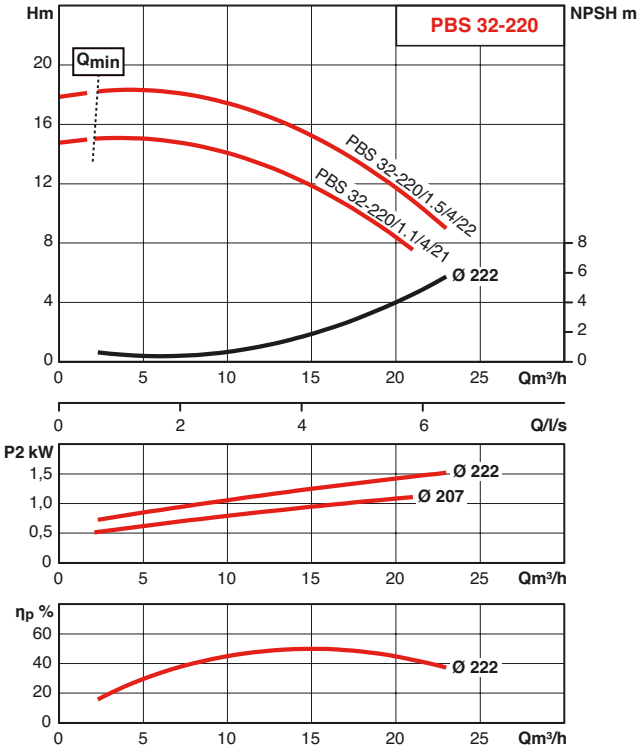

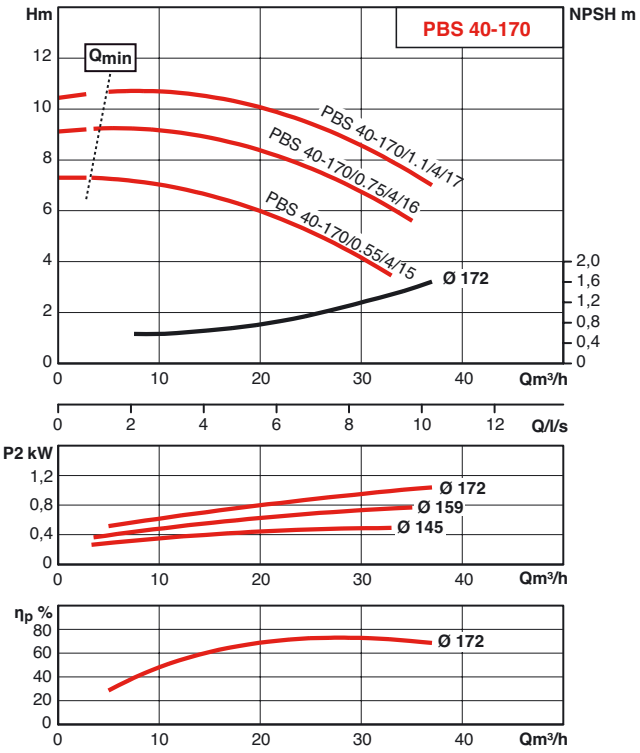

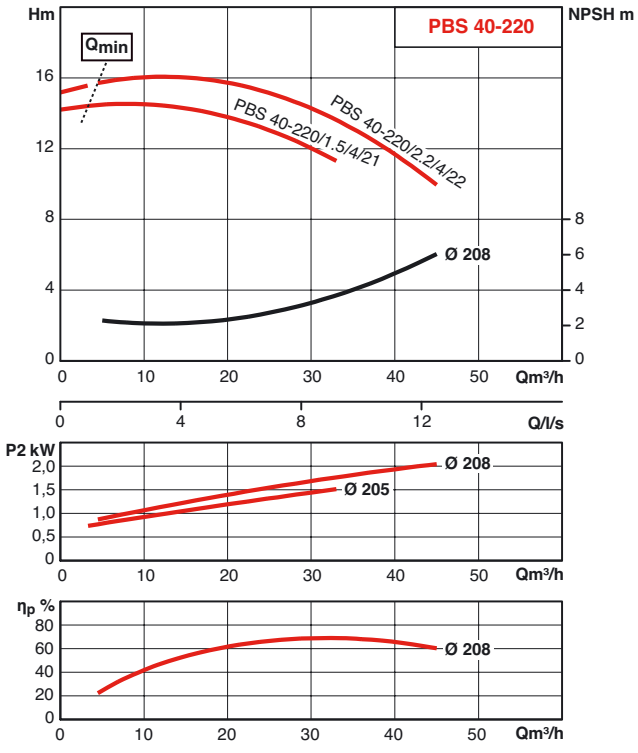

PBS

HYDRAULIC PERFORMANCES – 4 POLE

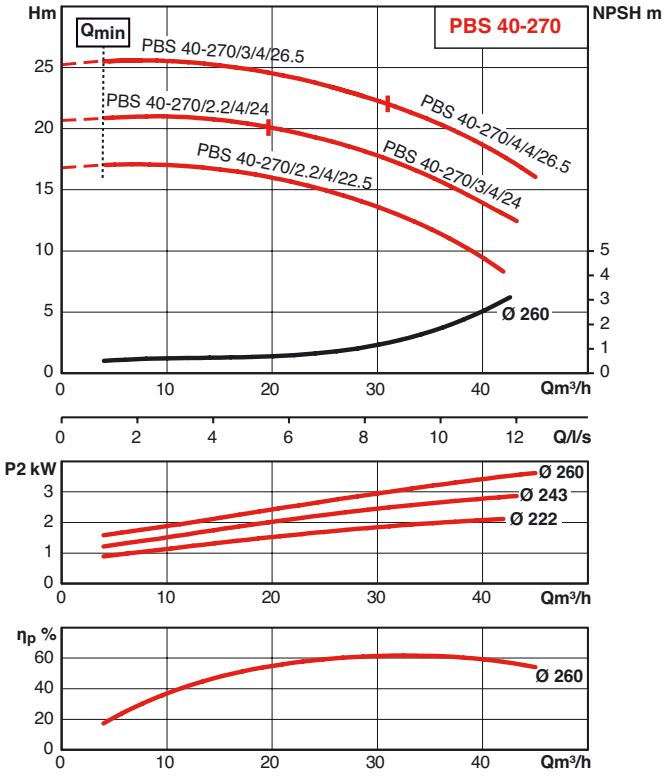

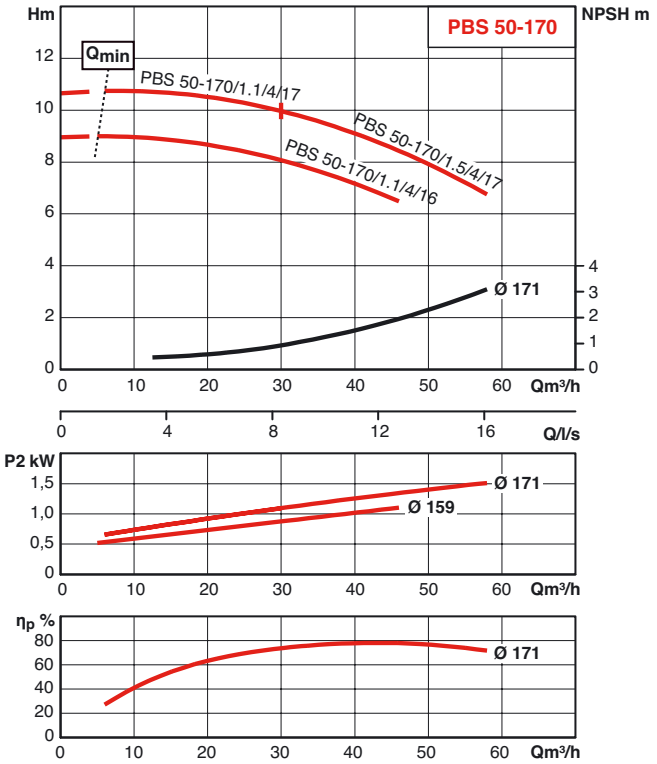

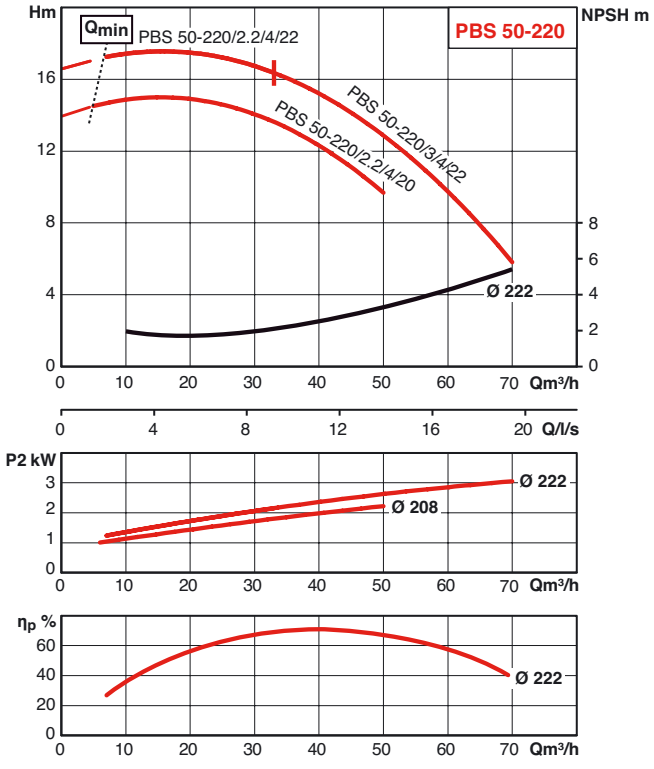

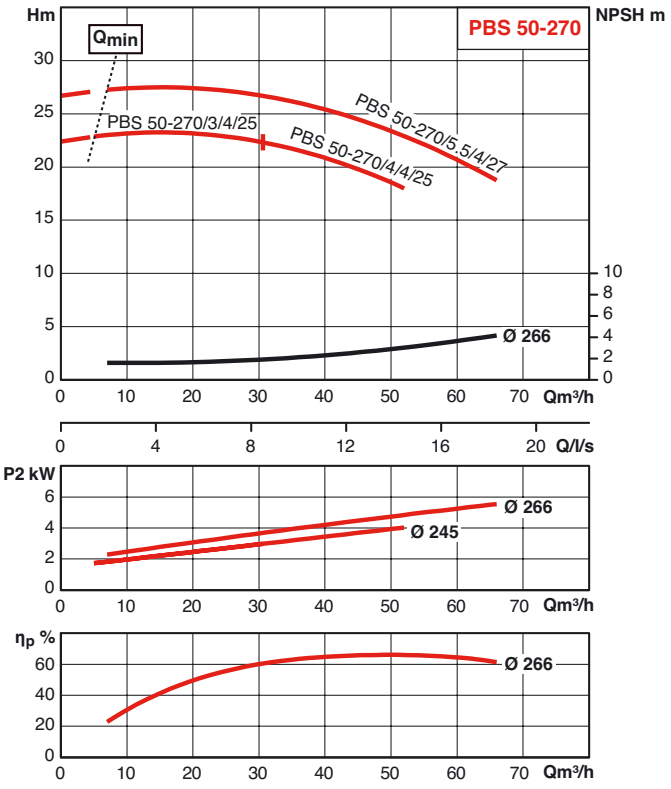

HYDRAULIC PERFORMANCES – 4 POLE

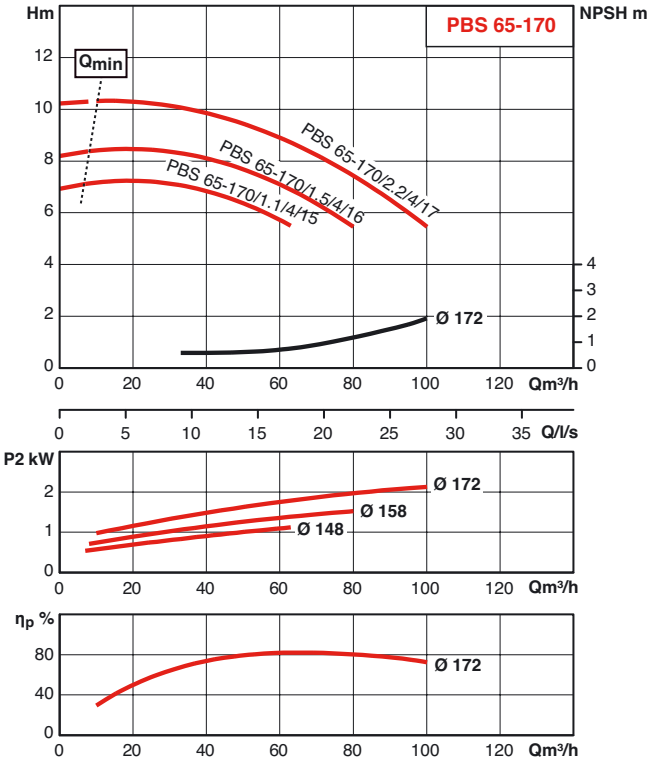

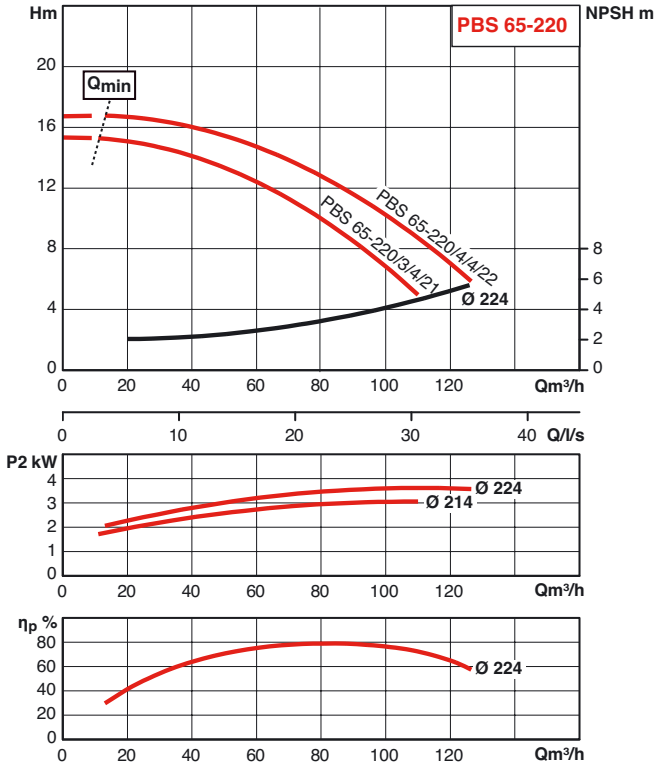

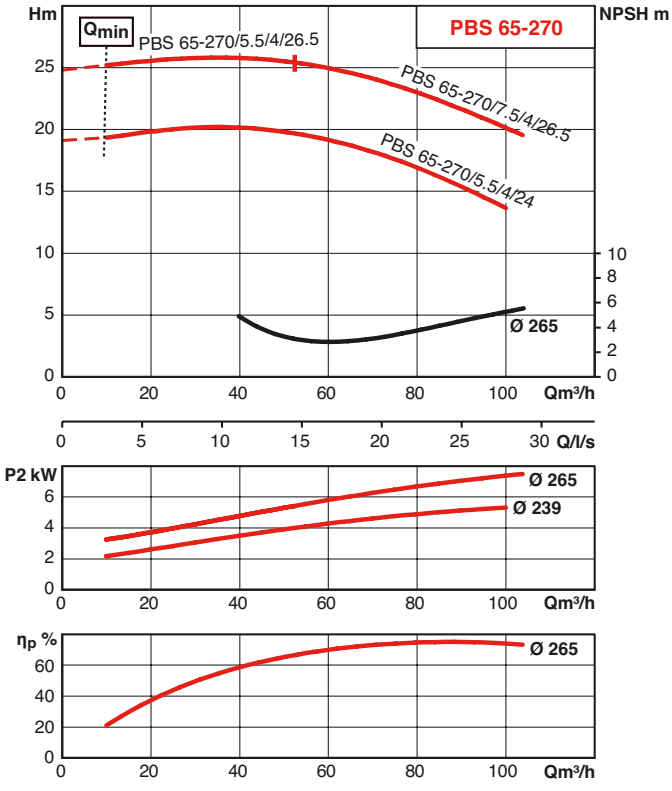

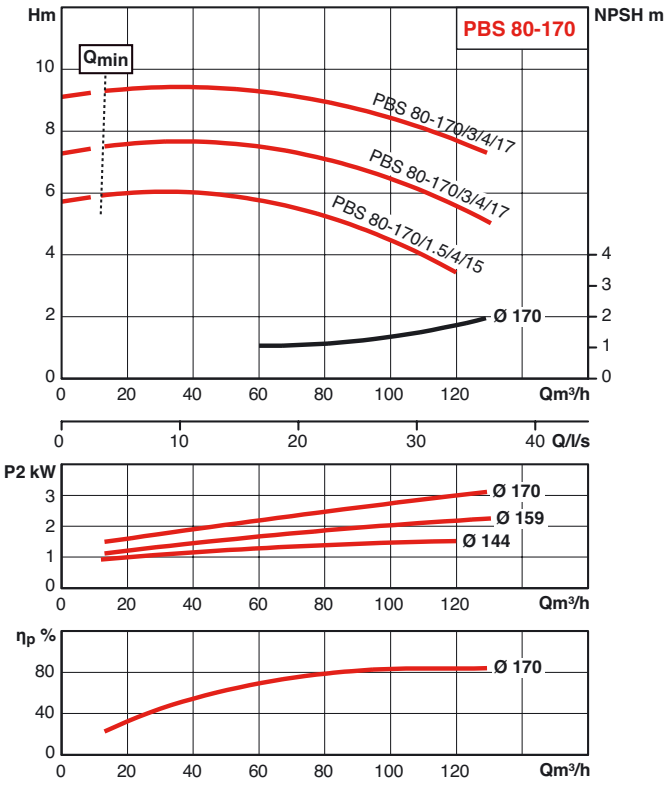

PBS

HYDRAULIC PERFORMANCES – 4 POLE

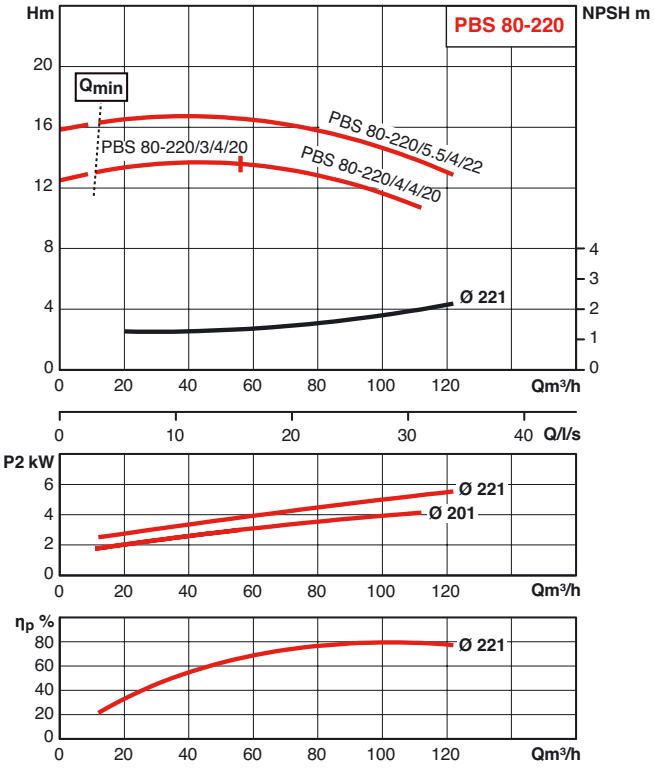

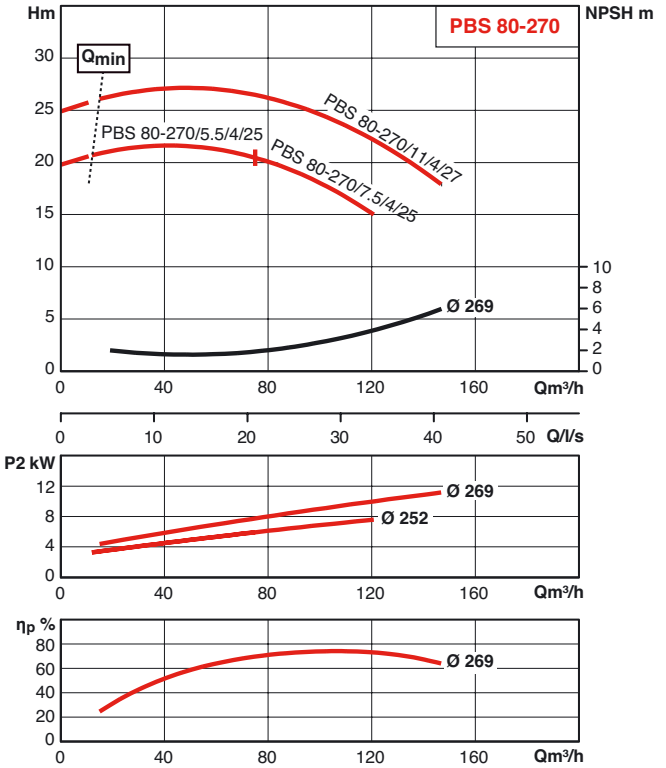

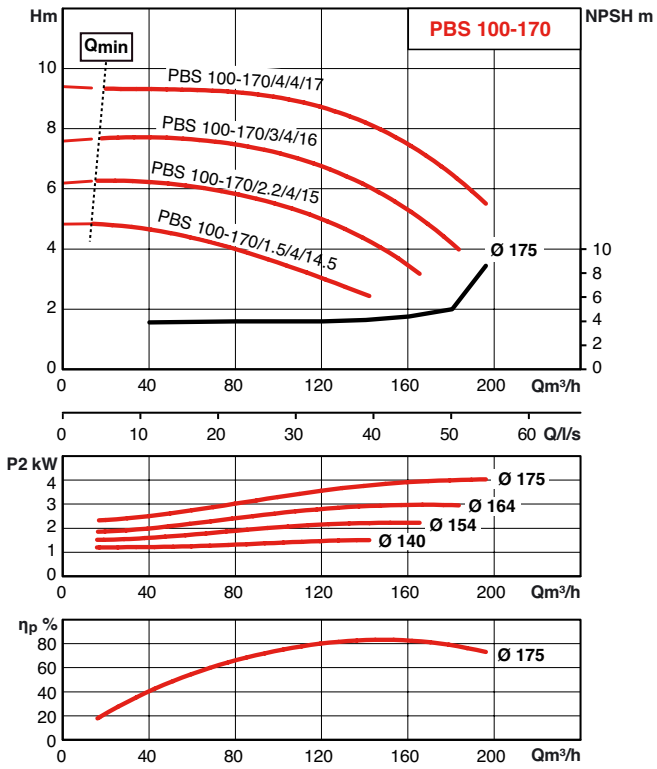

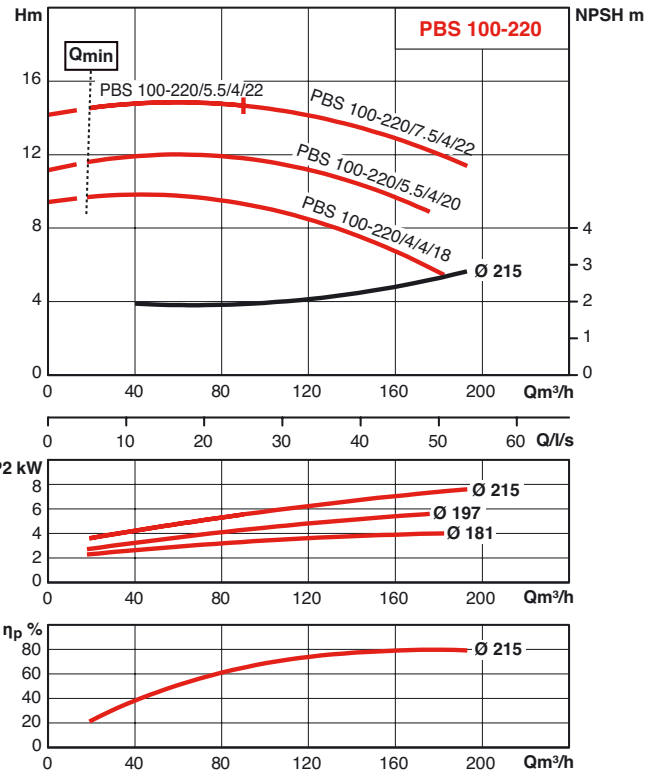

HYDRAULIC PERFORMANCES – 4 POLE

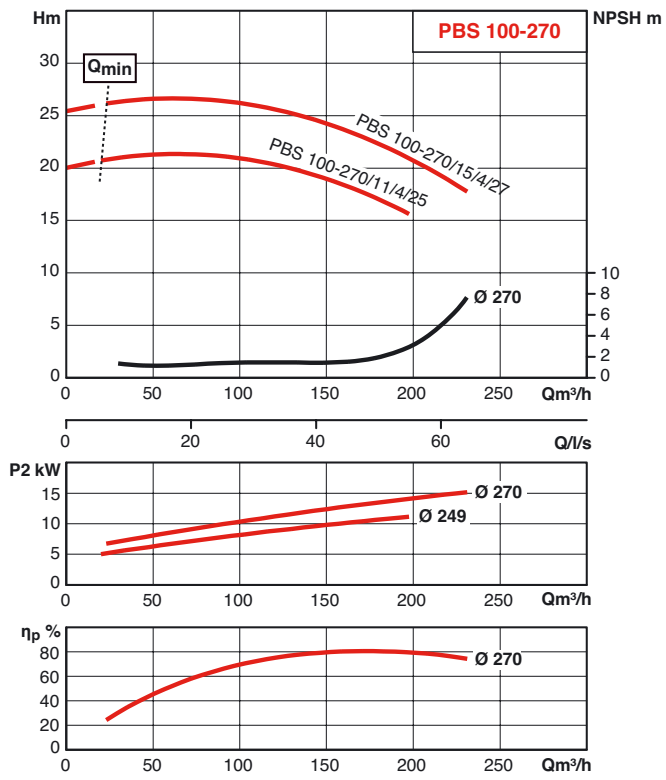

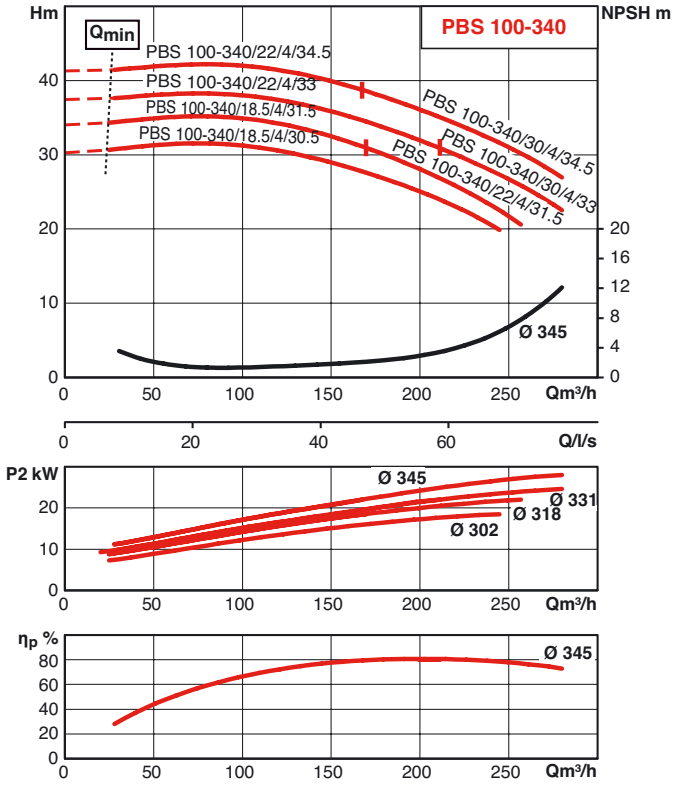

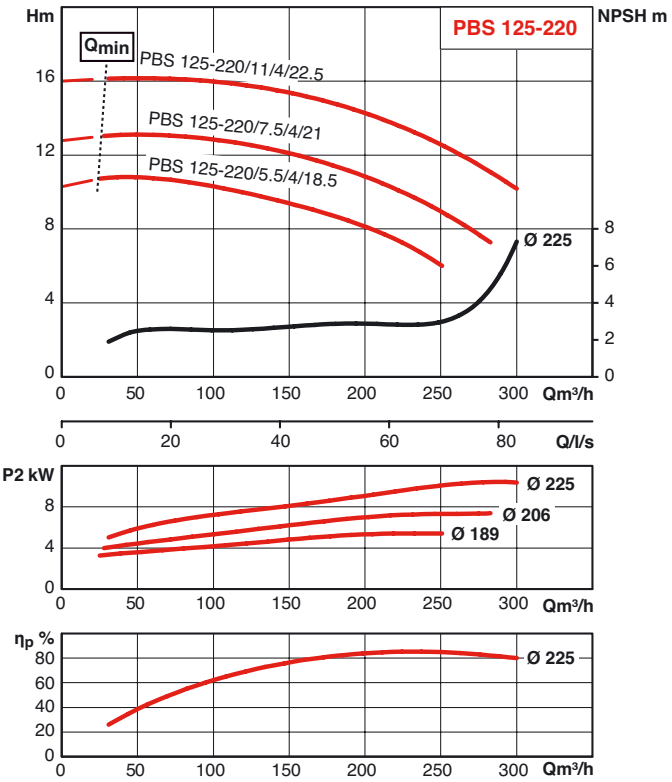

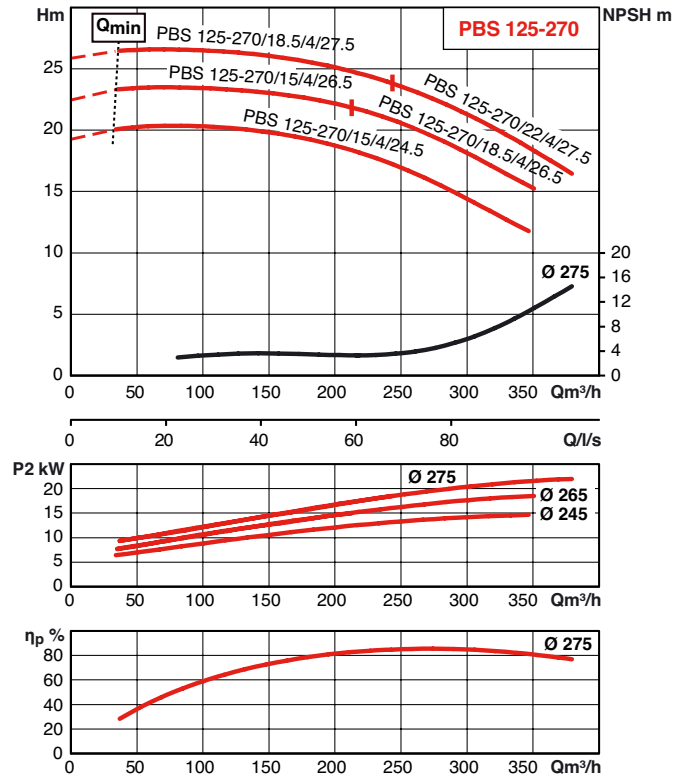

PBS

HYDRAULIC PERFORMANCES – 2 POLE

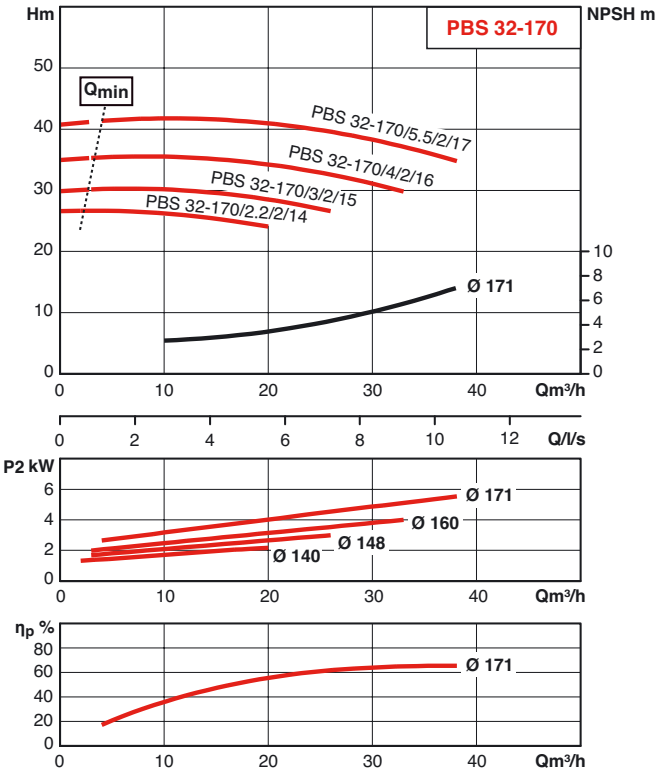

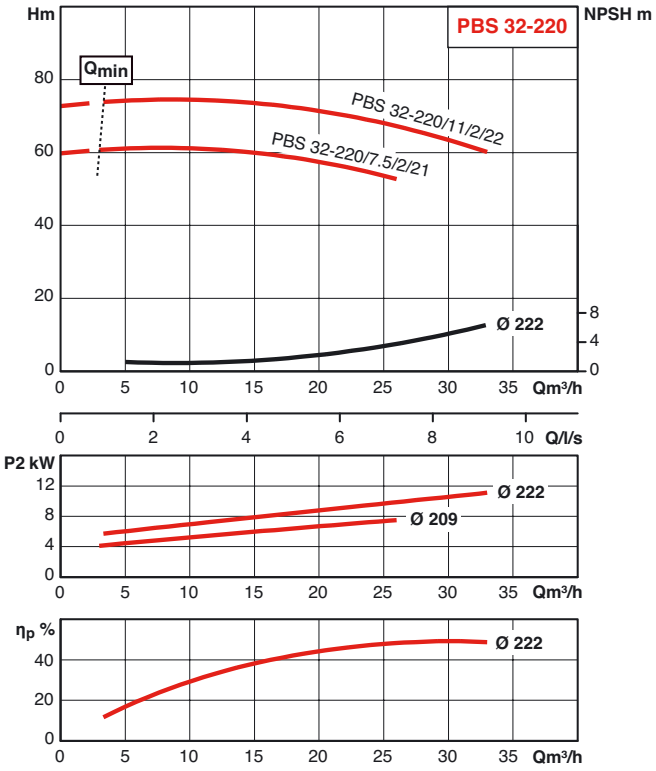

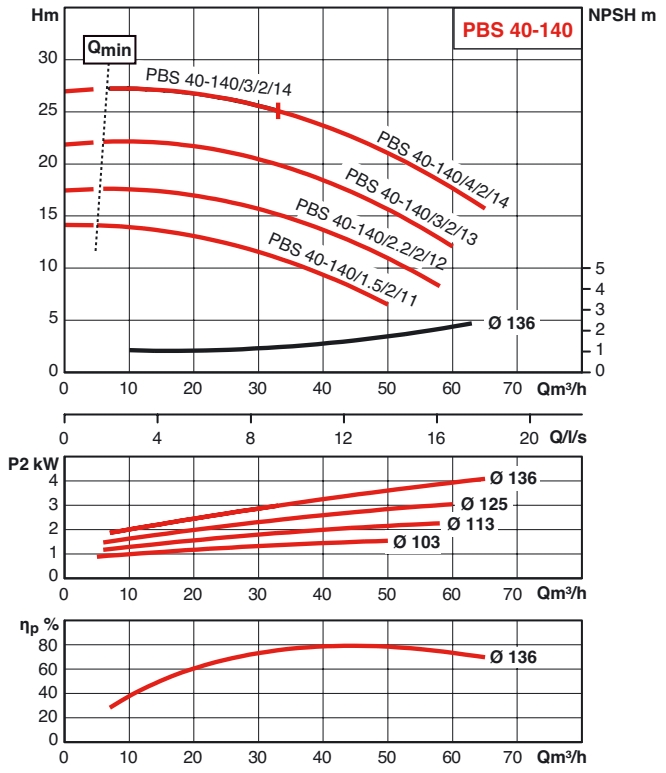

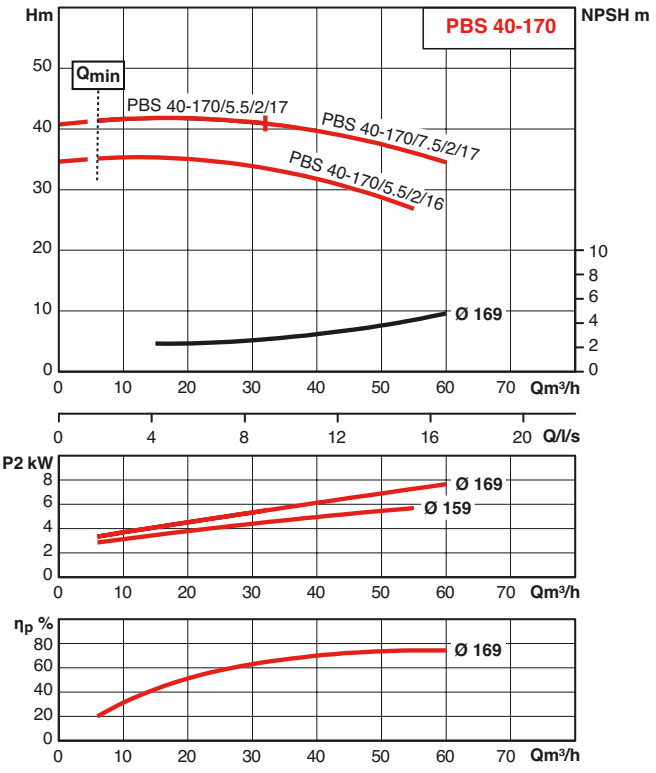

HYDRAULIC PERFORMANCES – 2 POLE

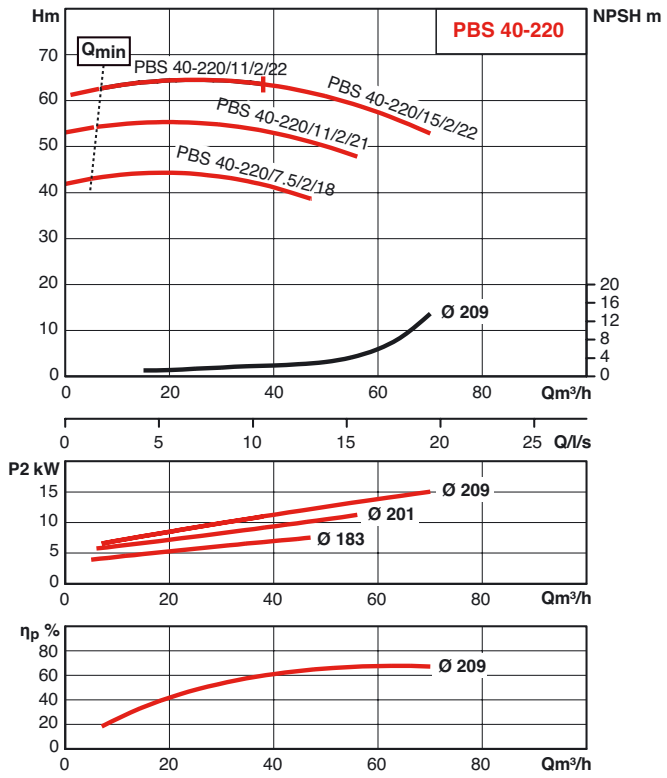

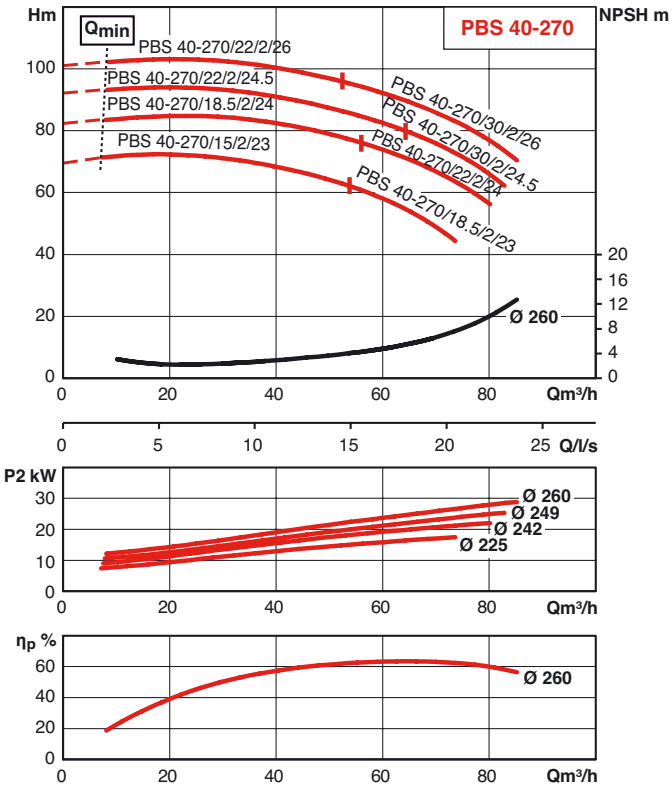

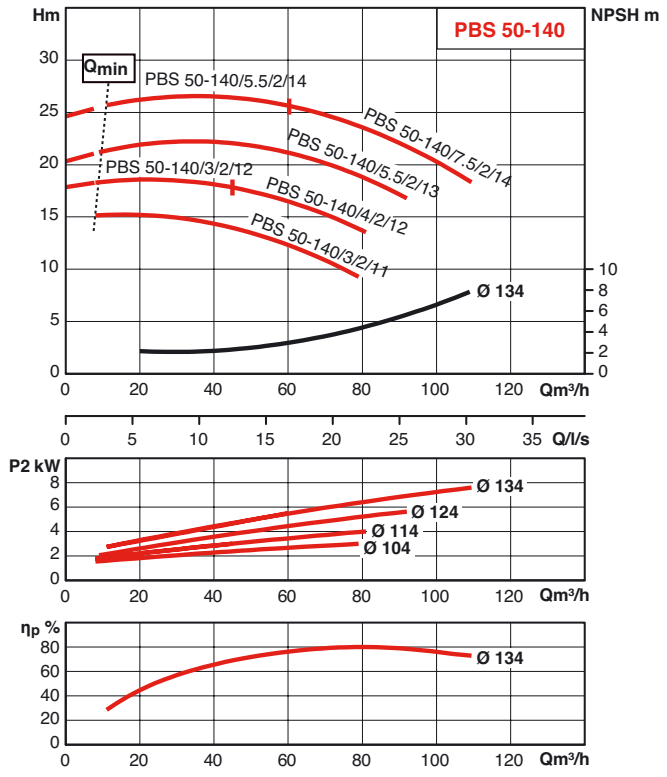

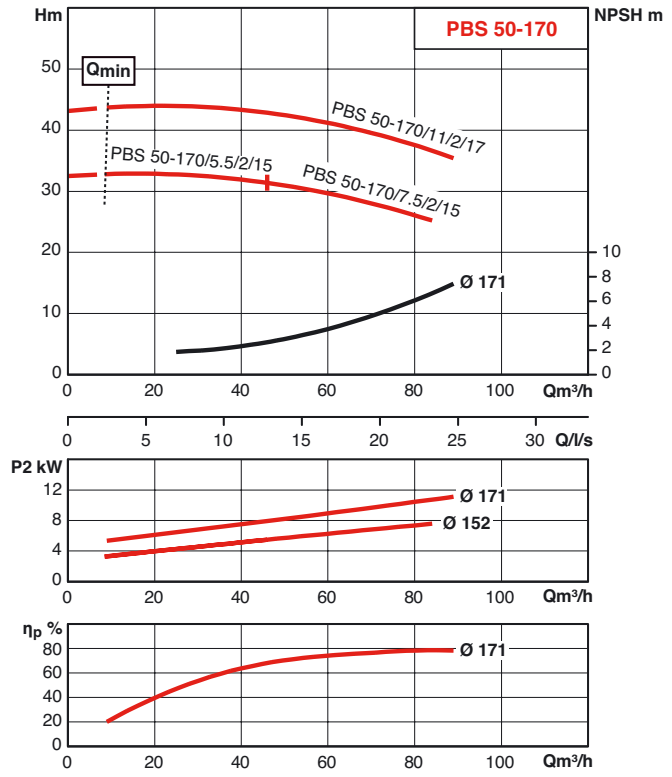

PBS

HYDRAULIC PERFORMANCES – 2 POLE

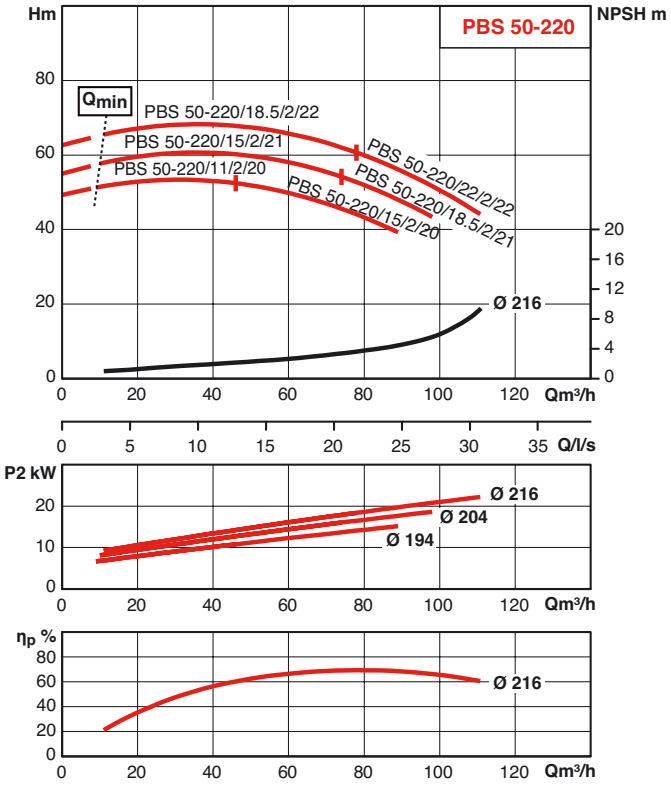

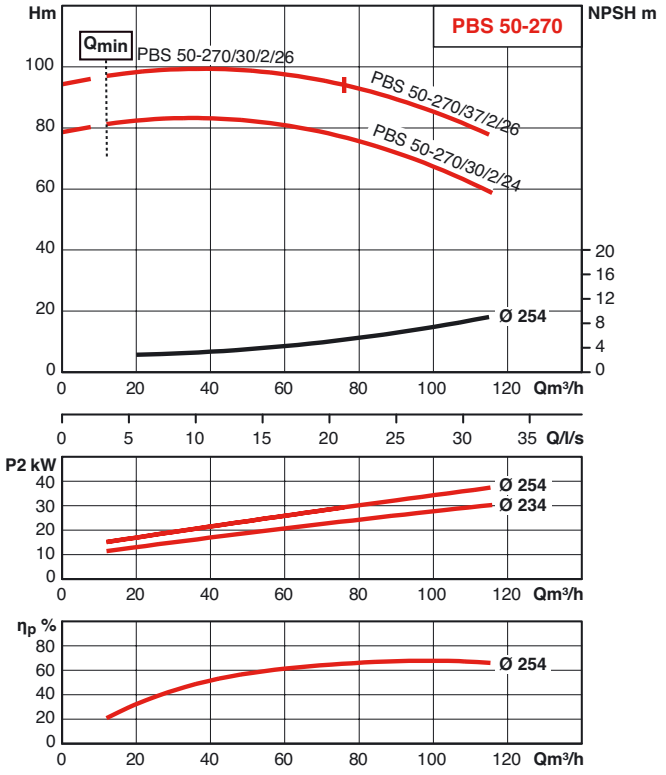

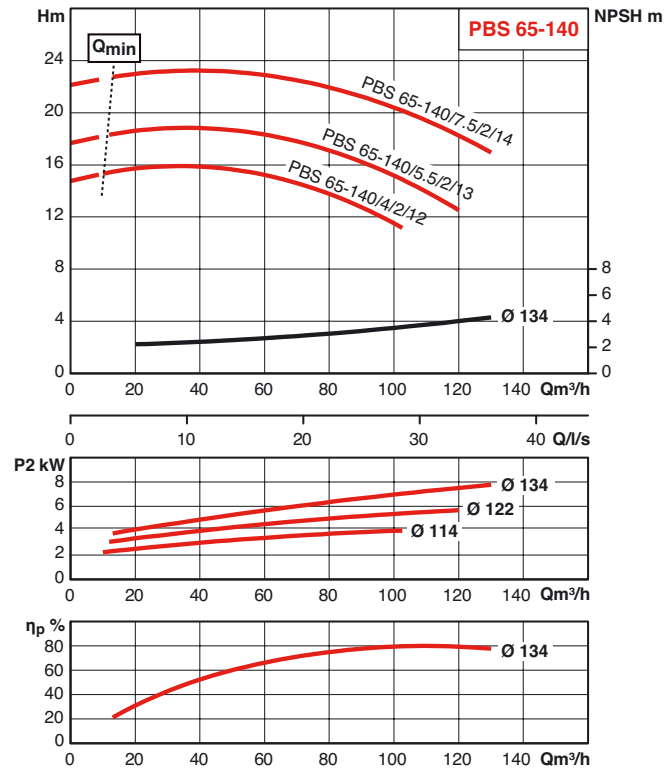

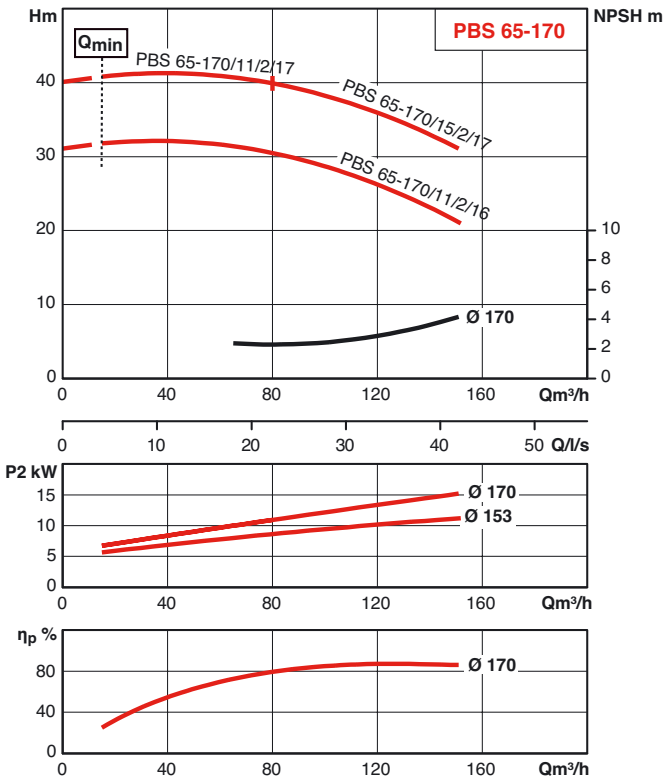

HYDRAULIC PERFORMANCES – 2 POLE

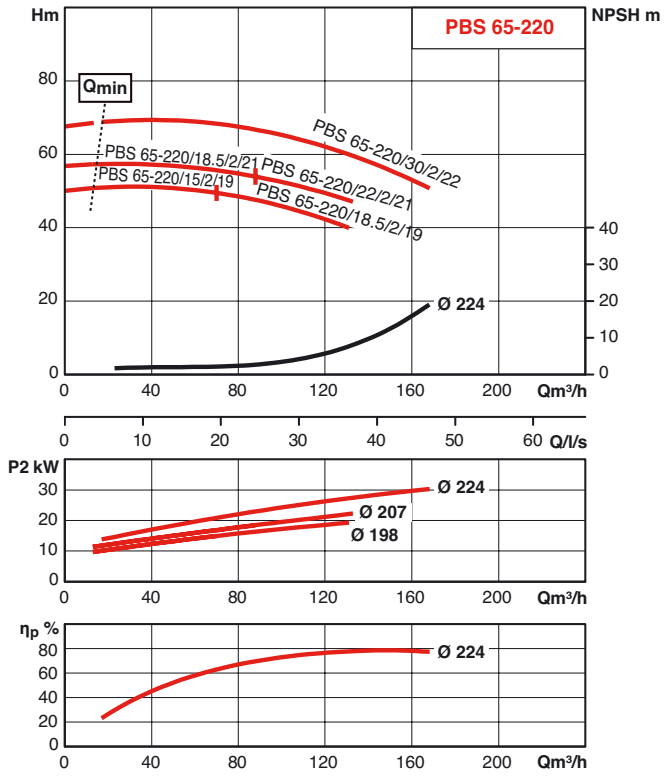

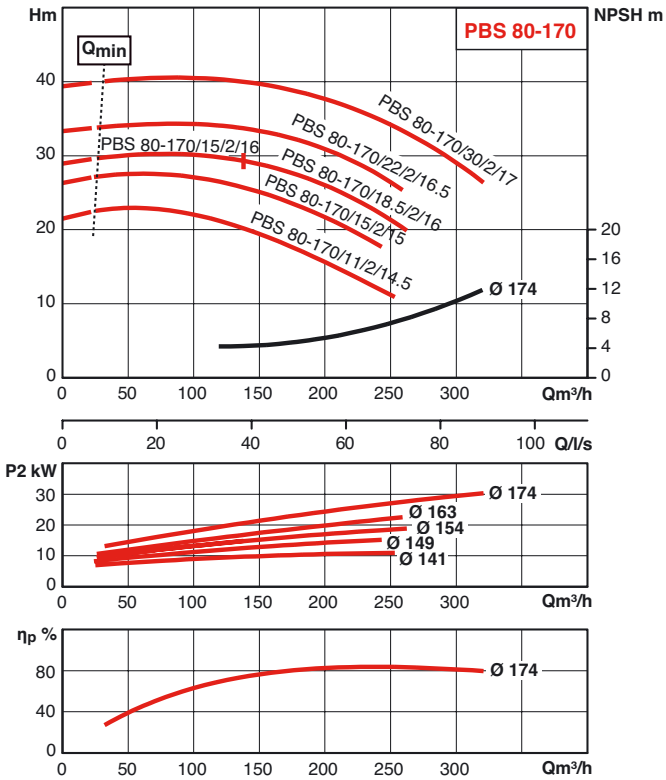

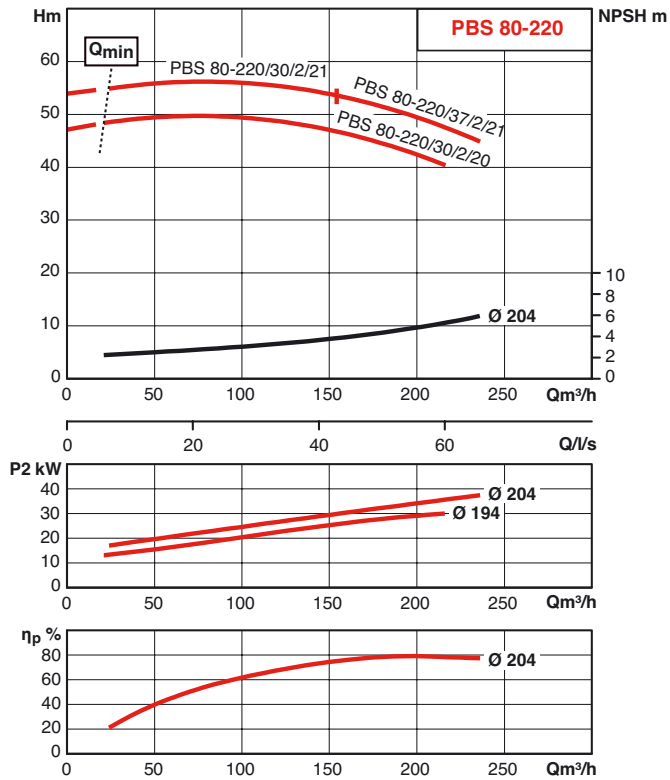

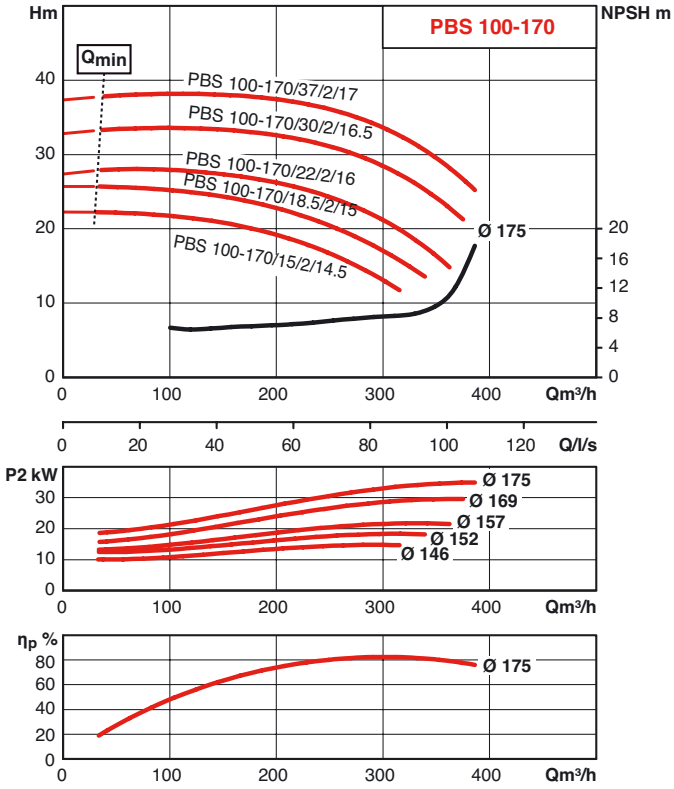

PBS

ELECTRICAL AND DIMENSIONAL CHARACTERISTICS

Diagram A

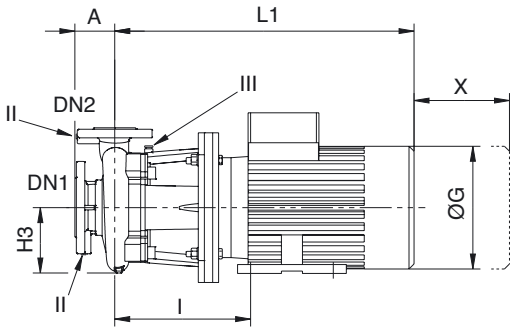

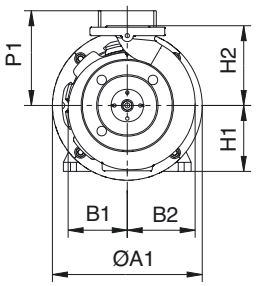

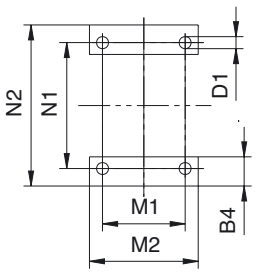

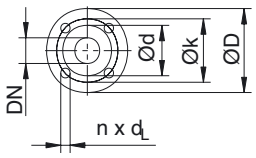

Suction				
DN1	ØD	Øk	Ød	holes
	mm	mm	mm	n x Ø
50	165	125	99	4 x 19
65	185	145	118	4 x 19
80	200	160	132	4 x 19
100	220	180	156	8 x 19
125	250	210	184	8 x 19
150	285	240	211	8 x 23

	MOTOR					PUMP								
Description	Nominal power Motor	Motor output %	Power factor	Rotation speed	Nominal current (env.)	DN1	DN2	L1	A	B1	B2	B3	Q	P1
	P2	η	cos ϕ	rpm	in A	Suction	Discharge	mm	mm	mm	mm	mm	mm	mm
	W													
PBS32-170/2.2/2/14	2200	83.2	0.82	2900	4.4	50	32	476	80	113	129	144	144	-
PBS32-170/0.37/4/15	370	76.1	0.71	1450	1.06	50	32	388	80	113	129	110	110	-
PBS32-170/3/2/15	3000	84.6	0.84	2900	5.8	50	32	531	80	113	129	150	150	-
PBS32-170/0.55/4/16	550	78.1	0.66	1450	1.4	50	32	423	80	113	129	123	123	-
PBS32-170/4/2/16	4000	85.8	0.84	2900	7.7	50	32	555	80	113	129	156	156	-
PBS32-170/0.75/4/17	750	79.6	0.72	1450	1.9	50	32	437	80	113	129	123	123	-
PBS32-170/5.5/2/17	5500	87	0.87	2900	10.2	50	32	600	80	113	129	-	-	188
PBS32-220/1.1/4/21	1100	81.4	0.77	1450	2.55	50	32	446	80	145	149	-	-	151
PBS32-220/1.5/4/22	1500	82.8	0.75	1450	3.4	50	32	473	80	145	149	-	-	151
PBS32-220/7.5/2/21	7500	88.1	0.89	2900	13.7	50	32	614	80	145	149	-	-	188
PBS32-220/11/2/22	11000	89.4	0.81	2900	22	50	32	761	80	145	149	-	-	250
PBS40-140/1.5/2/11	1500	81.3	0.78	2900	3.3	65	40	447	80	101	119	144	144	-
PBS40-140/2.2/2/12	2200	83.2	0.82	2900	4.4	65	40	474	80	101	119	144	144	-
PBS40-140/3/2/13	3000	84.6	0.84	2900	5.8	65	40	530	80	101	119	150	150	-
PBS40-140/3/2/14	3000	84.6	0.84	2900	5.8	65	40	530	80	101	119	150	150	-
PBS40-140/4/2/14	4000	85.8	0.84	2900	7.7	65	40	554	80	101	119	156	156	-
PBS40-170/0.55/4/15	550	78.1	0.66	1450	1.4	65	40	423	80	120	135	123	123	-
PBS40-170/0.75/4/16	750	79.6	0.72	1450	1.9	65	40	437	80	120	135	123	123	-
PBS40-170/5.5/2/16	5500	87	0.87	2900	10.2	65	40	601	80	120	135	-	-	188
PBS40-170/1.1/4/17	1100	81.4	0.77	1450	2.55	65	40	449	80	120	135	144	144	-
PBS40-170/5.5/2/17	5500	87	0.87	2900	10.2	65	40	601	80	120	135	-	-	188
PBS40-170/7.5/2/17	7500	88.1	0.89	2900	13.7	65	40	607	80	120	135	-	-	188
PBS40-220/1.5/4/21	1500	82.8	0.75	1450	3.4	65	40	480	100	145	151	-	-	151
PBS40-220/2.2/4/22	2200	84.3	0.73	1450	5	65	40	536	100	145	151	-	-	160
PBS40-220/7.5/2/18	7500	88.1	0.89	2900	13.7	65	40	621	100	145	151	-	-	188
PBS40-220/11/2/21	11000	89.4	0.81	2900	22	65	40	768	100	145	151	-	-	250
PBS40-220/11/2/22	11000	89.4	0.81	2900	22	65	40	768	100	145	151	-	-	250
PBS40-220/15/2/22	15000	90.3	0.84	2900	28.5	65	40	768	100	145	151	-	-	250
PBS40-270/15/2/23	15000	90.3	0.84	2900	28.5	65	40	772	100	174	174	-	-	250
PBS40-270/18.5/2/23	18500	90.9	0.86	2900	34.2	65	40	773	100	174	174	-	-	250
PBS40-270/22/2/24.5	22000	91.3	0.85	2900	40.7	65	40	857	100	174	174	-	-	291
PBS40-270/18.5/2/24	18500	90.9	0.86	2900	34.2	65	40	773	100	174	174	-	-	250
PBS40-270/2.2/4/22.5	2200	84.3	0.73	1450	5	65	40	538	100	174	174	-	-	160
PBS40-270/22/2/24	22000	91.3	0.85	2900	40.7	65	40	857	100	174	174	-	-	291
PBS40-270/2.2/4/24	2200	84.3	0.73	1450	5	65	40	538	100	174	174	-	-	160
PBS40-270/3/4/24	3000	85.5	0.75	1450	6.6	65	40	573	100	174	174	-	-	168
PBS40-270/30/2/24.5	30000	92	0.85	2900	53	65	40	931	100	174	174	-	-	305
PBS40-270/22/2/26	22000	91.3	0.85	2900	40.7	65	40	857	100	174	174	-	-	291
PBS40-270/3/4/26.5	3000	85.5	0.75	1450	6.6	65	40	573	100	174	174	-	-	168
PBS40-270/30/2/26	30000	92	0.85	2900	53	65	40	931	100	174	174	-	-	305
PBS40-270/4/4/26.5	4000	86.6	0.79	1450	8.4	65	40	616	100	174	174	-	-	188
PBS50-140/3/2/11	3000	84.6	0.84	2900	5.8	65	50	537	100	111	133	150	150	-

ELECTRICAL AND DIMENSIONAL CHARACTERISTICS

Diagram B

Discharge				
DN2	ØD	Øk	Ød	holes
	mm	mm	mm	n x Ø
32	140	100	76	4 x 19
40	150	110	84	4 x 19
50	165	125	99	4 x 19
65	185	145	118	4 x 19
80	200	160	132	8 x 19
100	220	180	156	8 x 19
125	250	210	184	8 x 19

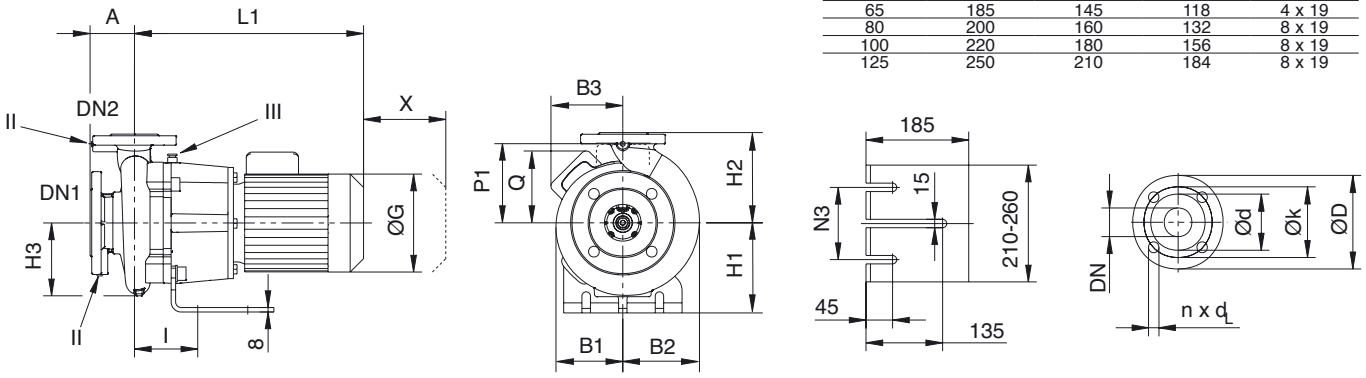

PUMP

Description	B4	ØA1	H1	H2	H3	I	N2	N1	M2	M1	D1	X	Ø G	mass	Diagram
	mm	mm	mm	mm	mm	mm	mm	mm	mm	mm	mm	mm	mm	kg	
PBS32-170/2.2/2/14	-	200	160	160	122	110	-	-	-	-	-	95	193	54	B
PBS32-170/0.37/4/15	-	160	160	160	122	110	-	-	-	-	-	95	164	37	B
PBS32-170/3/2/15	-	250	160	160	122	110	-	-	-	-	-	95	217	61	B
PBS32-170/0.55/4/16	-	200	160	160	122	110	-	-	-	-	-	95	185	42	B
PBS32-170/4/2/16	-	250	160	160	122	110	-	-	-	-	-	95	232	72	B
PBS32-170/0.75/4/17	-	200	160	160	122	110	-	-	-	-	-	95	185	45	B
PBS32-170/5.5/2/17	53	325	132	160	122	284.4	256	216	180	140	12	95	267	87	A
PBS32-220/1.1/4/21	-	200	180	180	145	117	-	-	-	-	-	100	193	56	A
PBS32-220/1.5/4/22	53	300	132	180	145	292	256	216	180	140	12	100	267	99	A
PBS32-220/7.5/2/21	-	200	180	180	145	117	-	-	-	-	-	100	193	57	A
PBS32-220/11/2/22	60	350	160	180	145	352	300	254	256	210	15	100	320	154	A
PBS40-140/1.5/2/11	-	200	160	140	111	114	-	-	-	-	-	100	193	47	B
PBS40-140/2.2/2/12	-	200	160	140	111	114	-	-	-	-	-	100	193	50	B
PBS40-140/3/2/13	-	250	160	140	111	114	-	-	-	-	-	100	217	55	B
PBS40-140/3/2/14	-	250	160	140	111	114	-	-	-	-	-	100	217	57	B
PBS40-140/4/2/14	-	250	160	140	111	114	-	-	-	-	-	100	232	69	B
PBS40-170/0.55/4/15	-	200	160	160	132	114	-	-	-	-	-	100	185	44	B
PBS40-170/0.75/4/16	-	200	160	160	132	114	-	-	-	-	-	100	185	48	B
PBS40-170/5.5/2/16	53	325	132	160	132	285.4	256	216	180	140	12	100	267	89	A
PBS40-170/1.1/4/17	-	200	160	160	132	114	-	-	-	-	-	100	193	52	B
PBS40-170/5.5/2/17	53	325	132	160	132	285.4	256	216	180	140	12	100	267	89	A
PBS40-170/7.5/2/17	53	325	132	160	132	285.4	256	216	180	140	12	100	267	93	A
PBS40-220/1.5/4/21	-	200	180	180	145	124	-	-	-	-	-	100	193	63	A
PBS40-220/2.2/4/22	-	250	180	180	145	124	-	-	-	-	-	100	217	72	A
PBS40-220/7.5/2/18	53	300	132	180	145	299	256	216	180	140	12	100	267	103	A
PBS40-220/11/2/21	60	350	160	180	145	359	300	254	256	210	15	100	320	157	A
PBS40-220/11/2/22	60	350	160	180	145	359	300	254	256	210	15	100	320	157	A
PBS40-220/15/2/22	60	350	160	180	145	359	320	254	260	210	14	100	320	165	A
PBS40-270/15/2/23	60	350	160	225	174	363	300	254	256	210	14	120	320	177	A
PBS40-270/18.5/2/23	60	350	160	225	174	363	300	254	300	210	14	120	320	181	A
PBS40-270/22/2/24.5	69.5	350	180	225	174	376	339	279	287	241	14	120	363	210	A
PBS40-270/18.5/2/24	60	350	160	225	174	363	300	254	300	210	14	120	320	181	A
PBS40-270/2.2/4/22.5	-	250	200	225	174	126	-	-	-	-	-	70	217	82	A
PBS40-270/22/2/24	69.5	350	180	225	174	376	339	279	287	241	15	120	363	210	A
PBS40-270/2.2/4/24	-	250	200	225	174	126	-	-	-	-	-	70	217	82	A
PBS40-270/3/4/24	-	250	200	225	174	126	-	-	-	-	-	70	220	90	A
PBS40-270/30/2/24.5	83	400	200	225	174	405	388	318	355	305	19	120	402	266	A
PBS40-270/22/2/26	69.5	350	180	225	174	376	339	279	287	241	15	120	363	210	A
PBS40-270/3/4/26.5	-	250	200	225	174	126	-	-	-	-	-	70	220	90	A
PBS40-270/30/2/26	83	400	200	225	174	405	403	318	380	305	19	120	402	266	A
PBS40-270/4/4/26.5	-	250	200	225	174	126	-	-	-	-	-	70	246	93	A
PBS50-140/3/2/11	-	250	160	160	124	121	-	-	-	-	-	110	217	60	B

PBS

ELECTRICAL AND DIMENSIONAL CHARACTERISTICS

Diagram A

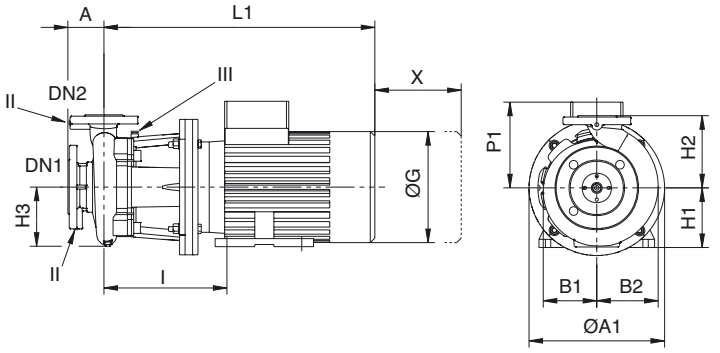

Suction				
DN1	ØD	Øk	Ød	holes
	mm	mm	mm	n x Ø
50	165	125	99	4 x 19
65	185	145	118	4 x 19
80	200	160	132	4 x 19
100	220	180	156	8 x 19
125	250	210	184	8 x 19
150	285	240	211	8 x 23

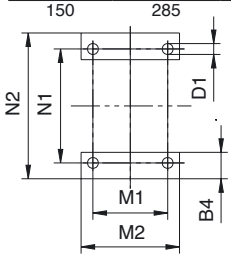

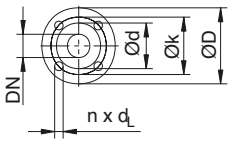

Description	MOTOR					PUMP								
	Nominal power Motor	Motor output %	Power factor	Rotation speed	Nominal current (env.)	DN1	DN2	L1	A	B1	B2	B3	Q	P1
	P2	η	cos ϕ	rpm	in A									
	W					Suction	Discharge	mm	mm	mm	mm	mm	mm	mm
PBS50-140/3/2/12	3000	84.6	0.84	2900	5.8	65	50	537	100	111	133	150	150	-
PBS50-140/4/2/12	4000	85.8	0.84	2900	7.7	65	50	561	100	111	133	156	156	-
PBS50-140/5.5/2/13	5500	87	0.87	2900	10.2	65	50	612	100	111	133	-	-	188
PBS50-140/5.5/2/14	5500	87	0.87	2900	10.2	65	50	612	100	111	133	-	-	188
PBS50-140/7.5/2/14	7500	88.1	0.89	2900	13.7	65	50	618	100	111	133	-	-	188
PBS50-170/1.1/4/16	1100	81.4	0.77	1450	2.55	65	50	457	100	127	147	144	144	-
PBS50-170/1.1/4/17	1100	81.4	0.77	1450	2.55	65	50	457	100	127	147	144	144	-
PBS50-170/1.5/4/17	1500	82.8	0.75	1450	3.4	65	50	484	100	127	147	144	144	-
PBS50-170/5.5/2/15	5500	87	0.87	2900	10.2	65	50	609	100	127	147	-	-	188
PBS50-170/7.5/2/15	7500	88.1	0.89	2900	13.7	65	50	615	100	127	147	-	-	188
PBS50-170/11/2/17	11000	89.4	0.81	2900	22	65	50	771	100	127	147	-	-	250
PBS50-220/11/2/20	11000	89.4	0.81	2900	22	65	50	768	100	153	172	-	-	250
PBS50-220/15/2/20	15000	90.3	0.84	2900	28.5	65	50	768	100	153	172	-	-	250
PBS50-220/2.2/4/20	2200	84.3	0.73	1450	5	65	50	536	100	153	172	-	-	160
PBS50-220/15/2/21	15000	90.3	0.84	2900	28.5	65	50	768	100	153	172	-	-	250
PBS50-220/18.5/2/21	18500	90.9	0.86	2900	34.2	65	50	769	100	153	172	-	-	250
PBS50-220/18.5/2/22	18500	90.9	0.86	2900	34.2	65	50	769	100	153	172	-	-	250
PBS50-220/2.2/4/22	2200	84.3	0.73	1450	5	65	50	536	100	153	172	-	-	160
PBS50-220/22/2/22	22000	91.3	0.85	2900	40.7	65	50	853	100	153	172	-	-	291
PBS50-220/3/4/22	3000	85.5	0.75	1450	6.6	65	50	571	100	153	172	-	-	168
PBS50-270/30/2/24	30000	92	0.85	2900	53	65	50	936	100	174	186	-	-	305
PBS50-270/3/4/25	3000	85.5	0.75	1450	6.6	65	50	578	100	174	186	-	-	168
PBS50-270/4/4/25	4000	86.6	0.79	1450	8.4	65	50	621	100	174	186	-	-	188
PBS50-270/30/2/26	30000	92	0.85	2900	53	65	50	936	100	174	186	-	-	305
PBS50-270/37/2/26	37000	92.5	0.88	2900	65	65	50	936	100	174	186	-	-	305
PBS50-270/5.5/4/27	5500	87.7	0.78	1450	11	65	50	622	100	174	186	-	-	188
PBS65-140/4/2/12	4000	85.8	0.84	2900	7.7	80	65	566	100	123	151	156	156	-
PBS65-140/5.5/2/13	5500	87	0.87	2900	10.2	80	65	617	100	123	151	-	-	188
PBS65-140/7.5/2/14	7500	88.1	0.89	2900	13.7	80	65	623	100	123	151	-	-	188
PBS65-170/1.1/4/15	1100	81.4	0.77	1450	2.55	80	65	465	100	136	162	144	144	-
PBS65-170/1.5/4/16	1500	82.8	0.75	1450	3.4	80	65	492	100	136	162	144	144	-
PBS65-170/11/2/16	11000	89.4	0.81	2900	22	80	65	779	100	136	162	-	-	250
PBS65-170/11/2/17	11000	89.4	0.81	2900	22	80	65	779	100	136	162	-	-	250
PBS65-170/15/2/17	15000	90.3	0.84	2900	28.5	80	65	779	100	136	162	-	-	250
PBS65-170/2.2/4/17	2200	84.3	0.73	1450	5	80	65	548	100	136	162	150	150	-
PBS65-220/15/2/19	15000	90.3	0.84	2900	28.5	80	65	783	100	156	181	-	-	250
PBS65-220/18.5/2/19	18500	90.9	0.86	2900	34.2	80	65	784	100	156	181	-	-	250
PBS65-220/18.5/2/21	18500	90.9	0.86	2900	34.2	80	65	784	100	156	181	-	-	250
PBS65-220/22/2/21	22000	91.3	0.85	2900	40.7	80	65	868	100	156	181	-	-	291
PBS65-220/3/4/21	3000	85.5	0.75	1450	6.6	80	65	585	100	156	181	-	-	168
PBS65-220/30/2/22	30000	92	0.85	2900	53	80	65	925	100	156	181	-	-	305
PBS65-220/4/4/22	4000	86.6	0.79	1450	8.4	80	65	628	100	156	181	-	-	188
PBS65-270/5.5/4/24	5500	87.7	0.78	1450	11	80	65	629	100	214	237	-	-	188
PBS65-270/5.5/4/26.5	5500	87.7	0.78	1450	11	80	65	629	100	187	210	-	-	188
PBS65-270/7.5/4/26.5	7500	88.7	0.81	1450	15	80	65	680	100	214	237	-	-	250
PBS80-170/11/2/14.5	11000	89.4	0.81	2900	22	100	80	786	125	160	196	-	-	250

ELECTRICAL AND DIMENSIONAL CHARACTERISTICS

Diagram B

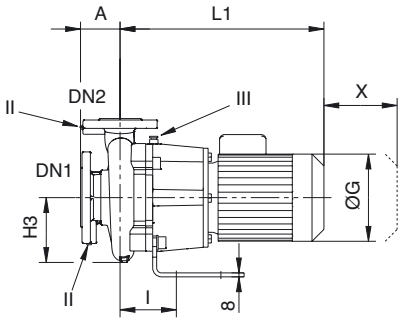

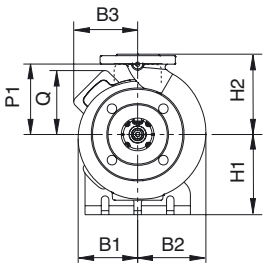

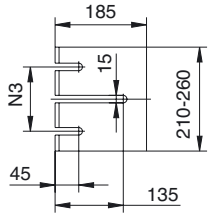

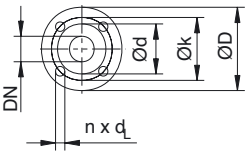

PUMP

Discharge DN2	ØD mm	Øk mm	Ød mm	holes n x Ø
32	140	100	76	4 x 19
40	150	110	84	4 x 19
50	165	125	99	4 x 19
65	185	145	118	4 x 19
80	200	160	132	8 x 19
100	220	180	156	8 x 19
125	250	210	184	8 x 19

Description	B4	ØA1	H1	H2	H3	I	N2	N1	M2	M1	D1	X	Ø G	mass	Diagram
	mm	mm	mm	mm	mm	mm	mm	mm	mm	mm	mm	mm	mm	kg	
PBS50-140/3/2/12	-	250	160	160	124	121	-	-	-	-	-	110	217	60	B
PBS50-140/4/2/12	-	250	160	160	124	121	-	-	-	-	-	110	232	72	B
PBS50-140/5.5/2/13	53	300	132	160	124	295.6	256	216	180	140	12	110	267	84	A
PBS50-140/5.5/2/14	53	300	132	160	124	295.6	256	216	180	140	12	110	267	84	A
PBS50-140/7.5/2/14	53	300	132	160	124	295.6	256	216	180	140	12	110	267	88	A
PBS50-170/1.1/4/16	-	200	160	180	152	122	-	-	-	-	-	120	193	55	B
PBS50-170/1.1/4/17	-	200	160	180	152	122	-	-	-	-	-	120	193	55	B
PBS50-170/1.5/4/17	-	200	160	180	152	122	-	-	-	-	-	120	193	56	B
PBS50-170/5.5/2/15	53	325	132	180	152	293.4	256	216	180	140	12	120	267	92	A
PBS50-170/7.5/2/15	53	325	132	180	152	293.4	256	216	180	140	12	120	267	96	A
PBS50-170/11/2/17	60	350	160	180	152	361.8	300	254	256	210	15	120	320	142	A
PBS50-220/11/2/20	60	350	160	200	159	359	300	254	256	210	15	110	320	159	A
PBS50-220/15/2/20	60	350	160	200	159	359	320	254	260	210	14	110	320	166	A
PBS50-220/2.2/4/20	-	250	180	200	159	124	-	-	-	-	-	110	217	71	A
PBS50-220/15/2/21	60	350	160	200	159	359	320	254	260	210	14	110	320	166	A
PBS50-220/18.5/2/21	60	350	160	200	159	359	320	254	304	210	14	110	320	170	A
PBS50-220/18.5/2/22	60	350	160	200	159	359	320	254	304	210	14	110	320	170	A
PBS50-220/2.2/4/22	-	250	180	200	159	124						110	217	71	A
PBS50-220/22/2/22	69.5	350	180	200	159	372	352	279	300	241	14	110	363	200	A
PBS50-220/3/4/22	-	250	180	200	159	124	-	-	-	-	-	110	220	79	A
PBS50-270/30/2/24	83	400	200	225	179	410	403	318	380	305	19	110	402	265	A
PBS50-270/3/4/25	-	250	200	225	179	131	-	-	-	-	-	110	220	85	A
PBS50-270/4/4/25	-	250	200	225	179	131	-	-	-	-	-	110	246	88	A
PBS50-270/30/2/26	83	400	200	225	179	410	403	318	380	305	19	110	402	265	A
PBS50-270/37/2/26	83	400	200	225	179	410	403	318	380	305	18	110	402	294	A
PBS50-270/5.5/4/27	53	300	132	225	179	306	256	216	180	140	12	110	279	112	A
PBS65-140/4/2/12	-	250	160	180	155	126.5	-	-	-	-	-	120	232	77	B
PBS65-140/5.5/2/13	53	300	132	180	155	301	256	216	180	140	12	120	267	89	A
PBS65-140/7.5/2/14	53	300	132	180	155	301	256	216	180	140	12	120	267	93	A
PBS65-170/1.1/4/15	-	200	160	200	155	130	-	-	-	-	-	120	193	61	B
PBS65-170/1.5/4/16	-	200	160	200	155	130	-	-	-	-	-	120	193	62	B
PBS65-170/11/2/16	60	350	160	200	155	369.5	300	254	256	210	15	120	320	148	A
PBS65-170/11/2/17	60	350	160	200	155	369.5	300	254	256	210	15	120	320	148	A
PBS65-170/15/2/17	60	350	160	200	155	369.5	320	254	260	210	14	120	320	155	A
PBS65-170/2.2/4/17	-	250	160	200	155	130	-	-	-	-	-	120	217	72	B
PBS65-220/15/2/19	60	350	160	225	170	374	320	254	260	210	14	120	320	172	A
PBS65-220/18.5/2/19	60	350	160	225	170	374	320	254	304	210	14	120	320	176	A
PBS65-220/18.5/2/21	60	350	160	225	170	374	320	254	304	210	14	120	320	176	A
PBS65-220/22/2/21	69.5	350	180	225	170	387	352	279	300	241	14	120	363	209	A
PBS65-220/3/4/21	-	250	200	225	170	139	-	-	-	-	-	120	220	85	A
PBS65-220/30/2/22	83	400	200	225	170	399	403	318	380	305	19	120	402	255	A
PBS65-220/4/4/22	-	250	200	225	170	139	-	-	-	-	-	120	246	88	A
PBS65-270/5.5/4/24	53	300	132	250	200	313	256	216	180	140	12	90	279	124	A
PBS65-270/5.5/4/26.5	53	300	132	250	200	313	256	216	180	140	12	90	279	124	A
PBS65-270/7.5/4/26.5	53	300	132	250	200	313	256	216	218	178	12	90	312	128	A
PBS80-170/11/2/14.5	60	350	160	225	178	376.8	300	254	256	210	15	135	320	158	A

PBS

ELECTRICAL AND DIMENSIONAL CHARACTERISTICS

Diagram A

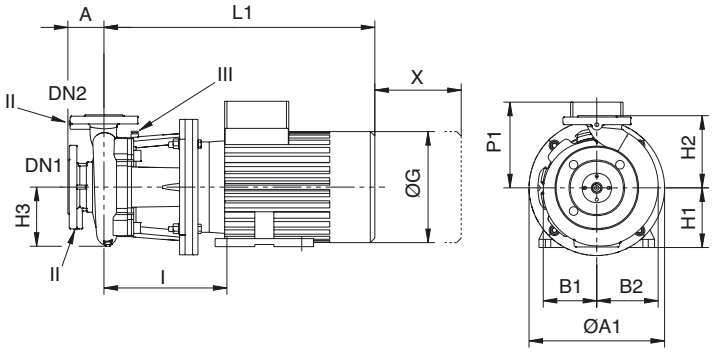

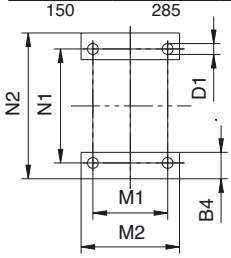

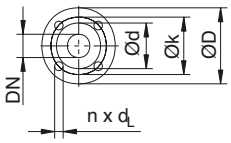

Suction				
DN1	ØD	Øk	Ød	holes
	mm	mm	mm	n x Ø
50	165	125	99	4 x 19
65	185	145	118	4 x 19
80	200	160	132	4 x 19
100	220	180	156	8 x 19
125	250	210	184	8 x 19
150	285	240	211	8 x 23

Description	MOTOR					PUMP								
	Nominal power Motor	Motor output %	Power factor	Rotation speed	Nominal current (env.)	DN1	DN2	L1	A	B1	B2	B3	Q	P1
	P2	η	cos ϕ	rpm	in A									
	W					Suction	Discharge	mm	mm	mm	mm	mm	mm	mm
PBS80-170/1.5/4/15	1500	82.8	0.75	1450	3.4	100	80	499	125	160	196	144	144	-
PBS80-170/15/2/15	15000	90.3	0.84	2900	28.5	100	80	786	125	160	196	-	-	250
PBS80-170/15/2/16	15000	90.3	0.84	2900	28.5	100	80	786	125	160	196	-	-	250
PBS80-170/18.5/2/16	18500	90.9	0.86	2900	34.2	100	80	787	125	160	196	-	-	250
PBS80-170/2.2/4/16	2200	84.3	0.73	1450	5	100	80	555	125	160	196	150	150	-
PBS80-170/22/2/16.5	22000	91.3	0.85	2900	40.7	100	80	871	125	160	196	-	-	291
PBS80-170/3/4/17	3000	85.5	0.75	1450	6.6	100	80	590	125	160	196	155	155	-
PBS80-170/30/2/17	30000	92	0.85	2900	53	100	80	928	125	160	196	-	-	305
PBS80-220/3/4/20	3000	85.5	0.75	1450	6.6	100	80	590	125	170	197	-	-	168
PBS80-220/30/2/20	30000	92	0.85	2900	53	100	80	929	125	170	197	-	-	305
PBS80-220/4/4/20	4000	86.6	0.79	1450	8.4	100	80	633	125	170	197	-	-	188
PBS80-220/30/2/21	30000	92	0.85	2900	53	100	80	929	125	170	197	-	-	305
PBS80-220/37/2/21	37000	92.5	0.88	2900	65	100	80	929	125	170	197	-	-	305
PBS80-220/5.5/4/22	5500	87.7	0.78	1450	11	100	80	634	125	170	197	-	-	188
PBS80-270/5.5/4/25	5500	87.7	0.78	1450	11	100	80	625	125	192	218	-	-	188
PBS80-270/7.5/4/25	7500	88.7	0.81	1450	15	100	80	676	125	192	218	-	-	250
PBS80-270/11/4/27	11000	89.8	0.8	1450	22.2	100	80	739	125	192	218	-	-	250
PBS100-170/1.5/4/14.5	1500	82.8	0.75	1450	3.4	125	100	510	125	167	206	144	144	-
PBS100-170/15/2/14.5	15000	90.3	0.84	2900	28.5	125	100	796	125	167	206	-	-	250
PBS100-170/18.5/2/15	18500	90.9	0.86	2900	34.2	125	100	797	125	167	206	-	-	250
PBS100-170/2.2/4/15	2200	84.3	0.73	1450	5	125	100	565	125	167	206	150	150	-
PBS100-170/22/2/16	22000	91.3	0.85	2900	40.7	125	100	881	125	167	206	-	-	291
PBS100-170/3/4/16	3000	85.5	0.75	1450	6.6	125	100	600	125	167	206	155	155	-
PBS100-170/30/2/16.5	30000	92	0.85	2900	53	125	100	938	125	167	206	-	-	305
PBS100-170/37/2/17	37000	92.5	0.88	2900	65	125	100	938	125	167	206	-	-	305
PBS100-170/4/4/17	4000	86.6	0.79	1450	8.4	125	100	643	125	167	206	170	170	-
PBS100-220/4/4/18	4000	86.6	0.79	1450	8.4	125	100	646	125	176	211	-	-	188
PBS100-220/5.5/4/20	5500	87.7	0.78	1450	11	125	100	647	125	176	211	-	-	188
PBS100-220/5.5/4/22	5500	87.7	0.78	1450	11	125	100	647	125	176	211	-	-	188
PBS100-220/7.5/4/22	7500	88.7	0.81	1450	15	125	100	698	125	176	211	-	-	250
PBS100-270/11/4/25	11000	89.8	0.8	1450	22.2	125	100	753	140	200	232	-	-	250
PBS100-270/15/4/27	15000	90.6	0.83	1450	28.8	125	100	793	140	200	232	-	-	250
PBS100-340/18.5/4/30.5	18500	91.2	0.84	1450	35	125	100	912	140	263	297	-	-	258
PBS100-340/18.5/4/31.5	18500	91.2	0.84	1450	35	125	100	912	140	263	297	-	-	258
PBS100-340/22/4/31.5	22000	91.6	0.84	1450	41.5	125	100	912	140	263	297	-	-	258
PBS100-340/22/4/33	22000	91.6	0.84	1450	41.5	125	100	912	140	263	297	-	-	258
PBS100-340/30/4/33	30000	92.3	0.85	1450	55.7	125	100	969	140	263	297	-	-	305
PBS100-340/22/4/34.5	22000	91.6	0.84	1450	41.5	125	100	912	140	263	297	-	-	258
PBS100-340/30/4/34.5	30000	92.3	0.85	1450	55.7	125	100	969	140	263	297	-	-	305
PBS125-220/5.5/4/18.5	5500	87.7	0.78	1450	11	150	125	659	140	207	254	-	-	188
PBS125-220/7.5/4/21	7500	88.7	0.81	1450	15	150	125	710	140	207	254	-	-	250
PBS125-220/11/4/22.5	11000	89.8	0.8	1450	22.2	150	125	774	140	207	254	-	-	250
PBS125-270/15/4/24.5	15000	90.6	0.83	1450	28.8	150	125	832	140	252	294	-	-	250
PBS125-270/15/4/26.5	15000	90.6	0.83	1450	28.8	150	125	916	140	252	294	-	-	250
PBS125-270/18.5/4/26.5	18500	90.6	0.83	1450	28.8	150	125	916	140	252	294	-	-	250
PBS125-270/18.5/4/27.5	18500	91.2	0.84	1450	35	150	125	916	140	252	294	-	-	258
PBS125-270/22/4/27.5	22000	90.6	0.83	1450	28.8	150	125	832	140	252	294	-	-	250

ELECTRICAL AND DIMENSIONAL CHARACTERISTICS

Diagram B

Discharge				
DN2	ØD	Øk	Ød	holes
	mm	mm	mm	n x Ø
32	140	100	76	4 x 19
40	150	110	84	4 x 19
50	165	125	99	4 x 19
65	185	145	118	4 x 19
80	200	160	132	8 x 19
100	220	180	156	8 x 19
125	250	210	184	8 x 19

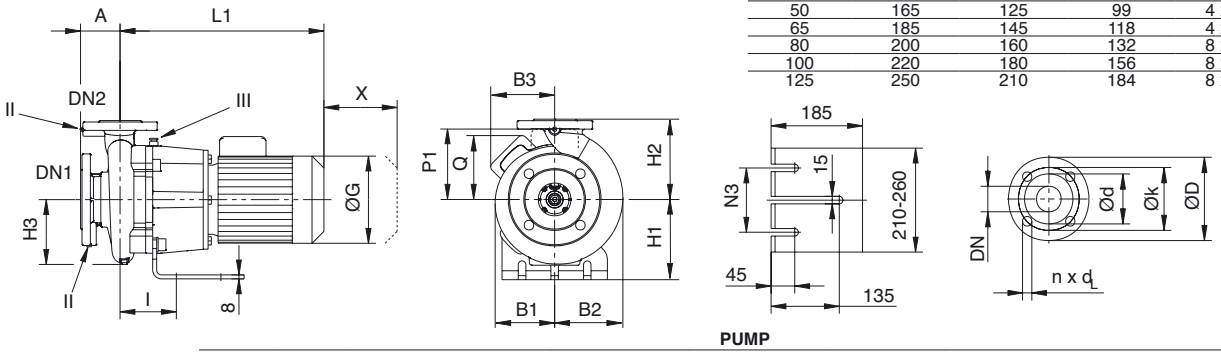

PUMP

Description	B4	ØA1	H1	H2	H3	I	N2	N1	M2	M1	D1	X	Ø G	mass	Diagram
	mm	mm	mm	mm	mm	mm	mm	mm	mm	mm	mm	mm	mm	kg	
PBS80-170/1.5/4/15	-	200	180	225	178	137	-	-	-	-	-	135	193	73	B
PBS80-170/15/2/15	60	350	160	225	178	376.8	320	254	260	210	14	135	320	165	A
PBS80-170/15/2/16	60	350	160	225	178	376.8	320	254	260	210	14	135	320	165	A
PBS80-170/18.5/2/16	60	350	160	225	178	376.8	320	254	304	210	14	135	320	169	A
PBS80-170/2.2/4/16	-	250	180	225	178	137	-	-	-	-	-	135	217	81	B
PBS80-170/22/2/16.5	69.5	350	180	225	178	389.8	352	279	300	241	14	135	363	199	A
PBS80-170/3/4/17	-	250	180	225	178	137	-	-	-	-	-	135	220	91	B
PBS80-170/30/2/17	83	400	200	225	178	401.8	403	318	380	305	19	135	402	250	A
PBS80-220/3/4/20	-	250	200	250	178	143	-	-	-	-	-	120	220	95	A
PBS80-220/30/2/20	83	400	200	250	178	403	403	318	380	305	19	120	402	268	A
PBS80-220/4/4/20	-	250	200	250	178	143	-	-	-	-	-	120	246	98	A
PBS80-220/30/2/21	83	400	200	250	178	403	403	318	380	305	19	120	402	268	A
PBS80-220/37/2/21	83	400	200	250	178	403	403	318	380	305	18	120	402	297	A
PBS80-220/5.5/4/22	53	300	132	250	178	318	256	216	180	140	12	120	279	119	A
PBS80-270/5.5/4/25	53	300	132	280	199	309	256	216	180	140	12	120	279	130	A
PBS80-270/7.5/4/25	53	300	132	280	199	309	256	216	218	178	12	120	312	141	A
PBS80-270/11/4/27	60	350	160	280	199	369	300	254	256	210	15	120	320	191	A
PBS100-170/1.5/4/14.5	-	200	200	280	189	146.5	-	-	-	-	-	60	193	81	B
PBS100-170/15/2/14.5	60	350	160	280	189	387	320	254	260	210	14	120	320	178	A
PBS100-170/18.5/2/15	60	350	160	280	189	387	320	254	304	210	14	120	320	182	A
PBS100-170/2.2/4/15	-	250	200	280	189	146.5	-	-	-	-	-	60	217	91	B
PBS100-170/22/2/16	69.5	350	180	280	189	400	352	279	300	241	14	120	363	212	A
PBS100-170/3/4/16	-	250	200	280	189	146.5	-	-	-	-	-	70	220	99	B
PBS100-170/30/2/16.5	83	400	200	280	189	412	403	318	380	305	19	120	402	258	A
PBS100-170/37/2/17	83	400	200	280	189	412	403	318	380	305	18	120	402	287	A
PBS100-170/4/4/17	-	250	200	280	189	146.5	-	-	-	-	-	70	246	102	B
PBS100-220/4/4/18	-	250	200	280	196	156	-	-	-	-	-	120	246	102	A
PBS100-220/5.5/4/20	53	300	132	280	196	331	256	216	180	140	12	120	279	125	A
PBS100-220/5.5/4/22	53	300	132	280	196	331	256	216	180	140	12	120	279	125	A
PBS100-220/7.5/4/22	53	300	132	280	196	331	256	216	218	178	12	120	312	136	A
PBS100-270/11/4/25	60	350	160	280	219	383	300	254	256	210	15	130	320	205	A
PBS100-270/15/4/27	60	350	160	280	219	383	300	254	300	254	15	130	320	210	A
PBS100-340/18.5/4/30.5	69.5	350	180	315	250	431	339	279	287	241	15	120	370	272	A
PBS100-340/18.5/4/31.5	69.5	350	180	315	250	431	339	279	287	241	15	120	370	272	A
PBS100-340/22/4/31.5	69.5	350	180	315	250	431	339	279	325	279	15	120	370	289	A
PBS100-340/22/4/33	69.5	350	180	315	250	431	339	279	325	279	15	120	370	289	A
PBS100-340/30/4/33	83	400	200	315	250	443	388	318	355	305	19	120	415	366	A
PBS100-340/22/4/34.5	69.5	350	180	315	250	431	339	279	325	279	15	120	370	289	A
PBS100-340/30/4/34.5	83	400	200	315	250	443	388	318	355	305	19	120	415	366	A
PBS125-220/5.5/4/18.5	53	300	132	315	232	343	256	216	180	140	12	90	279	160	A
PBS125-220/7.5/4/21	53	300	132	315	232	343	256	216	218	178	12	90	312	165	A
PBS125-220/11/4/22.5	60	350	160	315	232	404	300	254	256	210	15	120	320	221	A
PBS125-270/15/4/24.5	60	350	180	355	250	345	300	254	300	254	15	120	320	249	A
PBS125-270/15/4/26.5	60	350	180	355	250	435	300	254	300	254	15	120	320	285	A
PBS125-270/18.5/4/26.5	60	350	180	355	250	435	300	254	300	254	15	120	320	268	A
PBS125-270/18.5/4/27.5	69.5	350	180	355	250	435	339	279	287	241	15	120	370	268	A
PBS125-270/22/4/27.5	60	350	180	355	250	435	300	254	300	254	15	120	320	249	A

PBS

ASSEMBLY POSITIONS

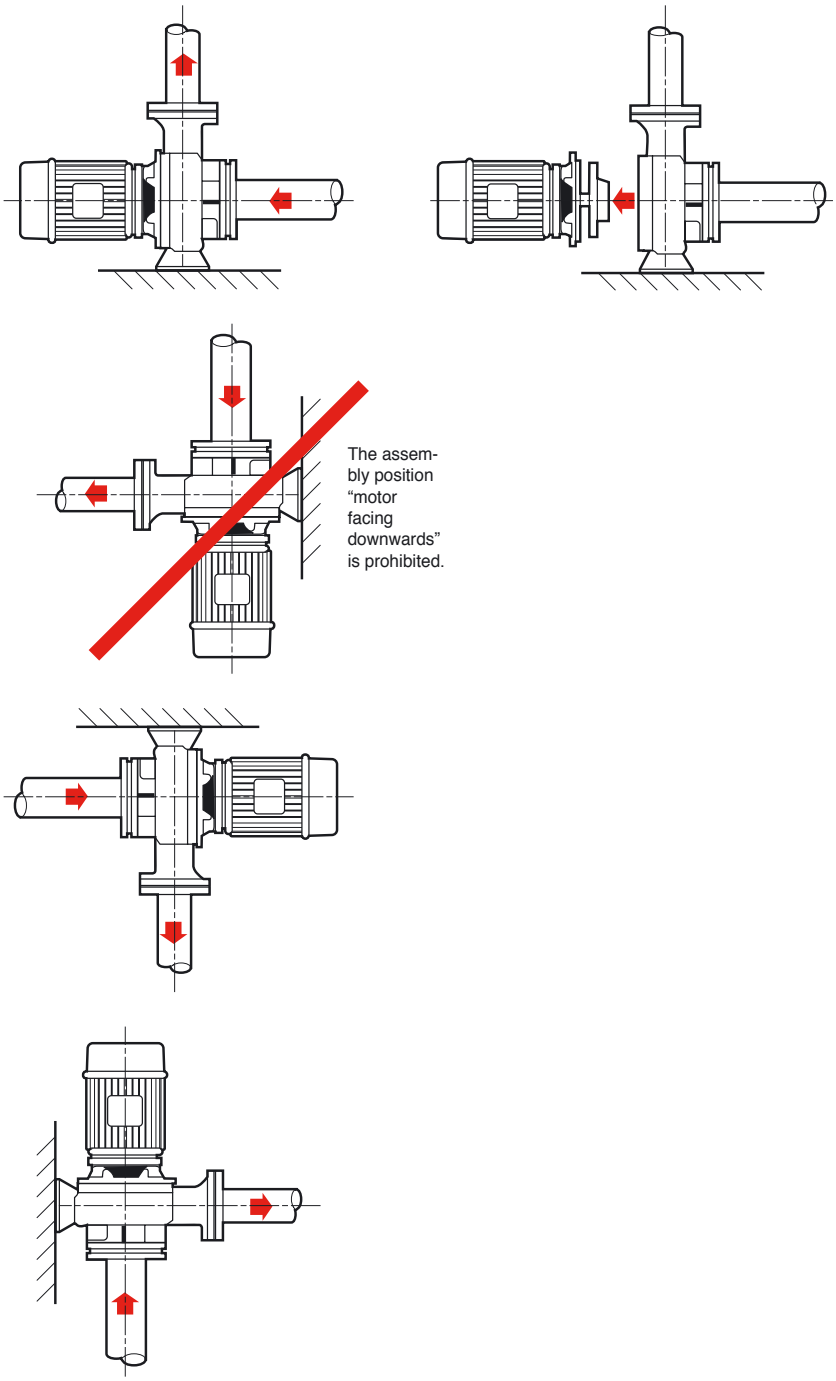

SPECIFIC FEATURES

a) Electrical

P2 ≤ 3 kW:	Three-phase 400 V **Y** 50 Hz
	Three-phase 230 V **Δ** 50 Hz
P2 ≥ 4 kW:	Three-phase 400 V **Δ** 50 Hz.

b) Installation

Assembly on solid base, horizontal or vertical axis motor facing upwards.
The installation must allow for protection of the pump against adverse weather and frost (no direct exposure to rain or sun).

c) Packaging

Pump delivered with backflange seals.

d) Maintenance

- Repair See recommended spare parts.

RECOMMENDED ACCESSORIES

- Backflanges
- Pressure kit
- Protective overcurrent release
- Shut-off valves
- Rubber anti-vibration sleeves
- Anti-return valves.

Optional special mechanical seal for 20 - 40% glycol water if temperature in excess of 40°C (contact us).

RANGE OF USE

Flow rate up to:	380 m³/h
Mano. head up to:	85 m
Fluid temperature range :	- 20° to +140°C
Mano. head up to:	85 m
Operating pressure up to:	
	13 bar up to +140°C
	16 bar up to +120°C
Suction DN up to :	125 mm
Discharge DN up to:	125 mm
Flange PN:	16 bar
reference MEI*: :	≥ 0,10

*Minimum Efficiency Index

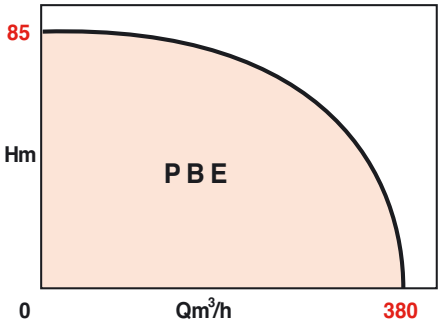

PBE

STANDARDISED HORIZONTAL MONOBLOC PUMPS

Heating – Air conditioning
Adduction – over pressure
50 Hz

A.C.S. standard: contact us

APPLICATIONS

- Hot water circulation according to VDI2035 or cold water circulation
- Glycol or cold water circuits up to 40% of glycol and temperature of 40°C
- Cooling water circuits
- Irrigation, washing
- Draining, filling, water boosting
- All industries involved in the pumping of clear, non-abrasive, chemically neutral liquids.

ADVANTAGES

- **Δp-c regulation (optional external sensor), PID (via and appropriate sensor) and constant n**
- **Wide hydraulic performance range (750-2900 rev/min and 380-1450 rev/min)**
- **Interface identical to pumps SIE, DIE, LRE and JRE**
- **A single button for navigation and parameters visible on the LCD screen**
- **0-10 V, 2-10 V, 0-20 mA, 4-20 mA interfaces for compatibility with the majority of control devices**
- **Bus communication thanks to plug-in IF modules (optional)**
- **Locking of parameters by means of a DIP switch**
- **Relay signals configurable in SSM and SBM for optimum integration in the GTC**
- **Integrated PTC sensor for intensity protection (thermal relay not necessary)**
- **Double pump operation with control by a master pump**
- **Cataphoretic coating for anticorrosion protection**
- **Condensate evacuation grooves for use in cold water**

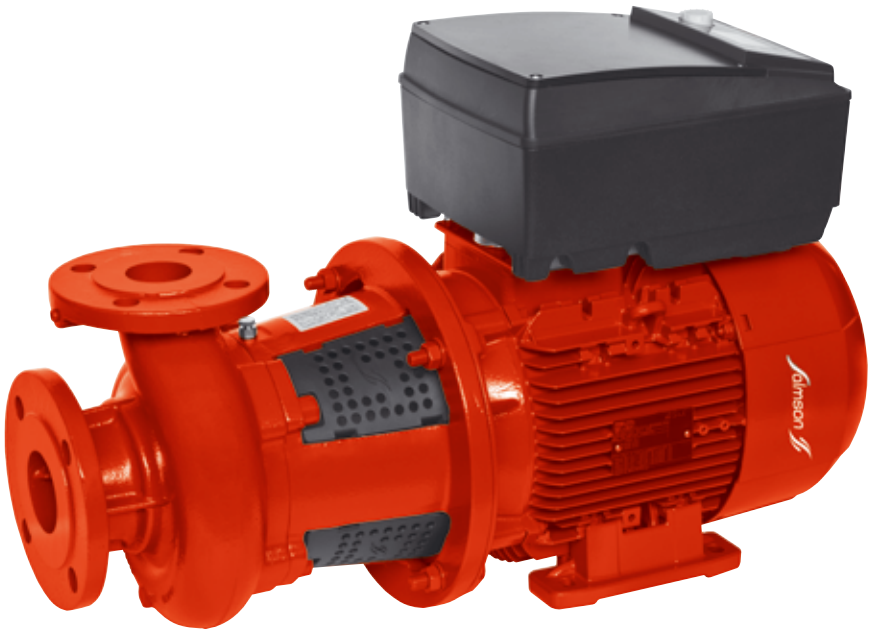

PBE

DESIGN

• Hydraulic section

- Standardised horizontal monobloc single stage centrifugal pump.
- Standardised flange connection
- Closed impeller
- Axial suction and vertical discharge

• Sealing

- Standardised mechanical seal

• Motor

- Standardised mechanical seal
- Ventilated motor IE2

Mains supply:	~400 V, 50/60 Hz
Insulation category:	155 (F)
Protection index:	IP55
Emission:	EN 61800-3
Immunity:	EN 61800-3

• Speed controller

- LCD screen
- Adjusted with a single button

IDENTIFICATION

PBE 203 - 14 / 2,2 - R1

Product ranges

Number of poles

Nominal diameter of discharge flange
03: 32mm
04: 45mm
05: 50 mm
06: 65 mm
08: 80 mm
10: 100 mm
12: 125 mm

Nominal diameter of impeller in mm

P2 power in kW

Without pressure sensor

BASIC CONSTRUCTION

Main parts	Material
Pump housing	Cast iron EN-GJL-250 or spheroidal cast iron EN-GJS-400-18-LT*
Lantern	Cast iron EN-GJL-250 or spheroidal cast iron EN-GJS-400-18-LT*
Motor shaft	Stainless steel 1.4122
Impeller	Cast iron EN-GJL-200 or bronze G-CuSn 10*
Mechanical seal	AQEGG

* Options, contact us

GENERAL PRESELECTION GRAPH

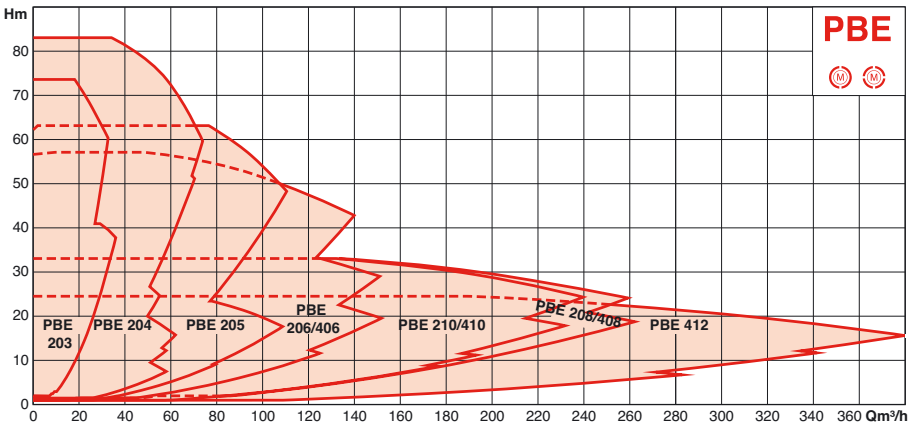

ELECTRONIC SPEED VARIATION

Description

1,5 - 7,5 kW

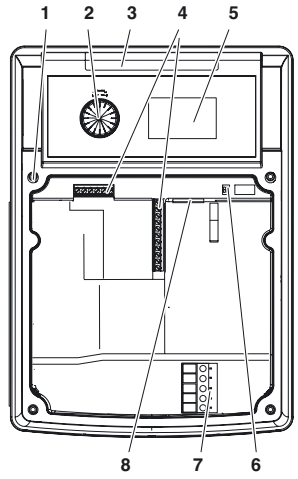

11 - 22 kW

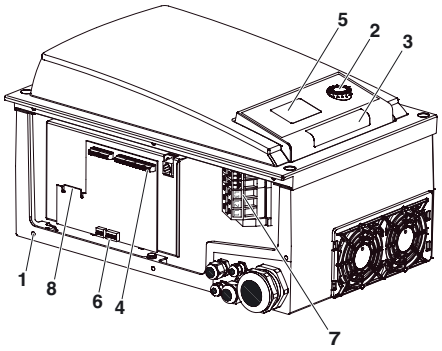

1 Lid attachment
2 Control button
3 Infra-red communication window
4 Control connectors
5 Display
6 Switches
7 Terminal power board
8 Interface for IF modules

Functionalities

Automatic modes
- Δp-c for constant differential pressure (with external DDG)
- PID control
- Manual adjustment mode (n = constant)

Security
- Integral motor protection with integrated electronic tripping device
- Access lock

Manual adjustments
- Adjustment of differential pressure indications
- Adjustment of rotation speed (adjustment mode)
- Adjustment of operating mode
- Adjustment of pump to ON/OFF
- Configuration of all the operating parameters
- Correction of errors

Double pump coordination (double pump or 2 single pumps)
- Main/reserve operating mode (automatic permutation in case of error)
- Main/reserve operating mode permutation of pumps after 24 hours
- Parallel operation
- Parallel operation (with optimisation of output according to requirements)

External control functions
- Control input “Priority Off”.
- Control input “Permutation of external pumps” (only active in double pump mode).
- Analogue input 0-10 V, 0–20 mA for adjustment mode (DDC) and remote adjustment of the set point.
- Analogue input 2-10 V, 4–20 mA for adjustment mode (DDC) and remote adjustment of the set point.
- Analogue input 0–10 V for the real value signal of the pressure sensor.
- Analogue input 2–10 V 0-20 mA, 4–20 mA for the real value signal of the pressure sensor.

Signalling and display
- Centralised fault forwarding SSM.
- Centralised operation forwarding SBM.

Data exchange
Infra-red interface for wireless data exchange with the pump control.
Position for IF Salmson modules (Modbus, BACnet, CAN, PLR, LON) for connection to centralised technical management.
Interface for double pump coordination.

PBE

ASSEMBLY POSITIONS

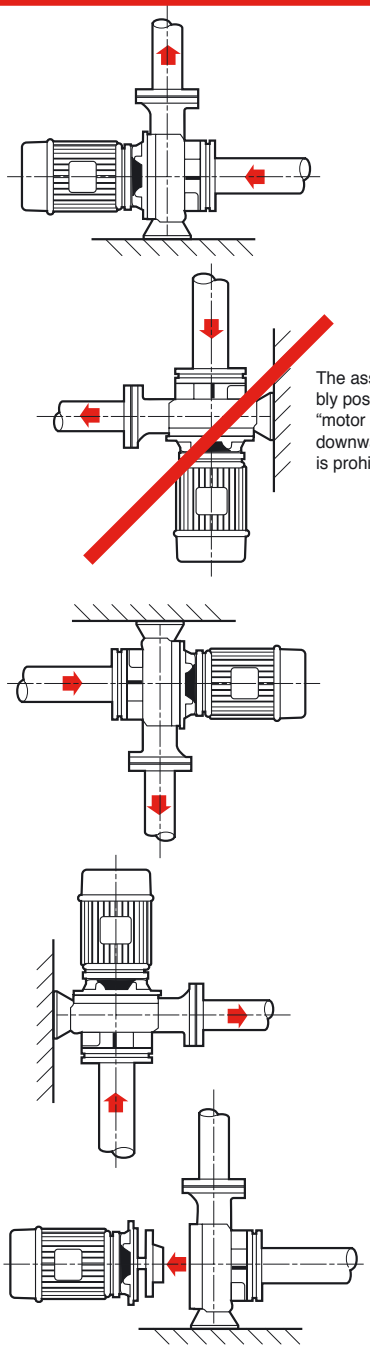

The assembly position "motor facing downwards" is prohibited.

RECOMMENDED ACCESSORIES

- **Differential pressure sensor** for R1 versions, measurement of 0 to 10 bars, 0-10 V outlet (to be installed at suction and discharge point of the pump along a straight section).

Kit made up of:
- Differential pressure sensor with 2m cable,
- Copper capillary with Ø 3 mm and 2 m length,
- Assembly accessories

Pump		Pressure sensor kit	
Reference	Description	Reference	Description
2126163	PBE203-14/2.2-R1	2137283	DDG40-9 PBE
2126164	PBE203-15/3-R1	2137283	DDG40-9 PBE
2126165	PBE203-16/4-R1	2137283	DDG40-9 PBE
2126166	PBE203-17/5.5-R1	2137286	DDG60-5 PBE
2126167	PBE203-21/7.5-R1	2137288	DDG100-2 PBE
2126168	PBE203-22/11-R1	2137289	DDG100-3 PBE
2126169	PBE204-11/1.5-R1	2137280	DDG20-10 PBE
2126170	PBE204-12/2.2-R1	2137280	DDG20-10 PBE
2126171	PBE204-13/3-R1	2137283	DDG40-9 PBE
2126172	PBE204-14/4-R1	2137283	DDG40-9 PBE
2126173	PBE204-16/5.5-R1	2137284	DDG40-10 PBE
2126174	PBE204-17/7.5-R1	2137286	DDG60-5 PBE
2126175	PBE204-18/7.5-R1	2137286	DDG60-5 PBE
2126176	PBE204-21/11-R1	2137287	DDG60-6 PBE
2126177	PBE204-22/15-R1	2137289	DDG100-3 PBE
2113494	PBE204-23/18.5-R1	2137289	DDG100-3 PBE
2126178	PBE204-24/22-R1	2137289	DDG100-3 PBE
2126179	PBE205-11/3-R1	2137280	DDG20-10 PBE
2126180	PBE205-12/4-R1	2137280	DDG20-10 PBE
2126181	PBE205-13/5.5-R1	2137284	DDG40-10 PBE
2126182	PBE205-14/7.5-R1	2137284	DDG40-10 PBE
2126183	PBE205-15/7.5-R1	2137284	DDG40-10 PBE
2126184	PBE205-17/11-R1	2137287	DDG60-6 PBE
2126185	PBE205-20/15-R1	2137287	DDG60-6 PBE
2126186	PBE205-21/18.5-R1	2137287	DDG60-6 PBE
2126187	PBE205-22/22-R1	2137289	DDG100-3 PBE
2126188	PBE405-27/5.5-R1	2137284	DDG40-10 PBE
2126189	PBE206-12/4-R1	2137280	DDG20-10 PBE
2126190	PBE206-13/5.5-R1	2137281	DDG20-11 PBE
2126191	PBE206-14/7.5-R1	2137284	DDG40-10 PBE
2126192	PBE206-16/11-R1	2137285	DDG40-11 PBE
2126193	PBE206-17/15-R1	2137285	DDG40-11 PBE
2126194	PBE206-19/18.5-R1	2137287	DDG60-6 PBE
2126195	PBE206-21/22-R1	2137287	DDG60-6 PBE
2126196	PBE406-24/5.5-R1	2137284	DDG40-10 PBE
2113533	PBE406-26.5/7.5-R1	2137284	DDG40-10 PBE
2126197	PBE208-14.5/11-R1	2137285	DDG40-11 PBE
2126198	PBE208-15/15-R1	2137285	DDG40-11 PBE
2126199	PBE208-16/18.5-R1	2137285	DDG40-11 PBE
2126200	PBE208-16.5/22-R1	2137285	DDG40-11 PBE
2126201	PBE408-22/5.5-R1	2137281	DDG20-11 PBE
2126202	PBE408-25/7.5-R1	2137284	DDG40-10 PBE
2126203	PBE408-27/11-R1	2137285	DDG40-11 PBE
2126204	PBE410-20/5.5-R1	2137281	DDG20-11 PBE
2126205	PBE410-22/7.5-R1	2137281	DDG20-11 PBE
2126206	PBE410-25/11-R1	2137282	DDG20-12 PBE
2126207	PBE410-27/15-R1	2137285	DDG40-11 PBE
2126208	PBE410-30.5/18.5-R1	2137285	DDG40-11 PBE
2126209	PBE410-31.5/22-R1	2137285	DDG40-11 PBE
2126210	PBE412-18.5/5.5-R1	2137281	DDG20-11 PBE
2126211	PBE412-21/7.5-R1	2137281	DDG20-11 PBE
2126212	PBE412-22.5/11-R1	2137282	DDG20-12 PBE
2126213	PBE412-25/15-R1	2137282	DDG20-12 PBE
2126214	PBE412-26/18.5-R1	2137285	DDG40-11 PBE
2126215	PBE412-27/22-R1	2137285	DDG40-11 PBE

NB: must not be connected to bosses in pumps such as LRE/JRE

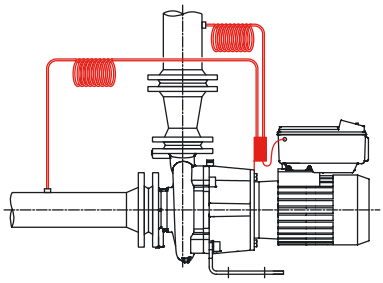

CHARACTERISTICS – MOTOR ≤ 4KW

Item reference	SAP reference	Motor	Suction DN1 (mm)	Discharge DN2 (mm)	Net mass (kg)	Operating pressure	PN flange	MEI	Nominal motor power (P2)	Number of poles	Speed range (rev/min)	Nominal intensity (A)	Voltage (V)	Frequency (Hz)	Cable gland
2126163	PBE203-14/2.2-R1	V1	50	32	47,5	13 bar (up to +140 °C) 16 bar (up to +120 °C)	PN16	≥0,1	2,2	2	750-2900	7,3	3~400 V ±10%	50/60 Hz	2xM12 1xM16 1xM20 1xM25
2126164	PBE203-15/3-R1	V1	50	32	60	13 bar (up to +140 °C) 16 bar (up to +120 °C)	PN16	≥0,1	3	2	750-2900	9	3~400 V ±10%	50/60 Hz	2xM12 1xM16 1xM20
2126165	PBE203-16/4-R1	V1	50	32	69	13 bar (up to +140 °C) 16 bar (up to +120 °C)	PN16	≥0,1	4	2	750-2900	11,7	3~400 V ±10%	50/60 Hz	2xM12 1xM16 1xM20 1xM25
2126169	PBE204-11/1.5-R1	V1	65	40	47,5	13 bar (up to +140 °C) 16 bar (up to +120 °C)	PN16	≥0,1	1,5	2	750-2900	5,6	3~400 V ±10%	50/60 Hz	2xM12 1xM16 1xM20 1xM25
2126170	PBE204-12/2.2-R1	V1	65	40	46	13 bar (up to +140 °C) 16 bar (up to +120 °C)	PN16	≥0,1	2,2	2	750-2900	7,2	3~400 V ±10%	50/60 Hz	2xM12 1xM16 1xM20 1xM25
2126171	PBE204-13/3-R1	V1	65	40	55	13 bar (up to +140 °C) 16 bar (up to +120 °C)	PN16	≥0,1	3	2	750-2900	8,9	3~400 V ±10%	50/60 Hz	2xM12 1xM16 1xM20 1xM25
2126172	PBE204-14/4-R1	V1	65	40	66	13 bar (up to +140 °C) 16 bar (up to +120 °C)	PN16	≥0,1	4	2	750-2900	11,3	3~400 V ±10%	50/60 Hz	2xM12 1xM16 1xM20 1xM25
2126179	PBE205-11/3-R1	V1	65	50	60	13 bar (up to +140 °C) 16 bar (up to +120 °C)	PN16	≥0,1	3	2	750-2900	8,7	3~400 V ±10%	50/60 Hz	2xM12 1xM16 1xM20 1xM25
2126180	PBE205-12/4-R1	V1	65	50	69	13 bar (up to +140 °C) 16 bar (up to +120 °C)	PN16	≥0,1	4	2	750-2900	11,5	3~400 V ±10%	50/60 Hz	2xM12 1xM16 1xM20 1xM25
2126189	PBE206-12/4-R1	V1	80	65	74	13 bar (up to +140 °C) 16 bar (up to +120 °C)	PN16	≥0,1	4	2	750-2900	10,7	3~400 V ±10%	50/60 Hz	2xM12 1xM16 1xM20 1xM25

PBE

CHARACTERISTICS – MOTOR ≤ 5,5KW

Item reference	SAP reference	Motor	Suction DN1 (mm)	Discharge DN2 (mm)	Net mass (kg)	Operating pressure	PN flange	MEI	Nominal power motor (P2)	Number of poles	Speed range (rev/min)	Nominal intensity (A)	Voltage (V)	Frequency (Hz)	Cable gland
2126166	PBE203-17/5.5-R1	B35	50	32	83	13 bar (up to +140 °C) - 16 bar (up to +120 °C)	PN16	≥0,1	5,5	2	750-2900	10,5	3~400 V ±10%	50/60 Hz	1xM12 2xM16 1xM20 1xM25
2126167	PBE203-21/7.5-R1	B35	50	32	99	13 bar (up to +140 °C) - 16 bar (up to +120 °C)	PN16	≥0,1	7,5	2	750-2900	13,5	3~400 V ±10%	50/60 Hz	1xM12 2xM16 1xM20 1xM25
2126168	PBE203-22/11-R1	B35	50	32	132	13 bar (up to +140 °C) - 16 bar (up to +120 °C)	PN16	≥0,1	11	2	750-2900	18,8	3~400 V ±10%	50/60 Hz	1xM12 2xM16 1xM20 1xM25
2126173	PBE204-16/5.5-R1	B35	65	40	86	13 bar (up to +140 °C) - 16 bar (up to +120 °C)	PN16	≥0,1	5,5	2	750-2900	11	3~400 V ±10%	50/60 Hz	1xM12 2xM16 1xM20 1xM25
2126174	PBE204-17/7.5-R1	B35	65	40	93	13 bar (up to +140 °C) - 16 bar (up to +120 °C)	PN16	≥0,1	7,5	2	750-2900	14	3~400 V ±10%	50/60 Hz	1xM12 2xM16 1xM20 1xM25
2126175	PBE204-18/7.5-R1	B35	65	40	107	13 bar (up to +140 °C) - 16 bar (up to +120 °C)	PN16	≥0,1	7,5	2	750-2900	14,1	3~400 V ±10%	50/60 Hz	1xM12 2xM16 1xM20 1xM25
2126176	PBE204-21/11-R1	B35	65	40	135	13 bar (up to +140 °C) - 16 bar (up to +120 °C)	PN16	≥0,1	11	2	750-2900	19,2	3~400 V ±10%	50/60 Hz	1xM12 2xM16 1xM20 1xM25
2126177	PBE204-22/15-R1	B35	65	40	143	13 bar (up to +140 °C) - 16 bar (up to +120 °C)	PN16	≥0,1	15	2	750-2900	25	3~400 V ±10%	50/60 Hz	1xM12 2xM16 1xM20 1xM25
2113494	PBE204-23/18.5-R1	B35	65	40	0	13 bar (up to +140 °C) - 16 bar (up to +120 °C)	PN16	≥0,1	18,5	2	750-2900	34,2	3~400 V ±10%	50/60 Hz	1xM12 2xM16 1xM20 1xM25
2126178	PBE204-24/22-R1	B35	65	40	199	13 bar (up to +140 °C) - 16 bar (up to +120 °C)	PN16	≥0,1	22	2	750-2900	39,5	3~400 V ±10%	50/60 Hz	1xM12 2xM16 1xM20 1xM25
2126181	PBE205-13/5.5-R1	B35	65	50	81	13 bar (up to +140 °C) - 16 bar (up to +120 °C)	PN16	≥0,1	5,5	2	750-2900	10,7	3~400 V ±10%	50/60 Hz	1xM12 2xM16 1xM20 1xM25
2126182	PBE205-14/7.5-R1	B35	65	50	88	13 bar (up to +140 °C) - 16 bar (up to +120 °C)	PN16	≥0,1	7,5	2	750-2900	13,8	3~400 V ±10%	50/60 Hz	1xM12 2xM16 1xM20 1xM25
2126183	PBE205-15/7.5-R1	B35	65	50	96	13 bar (up to +140 °C) - 16 bar (up to +120 °C)	PN16	≥0,1	7,5	2	750-2900	14,3	3~400 V ±10%	50/60 Hz	1xM12 2xM16 1xM20 1xM25
2126184	PBE205-17/11-R1	B35	65	50	120	13 bar (up to +140 °C) - 16 bar (up to +120 °C)	PN16	≥0,1	11	2	750-2900	20,9	3~400 V ±10%	50/60 Hz	1xM12 2xM16 1xM20 1xM25
2126185	PBE205-20/15-R1	B35	65	50	144	13 bar (up to +140 °C) - 16 bar (up to +120 °C)	PN16	≥0,1	15	2	750-2900	26,9	3~400 V ±10%	50/60 Hz	1xM12 2xM16 1xM20 1xM25
2126186	PBE205-21/18.5-R1	B35	65	50	161	13 bar (up to +140 °C) - 16 bar (up to +120 °C)	PN16	≥0,1	18,5	2	750-2900	32,3	3~400 V ±10%	50/60 Hz	1xM12 2xM16 1xM20 1xM25
2126187	PBE205-22/22-R1	B35	65	50	191	13 bar (up to +140 °C) - 16 bar (up to +120 °C)	PN16	≥0,1	22	2	750-2900	39,2	3~400 V ±10%	50/60 Hz	1xM12 2xM16 1xM20 1xM25
2126190	PBE206-13/5.5-R1	B35	80	65	74	13 bar (up to +140 °C) - 16 bar (up to +120 °C)	PN16	≥0,1	5,5	2	750-2900	11	3~400 V ±10%	50/60 Hz	1xM12 2xM16 1xM20 1xM25
2126191	PBE206-14/7.5-R1	B35	80	65	85	13 bar (up to +140 °C) - 16 bar (up to +120 °C)	PN16	≥0,1	7,5	2	750-2900	14,1	3~400 V ±10%	50/60 Hz	1xM12 2xM16 1xM20 1xM25
2126192	PBE206-16/11-R1	B35	80	65	139	13 bar (up to +140 °C) - 16 bar (up to +120 °C)	PN16	≥0,1	11	2	750-2900	20,1	3~400 V ±10%	50/60 Hz	1xM12 2xM16 1xM20 1xM25
2126193	PBE206-17/15-R1	B35	80	65	133	13 bar (up to +140 °C) - 16 bar (up to +120 °C)	PN16	≥0,1	15	2	750-2900	26,7	3~400 V ±10%	50/60 Hz	1xM12 2xM16 1xM20 1xM25
2126194	PBE206-19/18.5-R1	B35	80	65	167	13 bar (up to +140 °C) - 16 bar (up to +120 °C)	PN16	≥0,1	18,5	2	750-2900		3~400 V ±10%	50/60 Hz	1xM12 2xM16 1xM20 1xM25
2126195	PBE206-21/22-R1	B35	80	65	200	13 bar (up to +140 °C) - 16 bar (up to +120 °C)	PN16	≥0,1	22	2	750-2900		3~400 V ±10%	50/60 Hz	1xM12 2xM16 1xM20 1xM25

CHARACTERISTICS – MOTOR ≤ 5,5KW

Item reference	SAP reference	Motor	Suction DN1 (mm)	Discharge DN2 (mm)	Net mass (kg)	Operating pressure	PN flange	MEI	Nominal power motor (P2)	Number of poles	Speed range (rev/min)	Nominal intensity (A)	Voltage (V)	Frequency (Hz)	Cable gland
2126197	PBE208-14.5/11-R1	B35	100	80	136	13 bar (up to +140 °C) - 16 bar (up to +120 °C)	PN16	≥0,1	11	2	750-2900	20,6	3~400 V ±10%	50/60 Hz	1xM12 2xM16 1xM20 1xM25
2126198	PBE208-15/15-R1	B35	100	80	143	13 bar (up to +140 °C) - 16 bar (up to +120 °C)	PN16	≥0,1	15	2	750-2900	27,8	3~400 V ±10%	50/60 Hz	1xM12 2xM16 1xM20 1xM25
2126199	PBE208-16/18.5-R1	B35	100	80	160	13 bar (up to +140 °C) - 16 bar (up to +120 °C)	PN16	≥0,1	18,5	2	750-2900	32,6	3~400 V ±10%	50/60 Hz	1xM12 2xM16 1xM20 1xM25
2126200	PBE208-16.5/22-R1	B35	100	80	190	13 bar (up to +140 °C) - 16 bar (up to +120 °C)	PN16	≥0,1	22	2	750-2900	38,8	3~400 V ±10%	50/60 Hz	1xM12 2xM16 1xM20 1xM25
2126188	PBE405-27/5.5-R1	B35	65	50	111	13 bar (up to +140 °C) - 16 bar (up to +120 °C)	PN16	≥0,1	5,5	4	380-1450	10,7	3~400 V ±10%	50/60 Hz	1xM12 2xM16 1xM20 1xM25
2126196	PBE406-24/5.5-R1	B35	80	65	120	13 bar (up to +140 °C) - 16 bar (up to +120 °C)	PN16	≥0,1	5,5	4	380-1450	10,8	3~400 V ±10%	50/60 Hz	1xM12 2xM16 1xM20 1xM25
2113533	PBE406-26.5/7.5-R1	B35	80	65	0	13 bar (up to +140 °C) - 16 bar (up to +120 °C)	PN16	≥0,1	7,5	4	750-2900	13,9	3~400 V ±10%	50/60 Hz	1xM12 2xM16 1xM20 1xM25
2126201	PBE408-22/5.5-R1	B35	100	80	118	13 bar (up to +140 °C) - 16 bar (up to +120 °C)	PN16	≥0,1	5,5	4	380-1450	10,9	3~400 V ±10%	50/60 Hz	1xM12 2xM16 1xM20 1xM25
2126202	PBE408-25/7.5-R1	B35	100	80	142	13 bar (up to +140 °C) - 16 bar (up to +120 °C)	PN16	≥0,1	7,5	4	380-1450		3~400 V ±10%	50/60 Hz	1xM12 2xM16 1xM20 1xM25
2126203	PBE408-27/11-R1	B35	100	80	171	13 bar (up to +140 °C) - 16 bar (up to +120 °C)	PN16	≥0,1	11	4	380-1450		3~400 V ±10%	50/60 Hz	1xM12 2xM16 1xM20 1xM25
2126204	PBE410-20/5.5-R1	B35	125	100	125	13 bar (up to +140 °C) - 16 bar (up to +120 °C)	PN16	≥0,1	5,5	4	380-1450	10,5	3~400 V ±10%	50/60 Hz	1xM12 2xM16 1xM20 1xM25
2126205	PBE410-22/7.5-R1	B35	125	100	138	13 bar (up to +140 °C) - 16 bar (up to +120 °C)	PN16	≥0,1	7,5	4	380-1450	13,6	3~400 V ±10%	50/60 Hz	1xM12 2xM16 1xM20 1xM25
2126206	PBE410-25/11-R1	B35	125	100	183	13 bar (up to +140 °C) - 16 bar (up to +120 °C)	PN16	≥0,1	11	4	380-1450		3~400 V ±10%	50/60 Hz	1xM12 2xM16 1xM20 1xM25
2126207	PBE410-27/15-R1	B35	125	100	207	13 bar (up to +140 °C) - 16 bar (up to +120 °C)	PN16	≥0,1	15	4	380-1450		3~400 V ±10%	50/60 Hz	1xM12 2xM16 1xM20 1xM25
2126208	PBE410-30.5/18.5-R1	B35	125	100	250	13 bar (up to +140 °C) - 16 bar (up to +120 °C)	PN16	≥0,1	18,5	4	380-1450	32	3~400 V ±10%	50/60 Hz	1xM12 2xM16 1xM20 1xM25
2126209	PBE410-31.5/22-R1	B35	125	100	267	13 bar (up to +140 °C) - 16 bar (up to +120 °C)	PN16	≥0,1	22	4	380-1450	37,7	3~400 V ±10%	50/60 Hz	1xM12 2xM16 1xM20 1xM25
2126210	PBE412-18.5/5.5-R1	B35	150	125	151	13 bar (up to +140 °C) - 16 bar (up to +120 °C)	PN16	≥0,1	5,5	4	380-1450		3~400 V ±10%	50/60 Hz	1xM12 2xM16 1xM20 1xM25
2126211	PBE412-21/7.5-R1	B35	150	125	164	13 bar (up to +140 °C) - 16 bar (up to +120 °C)	PN16	≥0,1	7,5	4	380-1450		3~400 V ±10%	50/60 Hz	1xM12 2xM16 1xM20 1xM25
2126212	PBE412-22.5/11-R1	B35	150	125	191	13 bar (up to +140 °C) - 16 bar (up to +120 °C)	PN16	≥0,1	11	4	380-1450		3~400 V ±10%	50/60 Hz	1xM12 2xM16 1xM20 1xM25
2126213	PBE412-24.5/15-R1	B35	150	125	247	13 bar (up to +140 °C) - 16 bar (up to +120 °C)	PN16	≥0,1	15	4	380-1450	27	3~400 V ±10%	50/60 Hz	1xM12 2xM16 1xM20 1xM25
2126214	PBE412-26.5/18.5-R1	B35	150	125	271	13 bar (up to +140 °C) - 16 bar (up to +120 °C)	PN16	≥0,1	18,5	4	380-1450	33,5	3~400 V ±10%	50/60 Hz	1xM12 2xM16 1xM20 1xM25
2126215	PBE412-27.5/22-R1	B35	150	125	287	13 bar (up to +140 °C) - 16 bar (up to +120 °C)	PN16	≥0,1	22	4	380-1450	38,3	3~400 V ±10%	50/60 Hz	1xM12 2xM16 1xM20 1xM25

PBE

HYDRAULIC PERFORMANCES

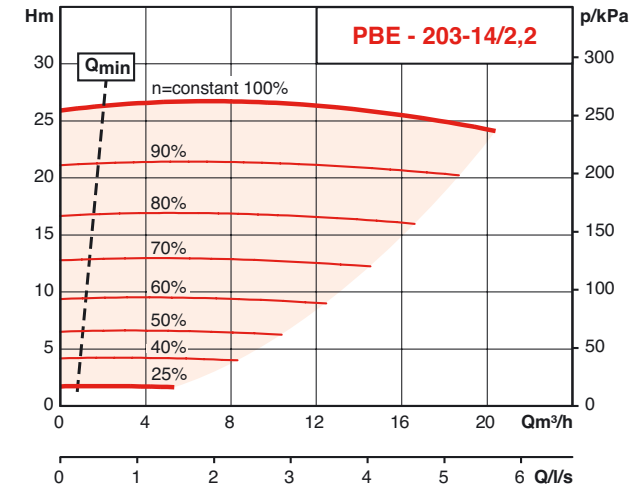

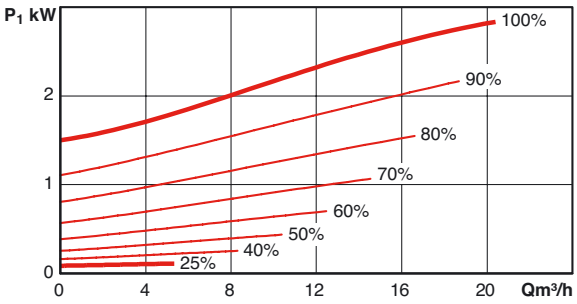

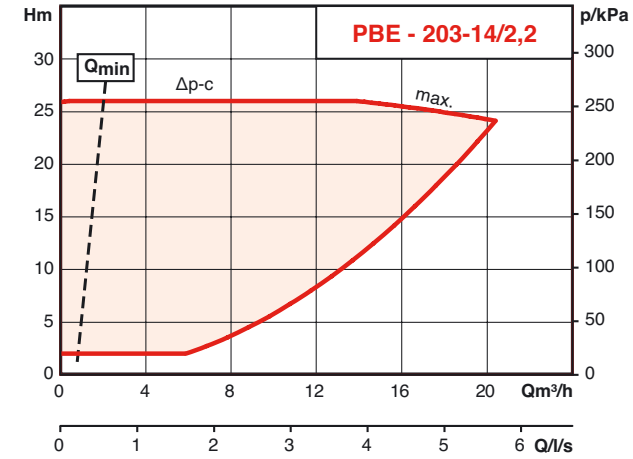

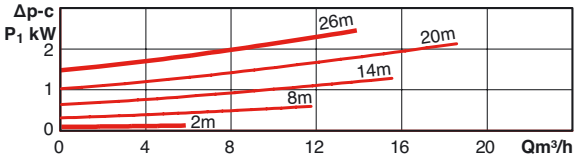

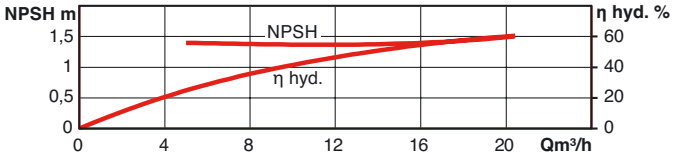

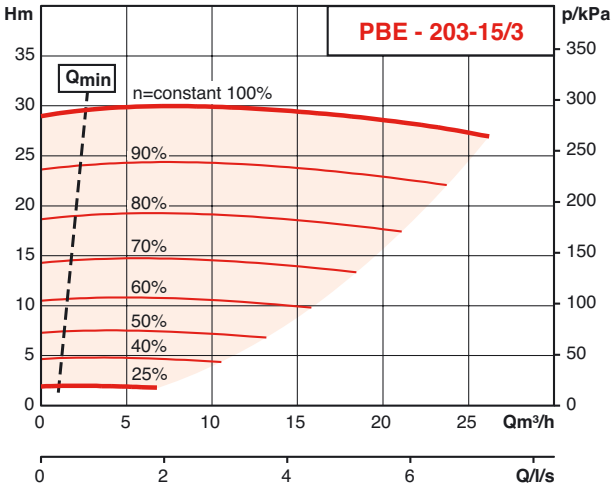

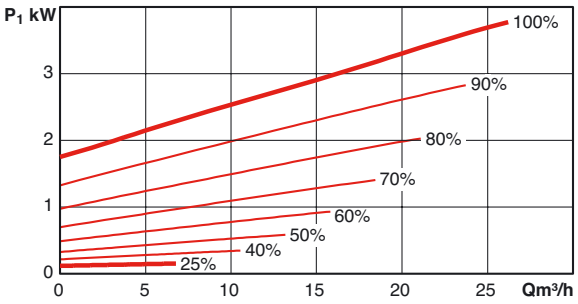

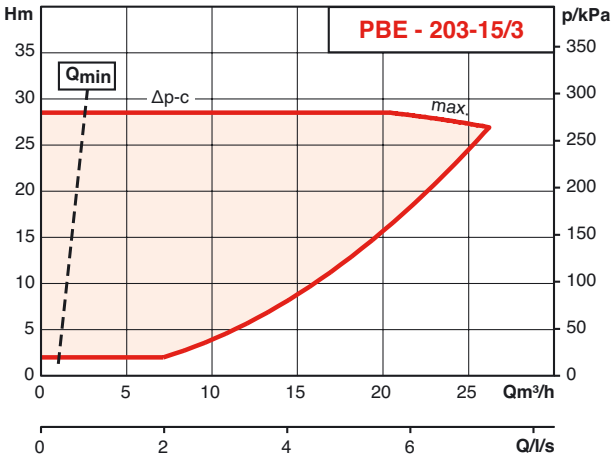

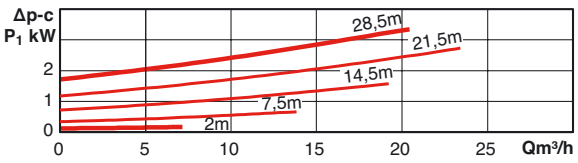

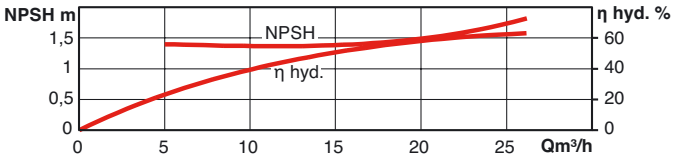

HYDRAULIC PERFORMANCES

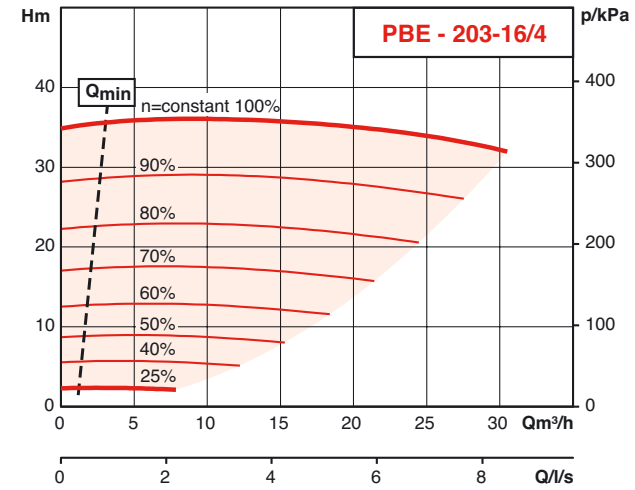

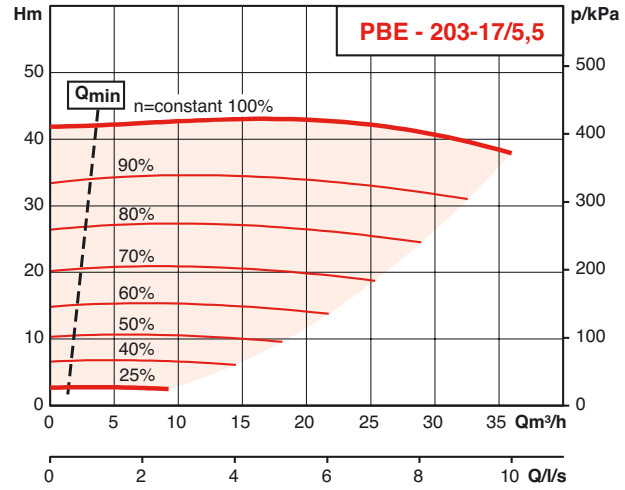

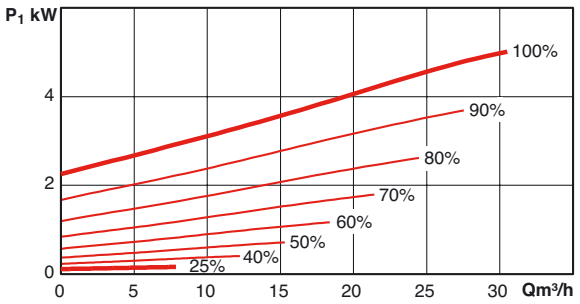

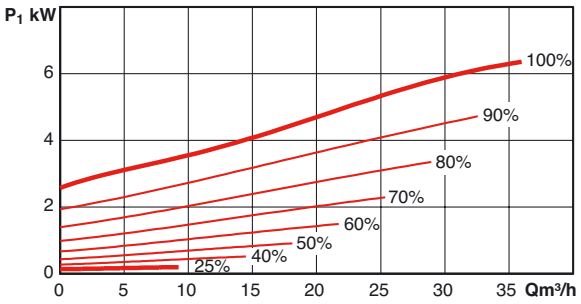

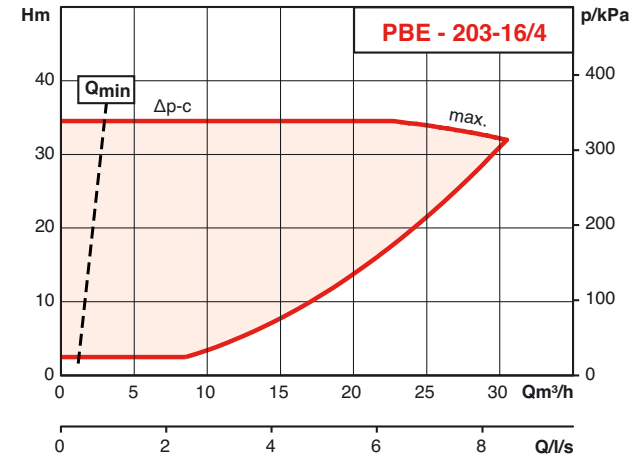

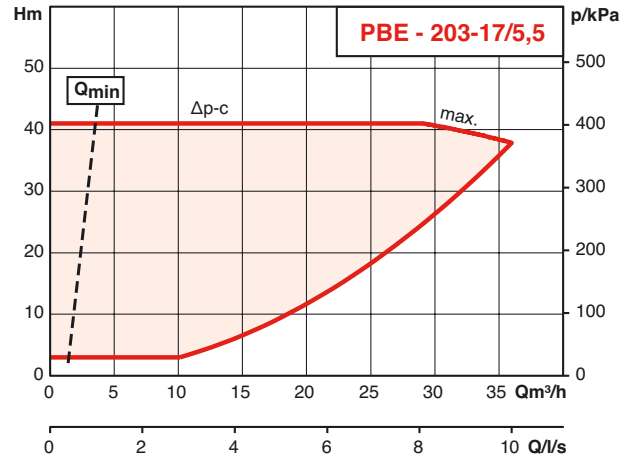

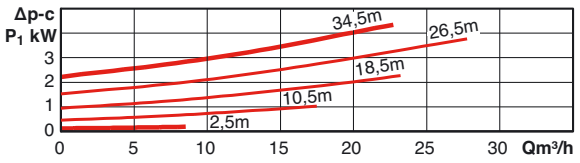

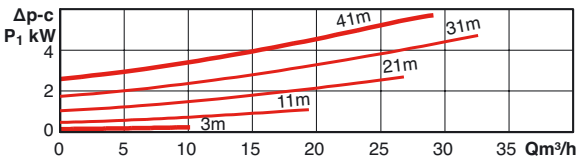

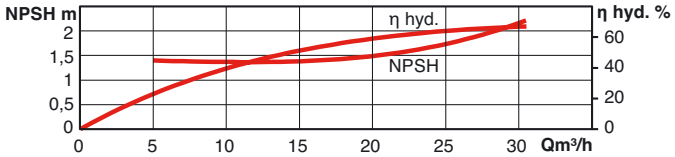

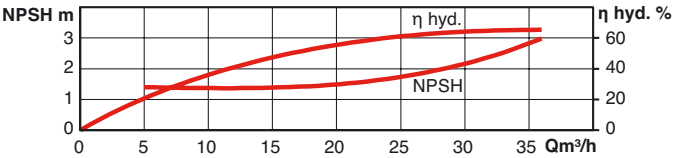

PBE

HYDRAULIC PERFORMANCES

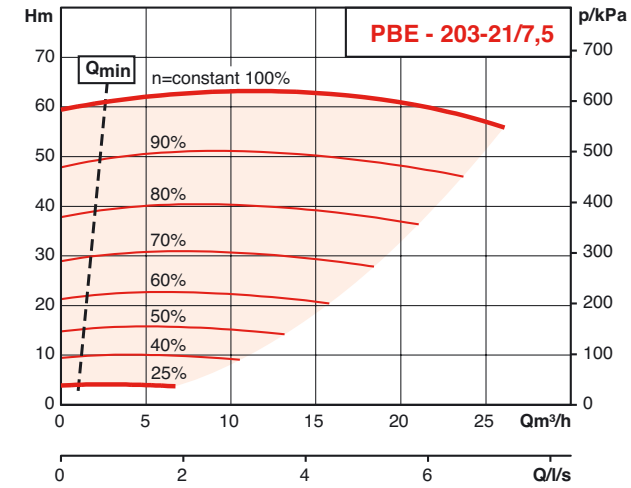

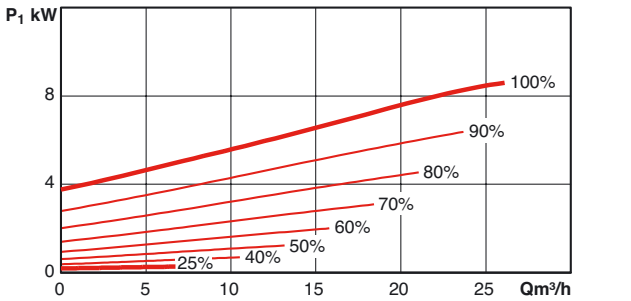

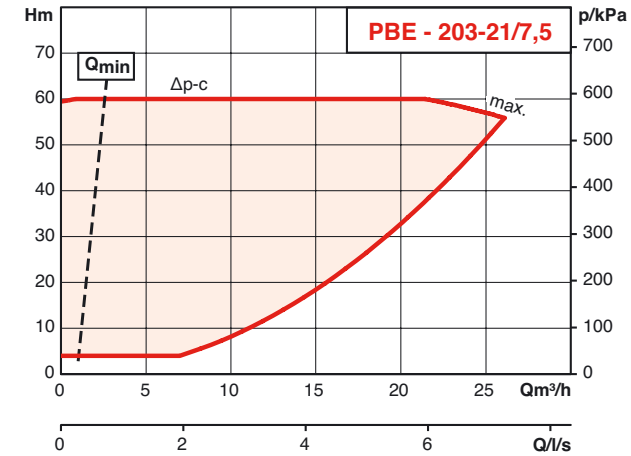

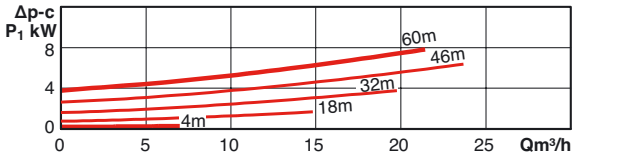

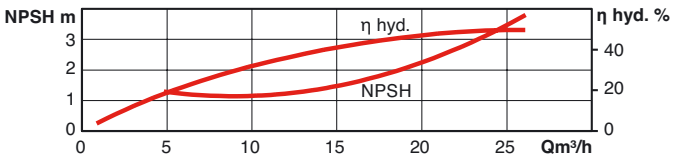

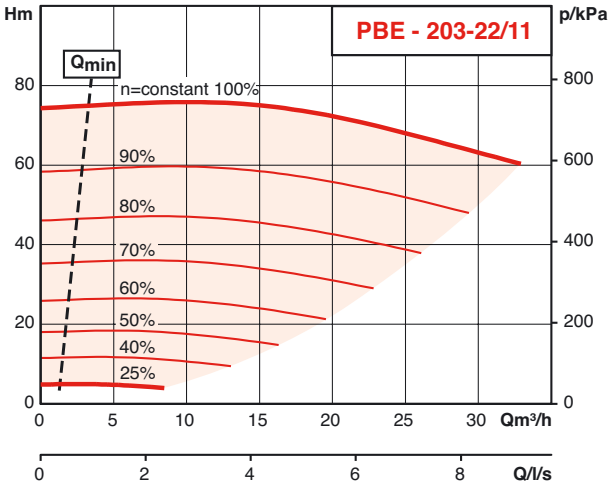

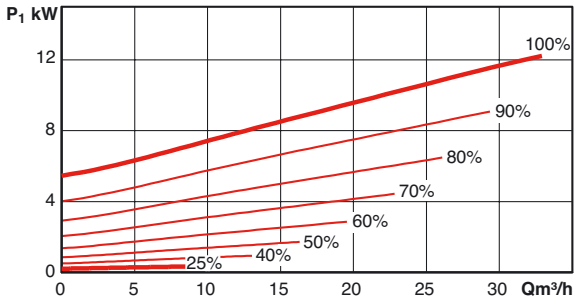

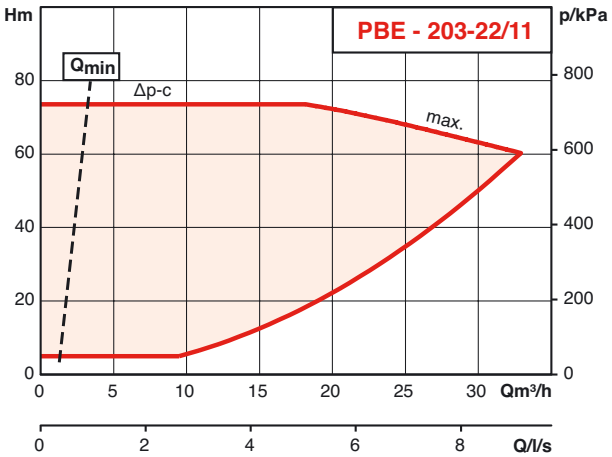

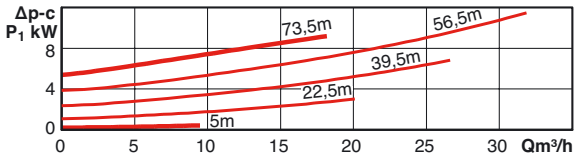

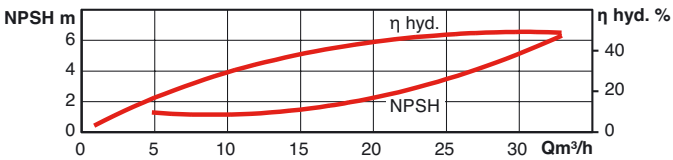

HYDRAULIC PERFORMANCES

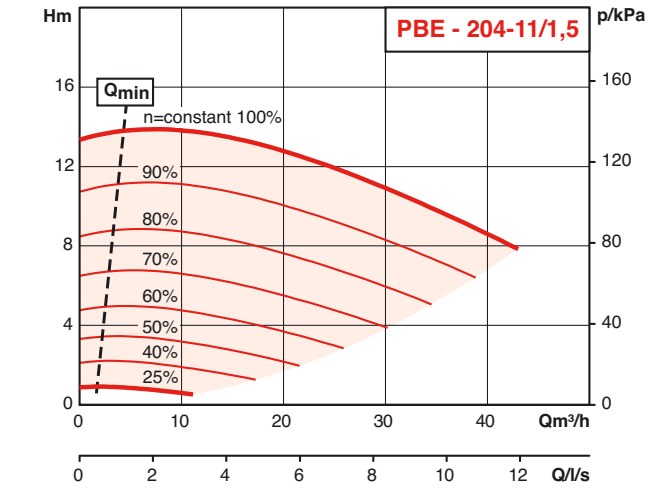

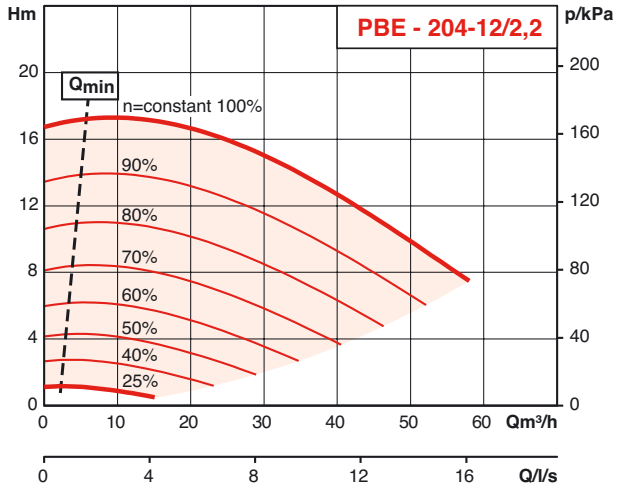

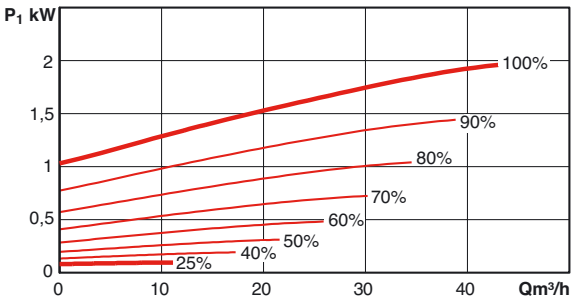

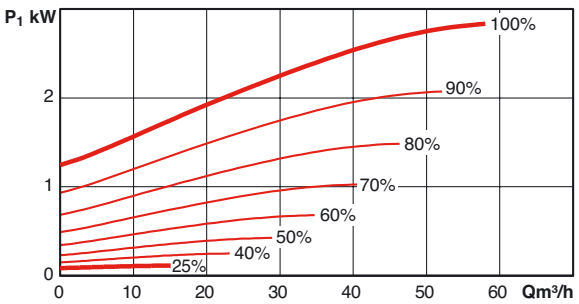

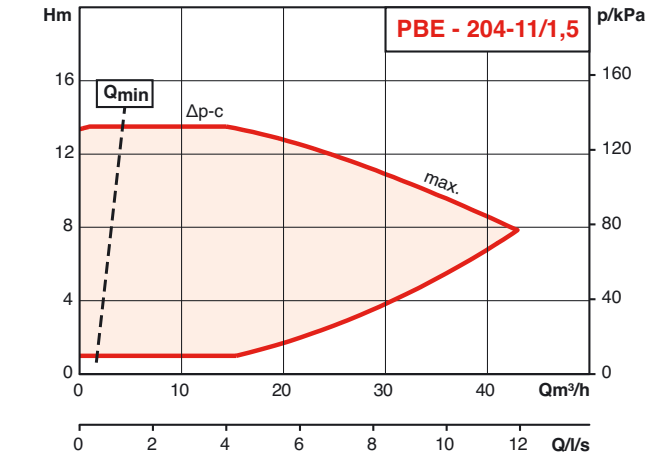

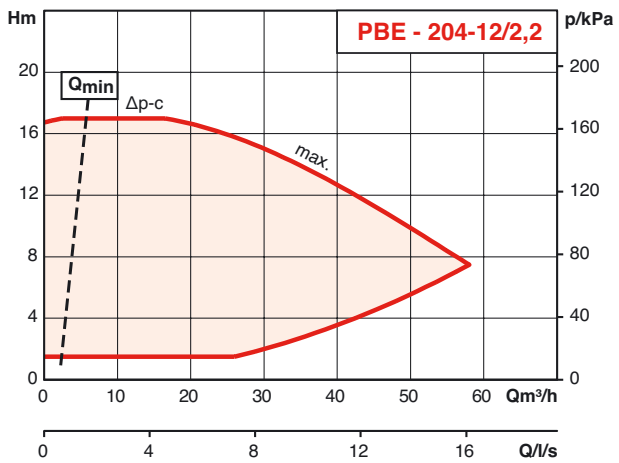

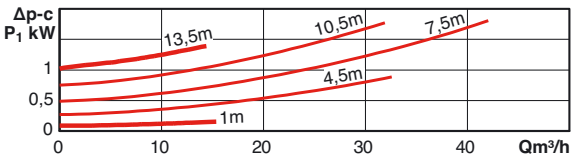

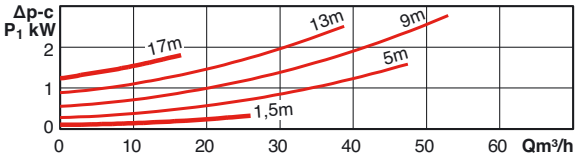



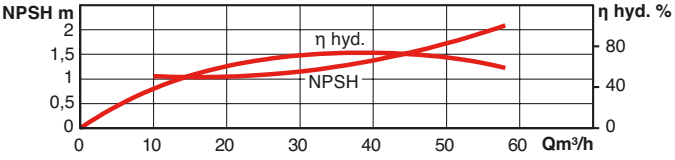

PBE

HYDRAULIC PERFORMANCES

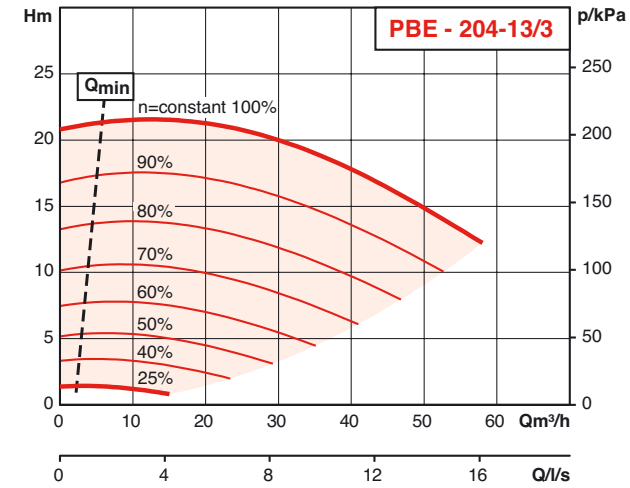

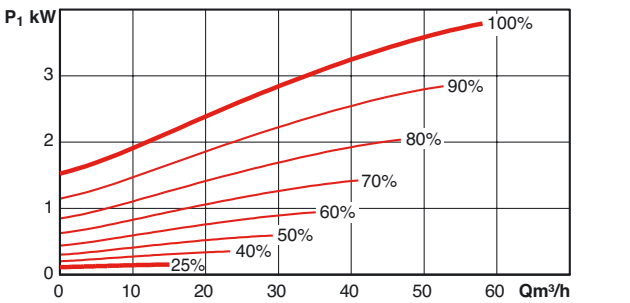

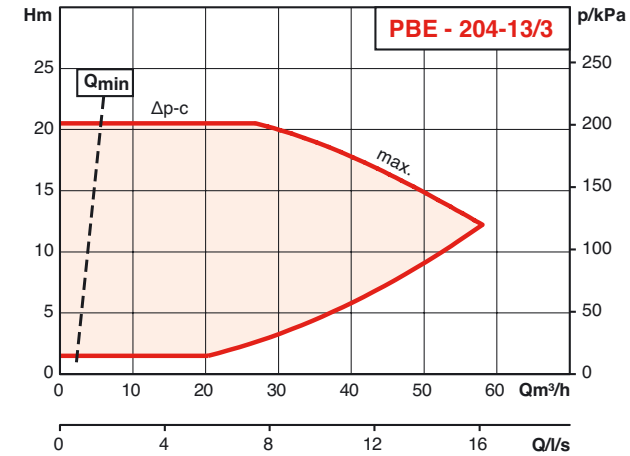

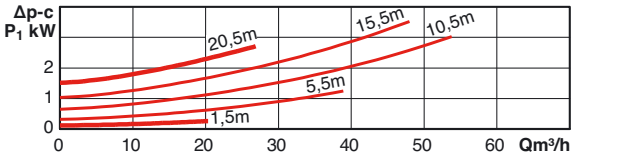

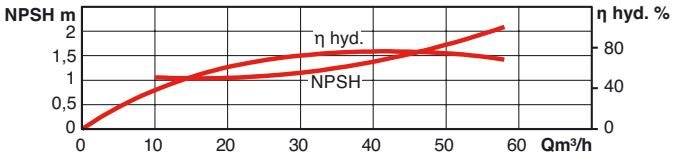

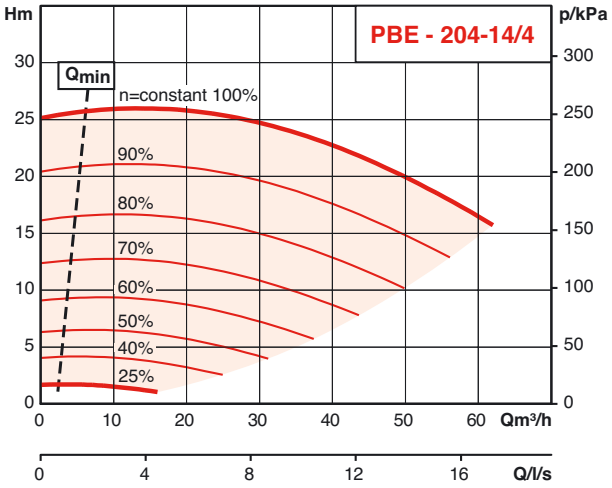

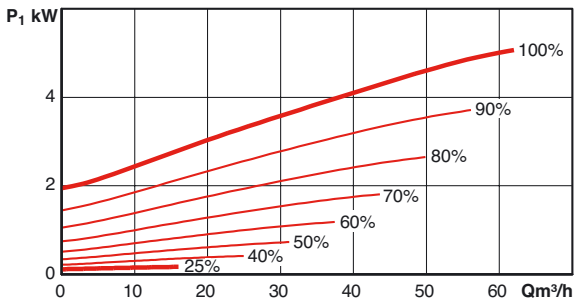

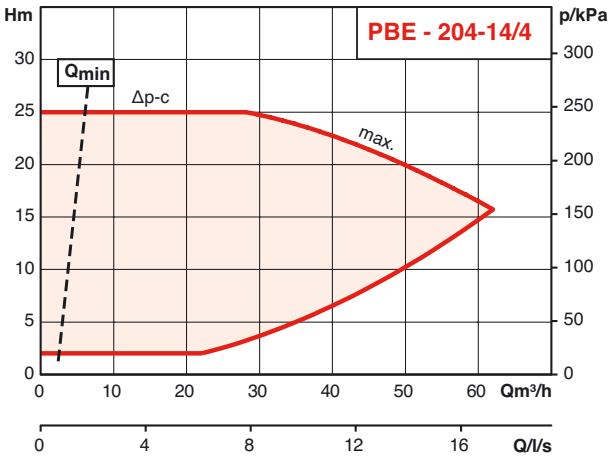

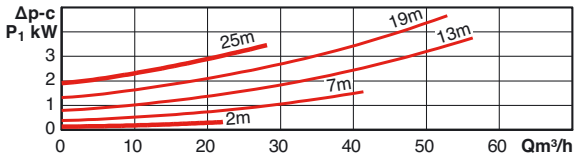

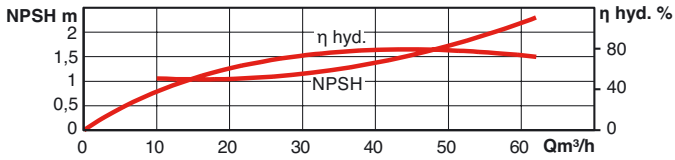

HYDRAULIC PERFORMANCES

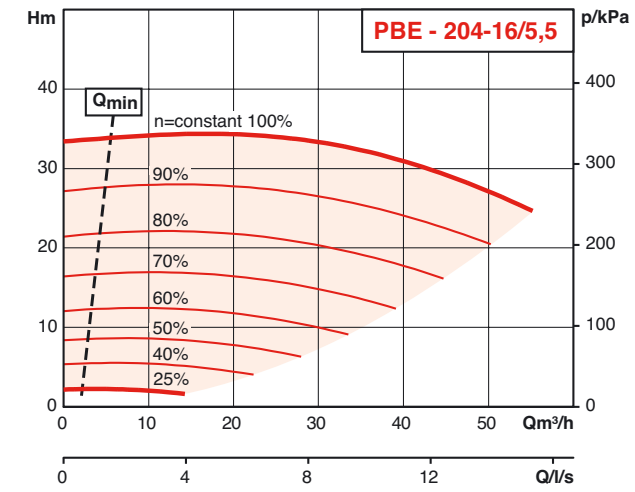

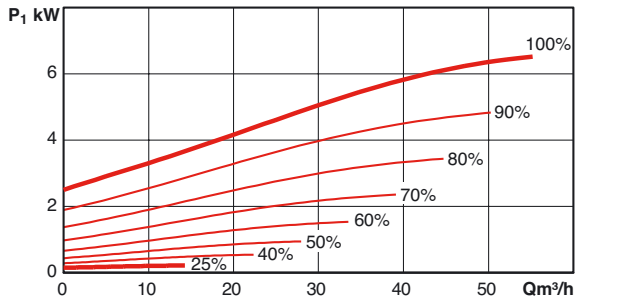

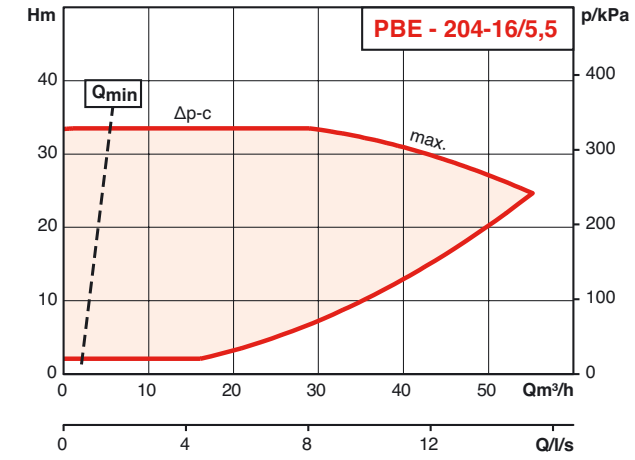

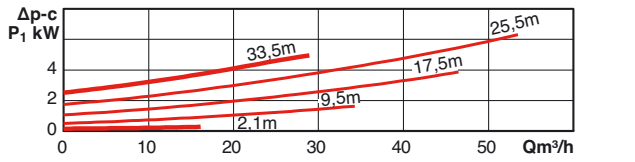

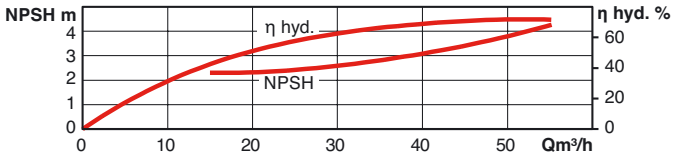

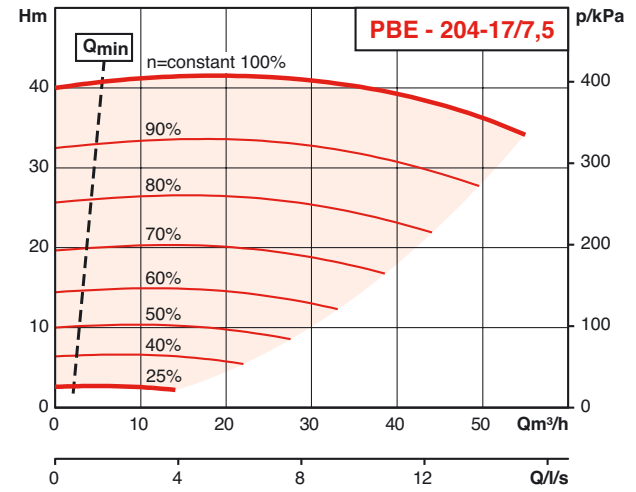

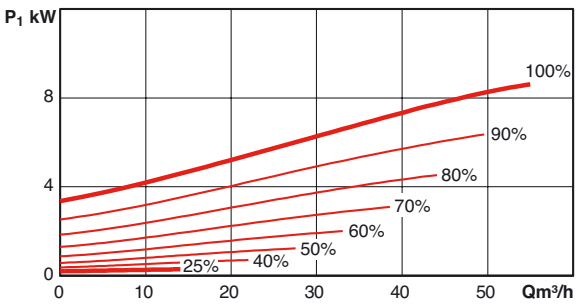

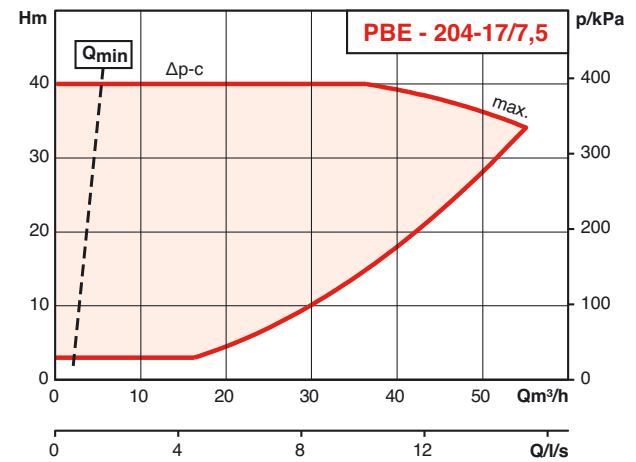

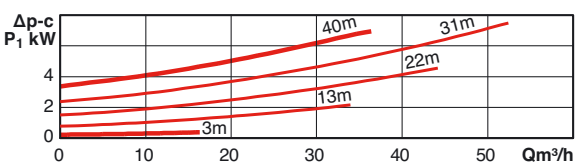

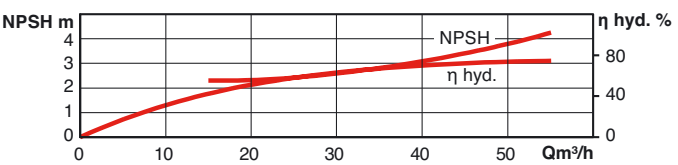

PBE

HYDRAULIC PERFORMANCES

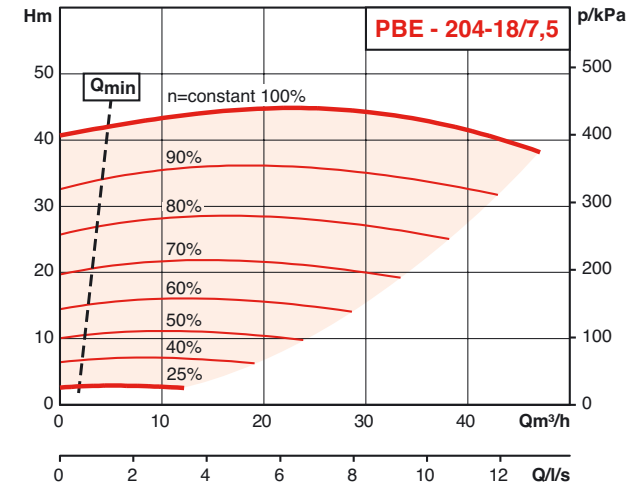

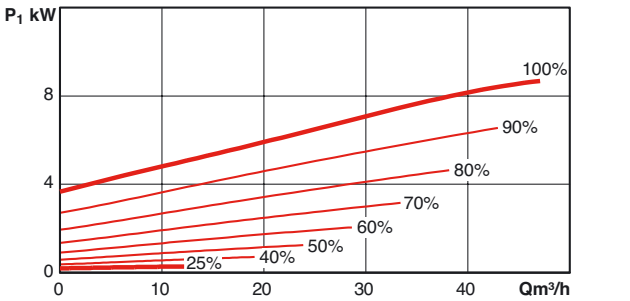

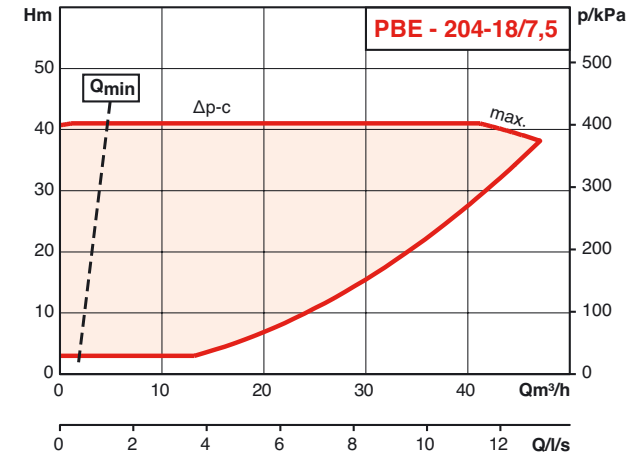

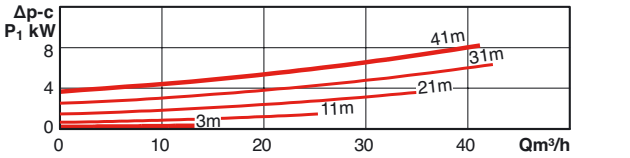

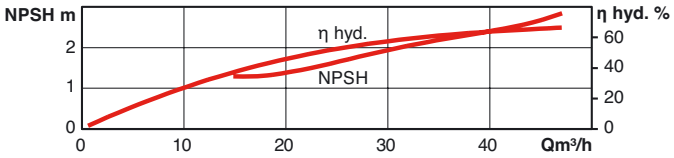

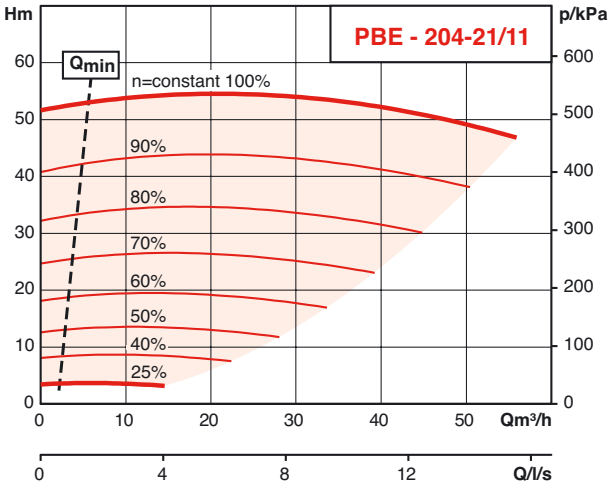

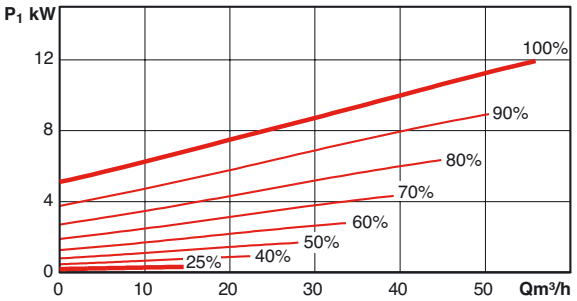

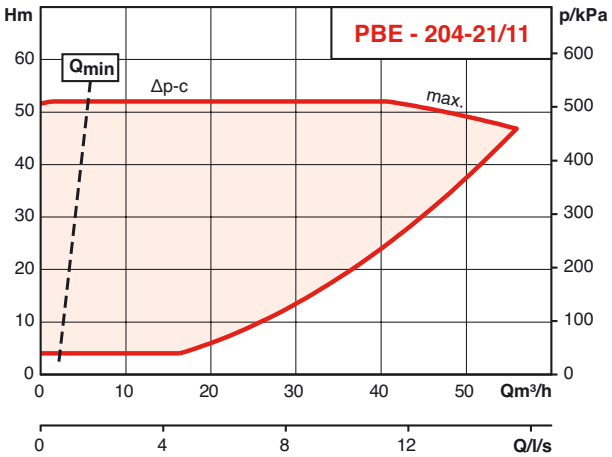

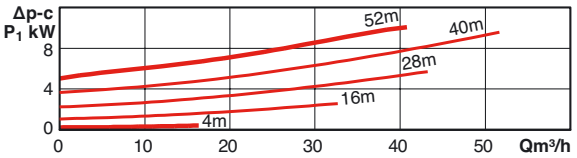

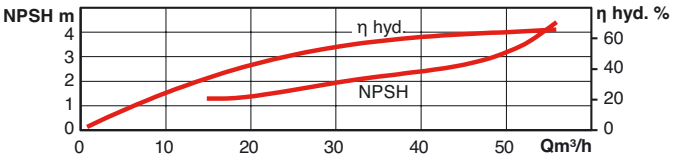

HYDRAULIC PERFORMANCES

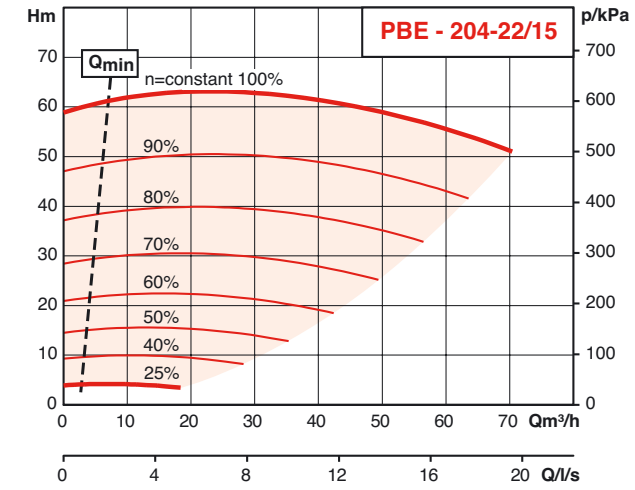

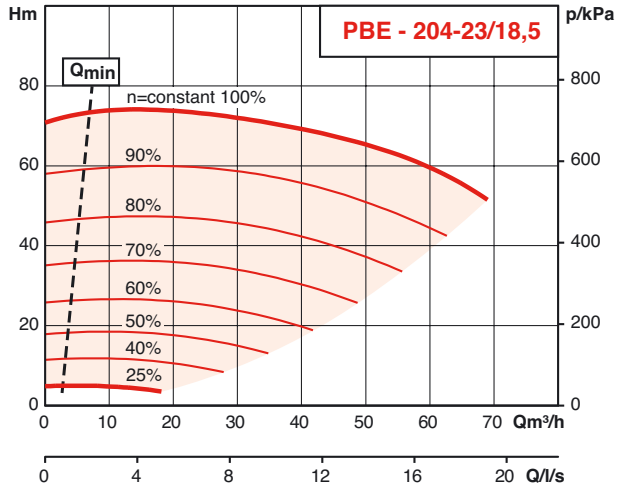

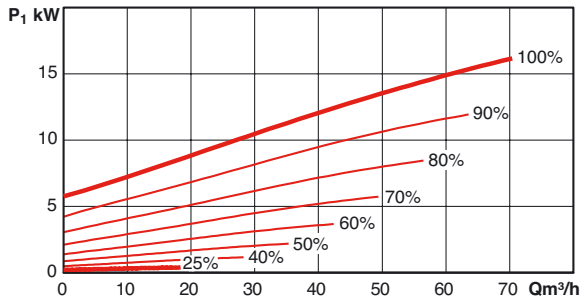

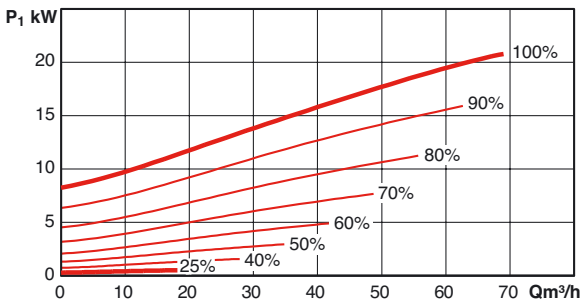

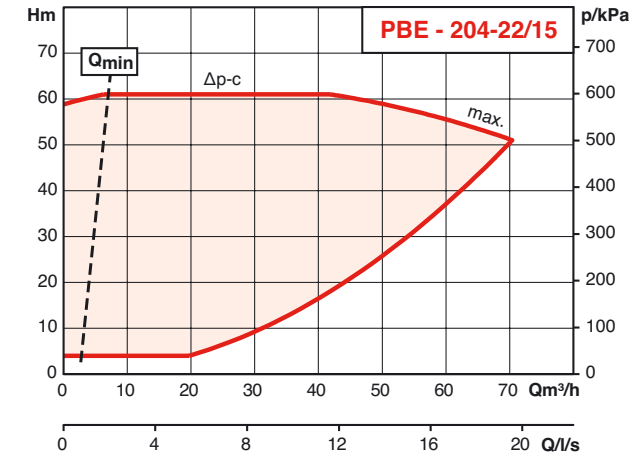

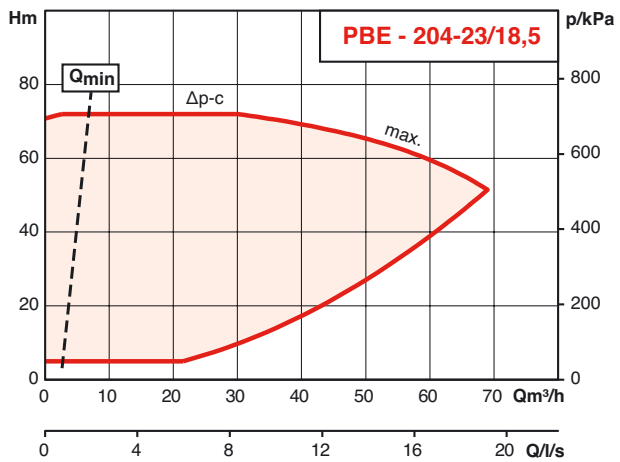

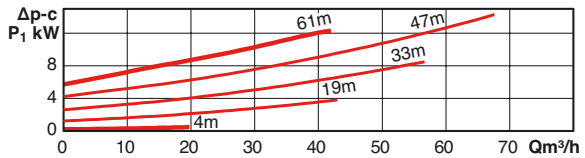

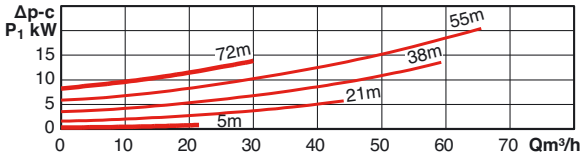

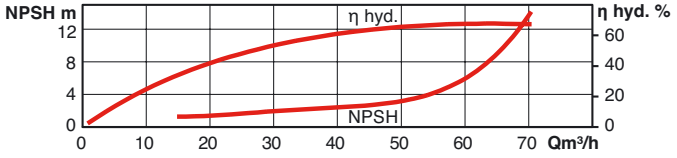

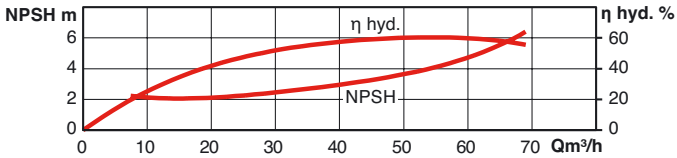

PBE

HYDRAULIC PERFORMANCES

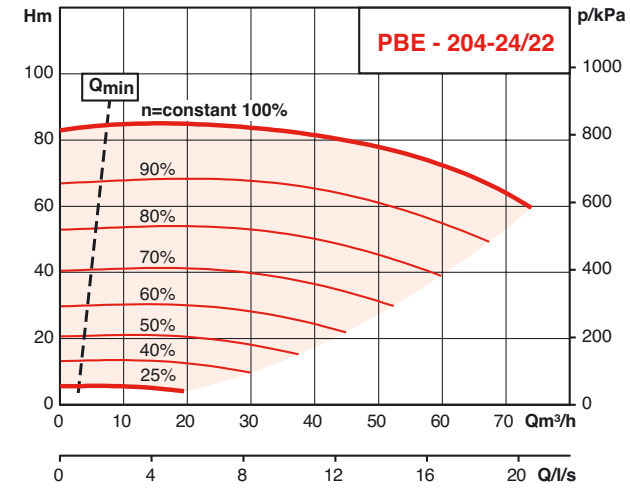

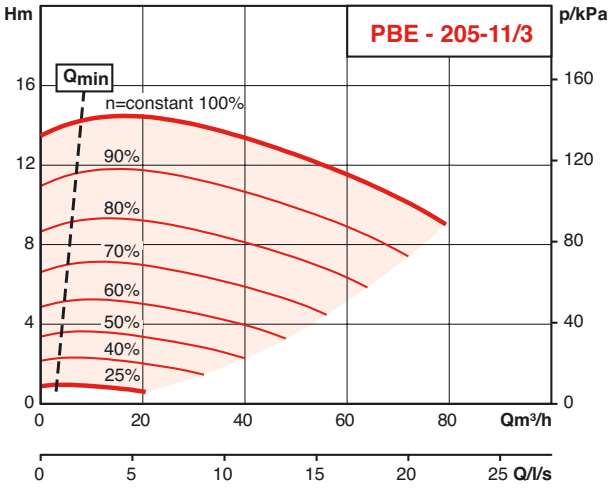

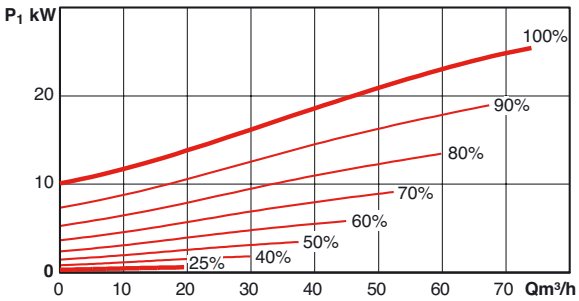

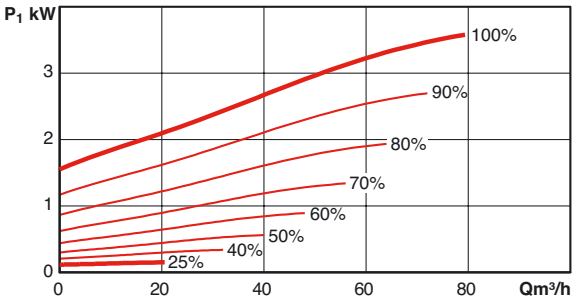

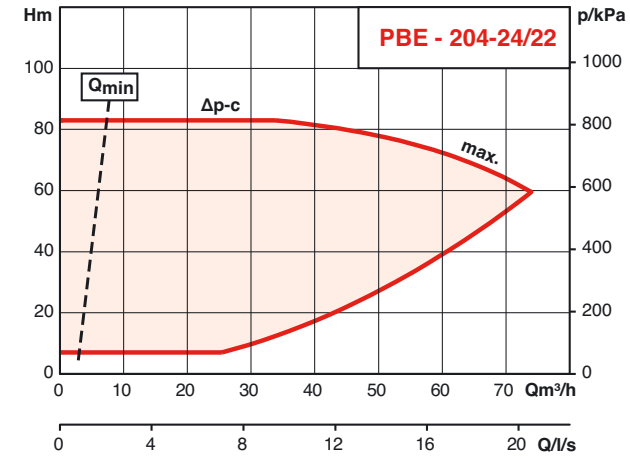

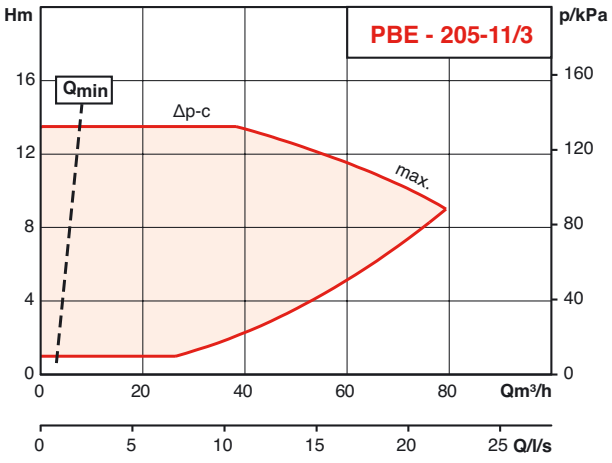

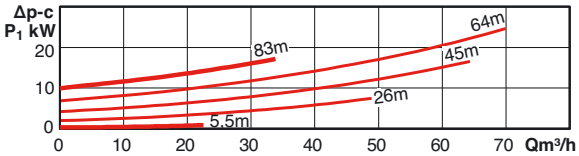

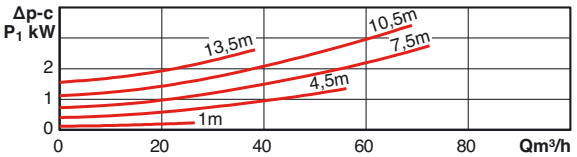

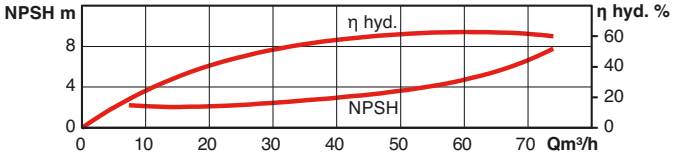

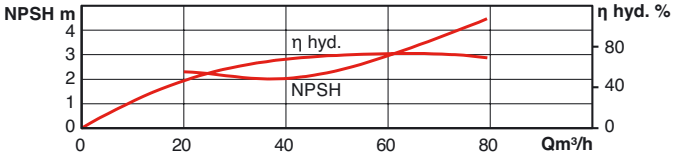

HYDRAULIC PERFORMANCES

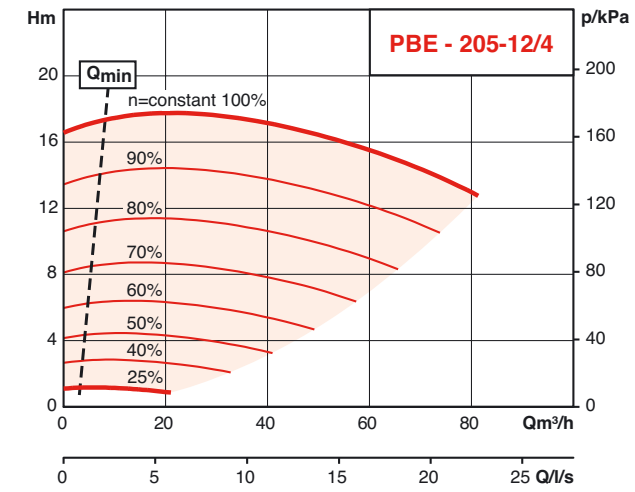

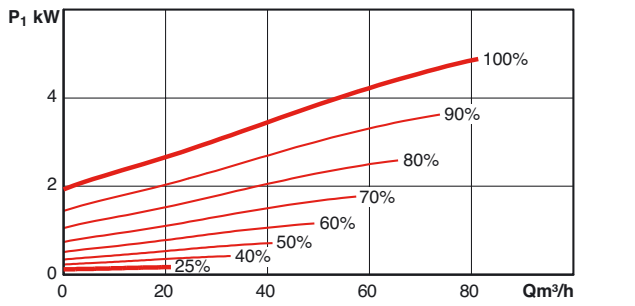

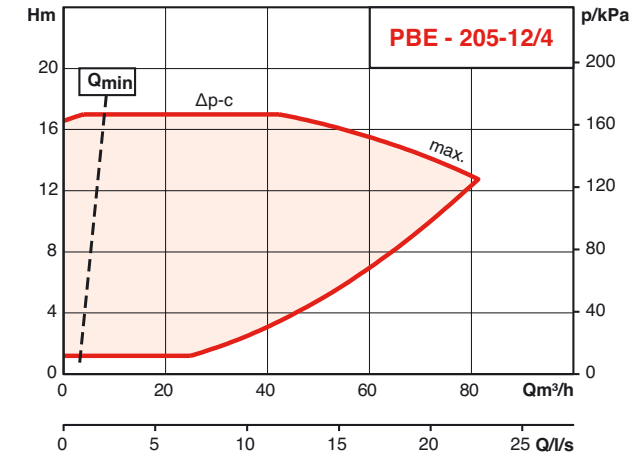

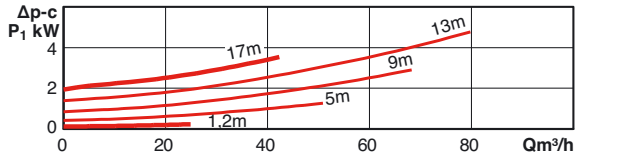

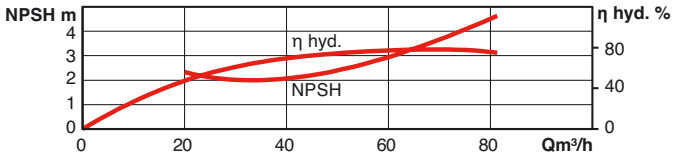

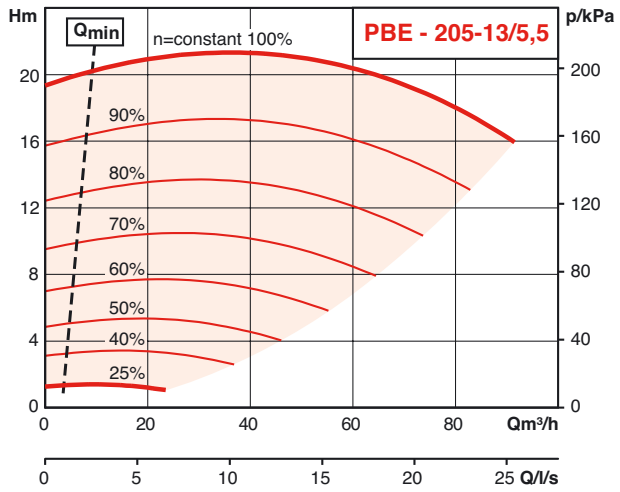

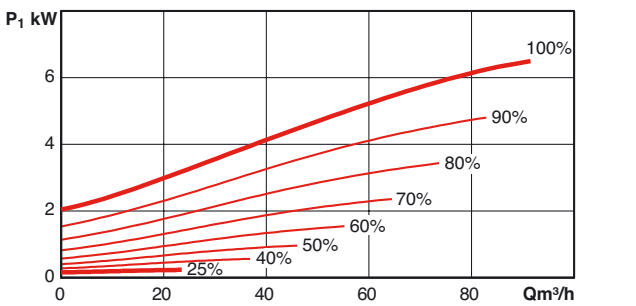

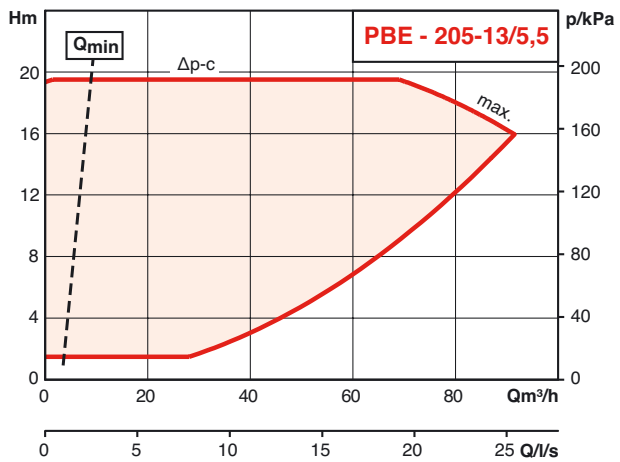

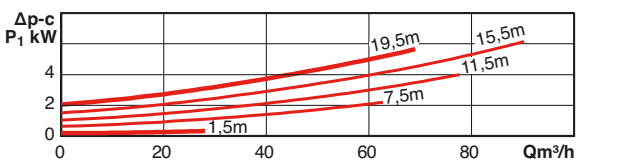

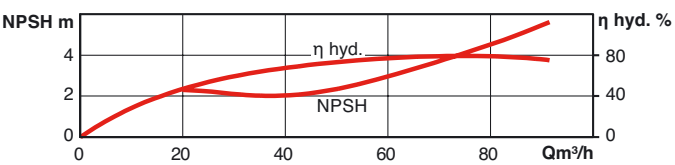

PBE

HYDRAULIC PERFORMANCES

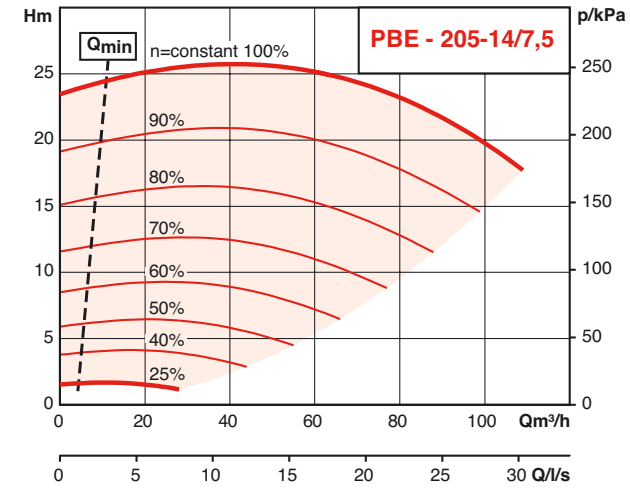

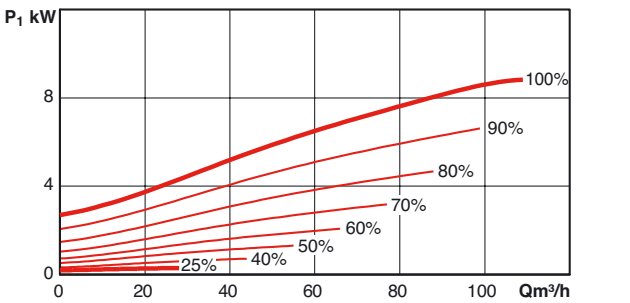

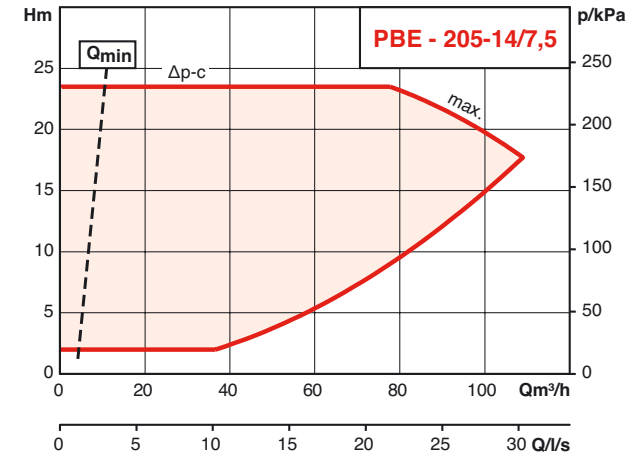

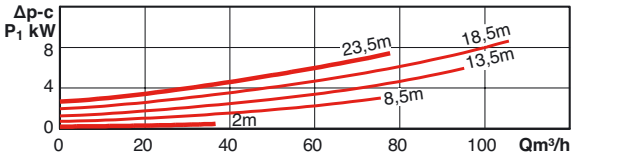

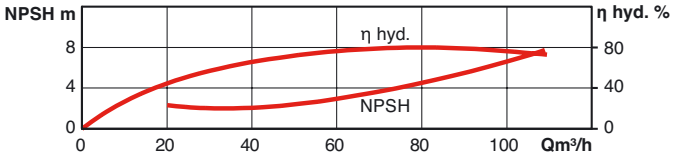

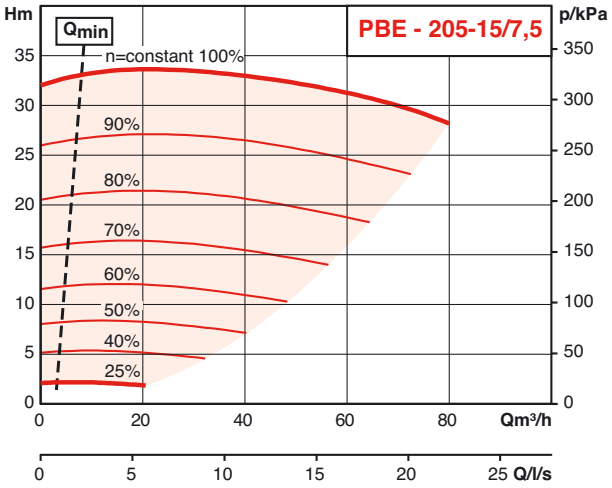

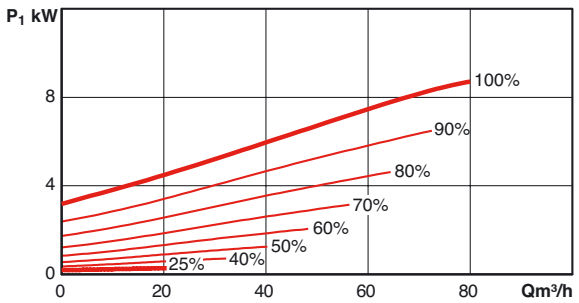

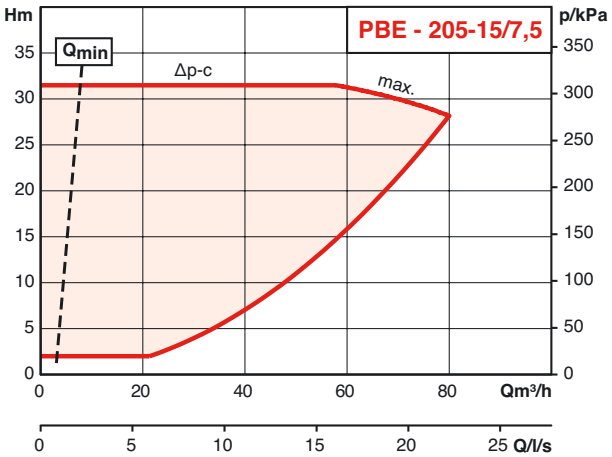

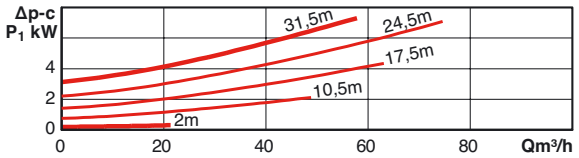

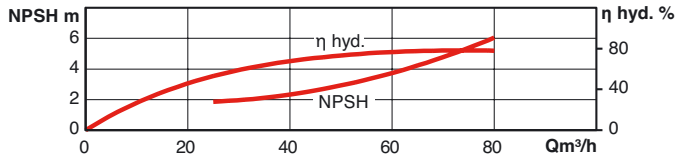

HYDRAULIC PERFORMANCES

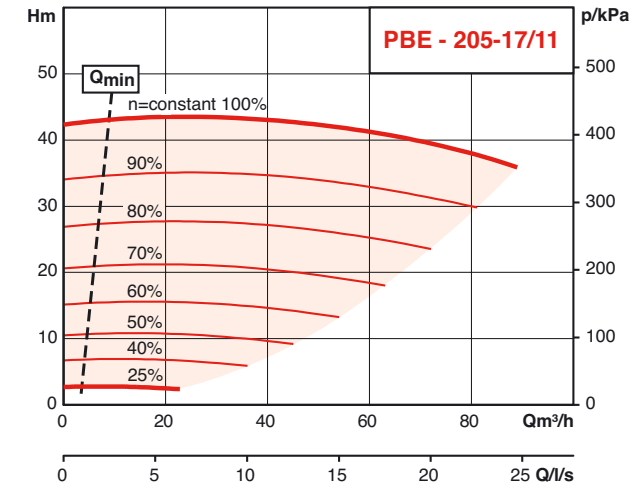

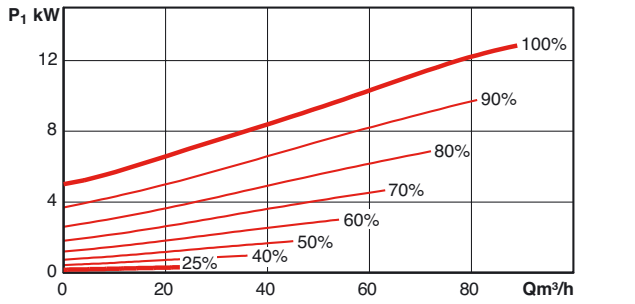

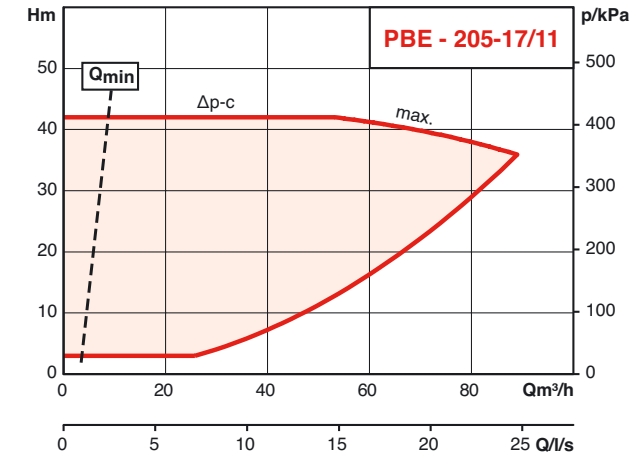

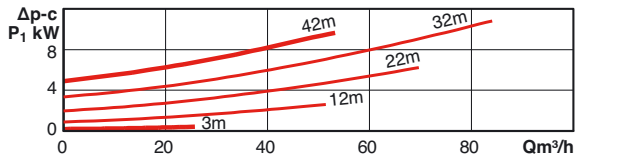

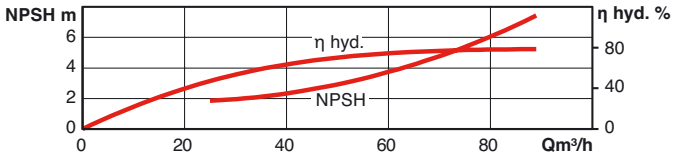

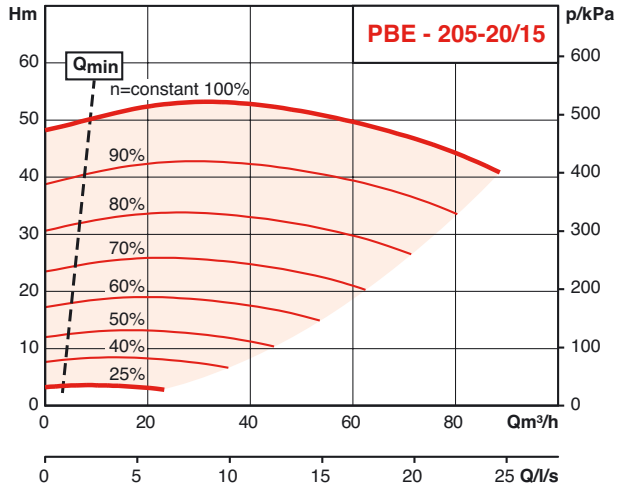

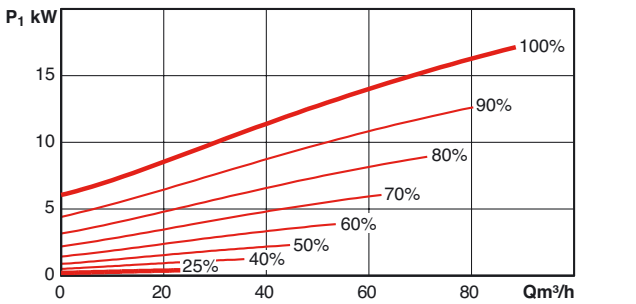

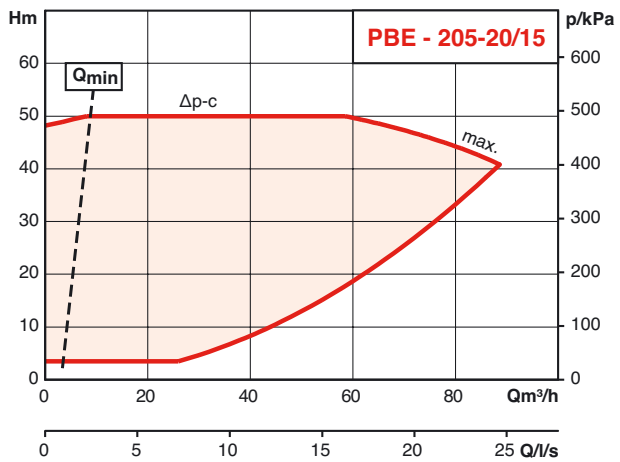

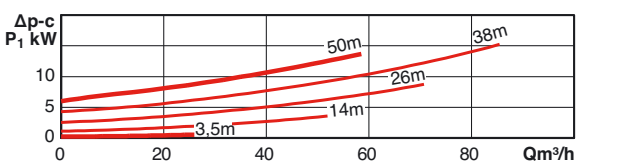

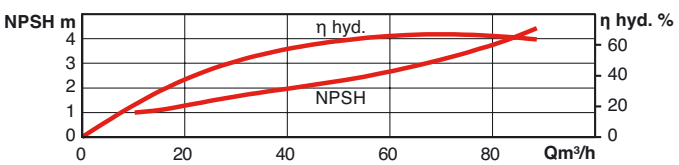

PBE

HYDRAULIC PERFORMANCES

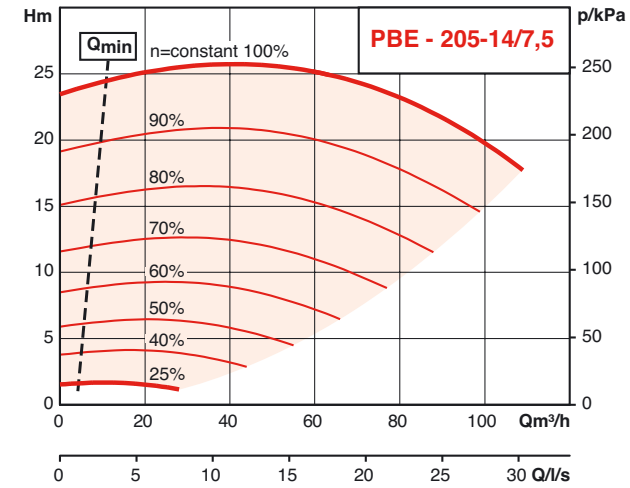

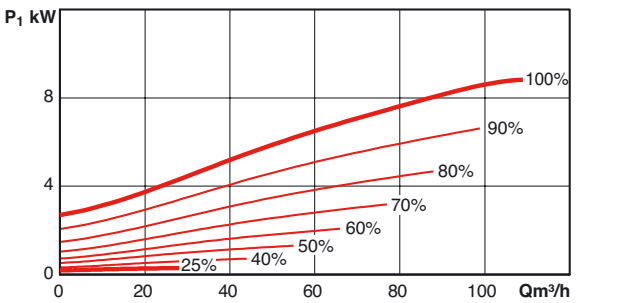

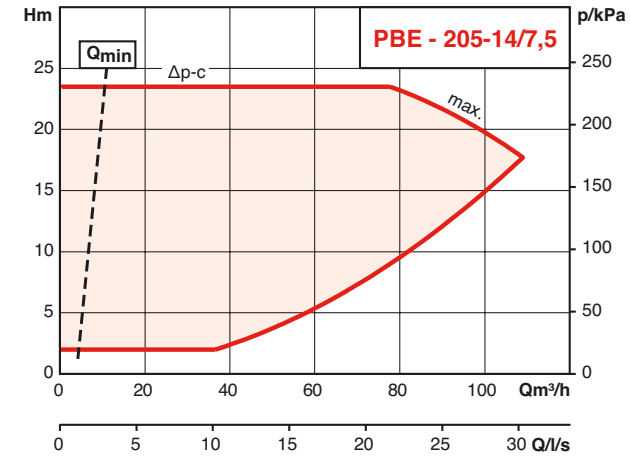

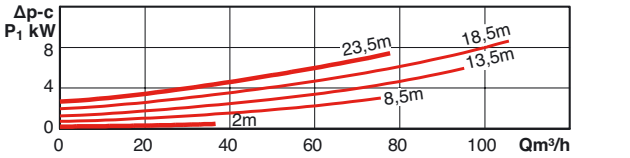

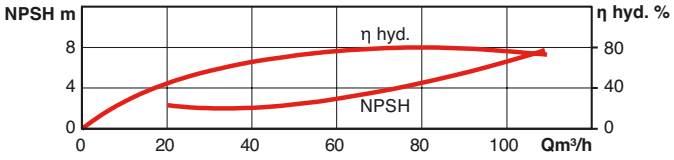

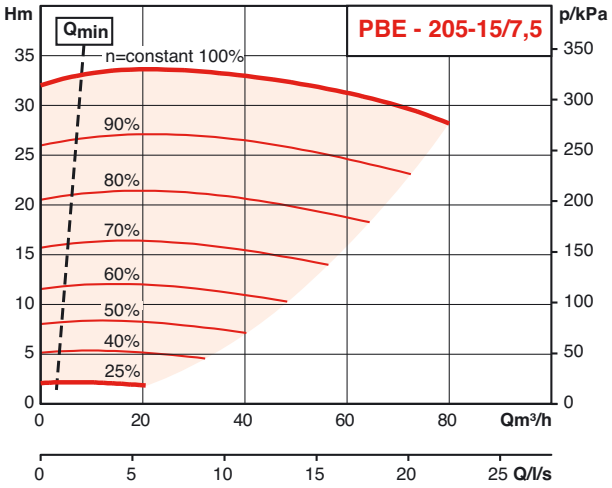

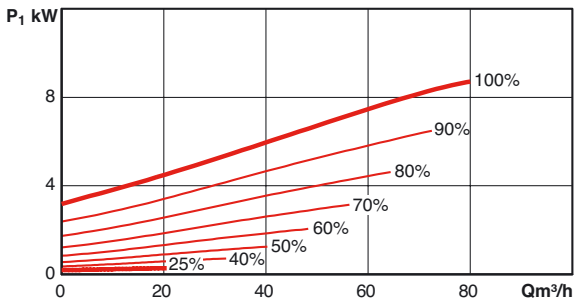

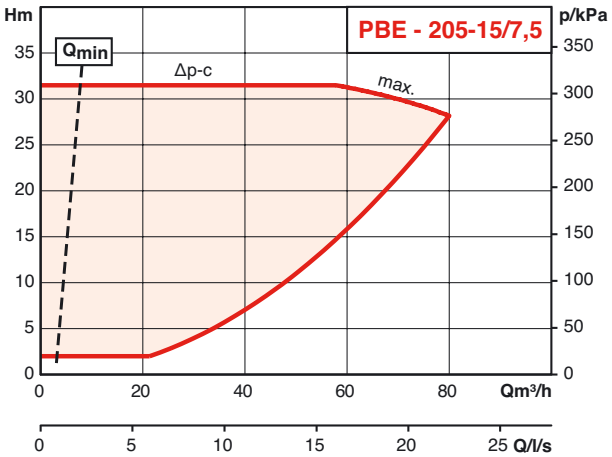

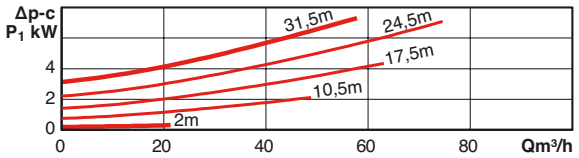

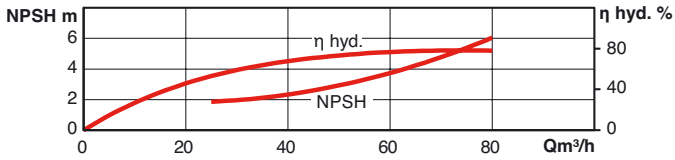

HYDRAULIC PERFORMANCES

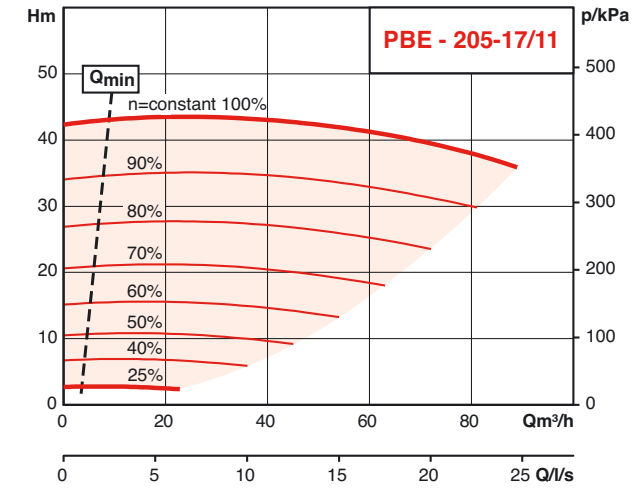

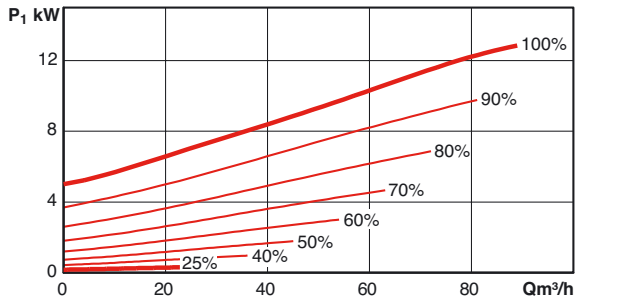

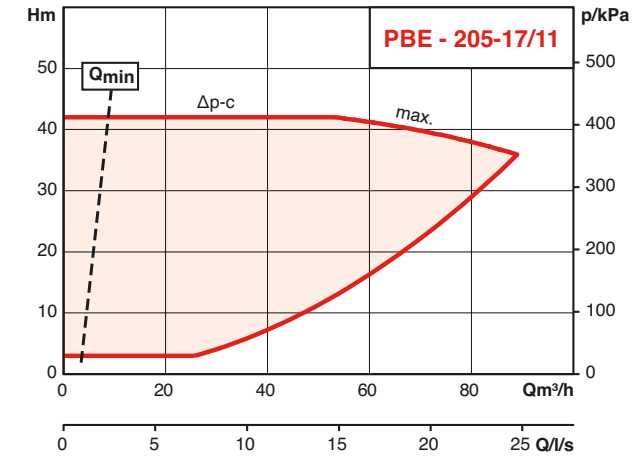

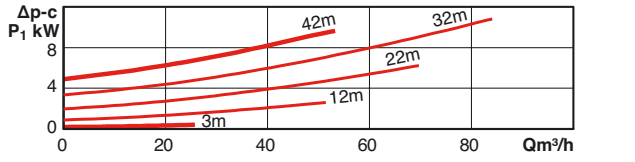

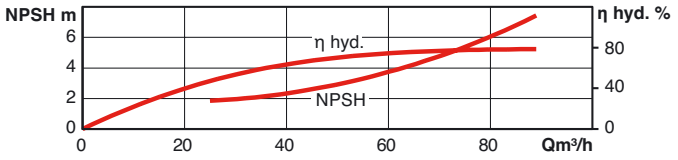

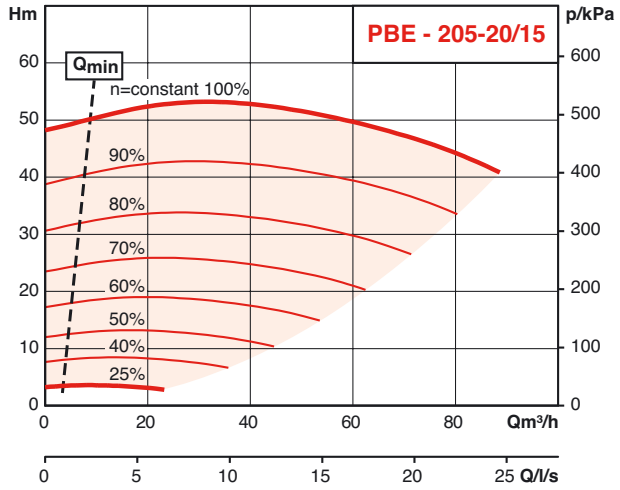

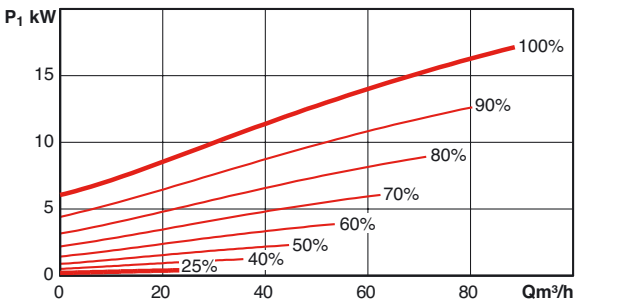

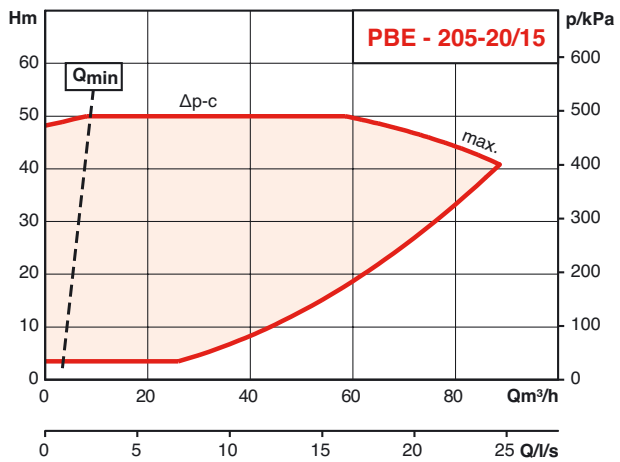

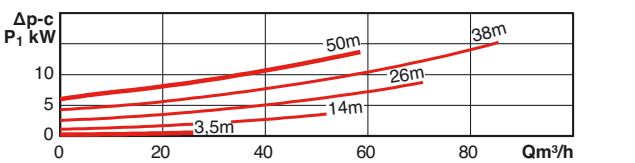

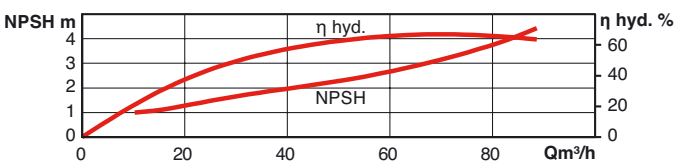

PBE

HYDRAULIC PERFORMANCES

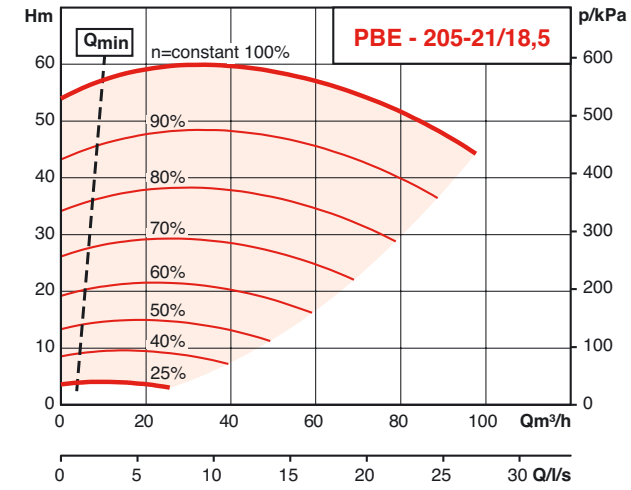

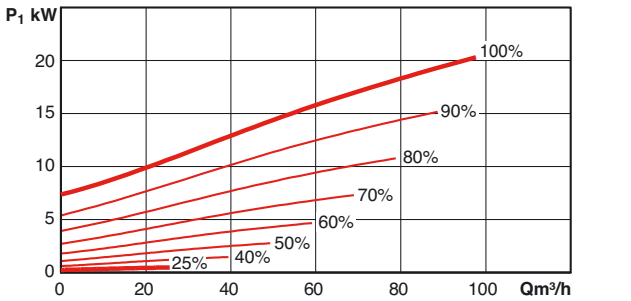

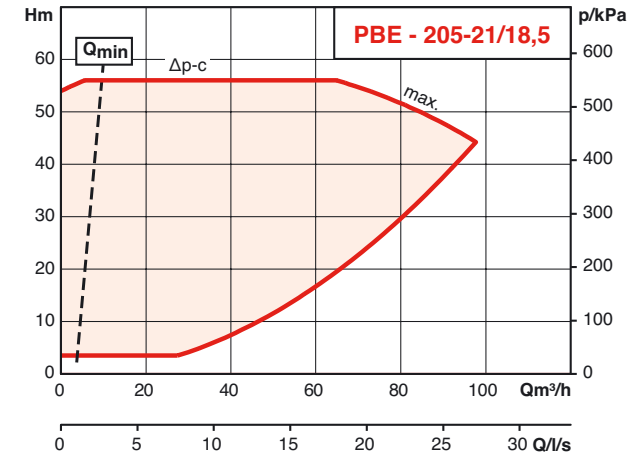

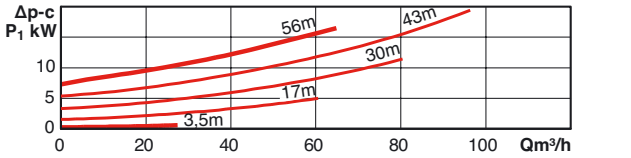

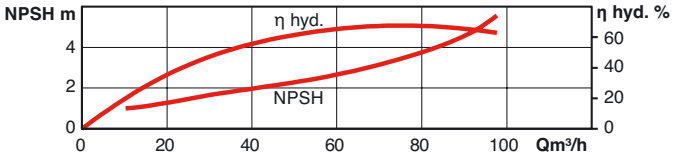

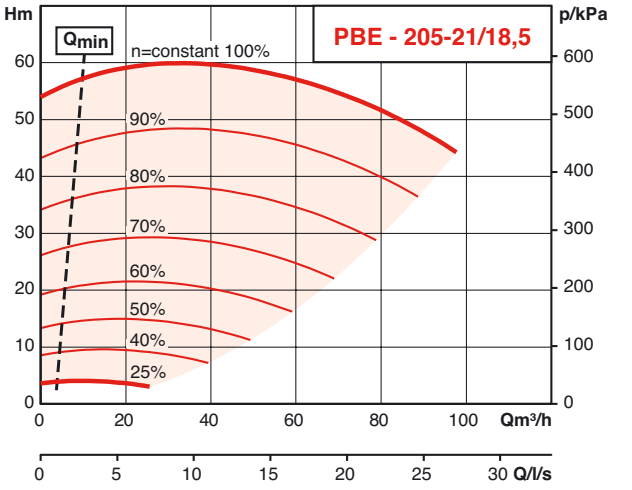

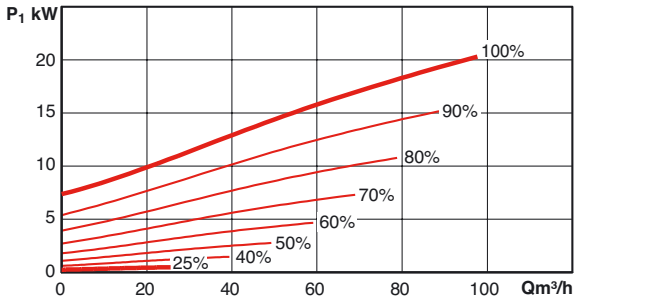

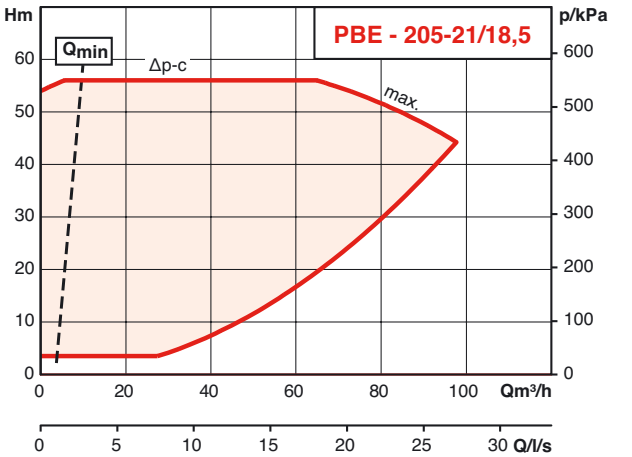

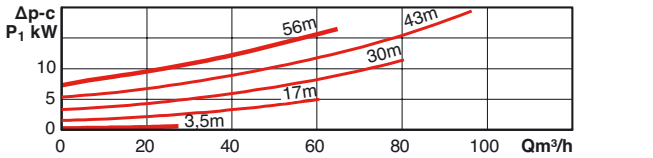

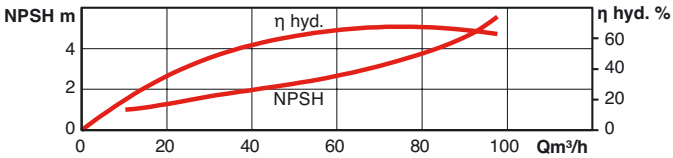

HYDRAULIC PERFORMANCES

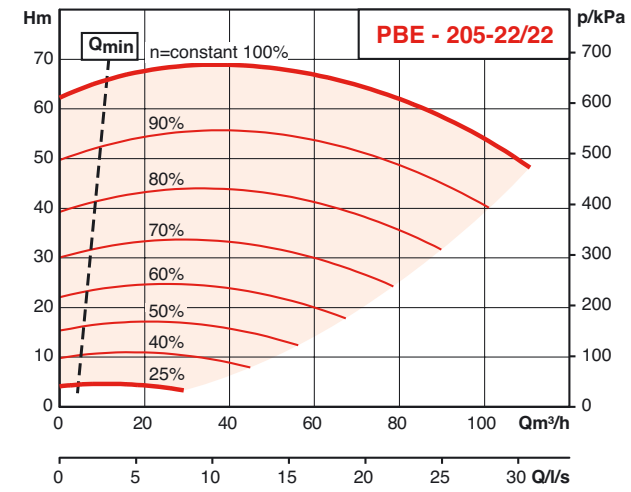

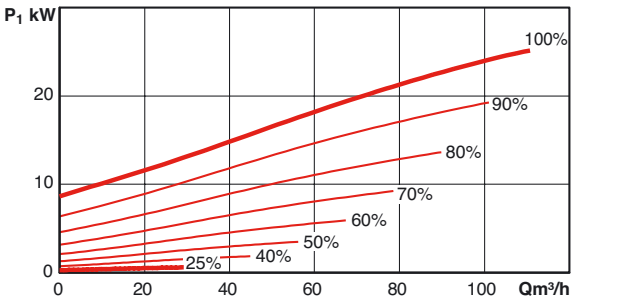

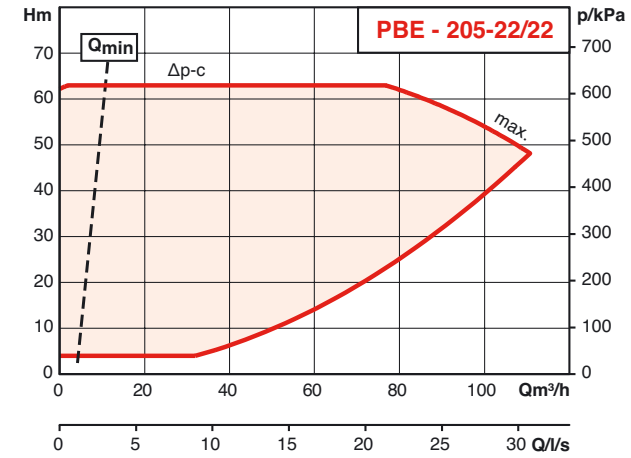

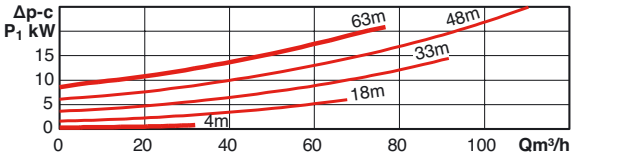

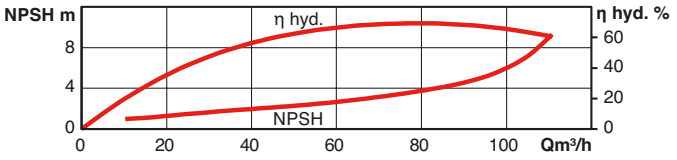

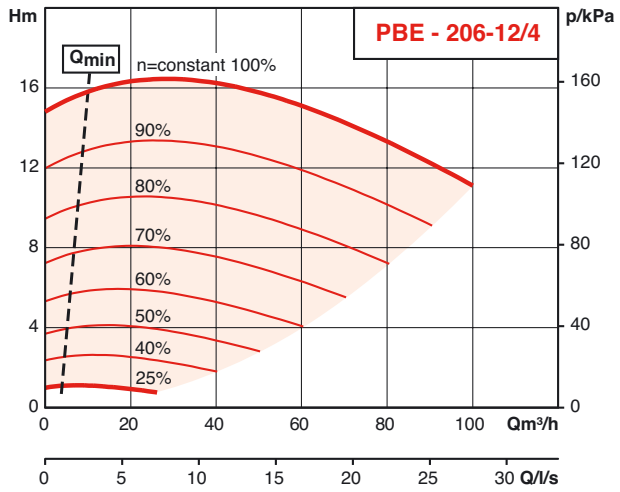

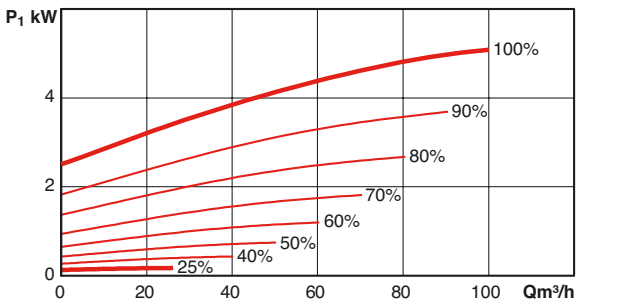

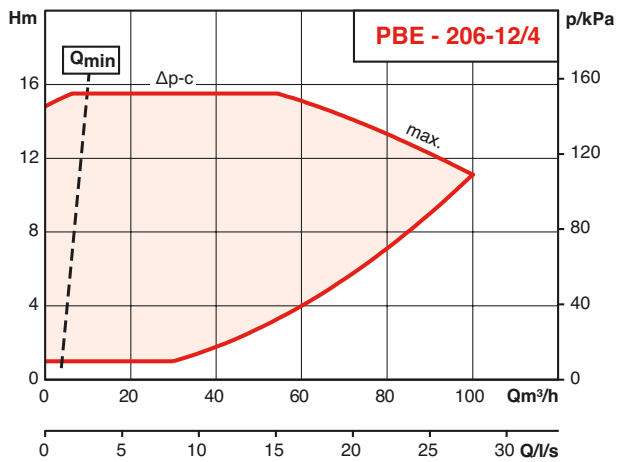

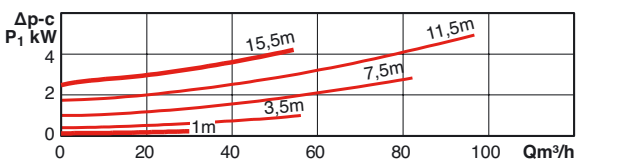

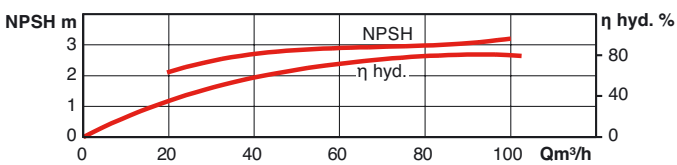

PBE

HYDRAULIC PERFORMANCES

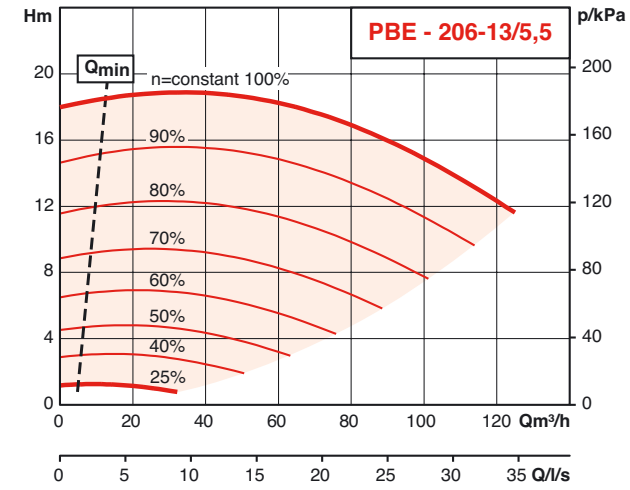

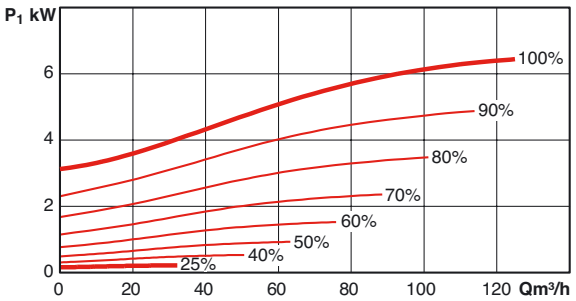

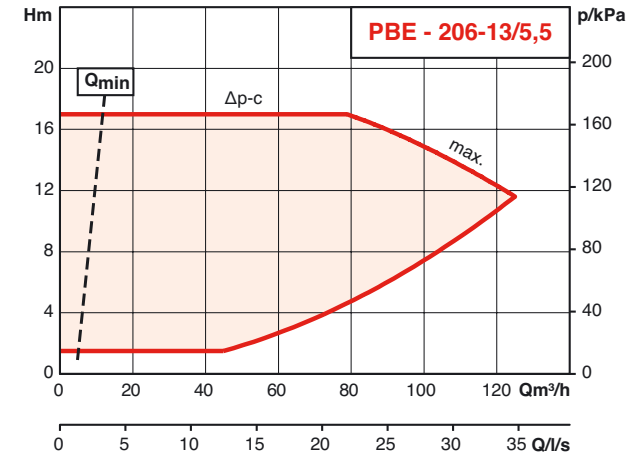

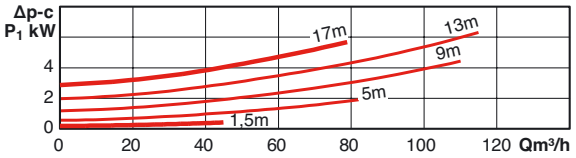

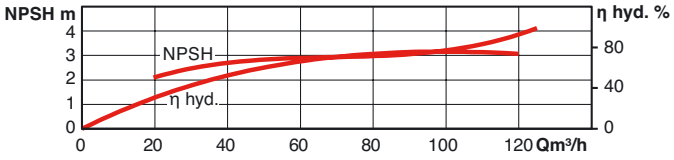

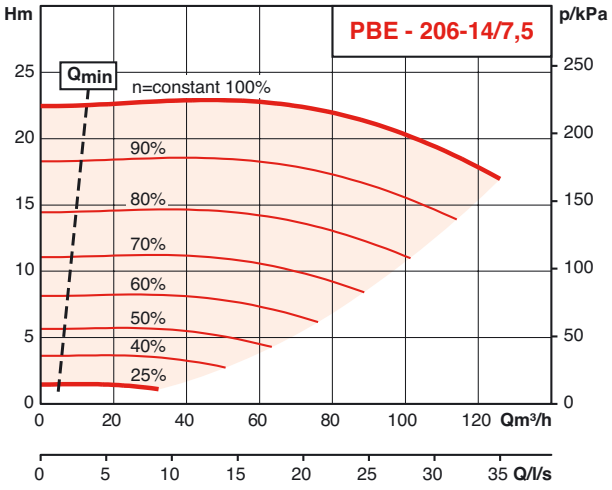

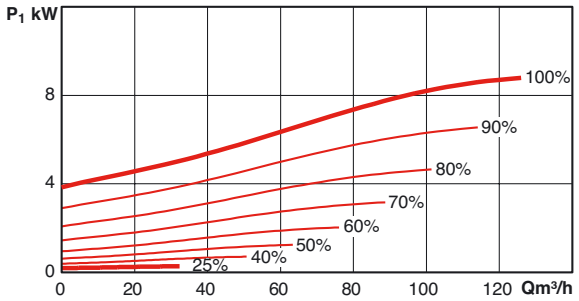

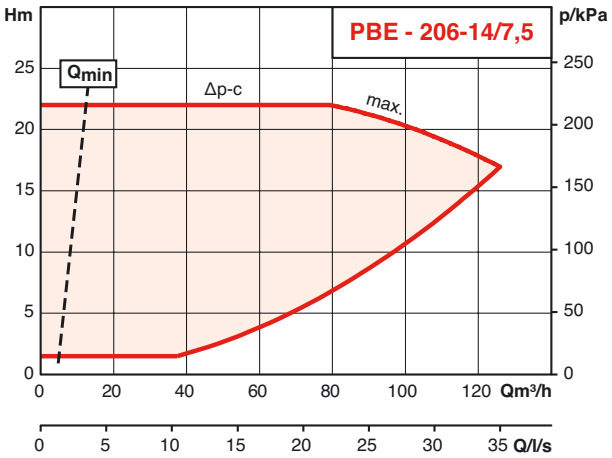

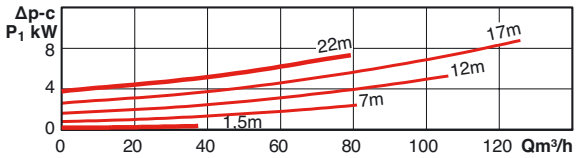

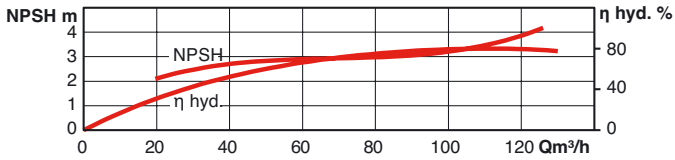

HYDRAULIC PERFORMANCES

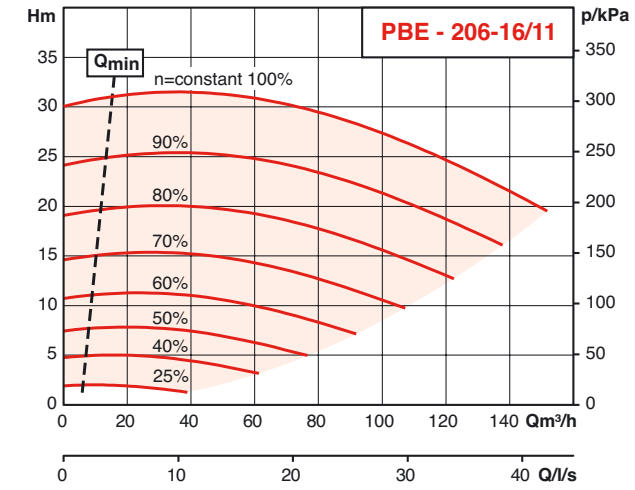

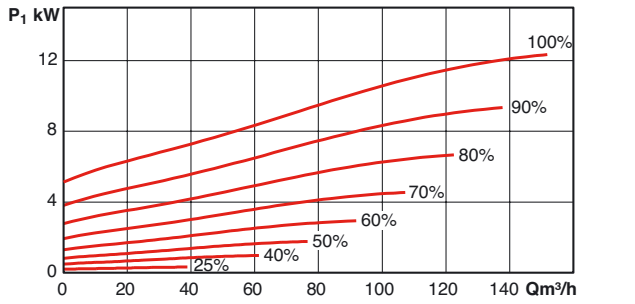

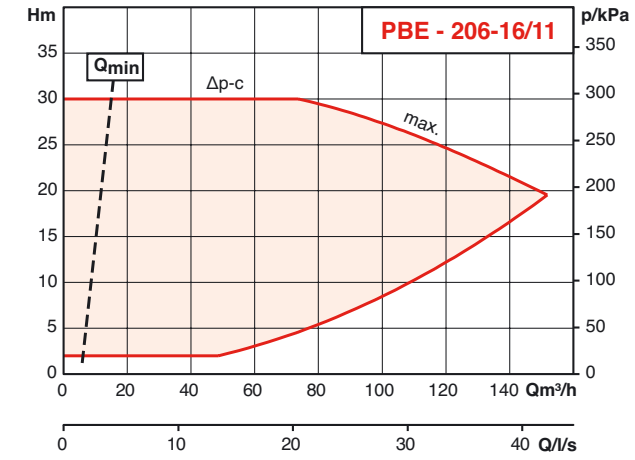

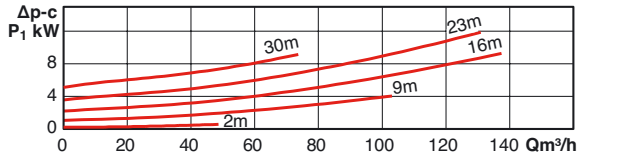

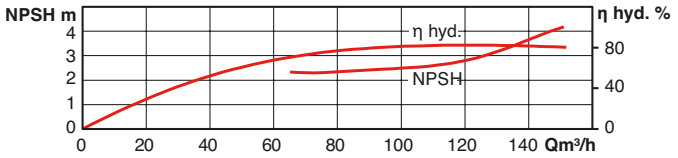

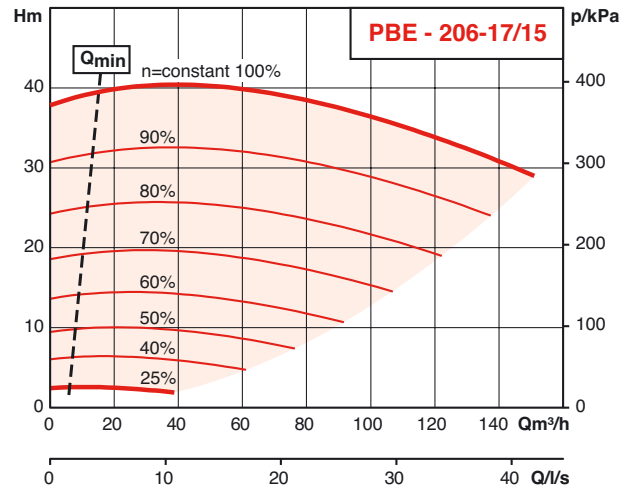

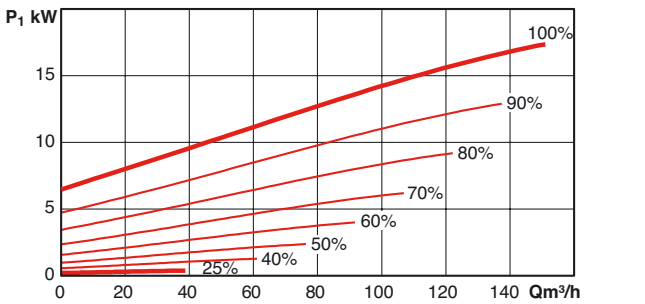

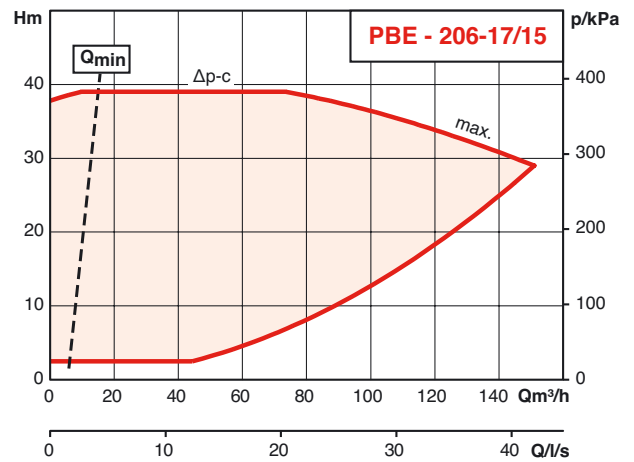

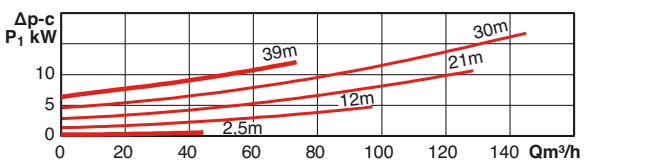

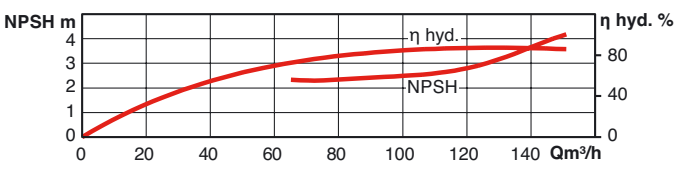

PBE

HYDRAULIC PERFORMANCES

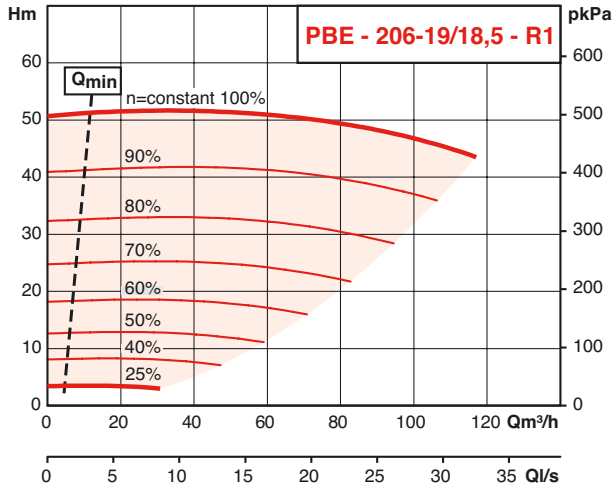

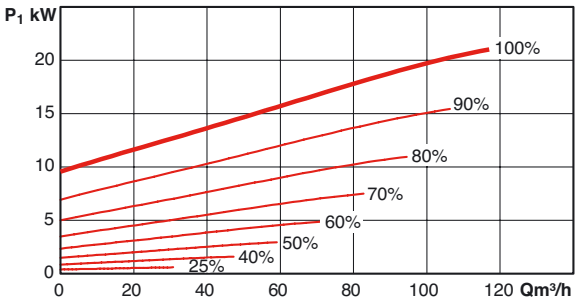

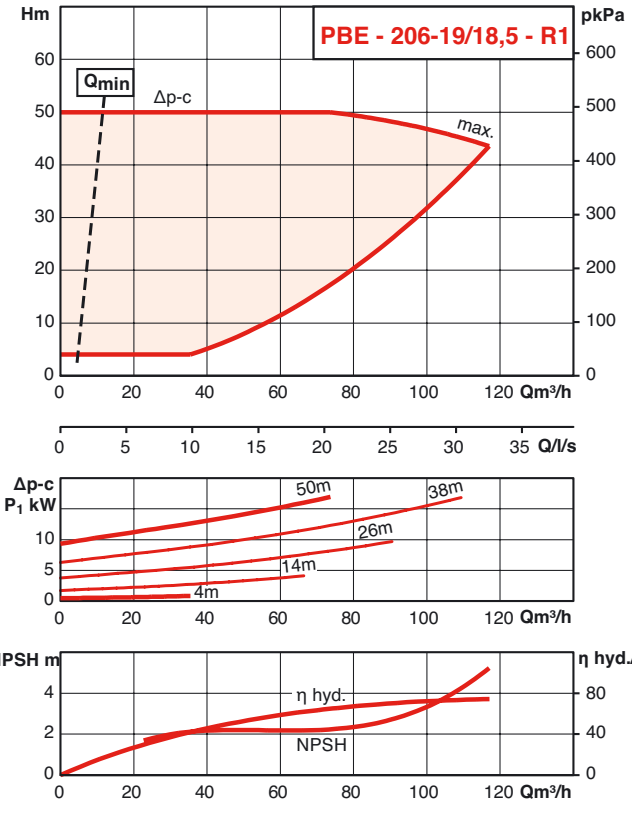

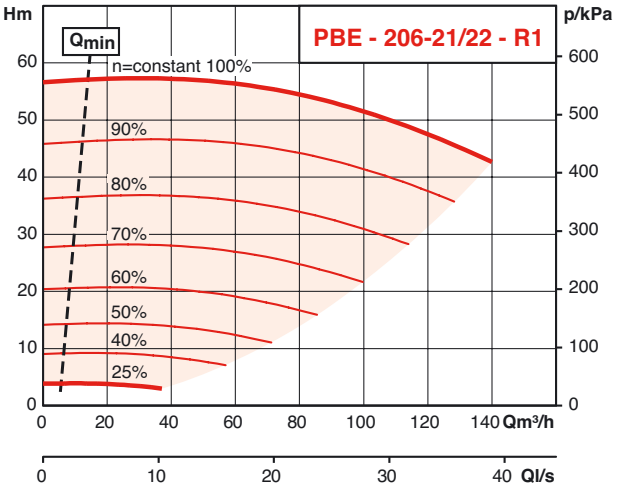

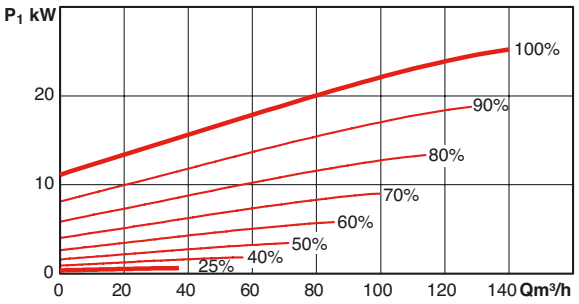

HYDRAULIC PERFORMANCES

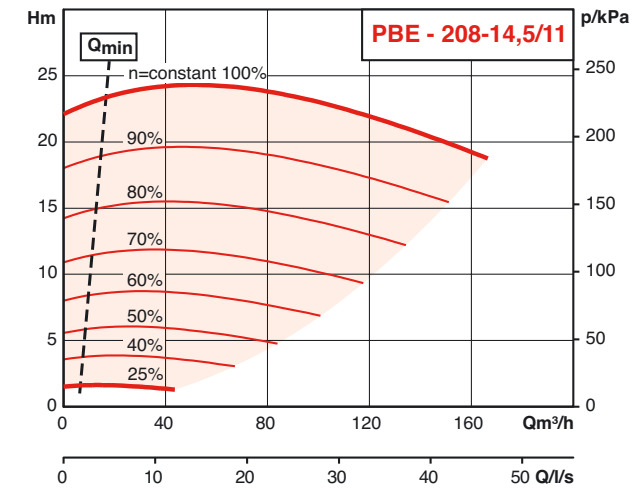

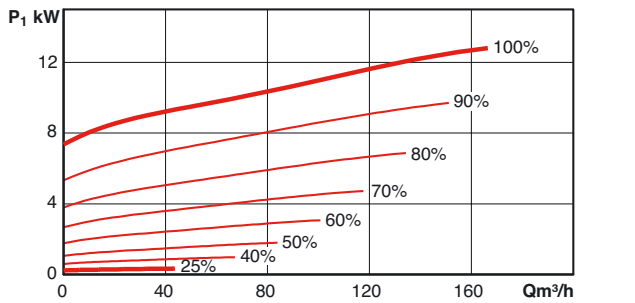

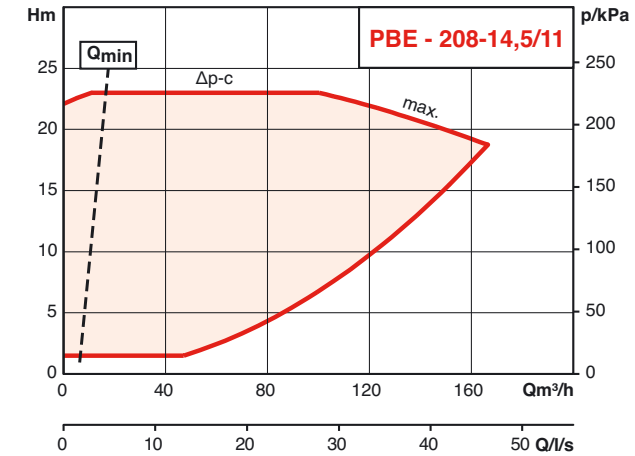

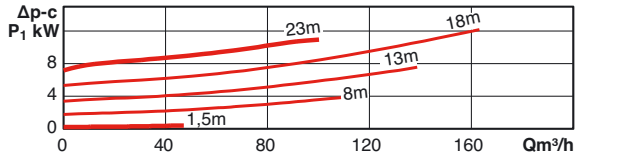

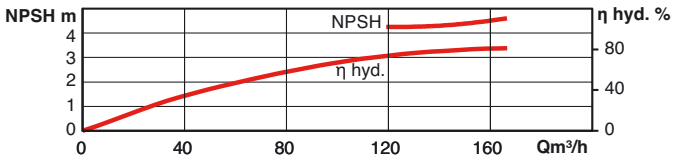

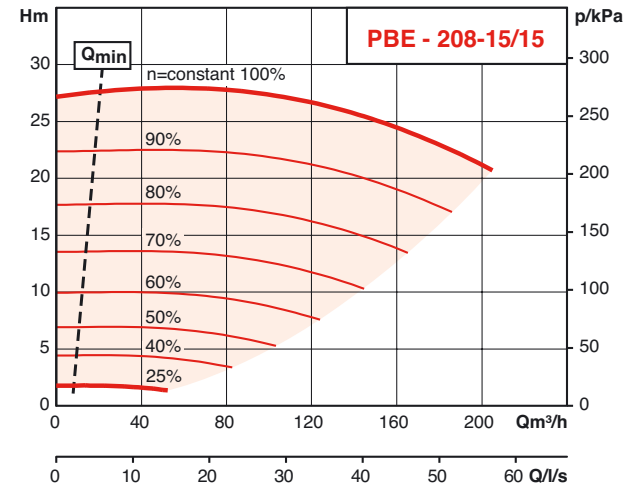

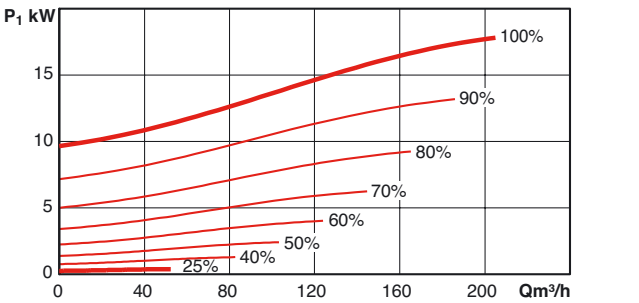

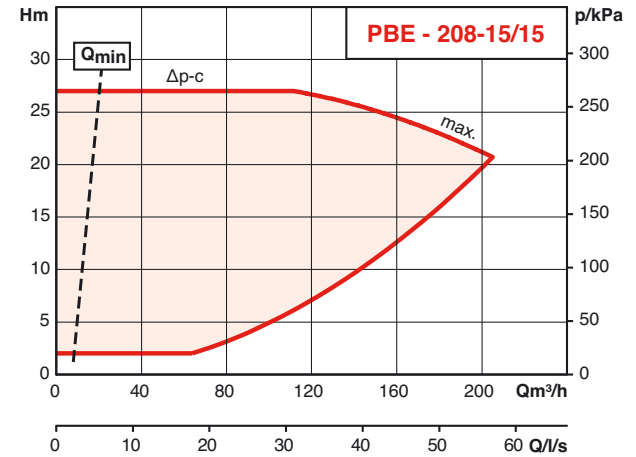

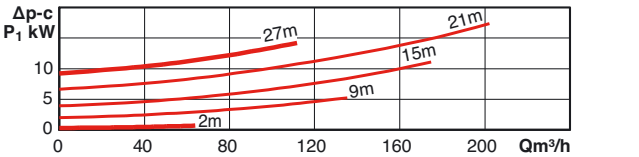

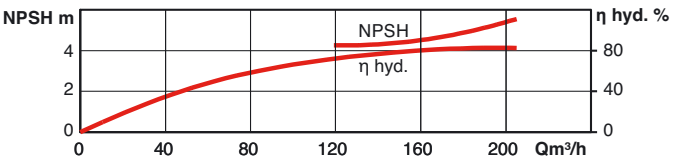

PBE

HYDRAULIC PERFORMANCES

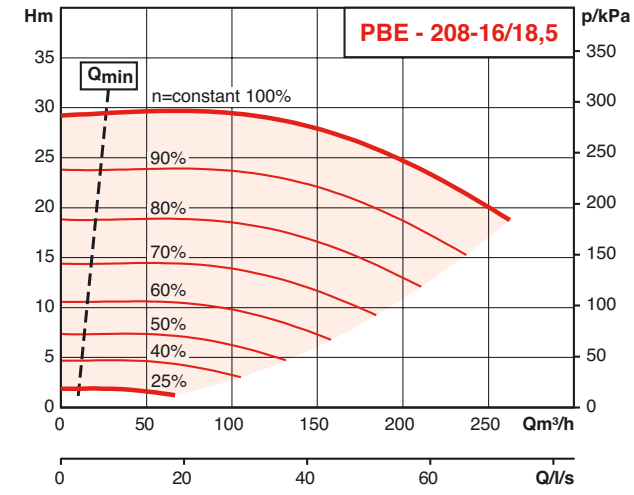

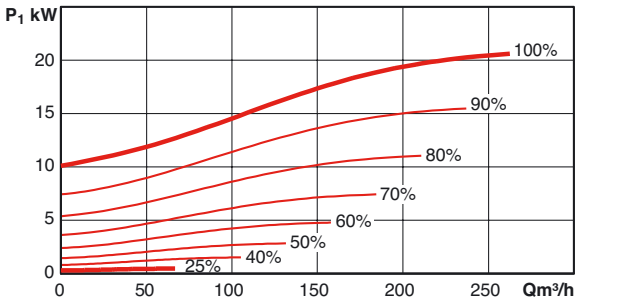

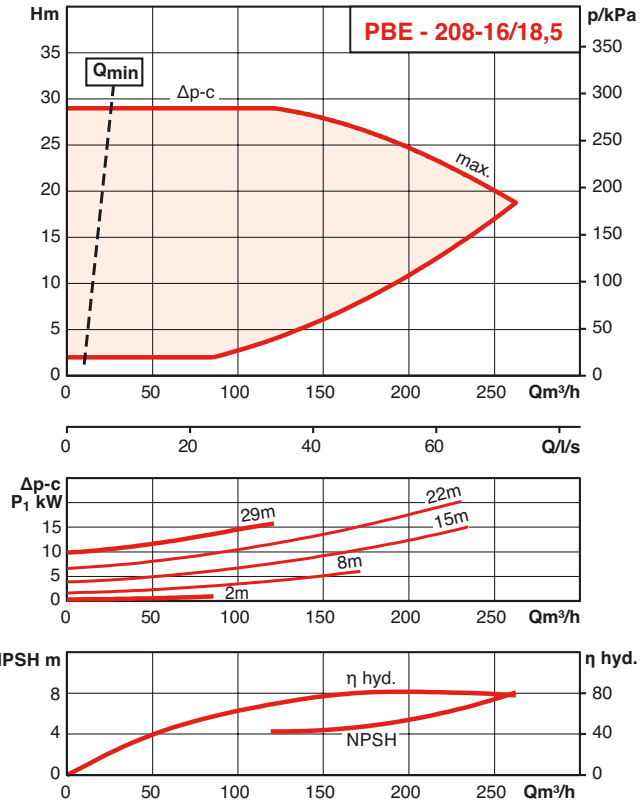

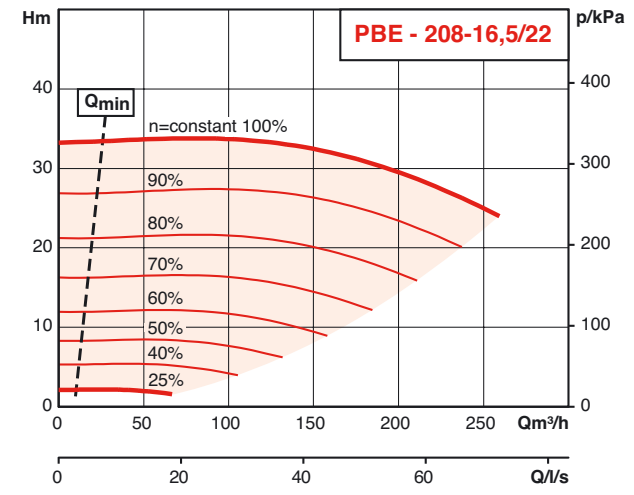

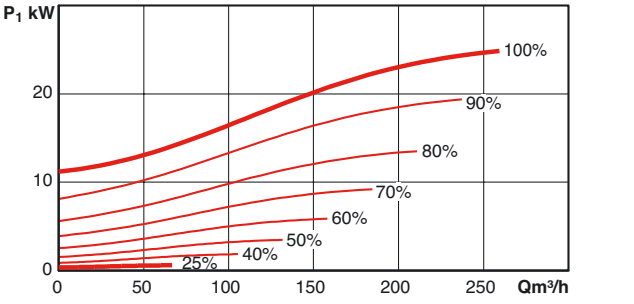

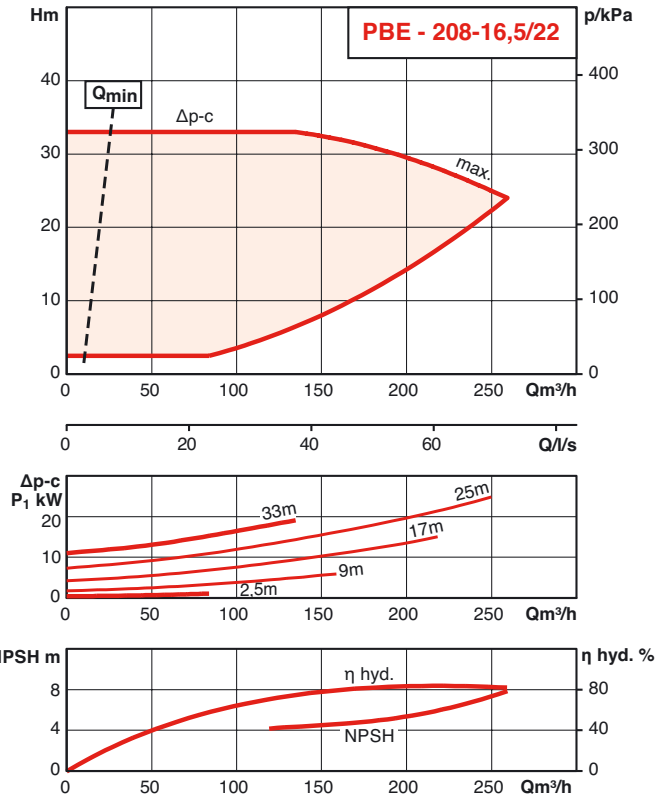

HYDRAULIC PERFORMANCES

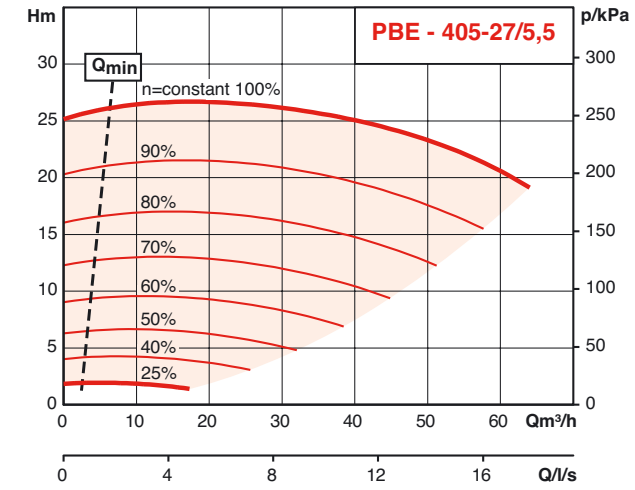

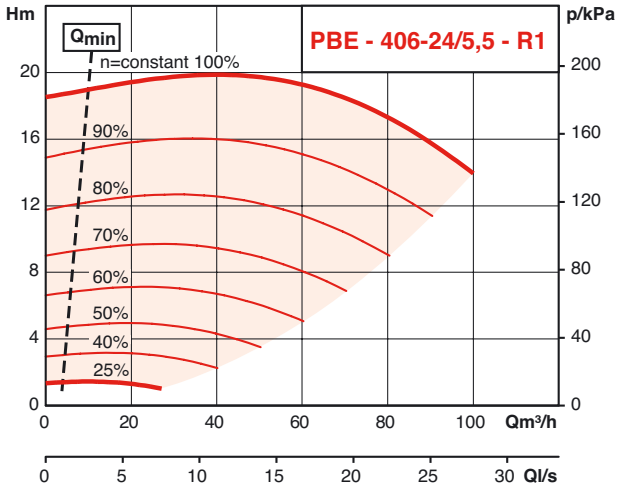

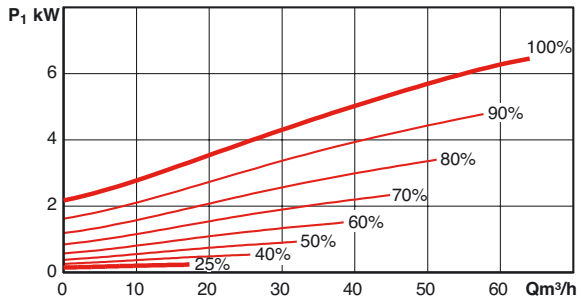

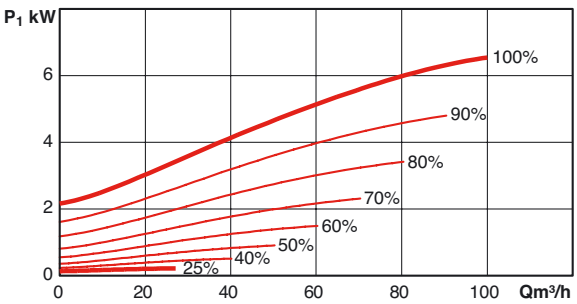

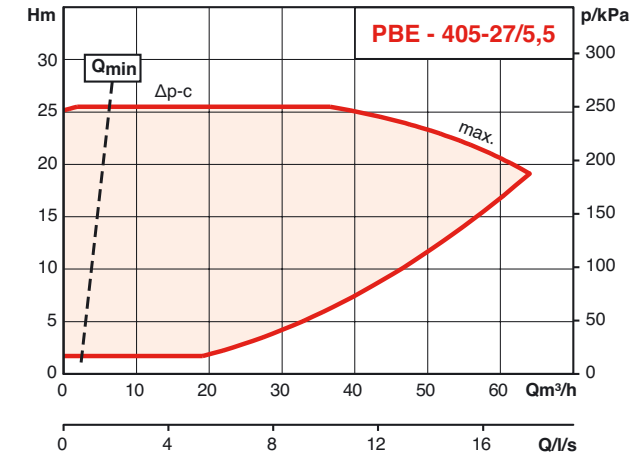

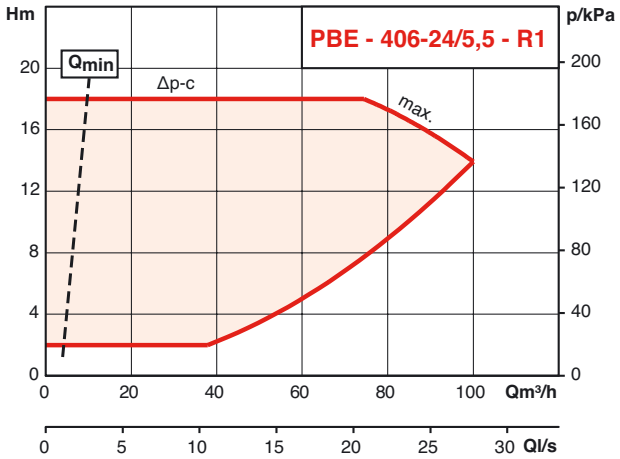

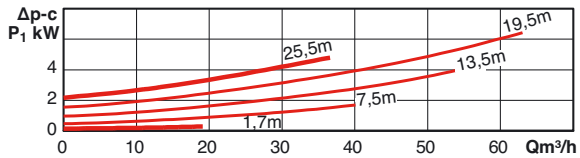

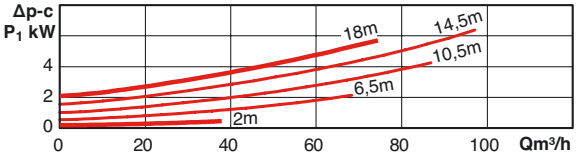

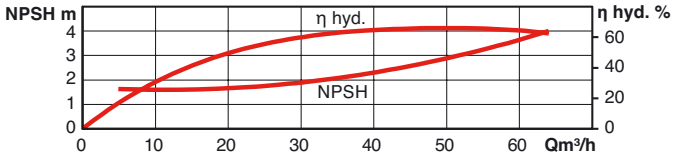

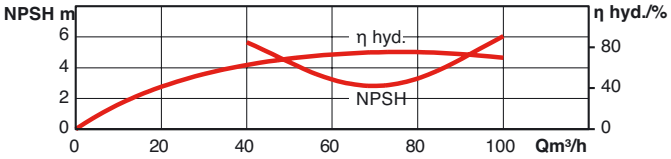

PBE

HYDRAULIC PERFORMANCES

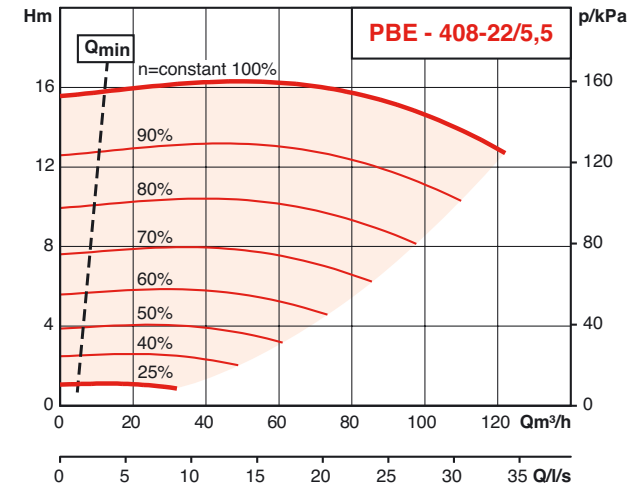

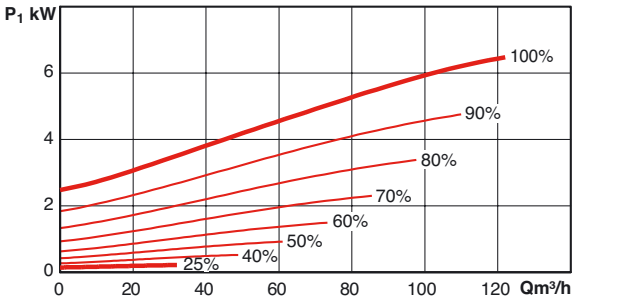

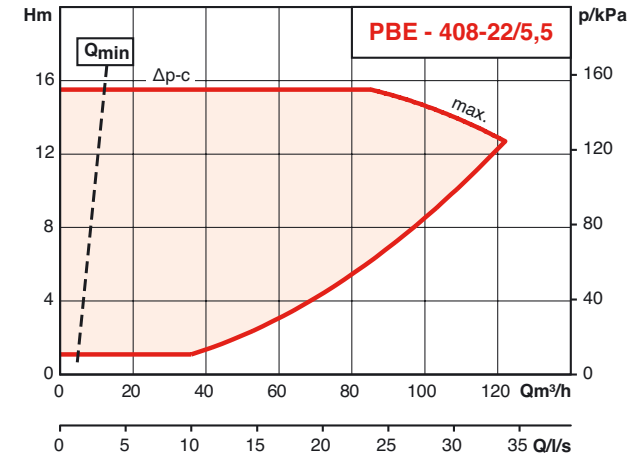

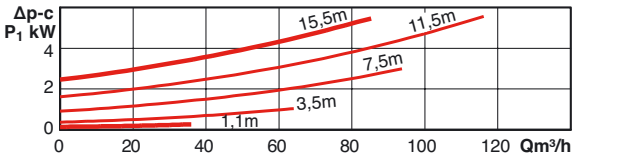

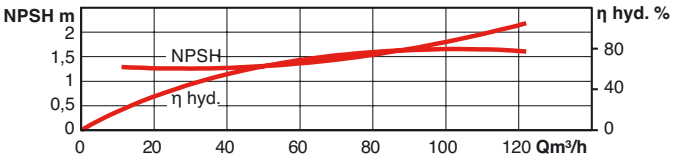

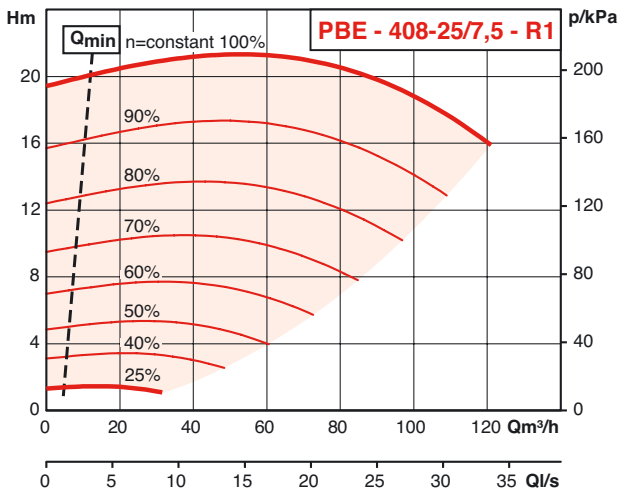

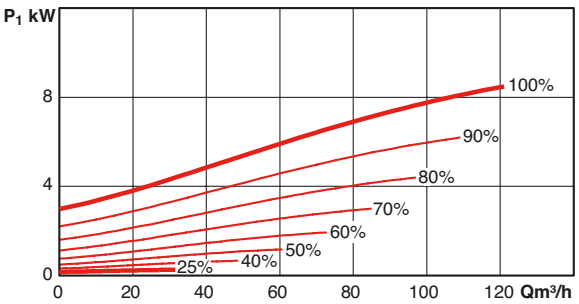

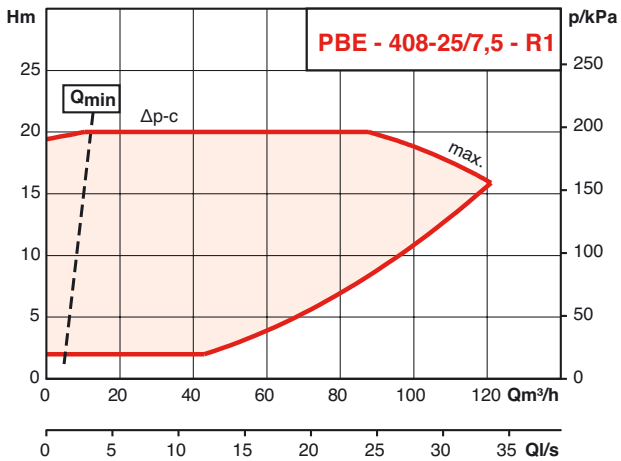

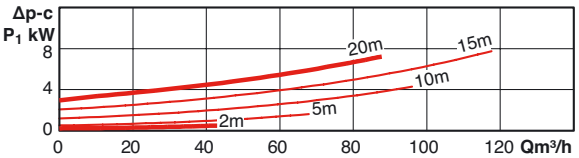

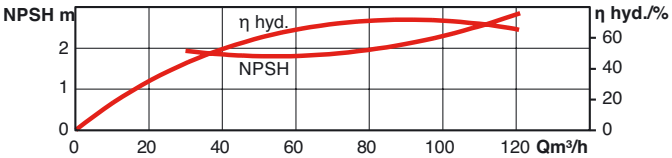

HYDRAULIC PERFORMANCES

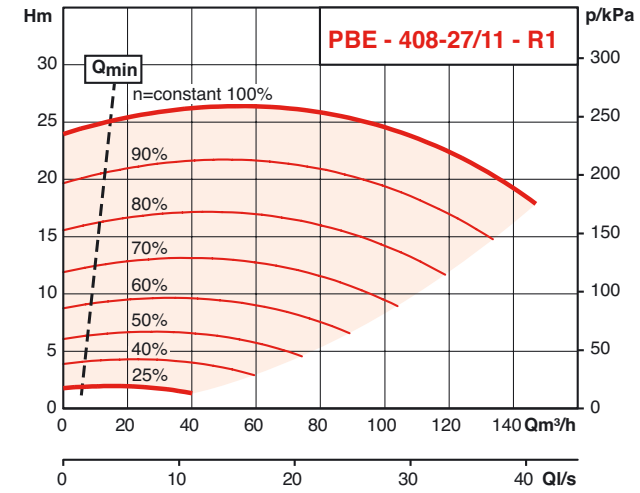

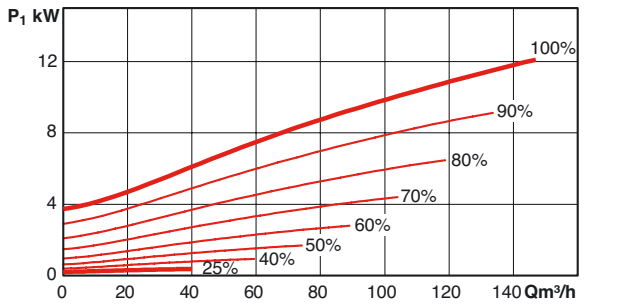

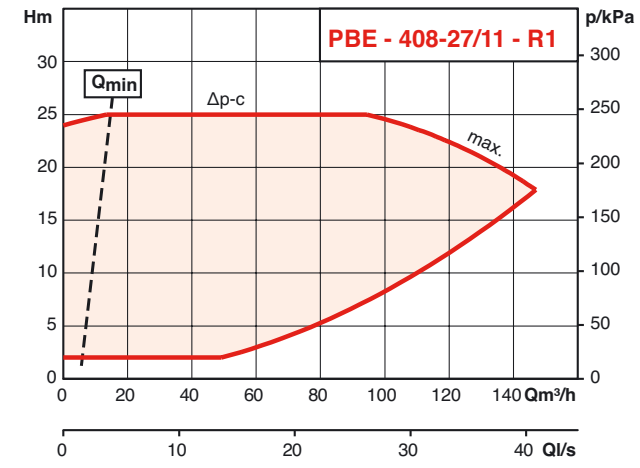

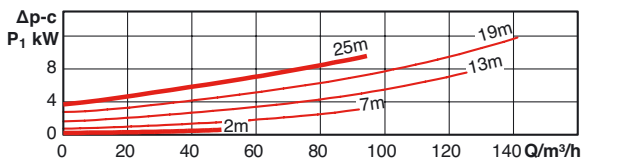

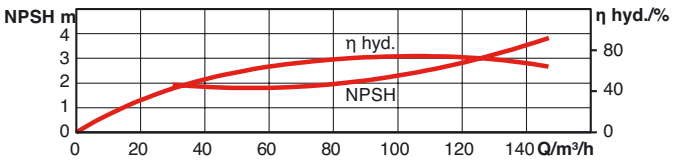

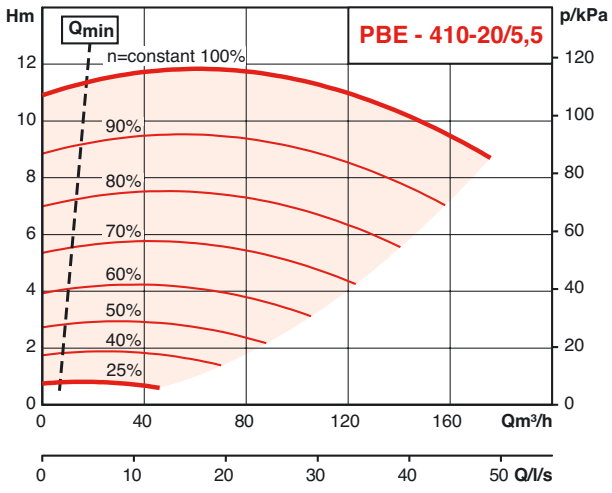

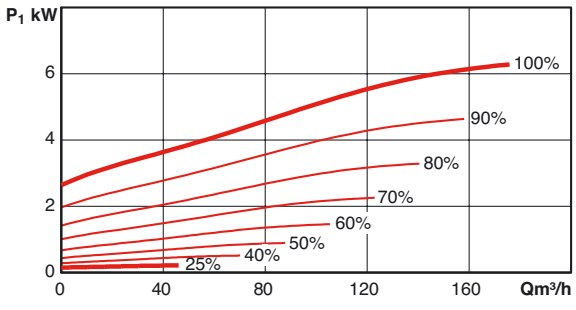

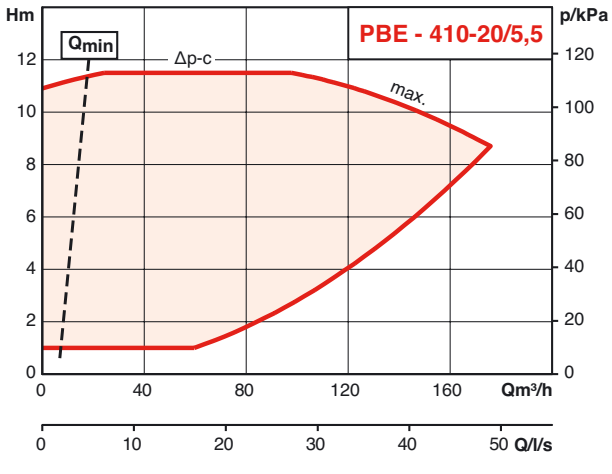

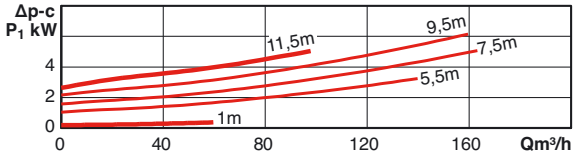

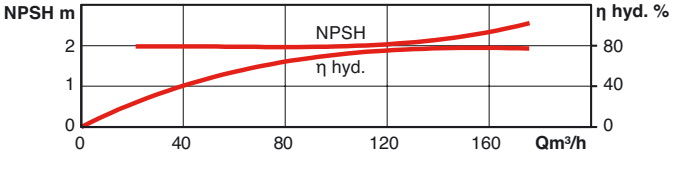

PBE

HYDRAULIC PERFORMANCES

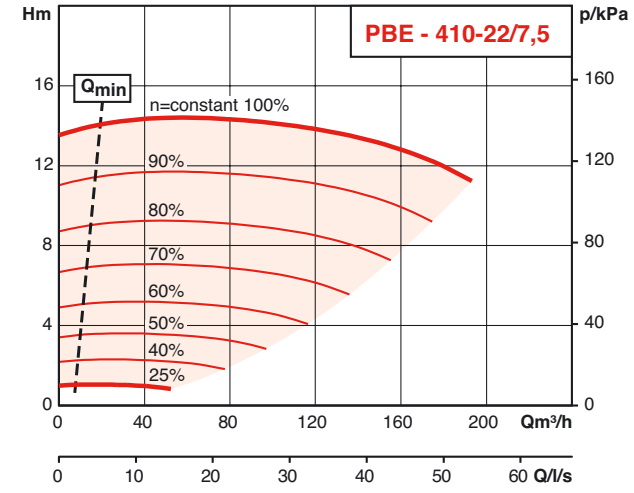

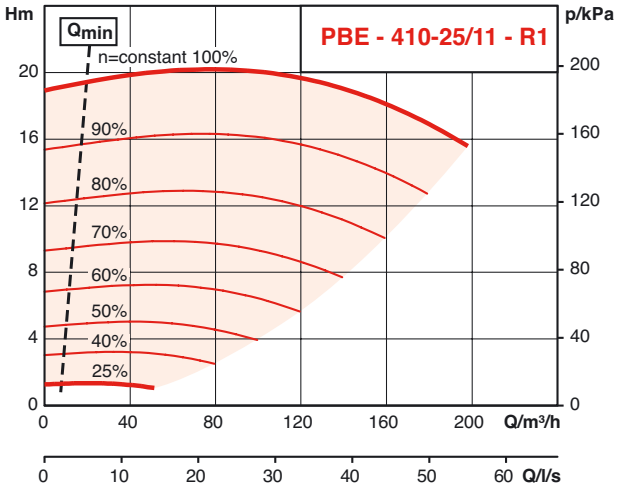

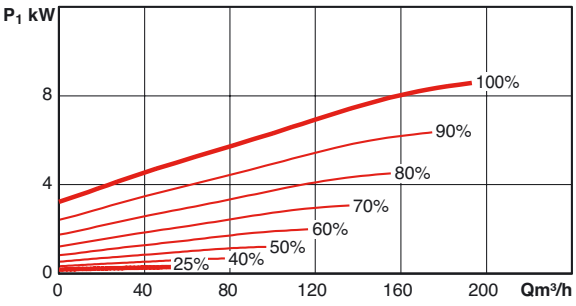

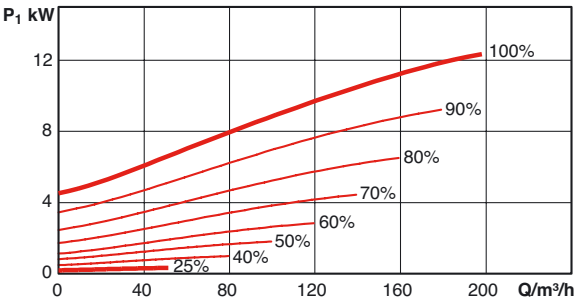

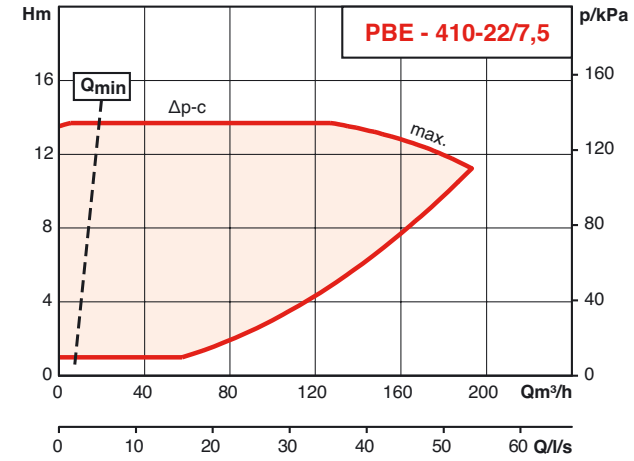

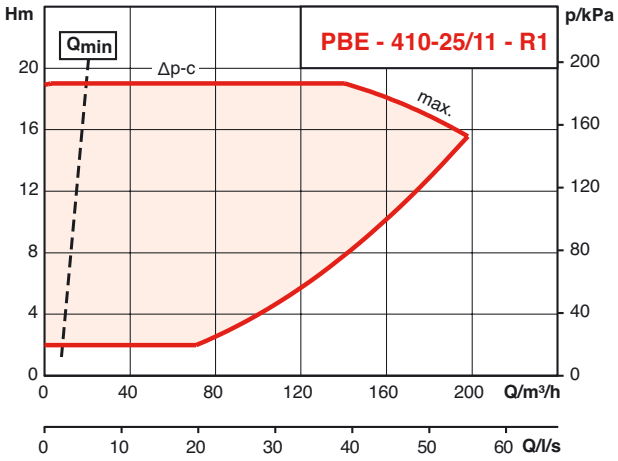

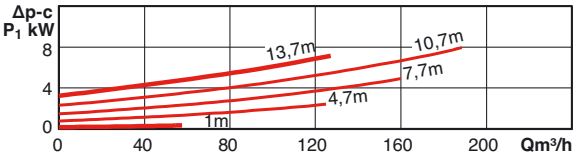

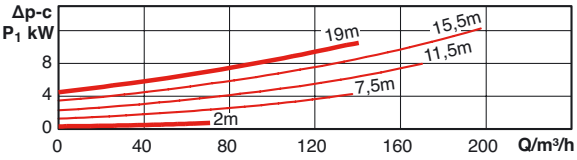

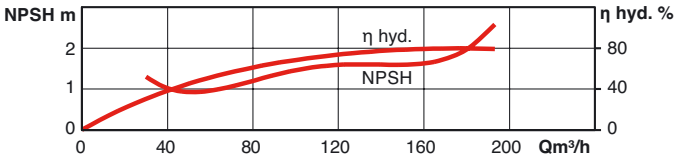

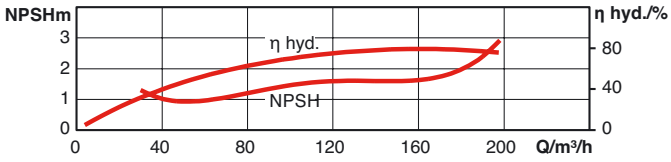

HYDRAULIC PERFORMANCES

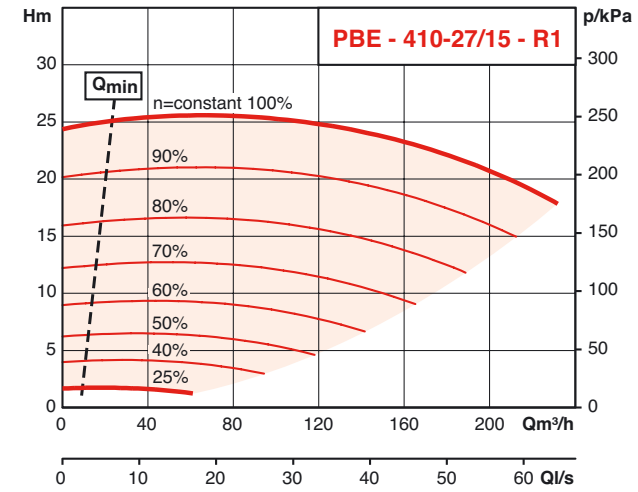

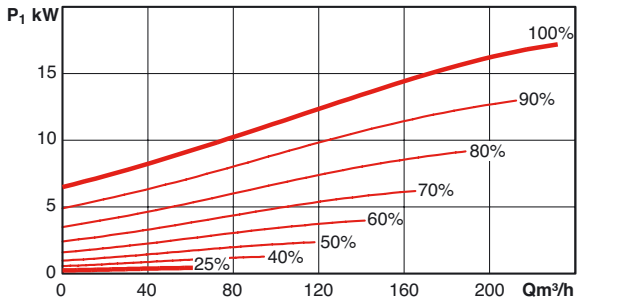

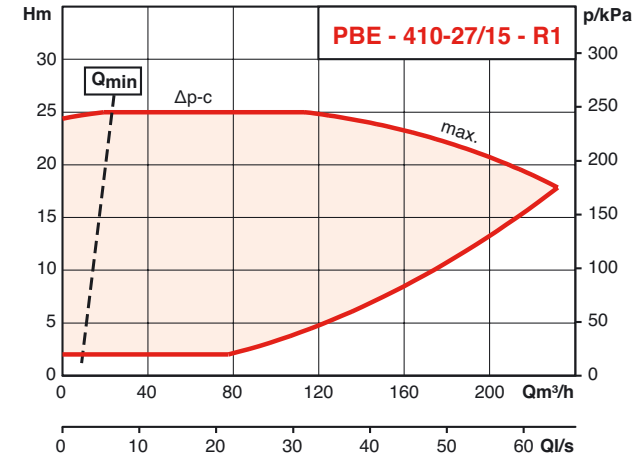

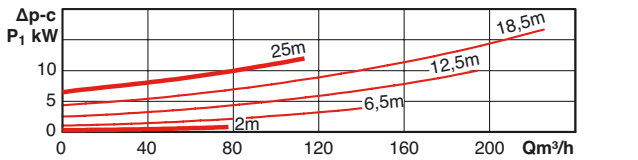

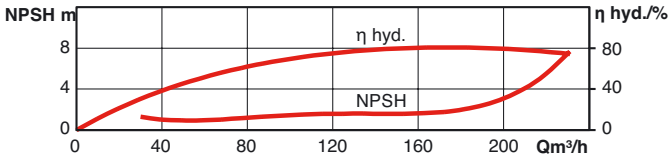

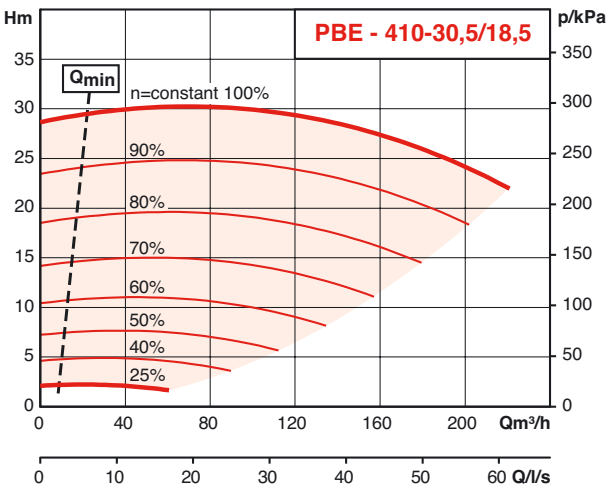

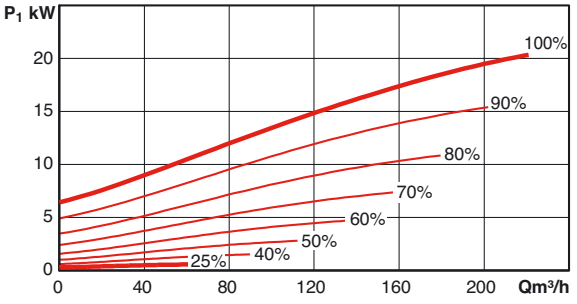

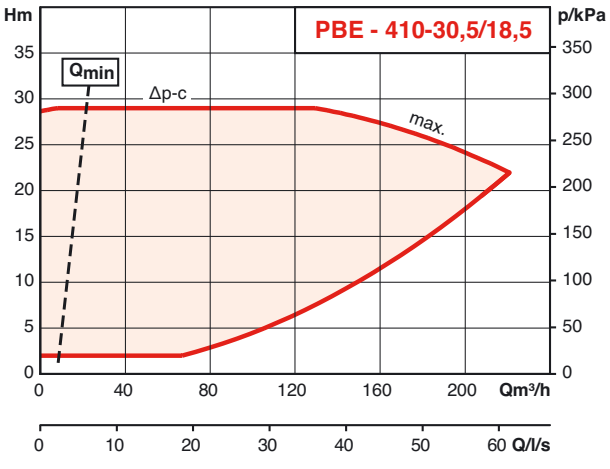

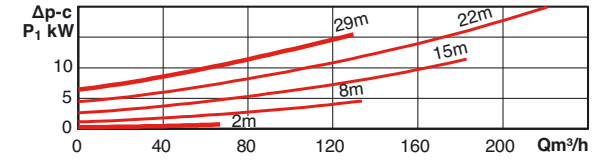

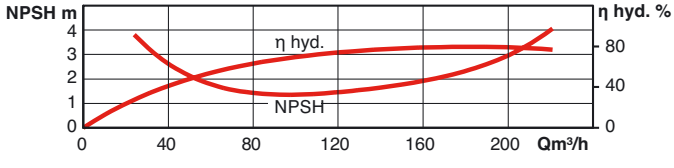

PBE

HYDRAULIC PERFORMANCES

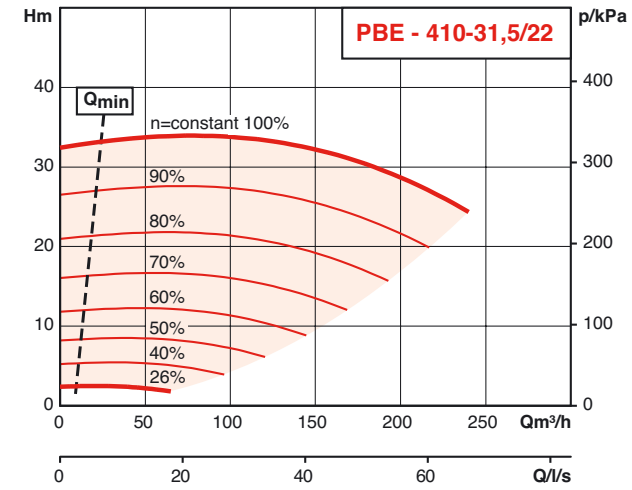

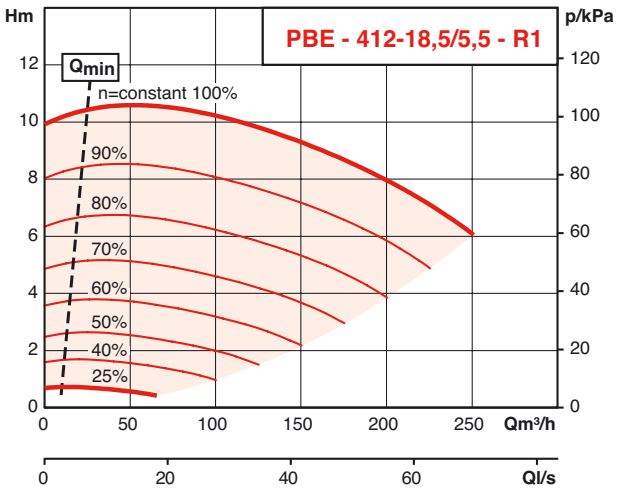

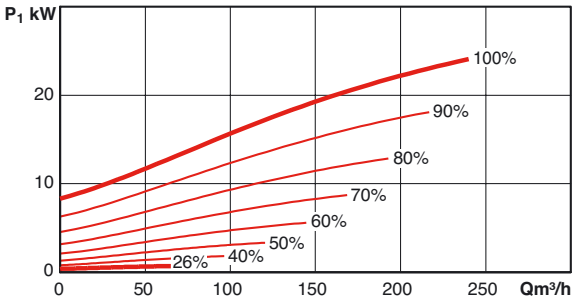

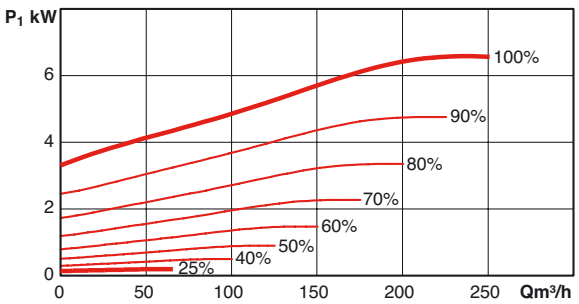

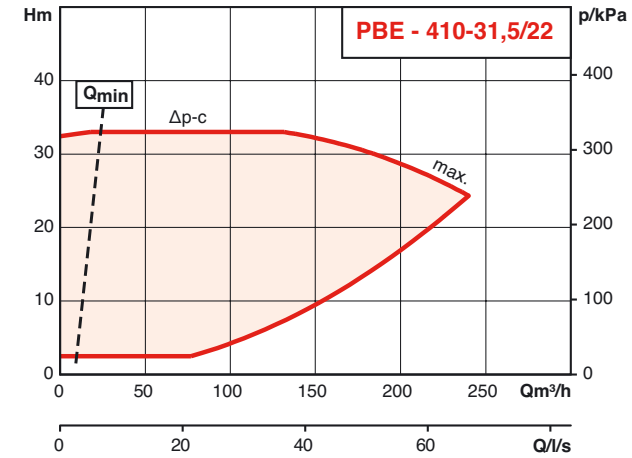

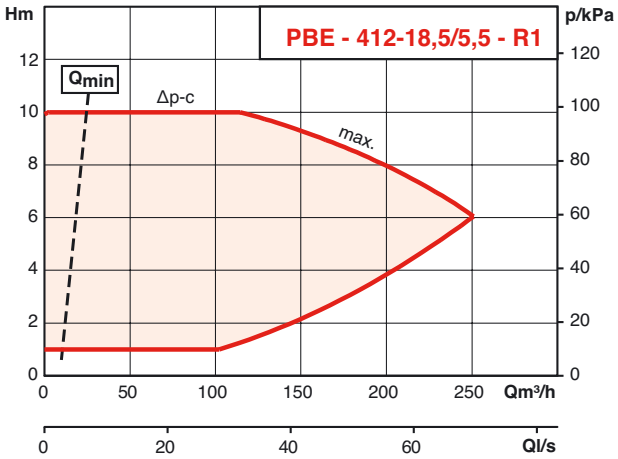

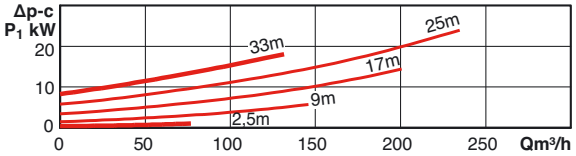

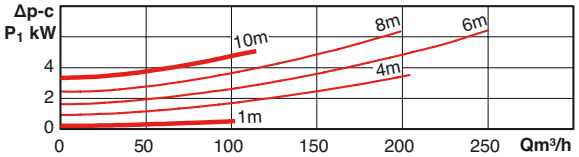

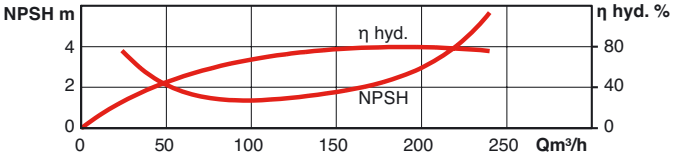

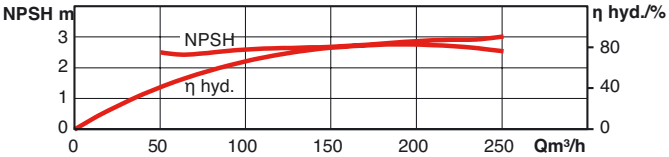

HYDRAULIC PERFORMANCES

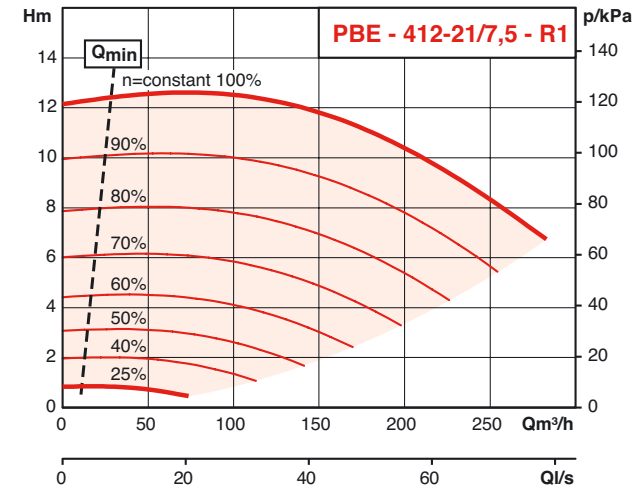

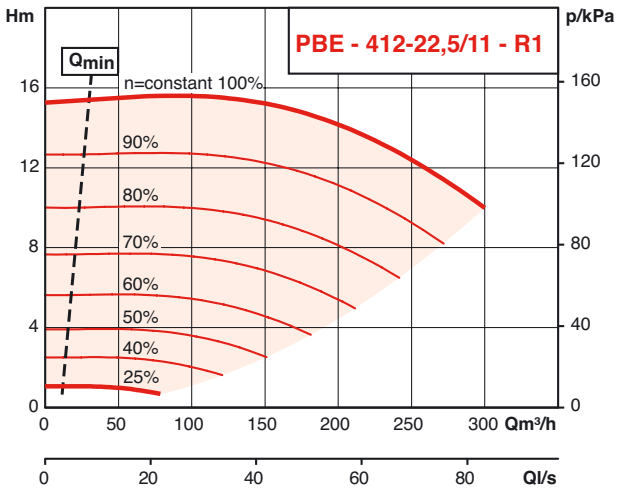

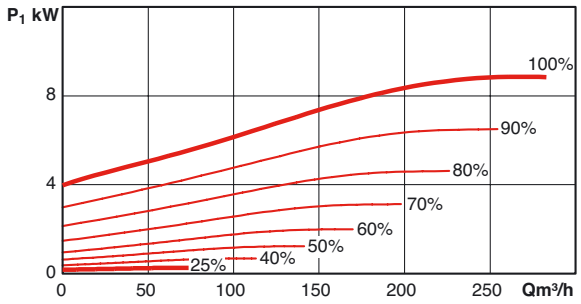

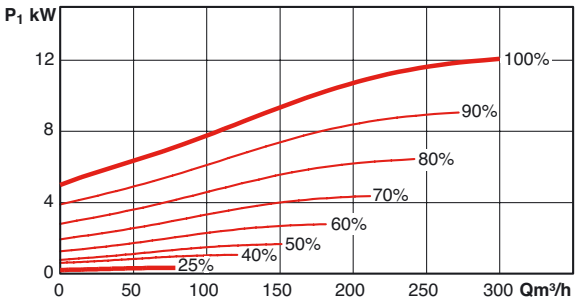

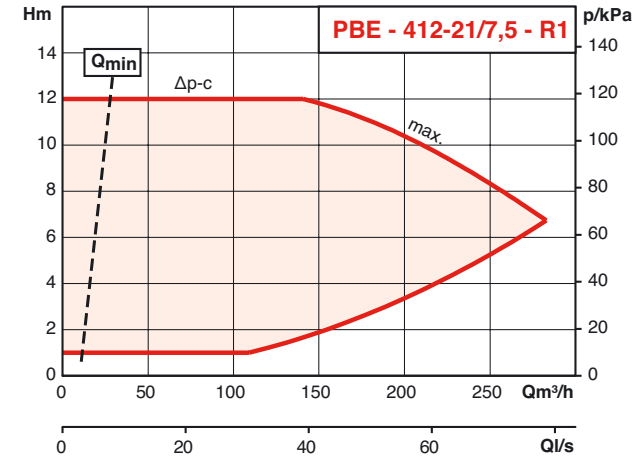

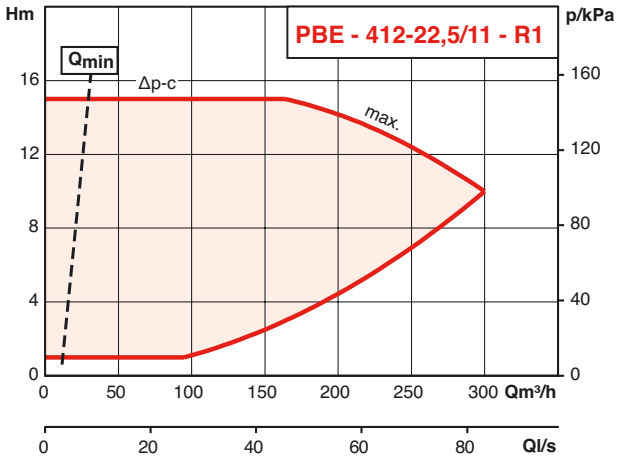

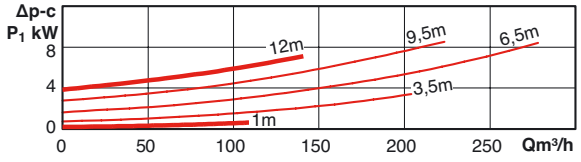

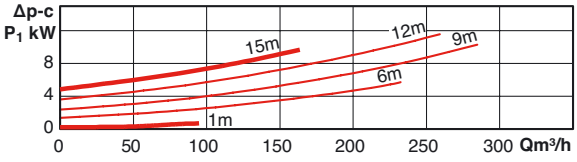

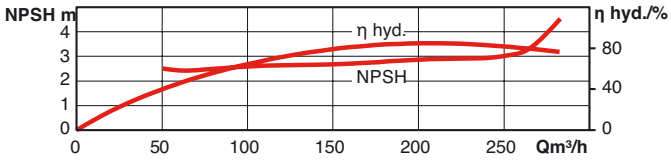

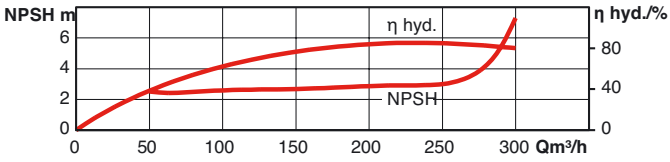

PBE

HYDRAULIC PERFORMANCES

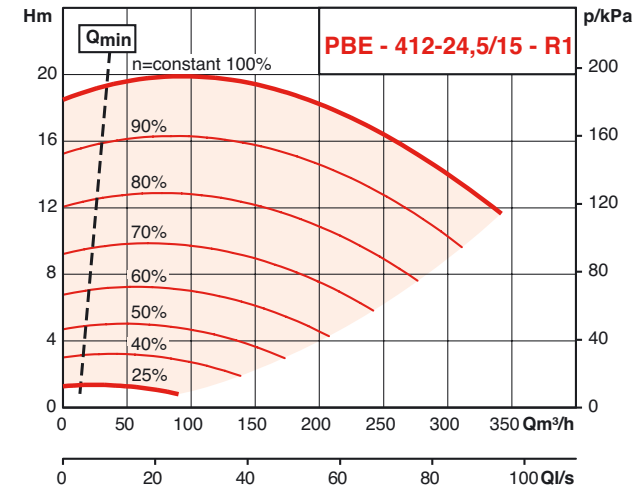

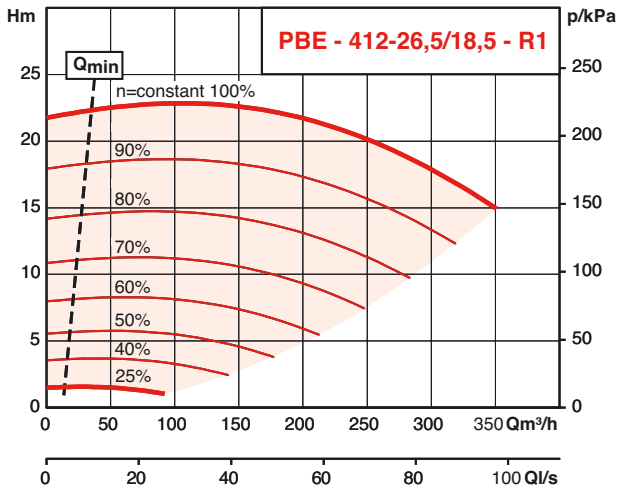

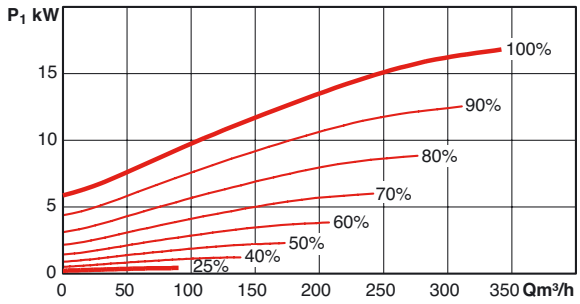

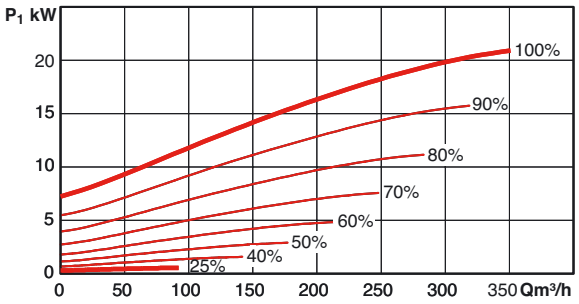

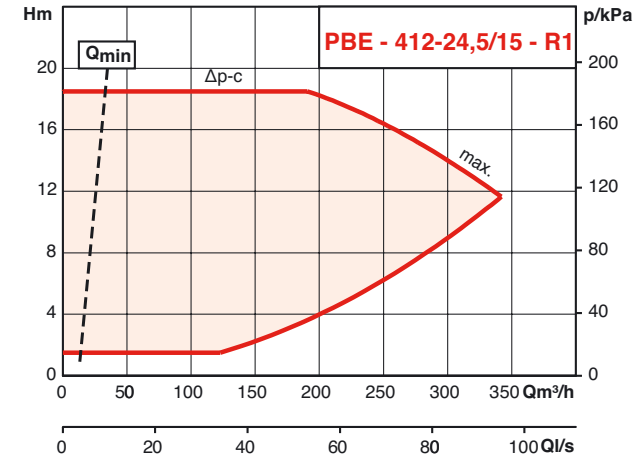

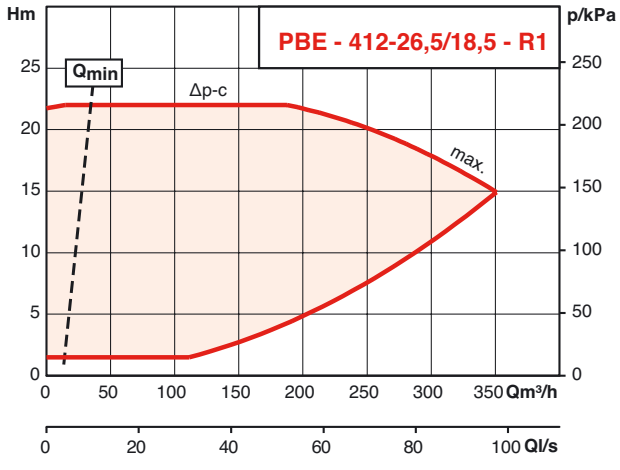

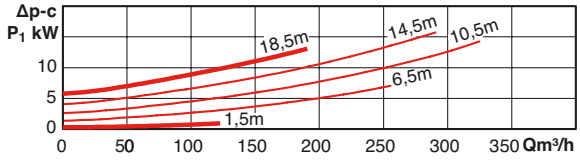

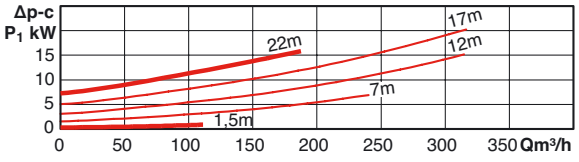

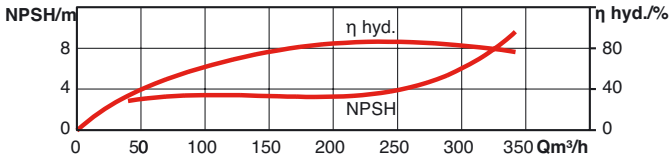

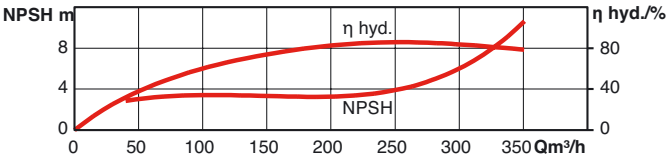

HYDRAULIC PERFORMANCES

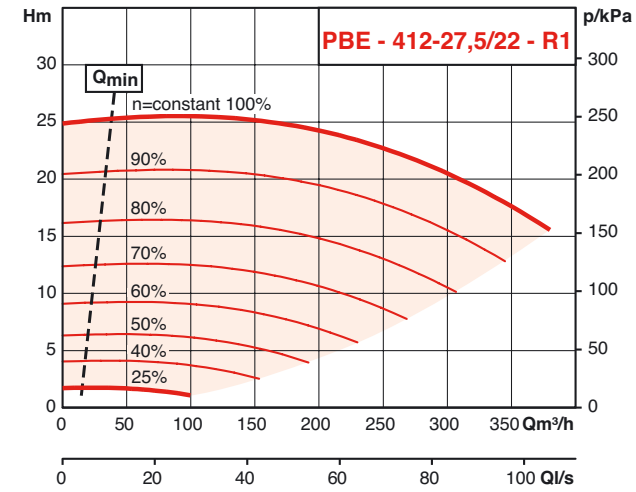

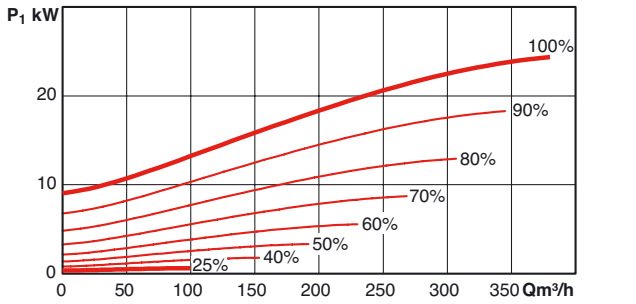

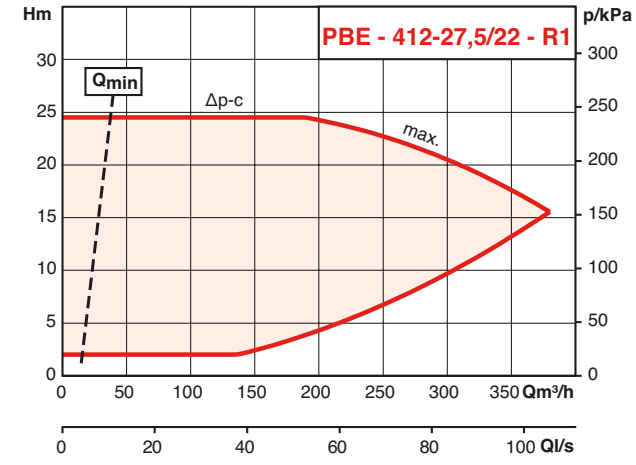

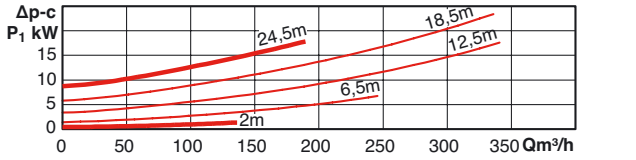

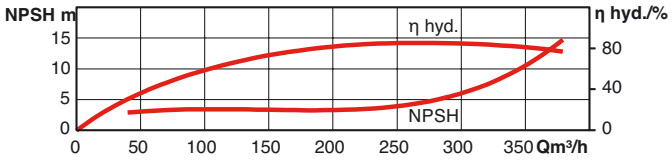

PBE

DIMENSIONS – MOTOR ≤ 4KW

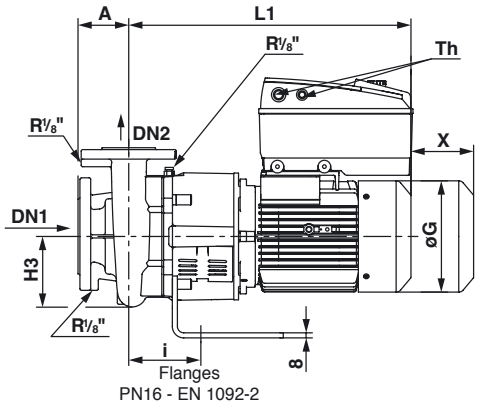

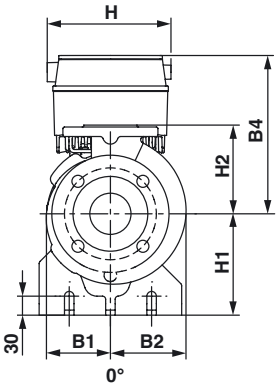

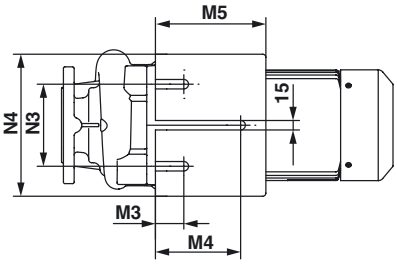

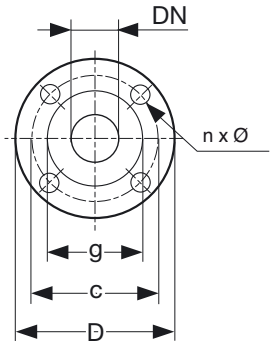

DNA	ØD	Øg	Øc	n x Ø
	mm			n x mm
50	165	99	125	4 x 19
65	185	118	145	4 x 19
80	200	132	160	8 x 19

DNR	ØD	Øg	Øc	n x Ø
	mm			n x mm
32	140	76	100	4 x 19
40	150	84	110	4 x 19
50	165	99	125	4 x 19
65	185	118	145	4 x 19

Item reference	SAP reference	Motor	A	L1	Ø A1	Ø G	H3	X	B max	B1	B2	B4	H	H1	H2	M3	M4	M5	N3	N4
			mm	mm	mm	mm	mm	mm	mm	mm	mm	mm	mm	mm	mm	mm	mm	mm	mm	mm
2126163	PBE203-14/2.2-R1	V1	80	447	200	177	122	95	242	113	129	240	220	160	160	47,5	137,5	185	130	210
2126164	PBE203-15/3-R1	V1	80	487,4	250	196	122	95	242	113	129	255	220	160	160	47,5	137,5	185	130	210
2126165	PBE203-16/4-R1	V1	80	504,4	250	220	122	95	242	113	129	270	220	160	160	47,5	137,5	185	130	210
2126169	PBE204-11/1.5-R1	V1	80	435	200	177	111	100	220	101	119	240	220	160	140	45	135	175	130	225
2126170	PBE204-12/2.2-R1	V1	80	445	200	177	111	100	220	101	119	240	220	160	140	45	135	175	130	225
2126171	PBE204-13/3-R1	V1	80	487	250	196	111	100	220	101	119	255	220	160	140	45	135	175	130	225
2126172	PBE204-14/4-R1	V1	80	504	250	220	111	100	220	101	119	270	220	160	140	45	135	175	130	225
2126179	PBE205-11/3-R1	V1	100	494	250	196	124	110	244	111	133	255	220	160	160	45	135	175	130	225
2126180	PBE205-12/4-R1	V1	100	511	250	220	124	110	244	111	133	270	220	160	160	45	135	175	130	225
2126189	PBE206-12/4-R1	V1	100	516	250	220	155	120	274	123	151	270	220	160	180	45	135	175	130	225

DIMENSIONS – MOTOR ≤ 5,5KW

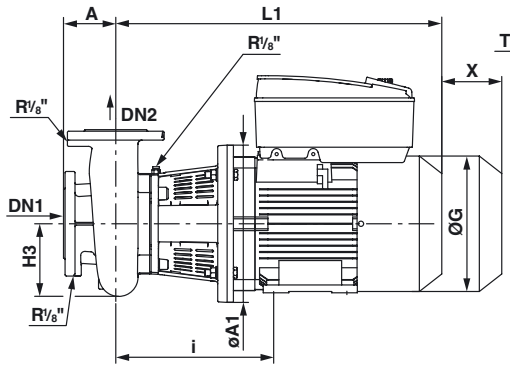

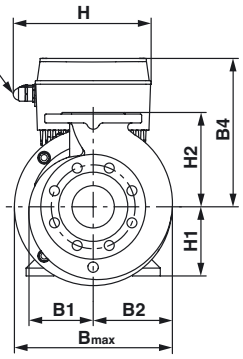

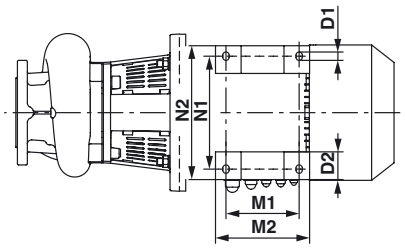

Flanges
PN16 - EN 1092-2

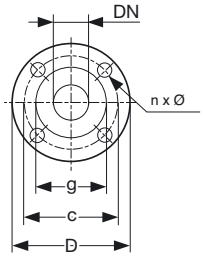

DNA	ØD	Øg	Øc	n x Ø
	mm	mm	mm	n x mm
50	165	99	125	4 x 19
65	185	118	145	4 x 19
80	200	132	160	8 x 19
100	220	156	180	8 x 19
125	250	184	210	8 x 19
150	285	211	240	8 x 23

DNA	ØD	Øg	Øc	n x Ø
	mm	mm	mm	n x mm
32	140	76	100	4 x 19
40	150	84	110	4 x 19
50	165	99	125	4 x 19
65	185	118	145	4 x 19
80	200	132	160	8 x 19
100	220	156	180	8 x 19
125	250	184	210	8 x 19

Item reference	SAP reference	Motor	A	L1	Ø A1	Ø G	H3	X	B max	B1	B2	B4	H	H1	H2	D1	D2	M1	M2	N1	N2
			mm	mm	mm	mm	mm	mm	mm	mm	mm	mm	mm	mm	mm	mm	mm	mm	mm	mm	mm
2126166	PBE203-17/5.5-R1	B35	80	572	325	266	122	95	310	113	129	303	260	132	160	12	53	140	180	216	256
2126167	PBE203-21/7.5-R1	B35	80	579	325	266	122	95	300	113	129	303	260	132	160	12	53	140	180	216	256
2126168	PBE203-22/11-R1	B35	80	708	350	302	122	95	350	113	129	427	320	160	160	15	65	210	305	254	310
2126173	PBE204-16/5.5-R1	B35	80	573	325	266	132	100	310	120	135	303	260	132	160	12	53	140	180	216	256
2126174	PBE204-17/7.5-R1	B35	80	573	325	266	132	100	325	120	135	303	260	132	160	12	53	140	180	216	256
2126175	PBE204-18/7.5-R1	B35	100	586	325	266	145	100	300	145	151	303	260	132	180	12	53	140	180	216	256
2126176	PBE204-21/11-R1	B35	100	715	350	302	145	100	350	145	151	427	320	160	180	15	65	210	305	254	310
2126177	PBE204-22/15-R1	B35	100	715	350	302	145	100	350	145	151	427	320	160	180	15	65	210	305	254	310
2113494	PBE204-23/18.5-R1	B35	100	782	350	302	174	110	350	174	174	427	320	160	225	15	65	254	305	254	310
2126178	PBE204-24/22-R1	B35	100	782	350	302	174	110	350	174	174	427	320	160	225	15	65	254	305	254	310
2126181	PBE205-13/5.5-R1	B35	100	583	325	266	124	110	300	111	133	303	260	132	160	12	53	140	180	216	256
2126182	PBE205-14/7.5-R1	B35	100	583	325	266	124	110	300	111	133	303	260	132	160	12	53	140	180	216	256
2126183	PBE205-15/7.5-R1	B35	100	581	325	266	152	120	325	127	147	303	260	132	180	12	53	140	180	216	256
2126184	PBE205-17/11-R1	B35	100	718	350	302	152	120	350	127	147	427	320	160	180	15	65	210	305	254	310
2126185	PBE205-20/15-R1	B35	100	715	350	302	159	110	350	153	172	427	320	160	200	15	65	210	305	254	310
2126186	PBE205-21/18.5-R1	B35	100	778	350	302	159	110	350	153	172	427	320	160	200	15	65	254	305	254	310
2126187	PBE205-22/22-R1	B35	100	778	350	302	159	110	350	153	172	427	320	180	200	15	65	254	305	254	310
2126188	PBE405-27/5.5-R1	B35	100	593	300	266	179	110	360	174	186	303	260	132	225	12	53	140	180	216	256
2126190	PBE206-13/5.5-R1	B35	100	617	325	266	155	120	300	123	151	303	260	132	180	12	53	140	180	216	256
2126191	PBE206-14/7.5-R1	B35	100	623	325	266	155	120	300	123	151	303	260	132	180	12	53	140	180	216	256
2126192	PBE206-16/11-R1	B35	100	728	350	302	155	120	350	136	162	427	320	160	200	15	65	210	305	254	310
2126193	PBE206-17/15-R1	B35	100	728	350	302	155	120	350	136	162	427	320	160	200	15	65	210	305	254	310
2126194	PBE206-19/18.5-R1	B35	100	732	350	302	170	120	356	156	181	427	320	160	225	15	65	254	305	254	310
2126195	PBE206-21/22-R1	B35	100	732	350	302	170	120	356	156	181	427	320	180	225	15	65	254	305	254	310
2126196	PBE406-24/5.5-R1	B35	100	620	300	266	200	90	387	214	237	303	260	132	250	12	53	140	180	216	256
2113533	PBE406-26.5/7.5-R1	B35	100	620	300	266	200	90	387	214	237	303	260	132	250	12	53	140	180	216	256
2126197	PBE208-14.5/11-R1	B35	125	735	350	302	178	135	380	160	196	427	320	160	225	15	65	210	305	254	310
2126198	PBE208-15/15-R1	B35	125	735	350	302	178	135	380	160	196	427	320	160	225	15	65	210	305	254	310
2126199	PBE208-16/18.5-R1	B35	125	735	350	302	178	135	380	160	196	427	320	160	225	15	65	254	305	254	310
2126200	PBE208-16.5/22-R1	B35	125	735	350	302	178	135	380	160	196	427	320	180	225	15	65	254	305	254	310
2126201	PBE408-22/5.5-R1	B35	125	605	300	266	178	120	367	170	197	303	260	132	250	12	53	140	180	216	256
2126202	PBE408-25/7.5-R1	B35	125	676	300	266	199	120	410	192	218	303	260	132	280	12	53	140	180	216	256

PBE

DIMENSIONS – MOTOR ≥ 5,5KW

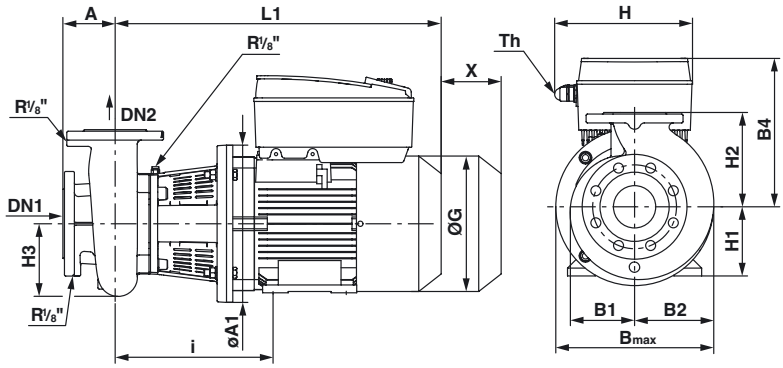

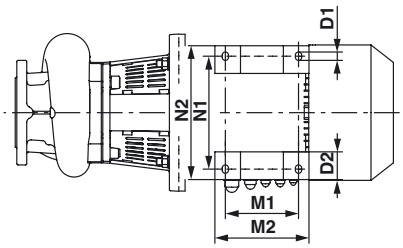

Brides
PN16 - EN 1092-2

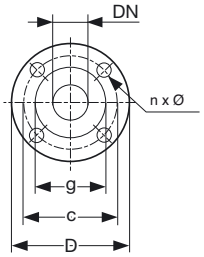

DNA	ØD	Øg	Øc	n x Ø
	mm	mm	mm	n x mm
50	165	99	125	4 x 19
65	185	118	145	4 x 19
80	200	132	160	8 x 19
100	220	156	180	8 x 19
125	250	184	210	8 x 19
150	285	211	240	8 x 23

DNA	ØD	Øg	Øc	n x Ø
	mm	mm	mm	n x mm
32	140	76	100	4 x 19
40	150	84	110	4 x 19
50	165	99	125	4 x 19
65	185	118	145	4 x 19
80	200	132	160	8 x 19
100	220	156	180	8 x 19
125	250	184	210	8 x 19

Item reference	SAP reference	Motor	A	L1	Ø A1	Ø G	H3	X	B max	B1	B2	B4	H	H1	H2	D1	D2	M1	M2	N1	N2
			mm	mm	mm	mm	mm	mm	mm	mm	mm	mm	mm	mm	mm	mm	mm	mm	mm	mm	mm
2126203	PBE408-27/11-R1	B35	125	727	350	302	199	120	410	192	218	427	320	160	280	15	65	210	305	254	310
2126204	PBE410-20/5.5-R1	B35	125	618	300	266	196	120	387	176	211	303	260	132	280	12	53	140	180	216	256
2126205	PBE410-22/7.5-R1	B35	125	618	300	266	196	120	387	176	211	303	260	132	280	12	53	140	180	216	256
2126206	PBE410-25/11-R1	B35	140	741	350	302	219	130	432	200	232	427	320	160	280	15	65	210	305	254	310
2126207	PBE410-27/15-R1	B35	140	741	350	302	219	130	432	200	232	427	320	160	280	15	65	210	305	254	310
2126208	PBE410-30.5/18.5-R1	B35	140	837	350	370	250	120	560	263	297	475	320	160	315	15	70	241	342	279	339
2126209	PBE410-31.5/22-R1	B35	140	837	350	370	250	120	560	263	297	475	320	160	315	15	70	279	342	279	339
2126210	PBE412-18.5/5.5-R1	B35	140	631	300	266	232	120	513	232	280	303	260	132	315	12	53	140	180	216	256
2126211	PBE412-21/7.5-R1	B35	140	631	300	266	232	120	513	232	280	303	260	132	315	12	53	140	180	216	256
2126212	PBE412-22.5/11-R1	B35	140	762	350	302	232	120	513	232	280	427	320	160	315	15	65	210	305	254	310
2126213	PBE412-24.5/15-R1	B35	140	781	350	302	250	120	546	252	294	427	320	160	355	15	65	210	305	254	310
2126214	PBE412-26.5/18.5-R1	B35	140	842	350	370	250	120	546	252	294	475	320	180	355	15	70	241	342	279	339
2126215	PBE412-27.5/22-R1	B35	140	842	350	370	250	120	546	252	294	475	320	180	355	15	70	279	342	279	339

OPERATING LIMITS

Capacities up to :	**250 m³/h**
Heads up to :	**36 m**
Max. operating pressure :	**10 bar**
Temperature range :	**–8° à +100°C**
ND of ports :	**32 à 150**

+ 130 °C with special mechanical seal.

NRG

HORIZONTAL PUMPS
Heating - Air conditioning
Secondary hot water
Standard line
50 Hz

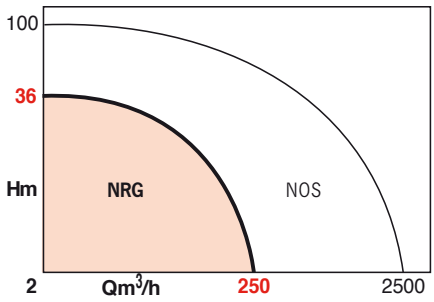

APPLICATIONS

• Housing
- Low pressure heating systems.
- Chilled water systems.
- Cooling systems.
- Recycling loop...

• Industriy
- Cold water, clear, neutral, and low viscosity liquids...

ADVANTAGES

- **Pump bearing with sleeve bearings (the only one available on the market) for silent pump unit operation.**
- **Cast base provides optimum absorption of vibrations.**
- **Mechanical seal: no leaks, no maintenance during operation.**
- **Reduced monitoring and maintenance requirements.**
- **Traditional equipment, tested quality.**
- **Interchangeability with installed pumps.**

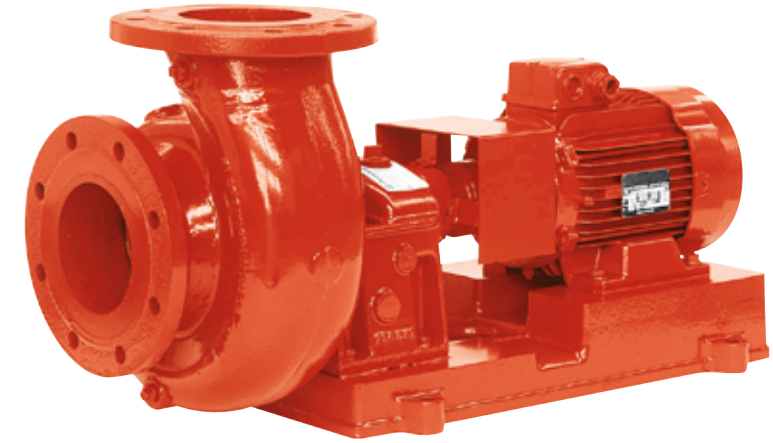

• NRG 1222 - A2C bearing, ND 125.

• Oil-lubricated sleeve bearings with visual check of level

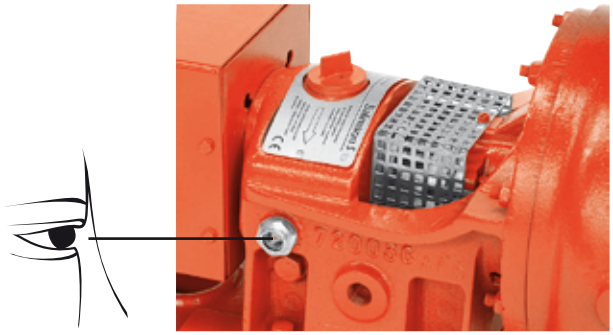

• Optional mechanical seal for + 130 °C
Graphite/Carbide/EP

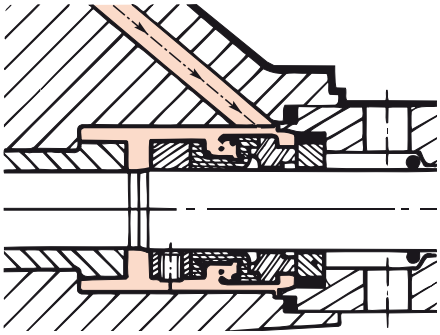

NRG

DESIGN

• Hydraulic part

- Centrifugal, horizontal shaft, single-stage [1].
- Axial suction, radial discharge upward.
- Pedestal bearing fitted with oil lubricated sleeve bearings (not included), as well as filler and level check plugs.
- Mechanical seal.
- Pump connected to motor by spring coupling provided with a guard.

• Motor

Standardized, with ball-bearings.
Reserve power (in 50% of cases) extending the service life of the unit without increasing power consumption.

Vitesse :	1450 rpm
Winding ≤ 4 kW :	230-400 V
	> 4 kW : 400 V Δ
Frequency :	50 Hz
	(option 60 Hz)
Insulation class :	155 (F)
Protection index :	IP 44
EC conformity :	EN 809

STANDARD CONSTRUCTION

Main parts	Material
Pump casing	Cast iron FGL 250
Discharge end	Cast iron FGL 250
Closed, radial impeller	Cast iron FGL 250
Oil lubricated bearing	Cast iron FGL 250
Pump shaft	Steel X30 Cr 13
Sleeve bearings	Cast iron or Bronze
Pump sleeve bearings	Ceramic
Casing gasket	Ethylene-Propylene
Mechanical seal	Graphite/Ceramic/EP

[1] NRG 781 and 782 pump with 2 impellers..

SECTIONAL DRAWING

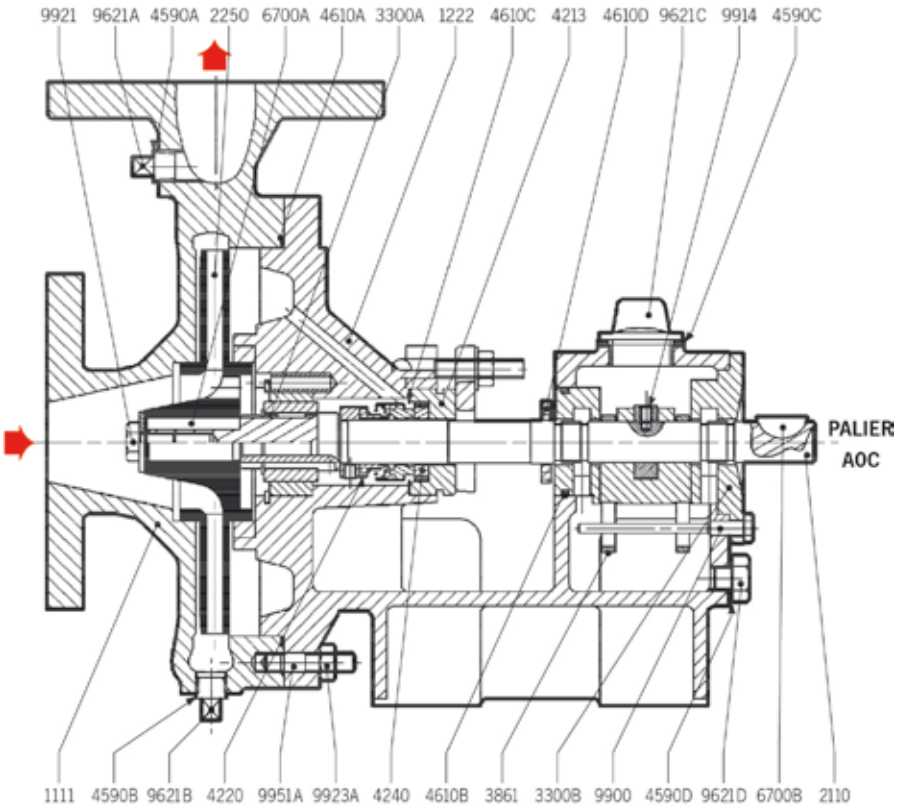

- 1111A -Pump casing
- 1222A -End cover with seal
- 2110A -Pump shaft
- 2250A -Closed radial impeller
- 2520A -Locating ring
- 2530A -Stop ring
- 2912A -Lock nut
- 3011A -Ball bearing
- 3110A -Pedestal bearing
- 3244A -Ball-bearing housing
- 3245A -Sleeve bearing support
- 3300A -Pump sleeve bearing
- 3300B -Sleeve bearing
- 3300C -Friction ring
- 3712A -Ball-bearing nut
- 3861A -Lubrication ring
- 4213A -Ring support
- 4220A -Rotary ring support } mechanical
- 4240A -Stationary ring } seal
- 4590A -Gasket under plug 9621A
- 4590B -Gasket under plug 9621B
- 4590C -Gasket under plug 9621C
- 4590D -Gasket under plug 9621D
- 4590E -Gasket (ball-bearing box)
- 4590F -Gasket (ring support)
- 4610A -O-ring (casing/end)
- 4610B -O-ring (sleeve bearing/bearing)
- 4610C -O-ring (ring support)
- 4610D -Deflector
- 6545A -Stop circlip
- 6700A -Impeller key
- 6700B -Coupling key
- 9322A -Connecting strip
- 9621A -Plug (pressure gauge)
- 9621B -Plug (casing drain)
- 9621C -Plug (bearing oil filling)
- 9621D -Plug (oil drain)
- 9900A -Special rod screw
- 9901A -Flat head screw
- 9906A -Hexagonal screw
- 9908A -Screw (deflector)
- 9914A -Screw (sleeve bearing)
- 9921A -Impeller lock nut
- 9923A -Nut (stud 9951a)
- 9923B -Nut (stud 9951b)
- 9929A -Impeller nut
- 9951A -Stud (pump casing)
- 9951B -Stud (bearing)

(•) Recommended spare parts

SECTIONAL DRAWINGS

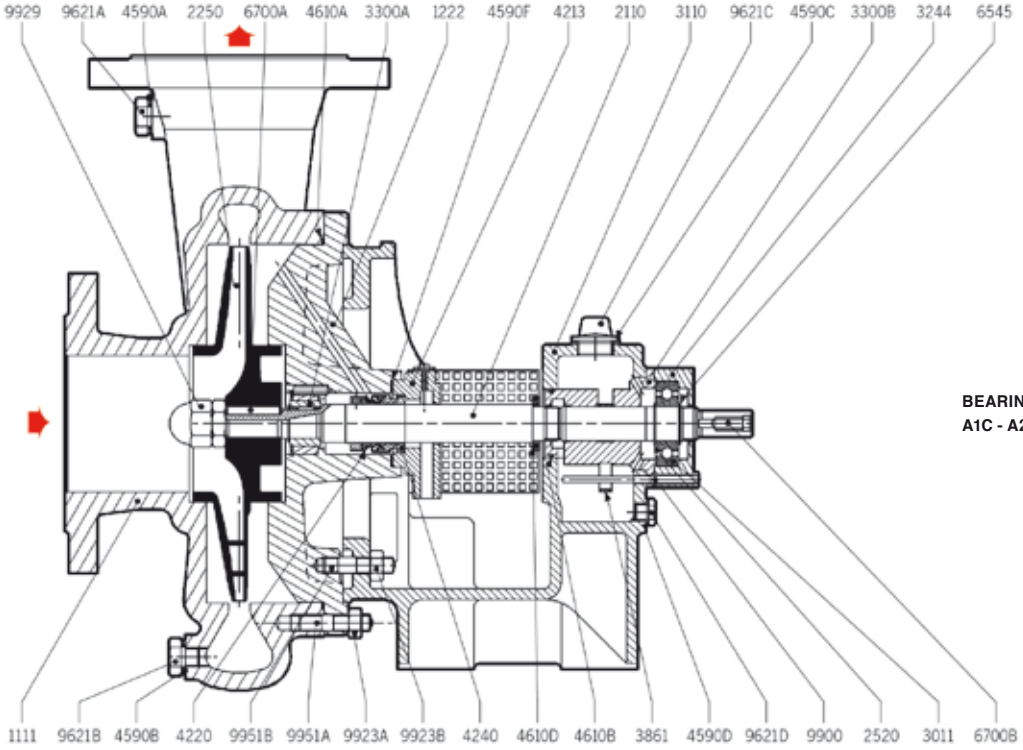

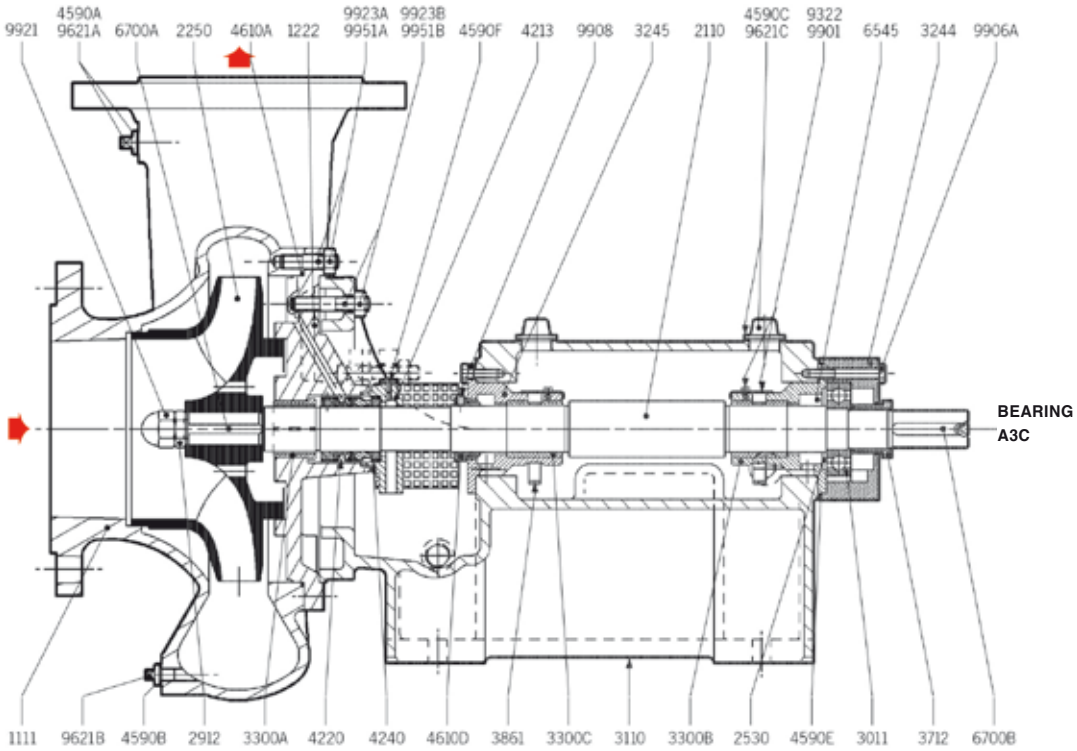

NRG

GENERAL SELECTION GRAPH AT 1450 RPM

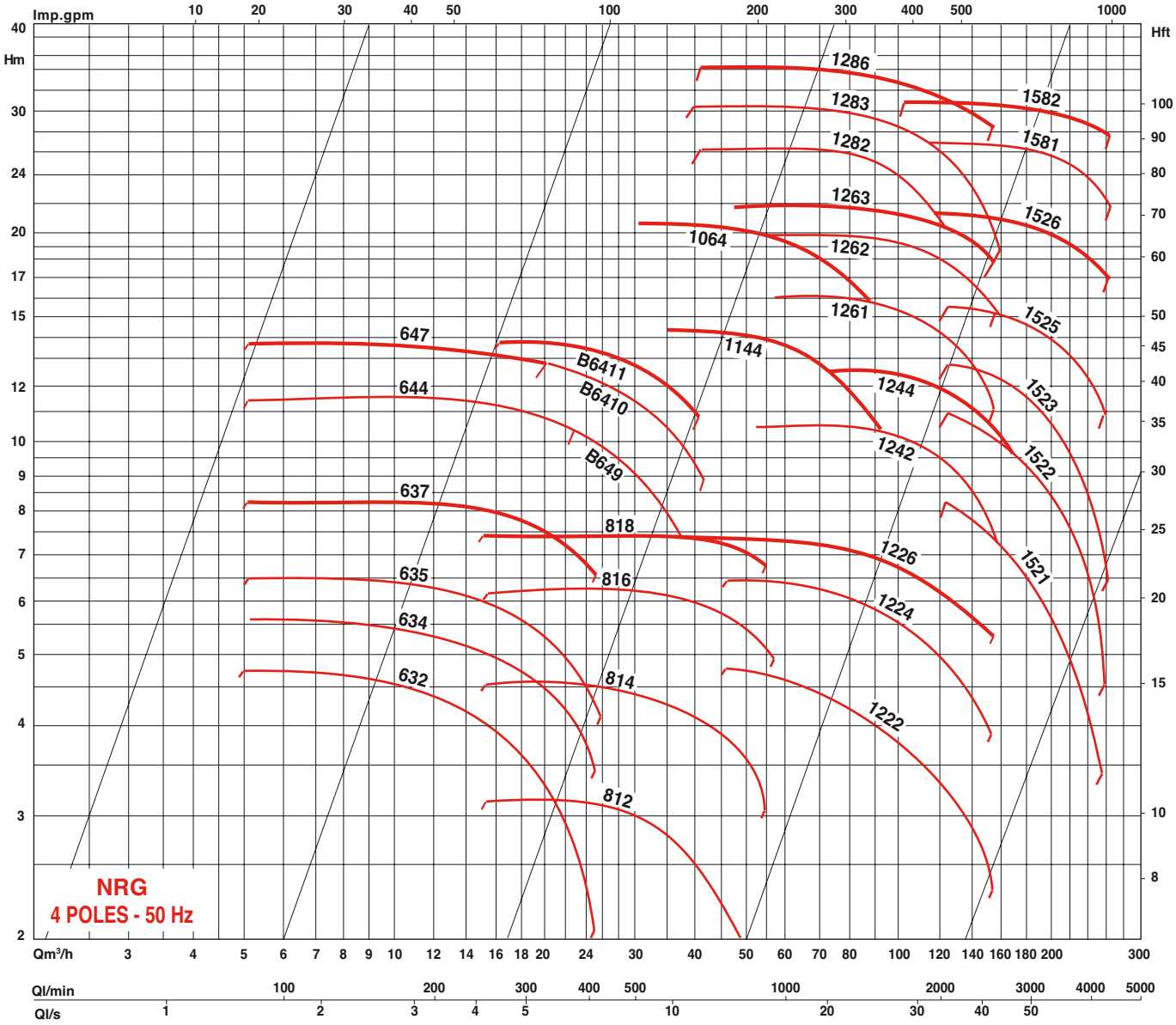

FEATURES

a) Electrical data

- Complete unit with electrical motor :
- Three-phase 230-400 V - 50 Hz ≤ 4 kW,
- Three-phase 400 V - 50 Hz > 4 kW.
- Motor must be protected by circuit breake.

b) Installation

- On level foundation.
- Attached to base.
- Connection to installation: welded round PN10 counter-flanges (screw-on for models NRG 311 to 314).

c) Packaging

- Supplied with gaskets and bolts, without counter-flanges (optional).

d) Maintenance

- Repair: see recommended spare parts (•) subject to wear.

ACCESSORIES

- Motor protection circuit breaker.
- Pressure gauge kit.
- Round, screw-on or welded counterflanges.
- Isolating valves.
- Check valves.
- Anti-vibration sleeves.

ELECTRICAL DATA AND DIMENSIONS

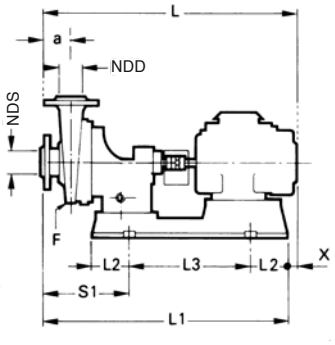

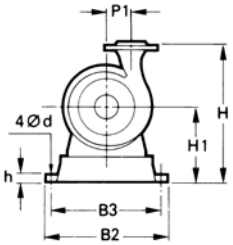

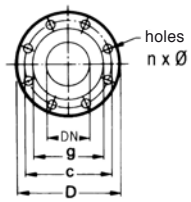

Suct.-disch. flanges - PN10 with gasket contact face

ND	D	c	g	holes
	mm	mm	mm	n x Ø
65	185	145	122	4 x 18
80	200	160	138	8 x 18
100	220	180	158	8 x 18
125	250	210	184	8 x 18
150	285	240	212	8 x 22

- For 3-phase 230-400 V motors ≤ 4 kW: star or delta connection.
- For 3-phase 400 V Δ > 4 kW: star-delta connection.

Order reference	Bearing	power	Full-load Current in A	Ports		L	H	a	L1	B2	S1	H1	P1*	X	L2	L3	B3	Ød	h	Drain port	mass ±	Counter-flange to be order for pipe Ø
		P2		suct.	disch.																	
		kW	3~400V	NDS	NDD	mm	mm	mm	mm	mm	mm	mm	mm	mm	mm	mm	mm	mm	mm	F	kg	
NRG 311	A0C	0,75	1,63	32	32	610	315	70,5	600	300	205	165	0	10	80	315	265	16	30	1/4”	51	
NRG 312	A0C	0,75	1,63	32	32	610	315	70,5	600	300	205	165	0	10	80	315	265	16	30	1/4”	51	33-42 (à visser)
NRG 313	A0C	0,75	1,63	32	32	610	315	70,5	600	300	205	165	0	10	80	315	265	16	30	1/4”	51	
NRG 314	A0C	0,75	1,63	32	32	610	315	70,5	600	300	205	165	0	10	80	315	265	16	30	1/4”	51	
NRG 631	A0C	0,75	1,63	65	65	630,5	345	83	621	300	225,5	165	0	10	80	315	265	16	30	1/4”	61	
NRG 632	A0C	0,75	1,63	65	65	630,5	345	83	621	300	225,5	165	0	10	80	315	265	16	30	1/4”	61	
NRG 634	A0C	0,75	1,63	65	65	630,5	345	83	621	300	225,5	165	0	10	80	315	265	16	30	1/4”	61	66-76
NRG 635	A0C	0,75	1,63	65	65	630,5	345	83	621	300	225,5	165	0	10	80	315	265	16	30	1/4”	61	
NRG 637	A0C	0,75	1,63	65	65	630,5	345	83	621	300	225,5	165	0	10	80	315	265	16	30	1/4”	61	
NRG 644	A0C	1,5	3,26	65	65	709	385	110	646	300	251	165	0	63	80	315	265	16	30	1/4”	80	66-76
NRG 647	A0C	1,5	3,26	65	65	709	385	110	646	300	251	165	0	63	80	315	265	16	30	1/4”	80	
NRG 682	A1C	3	5,96	65	65	821,5	465	110	770	330	265	195	0	51,5	80	425	295	16	30	1/4”	150	
NRG 683	A1C	3	5,96	65	65	821,5	465	110	770	330	265	195	0	51,5	80	425	295	16	30	1/4”	150	66-76
NRG 686	A1C	3	5,96	65	65	821,5	465	110	770	330	265	195	0	51,5	80	425	295	16	30	1/4”	150	
NRG 688	A1C	4	8,07	65	65	821,5	465	110	770	330	265	195	0	51,5	80	425	295	16	30	1/4”	162	
NRG 812	A0C	0,75	1,63	80	80	669	365	101	659	300	264	165	0	10	80	315	265	16	30	1/2”	67	
NRG 814	A0C	0,75	1,63	80	80	669	365	101	659	300	264	165	0	10	80	315	265	16	30	1/2”	67	82-89
NRG 816	A0C	1,5	3,26	80	80	722	365	101	659	300	264	165	0	63	80	315	265	16	30	1/2”	72	
NRG 818	A0C	1,5	3,26	80	80	722	365	101	659	300	264	165	0	63	80	315	265	16	30	1/2”	72	
NRG B649	A1C	1,5	3,26	80	65	760,5	415	110	763	330	258	195	0	-2,5	80	425	295	16	30	1/4”	90	82-89
NRG B6410	A1C	1,5	3,26	80	65	760,5	415	110	763	330	258	195	0	-2,5	80	425	295	16	30	1/4”	90	et
NRG B6411	A1C	3	5,96	80	65	814,5	415	110	763	330	258	195	0	51,5	80	425	295	16	30	1/4”	110	66-76
NRG 1142	A1C	4	8,07	100	80	849,5	455	130	798	330	293	195	0	51,5	80	425	295	16	30	1/4”	157	102-114
NRG 1144	A1C	4	8,07	100	80	849,5	455	130	798	330	293	195	0	51,5	80	425	295	16	30	1/4”	157	et 82-89

*** Please note dimension P1** If P1 = 0 (zero) the discharge side axis is brought within the suction side axis.

NRG

ELECTRICAL DATA AND DIMENSIONS

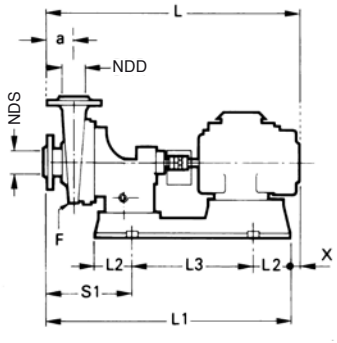

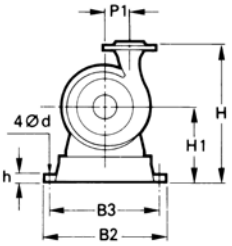

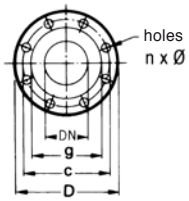

Suct.-disch. flanges - PN10 with gasket contact face

ND	D	c	g	holes

- For 3-phase 230-400 V motors up to 4 kW: star or delta connection.
- For 3-phase 400 V Δ > 4 kW: star-delta connection.

Order reference	Bearing	power	Full-load Current in A	Ports		L	H	a	L1	B2	S1	H1	P1*	X	L2	L3	B3	Ød	h	Drain port	mass ±	Counter-flange to be order for pipe Ø
		P2		suct.	disch.																	
		kW	3~400V	DNA	DNR	mm	mm	mm	mm	mm	mm	mm	mm	mm	mm	mm	mm	mm	mm	F	kg	
NRG 1061	A2C	4	8,07	100	100	910	505	128	860	375	310	235	105	50	100	450	340	16	30	3/8”	199	
NRG 1062	A2C	4	8,07	100	100	910	505	128	860	375	310	235	105	50	100	450	340	16	30	3/8”	199	102-114
NRG 1064	A2C	5,5	10,5	100	100	979	530	128	960	405	335	260	105	19	100	525	370	16	30	3/8”	200	
NRG 1222	A1C	1,5	3,26	125	125	787,5	415	125	790	330	285	195	650	-2,5	80	425	295	16	30	3/8”	92	
NRG 1224	A1C	3	5,96	125	125	841,5	415	125	790	330	285	195	650	51,5	80	425	295	16	30	3/8”	130	127-140
NRG 1226	A1C	3	5,96	125	125	841,5	415	125	790	330	285	195	650	51,5	80	425	295	16	30	3/8”	130	
NRG 1242	A2C	4	8,07	125	125	920	515	134	870	375	320	235	115	50	100	450	340	16	30	3/8”	192	127-140
NRG 1244	A2C	5,5	10,5	125	125	989	540	134	970	405	345	260	115	19	100	525	370	16	30	3/8”	198	
NRG 1261	A2C	7,5	14,1	125	100	1037	540	134	970	405	345	260	130	67	100	525	370	16	30	3/8”	250	127-140
NRG 1262	A2C	7,5	14,1	125	100	1037	540	134	970	405	345	260	130	67	100	525	370	16	30	3/8”	250	et
NRG 1263	A2C	11	21,2	125	100	1145	563	134	1265	450	415	283	130	-115	190	660	400	24	53	3/8”	280	102-114
NRG 1282	A3C	11	21,2	125	100	1390	623	140	1400	490	450	303	155	-5	210	740	440	24	53	3/8”	340	127-140
NRG 1283	A3C	11	21,2	125	100	1390	623	140	1400	490	450	303	155	-5	210	740	440	24	53	3/8”	352	et
NRG 1286-T36	A3C	18,5	35,1	125	100	1456	623	140	1400	490	450	303	130	61	210	740	440	24	53	3/8”	360	102-114
NRG 1521	A3C	7,5	14,1	150	150	1297	603	160	1295	450	445	303	130	7	190	660	400	24	53	3/8”	238	
NRG 1522	A3C	7,5	14,1	150	150	1297	603	160	1295	450	445	303	130	7	190	660	400	24	53	3/8”	238	
NRG 1523	A3C	7,5	14,1	150	150	1297	603	160	1295	450	445	303	130	7	190	660	400	24	53	3/8”	238	150-159
NRG 1525-T36	A3C	15	28,7	150	150	1449	603	160	1415	490	465	303	130	39	210	740	440	24	53	3/8”	334	
NRG 1526-T36	A3C	15	28,7	150	150	1449	603	160	1415	490	465	303	130	39	210	740	440	24	53	3/8”	334	
NRG 1581-T36	A3C	22	40,5	150	125	1504	623	146	1410	490	460	303	170	99	210	740	440	24	53	3/8”	447	150-159
NRG 1582-T36	A3C	22	40,5	150	125	1504	623	146	1410	490	460	303	170	99	210	740	440	24	53	3/8”	447	et 127-140

*** Please note dimension P1** If P1 = 0 (zero) the discharge side axis is brought within the suction side axis.

OPERATING RANGE

Flow rate up to:	**450 m³/h**
Mano. head up to:	**150 mCE**
Operating pressure:	**16 bar**
Frequency range:	**-20 to +120°C**
Hot water up to:	**+120°C**
reference MEI*:	**≥ 0,10**

*Minimum Efficiency Index

NOS

SINGLE STAGE CENTRIFUGAL PUMPS EN 733 (NFE 44111), ISO 5199

Heating – Air conditioning
Industry – Agriculture

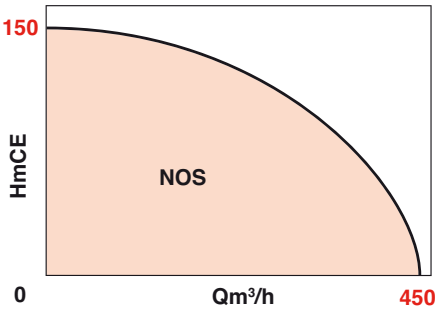

APPLICATIONS

Pumping of clear or slightly cloudy fluids without solid particles in the following areas of application :

- Heating and air conditioning,
- General industry, plastics, paint, textiles, paper, etc.
- Food, pharmaceutical industries, etc.
- Fire fighting*
- ACS upon request
- **ACS upon request**

* the recommended maximum pump speeds must be respected

ADVANTAGES

- **Hydraulic performances and functional connection dimensions in line with the standard EN 733 in 39 sizes.**
- **Strengthened shaft and bearings to comply with the ISO 5199 standard.**
- **The standard range is equipped with a cast iron frame to provide improved overall rigidity.**
- **Easy maintenance thanks to the "process" system allowing for the dismantling of the mobile section without detaching the pump housing or moving the motor (with the spacer option).**

• **NOS** bare shaft version

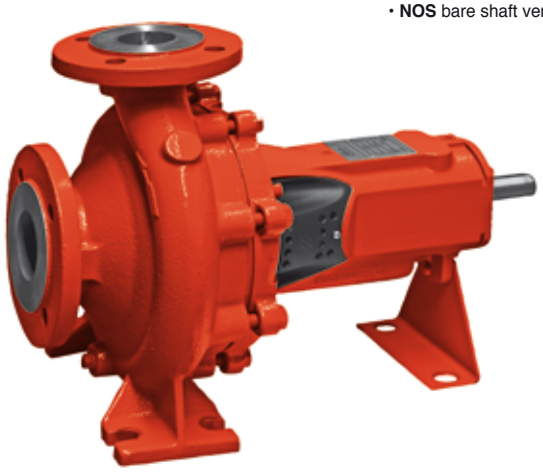

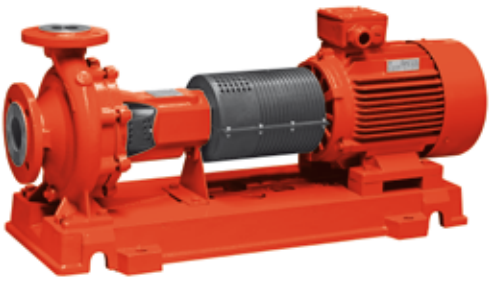

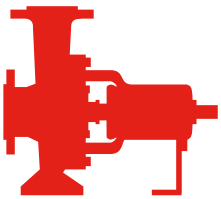



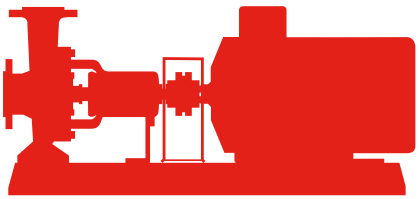

NOS

DESIGN

• Hydraulic section:

- Molecular centrifuge, horizontal axis Axial suction, upward radial discharge.
- Mounting brackets under the body.
- Monobloc bearing, strengthened shaft guide bearings lubricated with grease or oil bath (according to option).
- Sealed by mechanical seal directly assembled on the shaft or by packing with shaft sleeve.
- Adaptation of the impeller diameter to obtain a given operating point.

• Motor

Standardised according to I.E.C. and DIN/ VDE 0530

Speed:	1450 – 2900 rpm
Voltage:	230 / 400 V
in excess of 4 kW:	400 / 690V
Frequency:	50 Hz - 60 Hz*
Insulation category:	155 (F)
Protection:	IP 55
CE conformity:	EN 809

* (Contact us)

DESCRIPTION

Flange connection:
ML material: DIN 2533 PN 16

Bearings:
Bearings 25, 35 and 45 : Two ball bearings, permanently greased (2Z), description B, or lubricated with oil, description C.

Observation: the technical recommendations and security rules must be observed.
(consult the service launch instruction).

Flange position: Axial suction flange, radial discharge flange upwards.

Housing seal:
The standard material is fibre.

SPECIFICATION

Housing
Open on drive side to allow for the dismantling of the mechanical structure from the rear.
Mounting brackets under the spiral.
Axial suction, upward radial discharge.
Flanges machined according to standard NFE 29201
(DIN 2533).
- BN16 flanges.

Base
Fixed between the housing and the bearing Provided with a case for the shaft sealing system, mechanical seal or packing.

Bearing
Monobloc, generously dimensioned to correspond to the ISO 5199 standard and supported by a stand. Ball bearings with deep shaft guide groove lubricated with grease. A centrifugal deflector protects against the penetration of liquid.

Shaft
Generously dimensioned to correspond to the ISO 5199 standard extending the lifespan of the seal. Shaft with packed seal.

Impeller
Cast iron or bronze
Closed, high output radial impeller with rear seal and balancing holes. Adapted (trimmed) on request to obtain the Q/H required by the installation.
Stainless steel upon request.

Shaft seal
Standardised simple mechanical seal adapted to the pumped liquid which does not require any maintenance during operation.
Packing possible upon request.
EPDM carbide/carbide seal or viton upon request.

Coupling
Standard, semi-elastic with or without spacing piece according to requirements.

IDENTIFICATION

NOS 32 / 200 B - 0.75 - 4 - 05

- Standardised pump code
- Discharge opening DN in mm
- Maximum impeller diameter in mm
- Hydraulic type
- Motor power in KW
  Nothing = no motor
- 2 or 4 pole motor
  Nothing = no motor

Structural variants		Code	01	02	05	06	08	10	11	12	23	24	26	44
Pump type	Pump + motor + base		•	•	•			•	•	•	•	•		
	Bare pump					•	•						•	•
Coupling	With spacer			•					•	•	•			
	Without spacer		•		•			•				•		
Housing	EN GJL 250		•	•	•	•	•	•	•	•	•	•	•	•
Impeller	EN GJL 250		•	•	•	•	•			•				
	CUSN8							•	•		•	•	•	•
Shaft	X20Cr13		•	•	•	•	•	•	•	•	•	•	•	•
Shaft sleeve	X20Cr13		•	•		•		•	•				•	
Braid	GRAPHITE / PTFE		•	•		•		•	•				•	
Packing	Carbon/Carbide Si/EPDM				•		•			•	•	•		•

DESCRIPTION

Bearing according to pump sizes:

Bearing of 25	32/125	32/160	32/200	32/250	40/125	40/160	40/200	40/250	50/125	50/160	50/200	50/250	65/125	65/160	65/200	80/160
Bearing of 35	40/315	50/315	65/250	65/315	80/200	80/250	80/315	100/160	100/200	100/250	100/315	125/200	125/250	150/200	150/250	
Bearing of 45	80/400	100/400	125/315	125/400	150/315	150/400										

Motor power:

The standard electric motors equipping the NOS pumps are IM B3 models.

When determining the motor power, we recommend applying the following safety margins:

Up to 4 kW : +25%

4 to 7,5 kW : +20%

in excess of 7,5 kW : +15%

The following maximum speeds must be respected according to the pump sizes:

Model	Vmax. (min-1)
32/125 32/160 32/200	3600
40/125 40/160 40/200	
50/125 50/160 50/200	
65/125 65/160 65/200	
80/160 80/200	
100/160 100/200	

Model	Vmax. (min-1)
32/250	3000
40/250	
50/250	
65/250	
80/250	
100/250	
125/200	

Modèle	Vmax. (min-1)
40/315	1800
50/315	
65/315	
80/315	
80/400	
100/315 100/400	
125/250 125/315 125/400	
150/200 150/250 150/315 150/400	

ORIGINAL SECTIONAL DRAWING

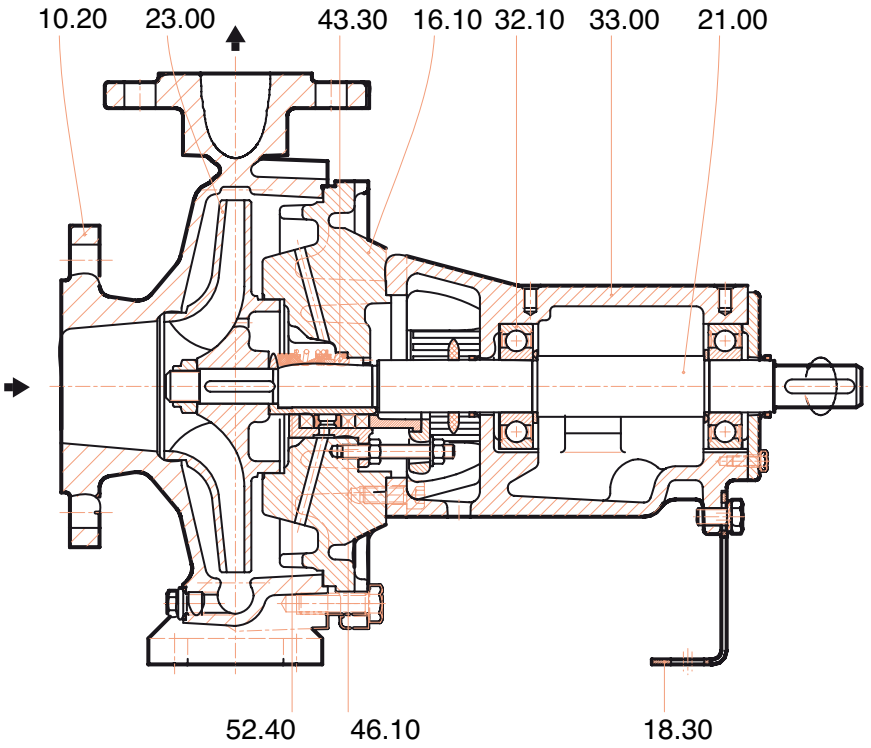

Bearing size 25, 35, 45

10.20 Spiral
16.10 Spiral base
18.30 Supporting foot
21.00 Shaft
23.00 Sheel
32.10 Bearing
33.00 Bearing housing
43.30 Mechanical seal
46.10 Cable gland box
52.40 Shaft sleeve (cable gland)

NOS

HYDRAULIC PRESELECTION GUIDE

• 4 pole

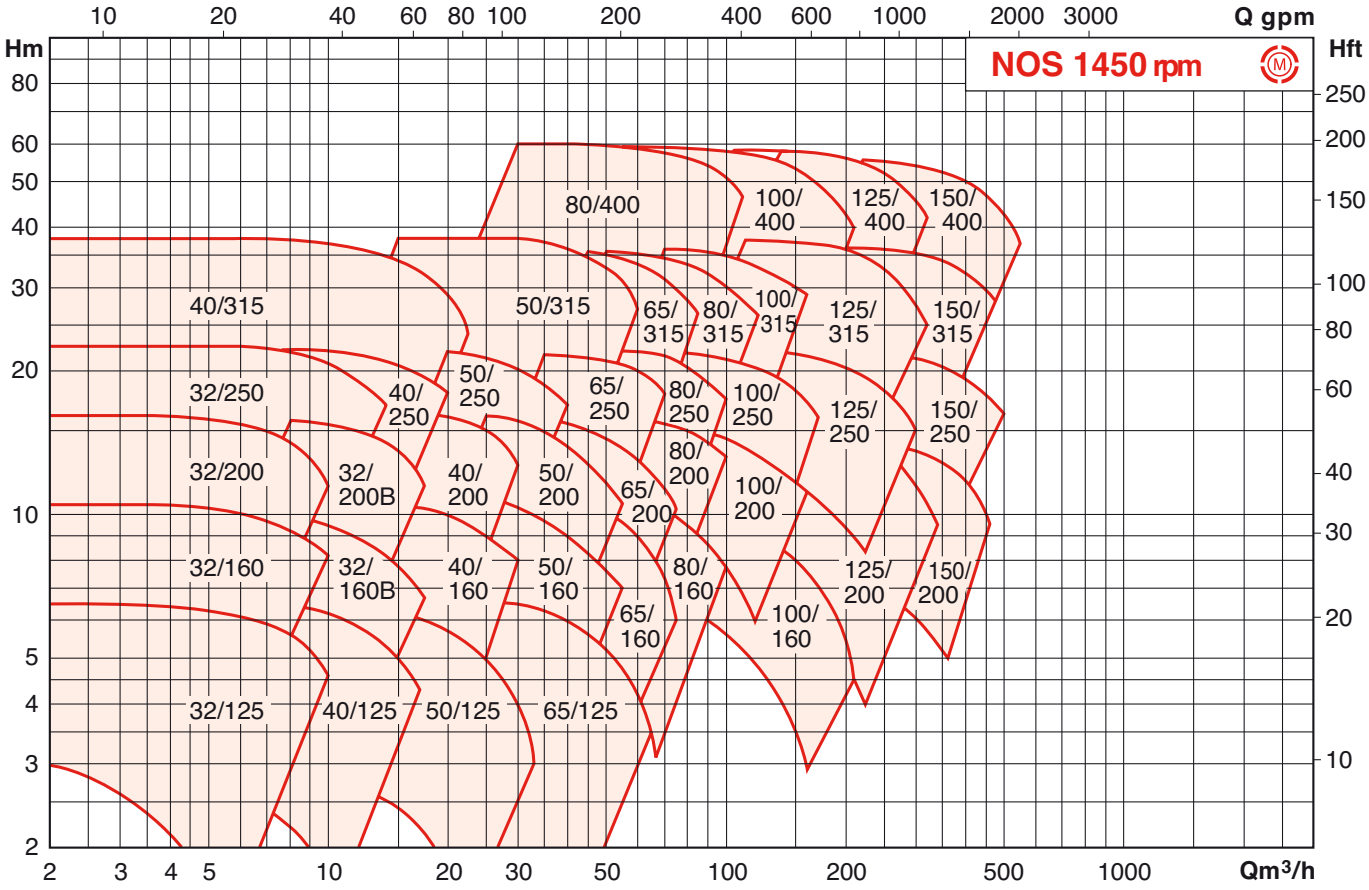

4 pole
32/125
32/160A
32/160B
32/200A
32/200B
32/250
40/125
40/160
40/200
40/250
40/315
50/125
50/160
50/200
50/250

4 pole
50/315
65/125
65/160
65/200
65/250
65/315
80/160
80/200
80/250
80/315
80/400
100/160
100/200
100/250
100/315

4 pole
100/400
125/200
125/250
125/315
125/400
150/200
150/250
150/315
150/400

HYDRAULIC PRESELECTION GUIDE

• 2 pole

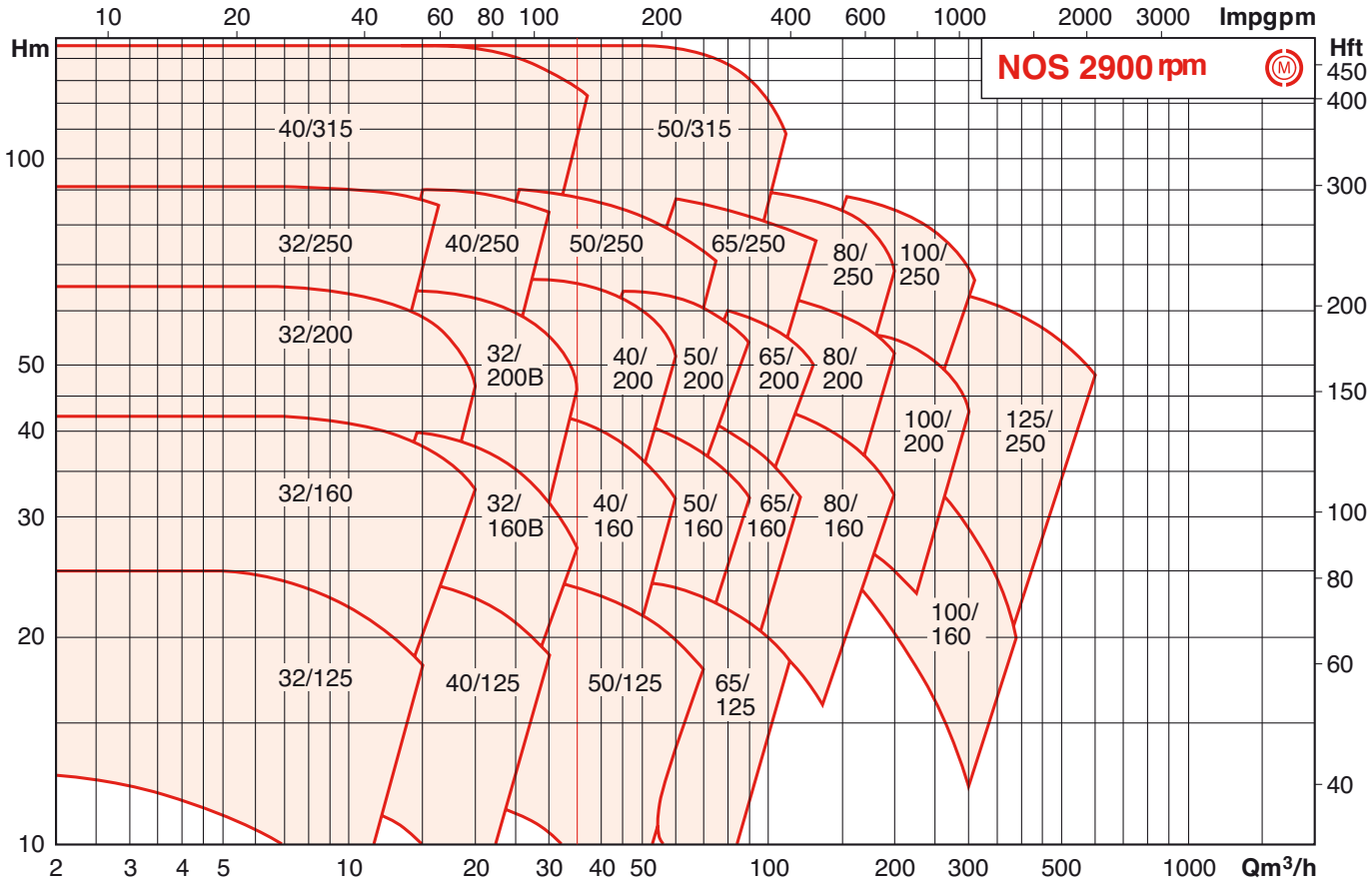

2 pole
32/125
32/160A
32/160B
32/200A
32/200B
32/250
40/125
40/160
40/200
40/250
40/315
50/125
50/160
50/200
50/250

2 pole
50/315
65/125
65/160
65/200
65/250
80/160
80/200
80/250
100/160
100/200
100/250
125/200

NOS

HYDRAULIC PERFORMANCES 1450 REV/MIN

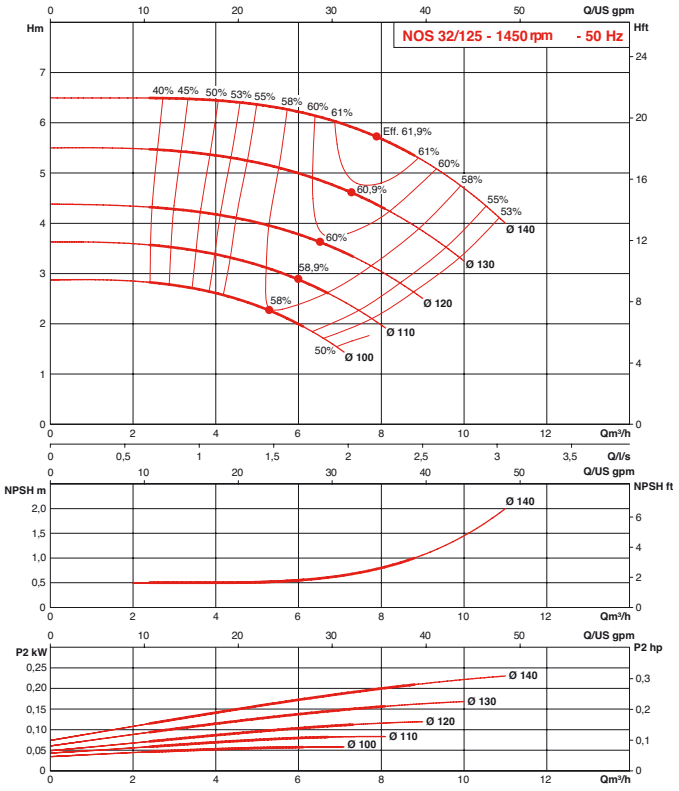

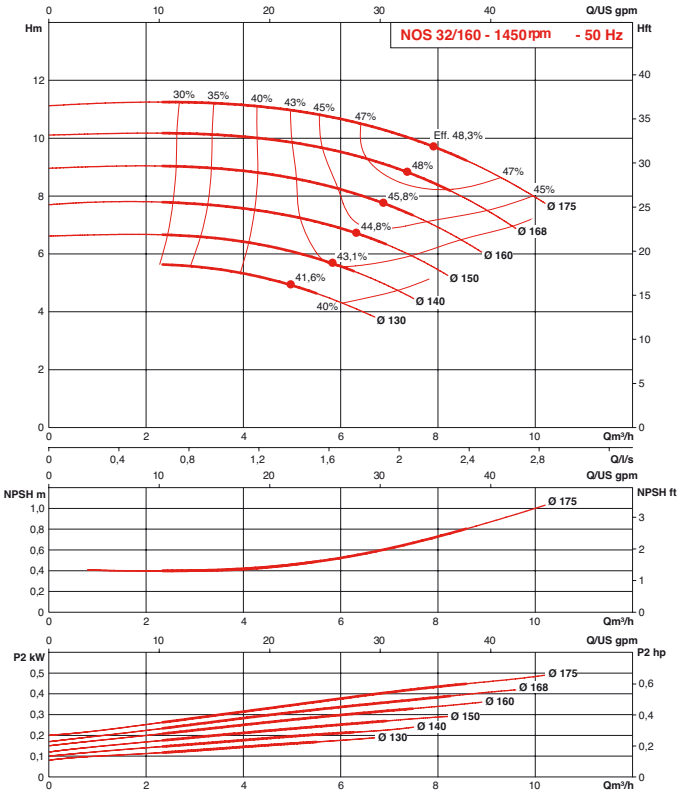

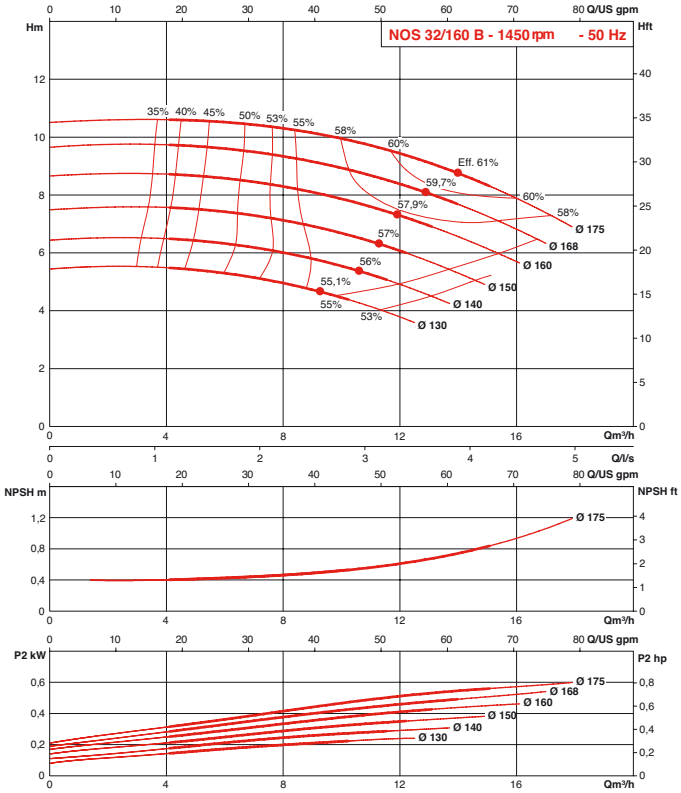

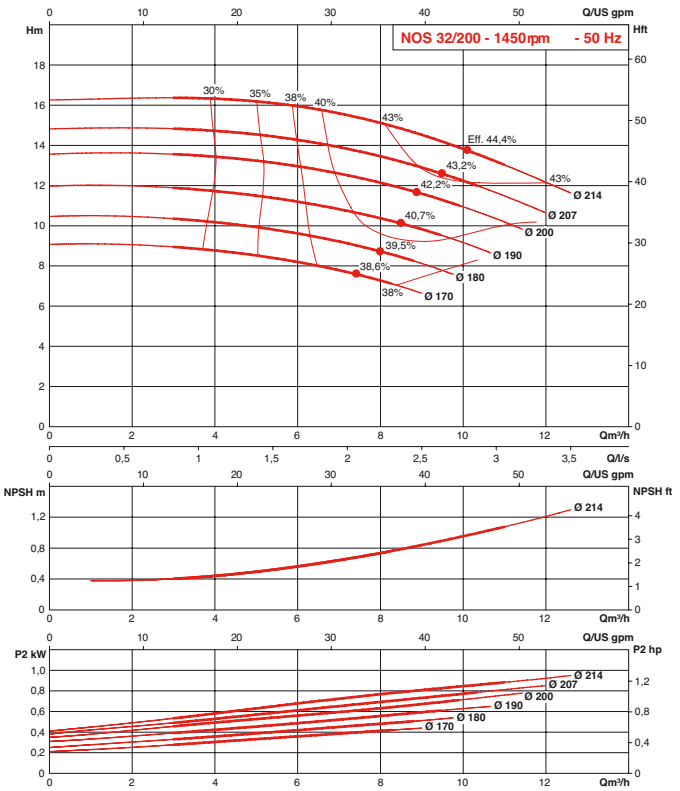

HYDRAULIC PERFORMANCES 1450 REV/MIN

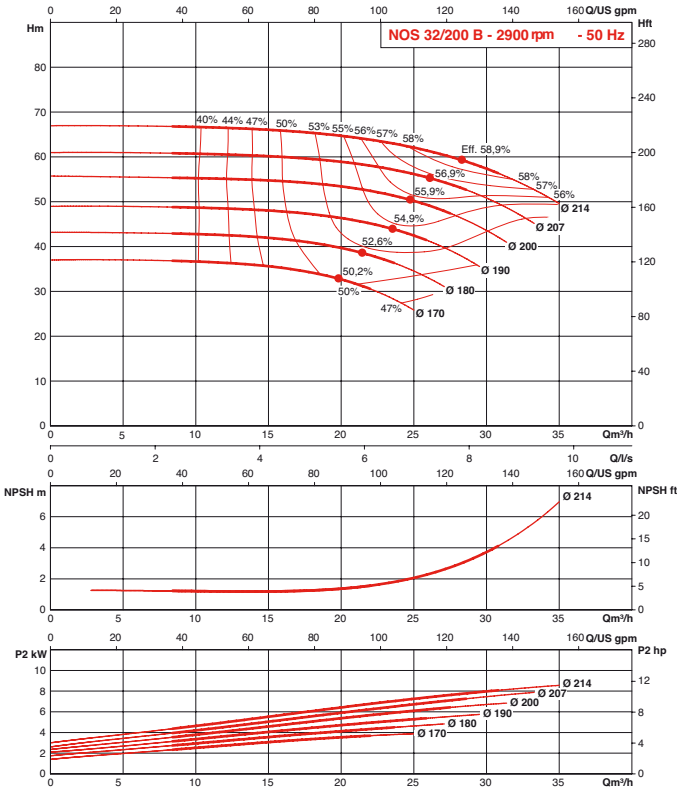

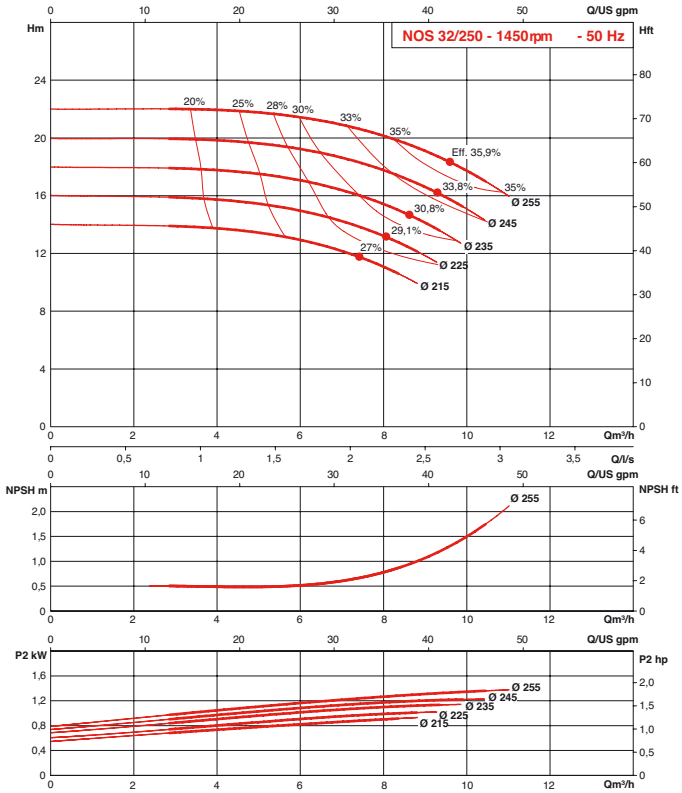

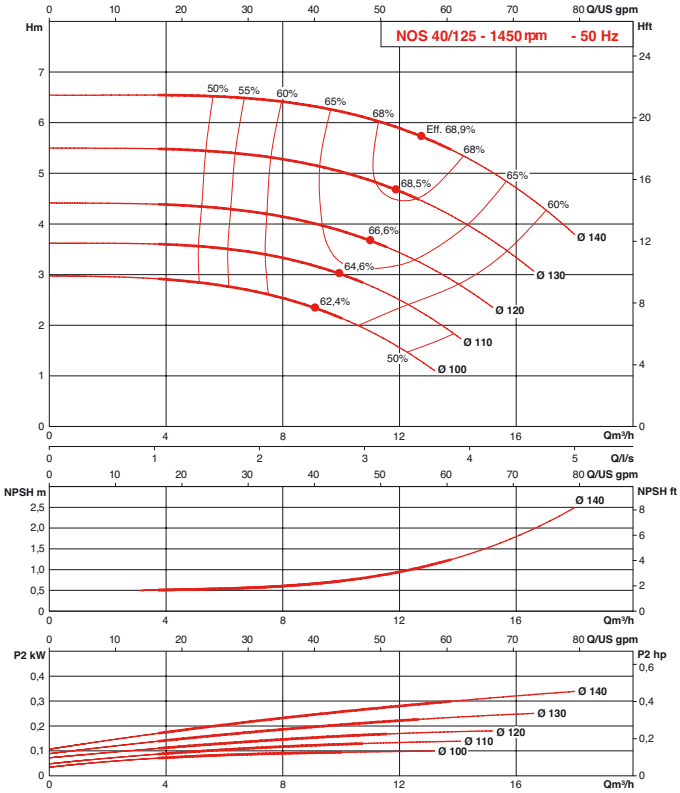

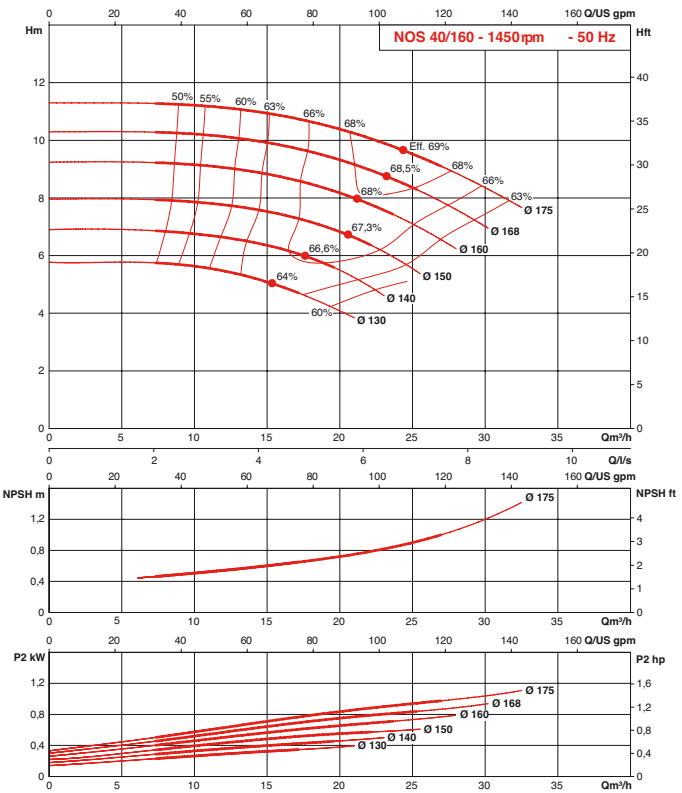

NOS

HYDRAULIC PERFORMANCES 1450 REV/MIN

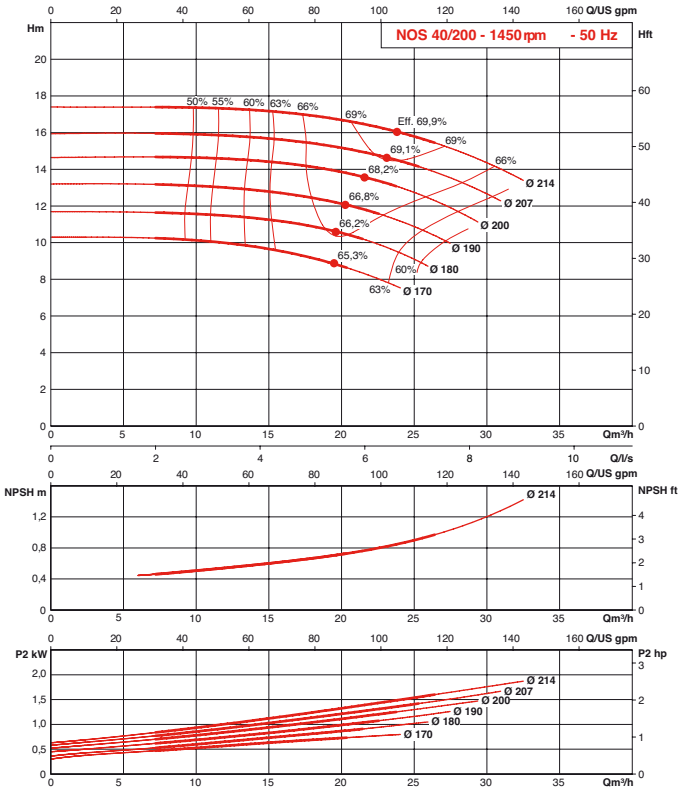

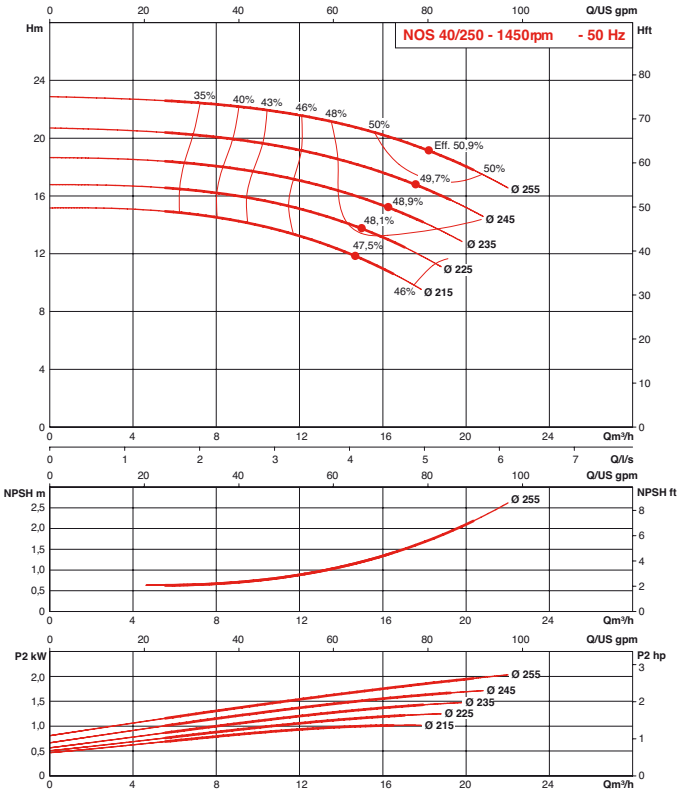

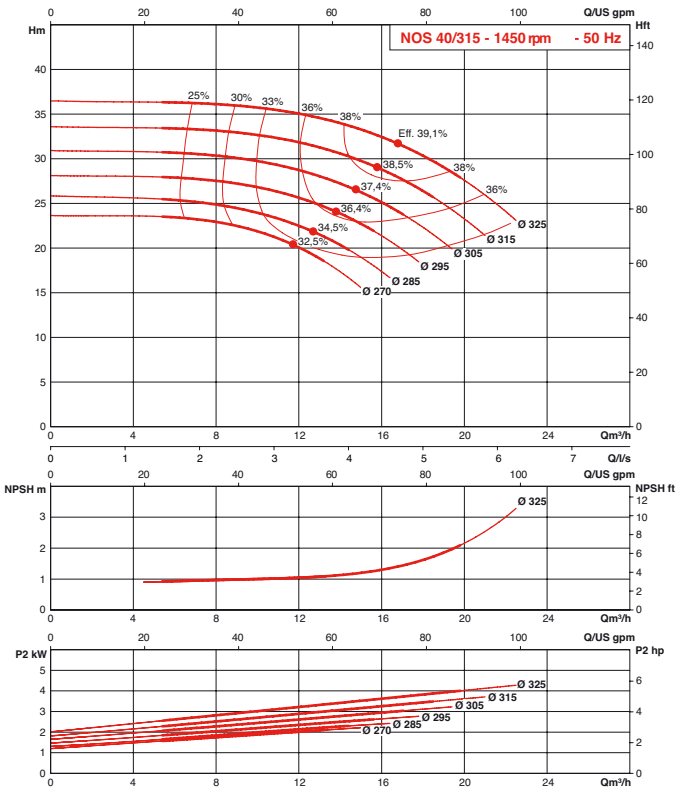

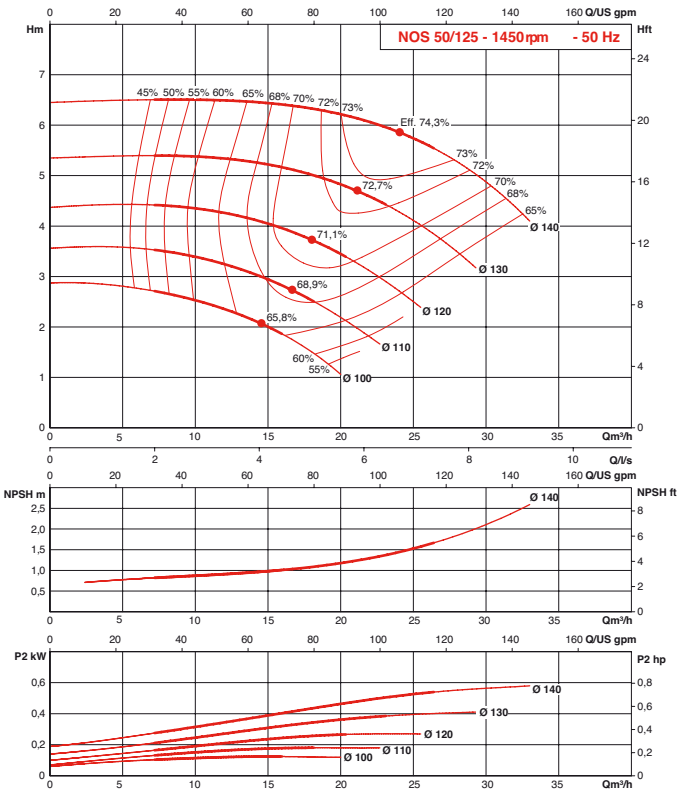

HYDRAULIC PERFORMANCES 1450 REV/MIN

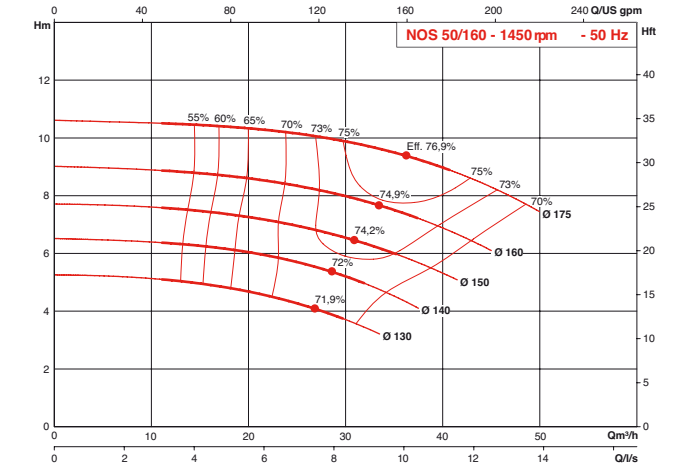

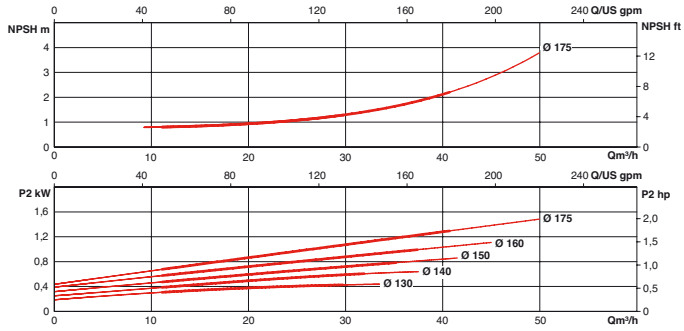

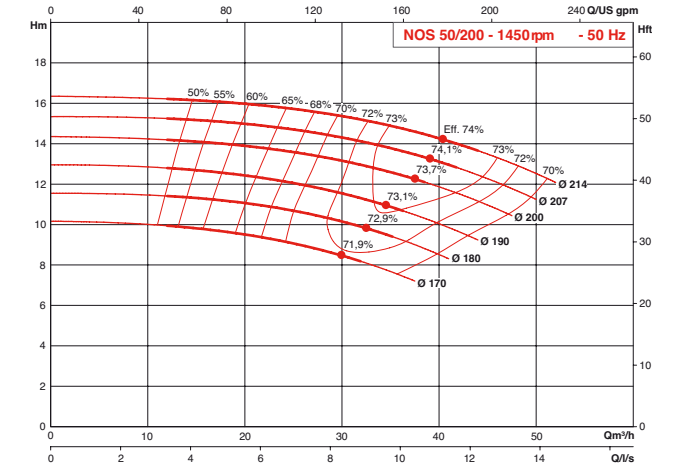

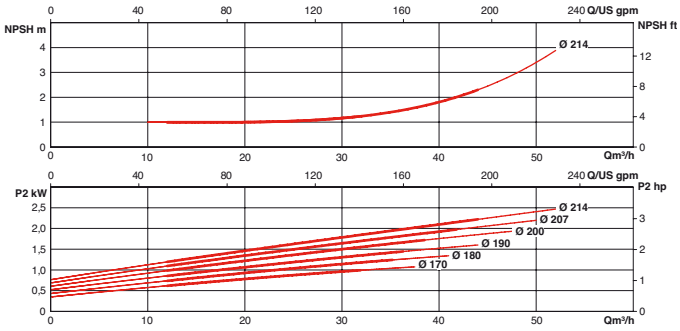

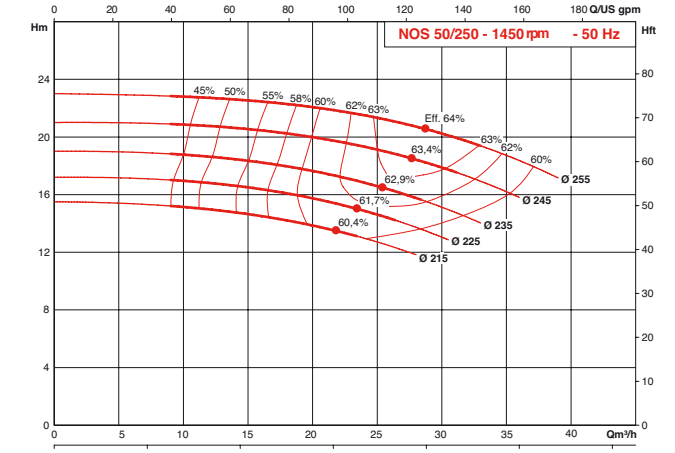

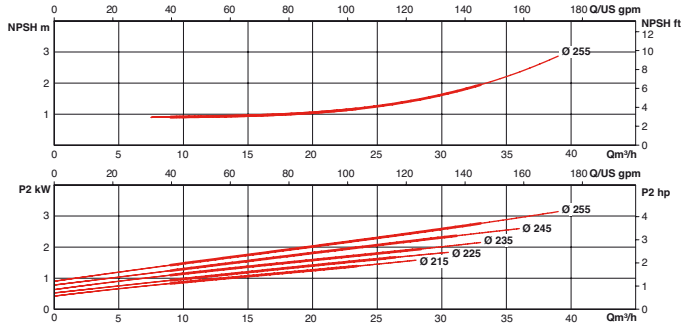

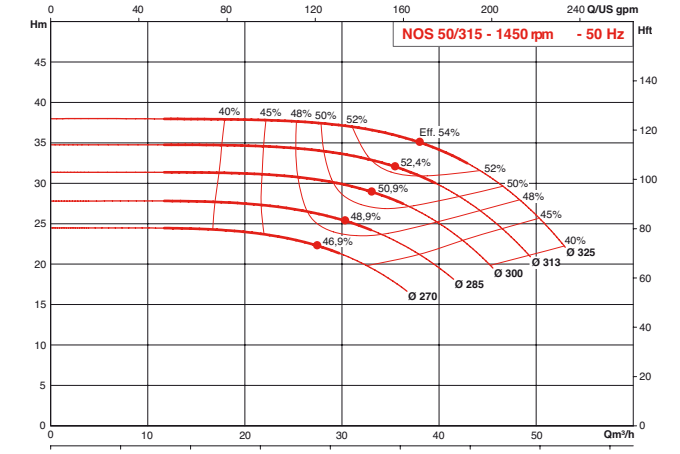

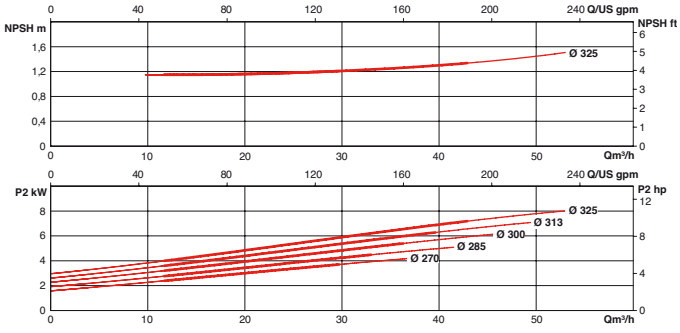

NOS

HYDRAULIC PERFORMANCES 1450 REV/MIN

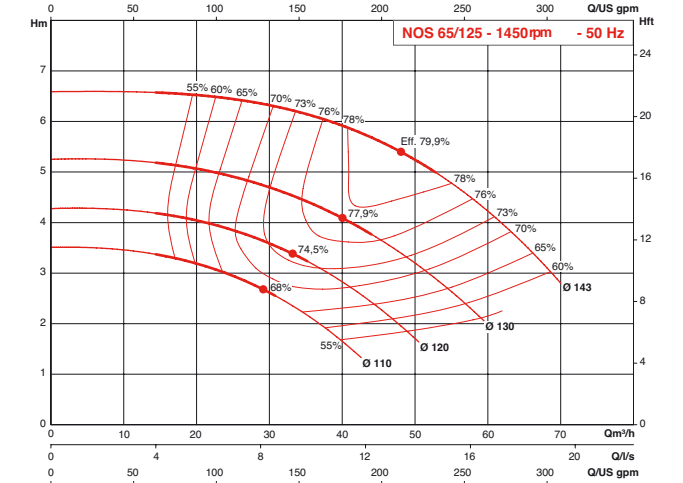

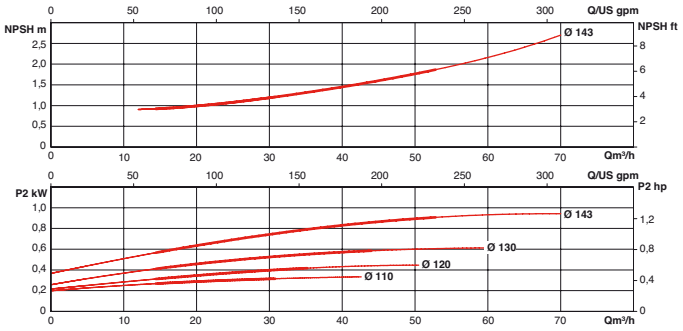

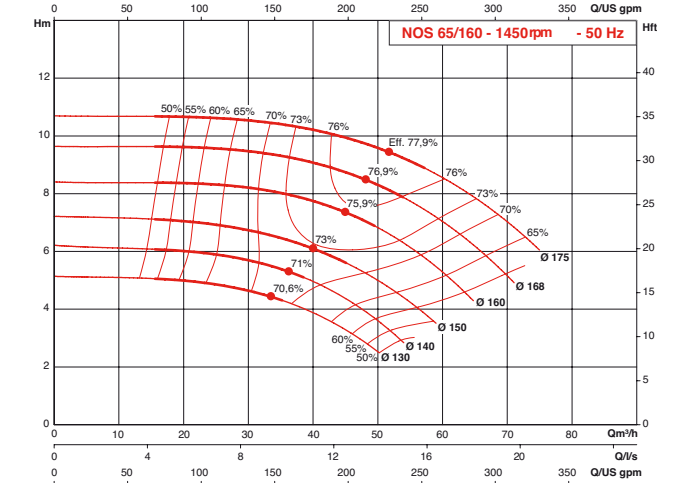

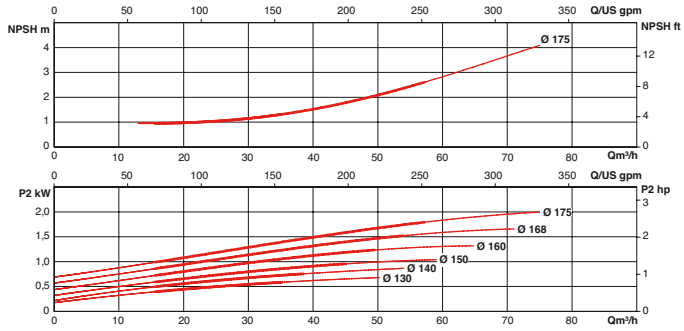

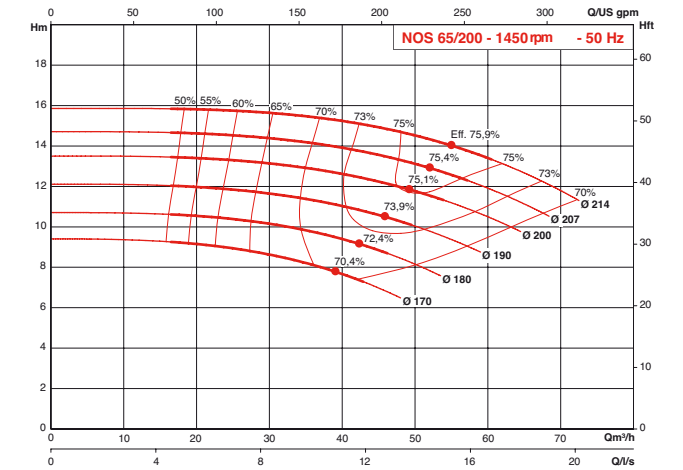

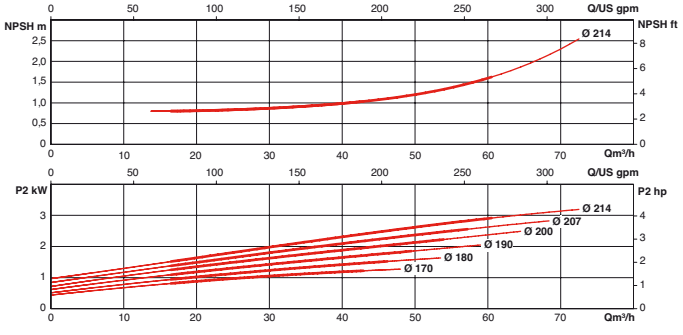

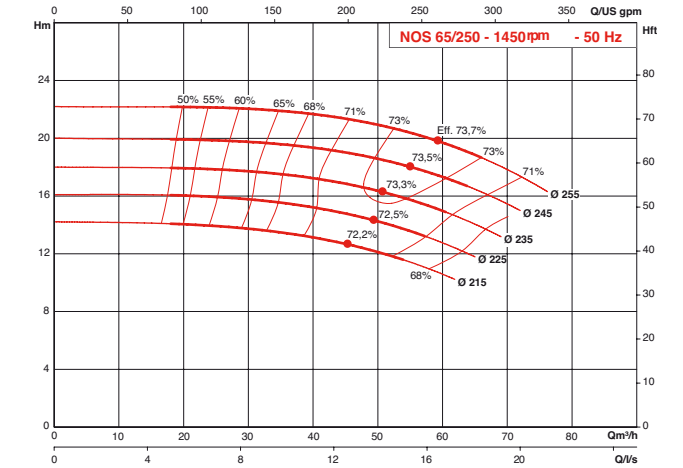

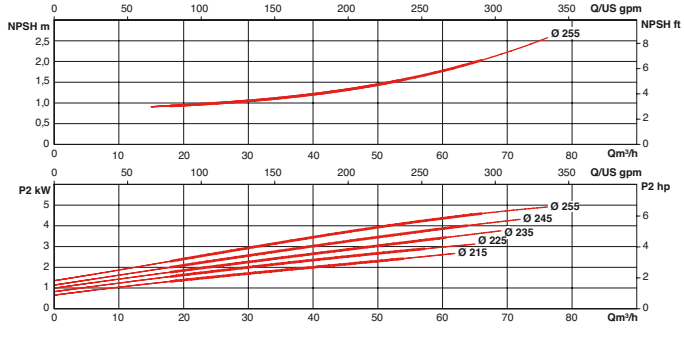

HYDRAULIC PERFORMANCES 1450 REV/MIN

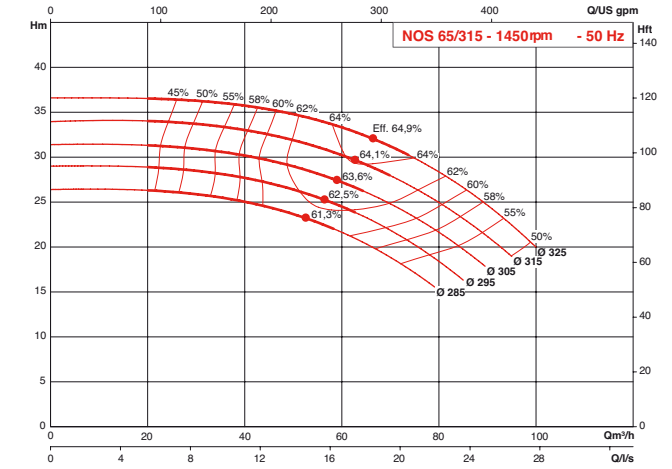

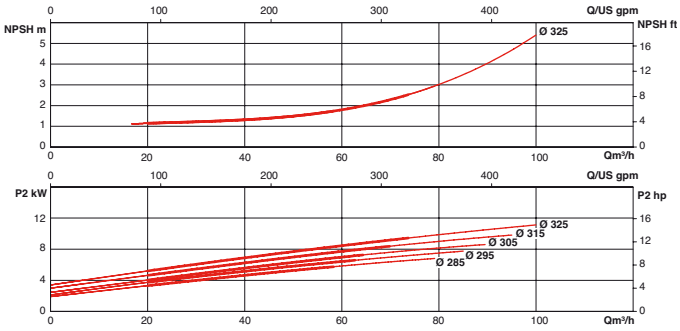

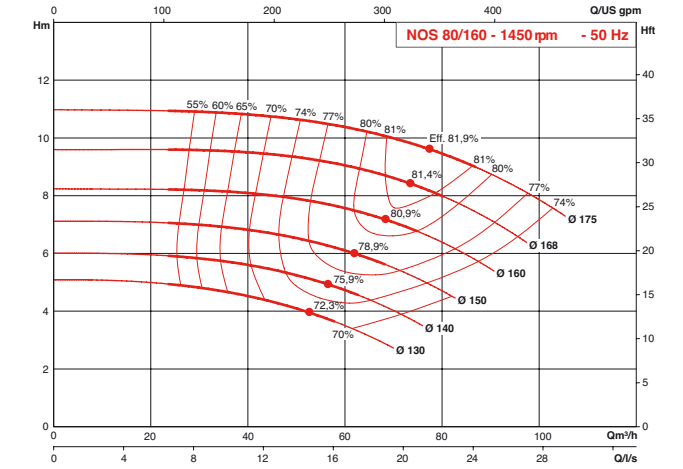

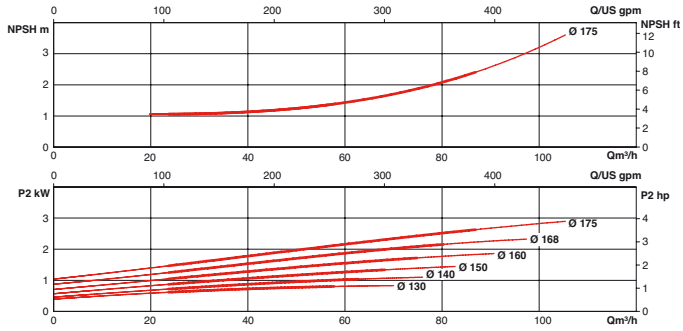

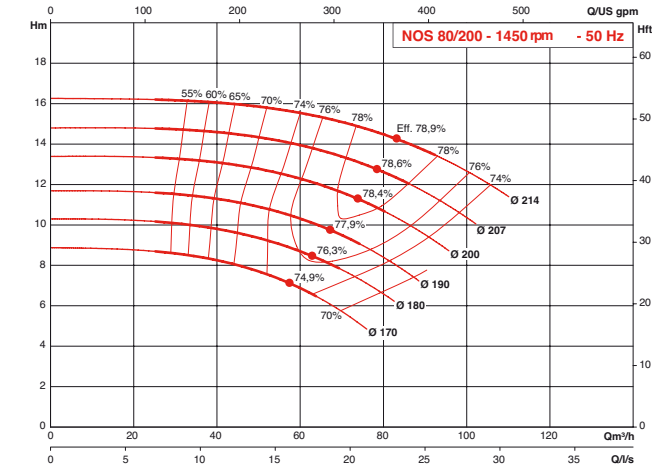

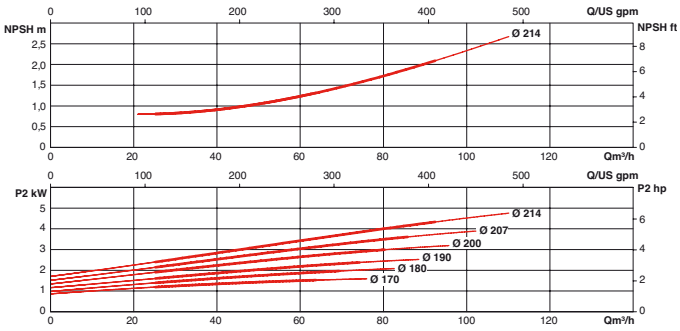

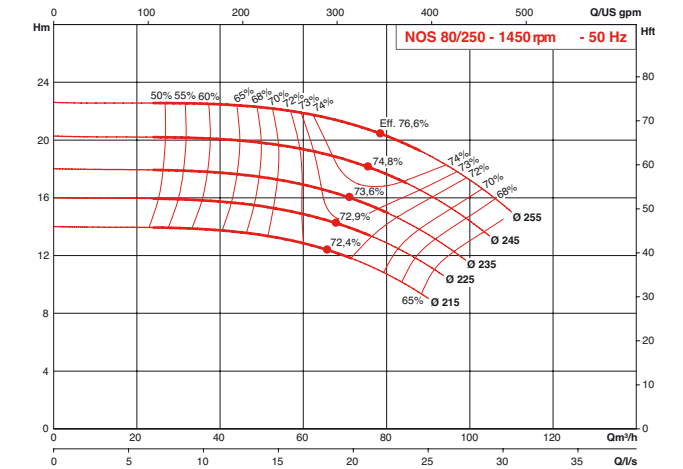

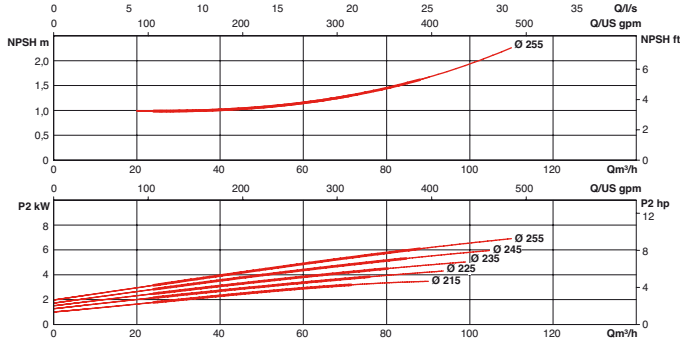

NOS

HYDRAULIC PERFORMANCES 1450 REV/MIN

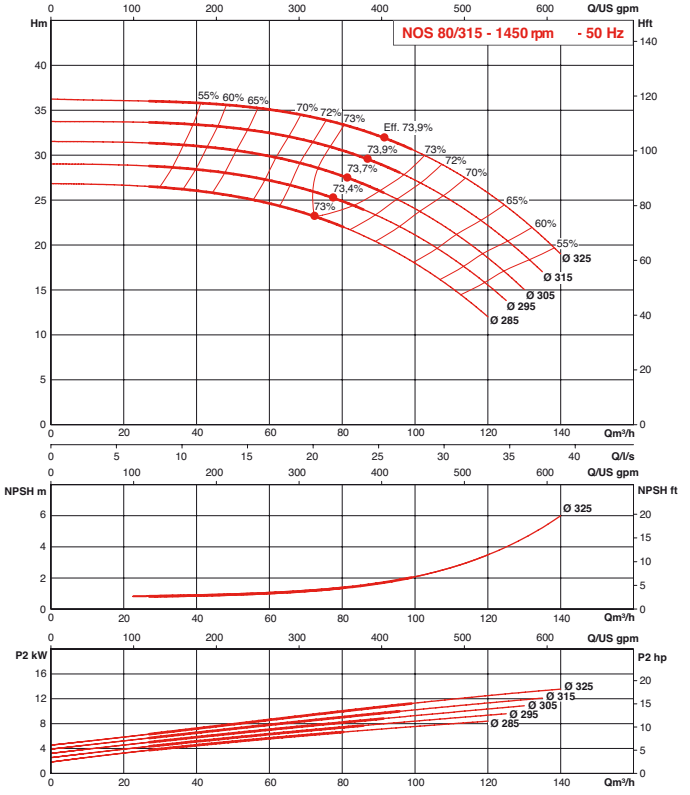

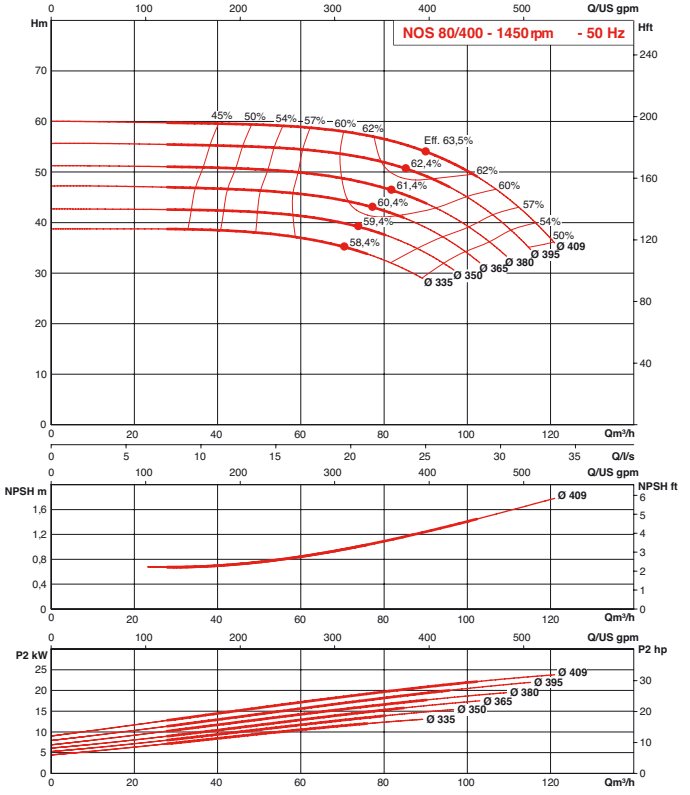

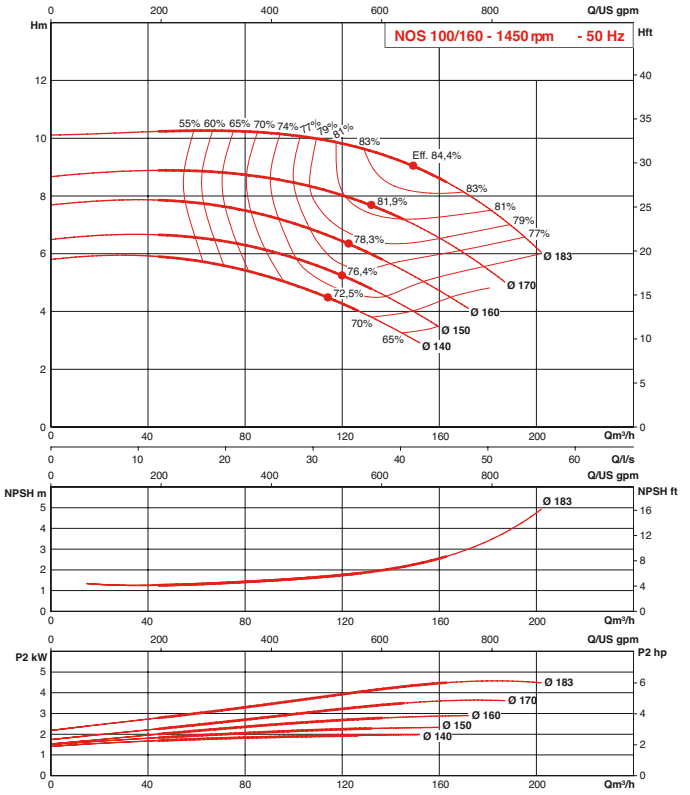

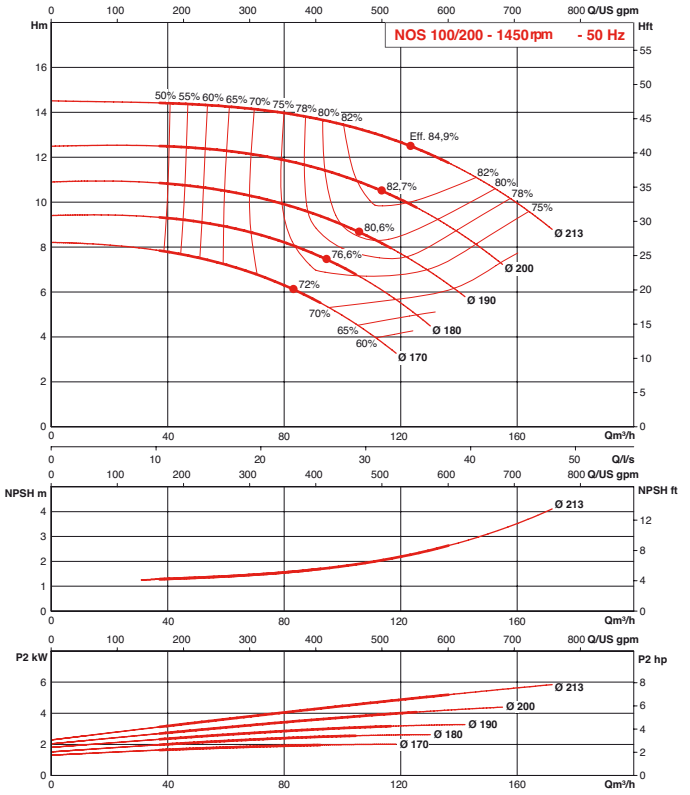

HYDRAULIC PERFORMANCES 1450 REV/MIN

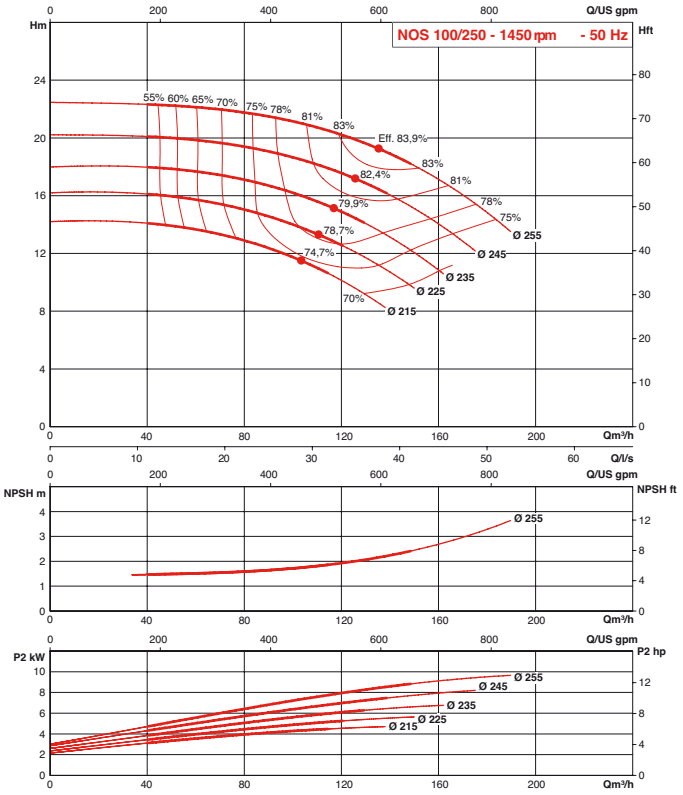

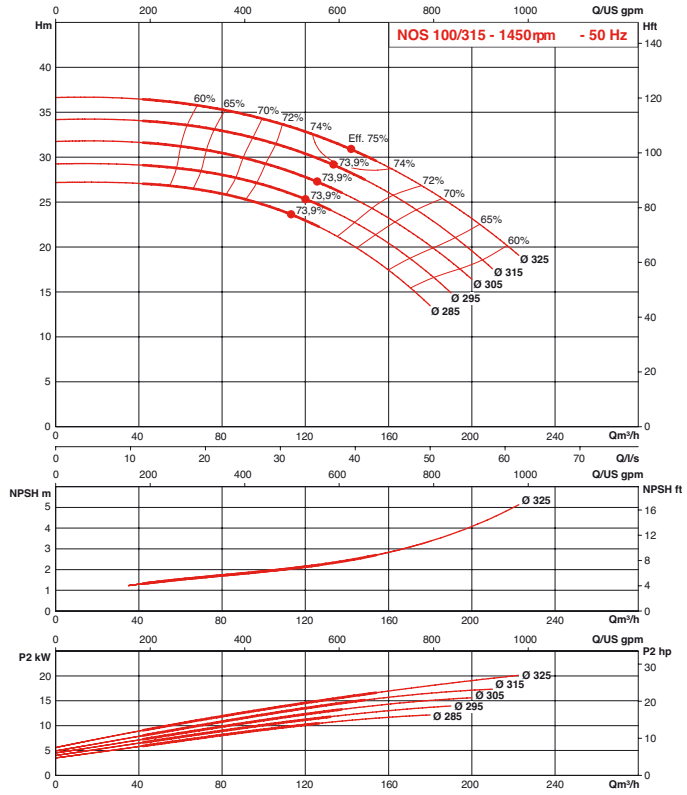

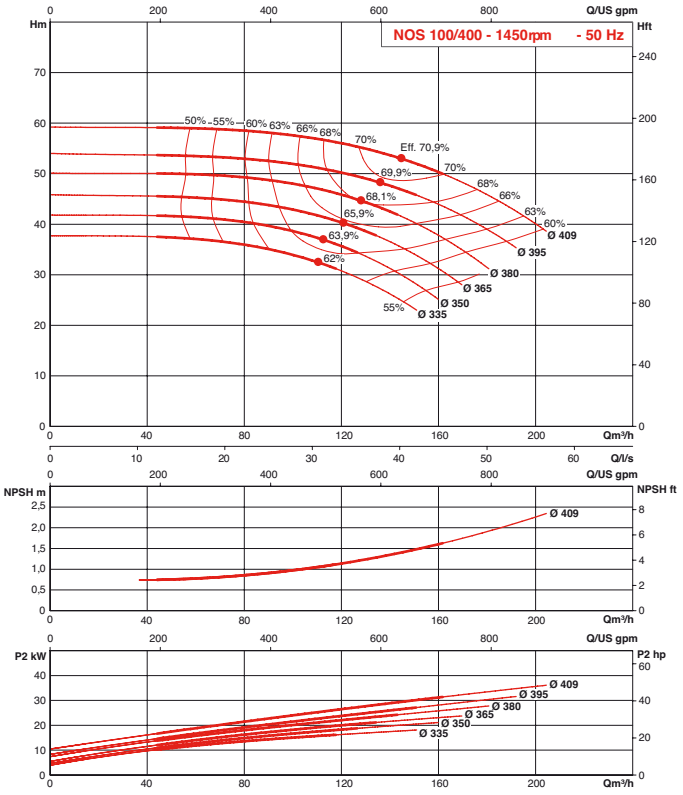

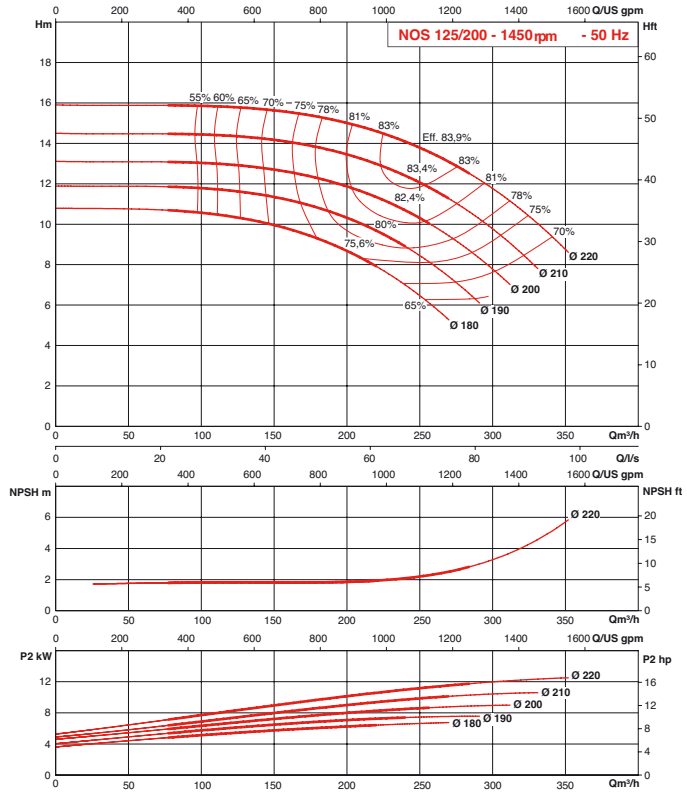

NOS

HYDRAULIC PERFORMANCES 1450 REV/MIN

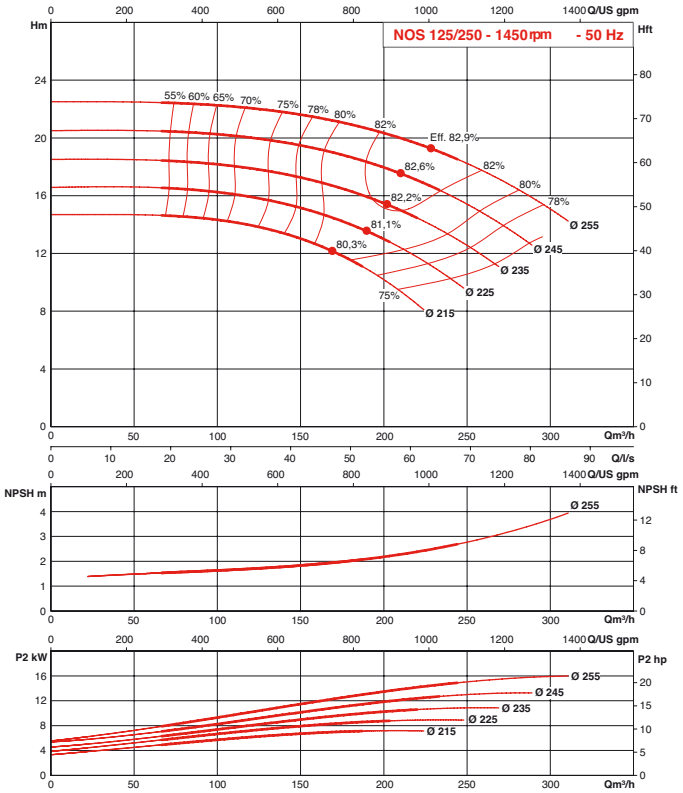

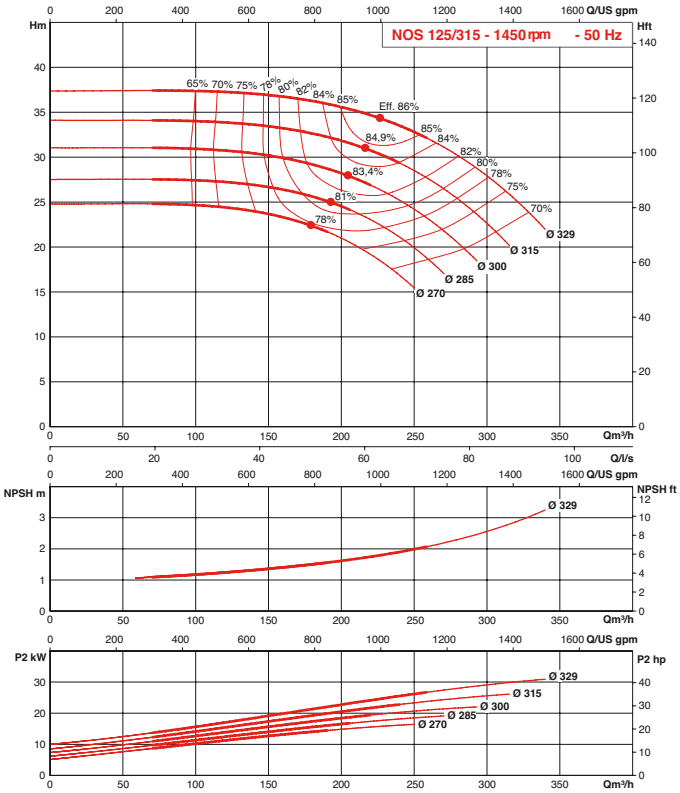

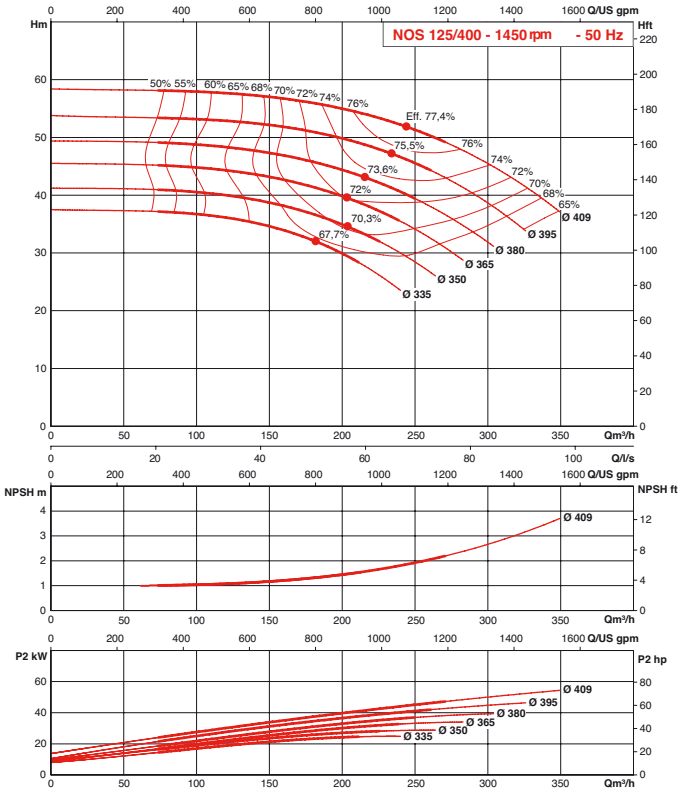

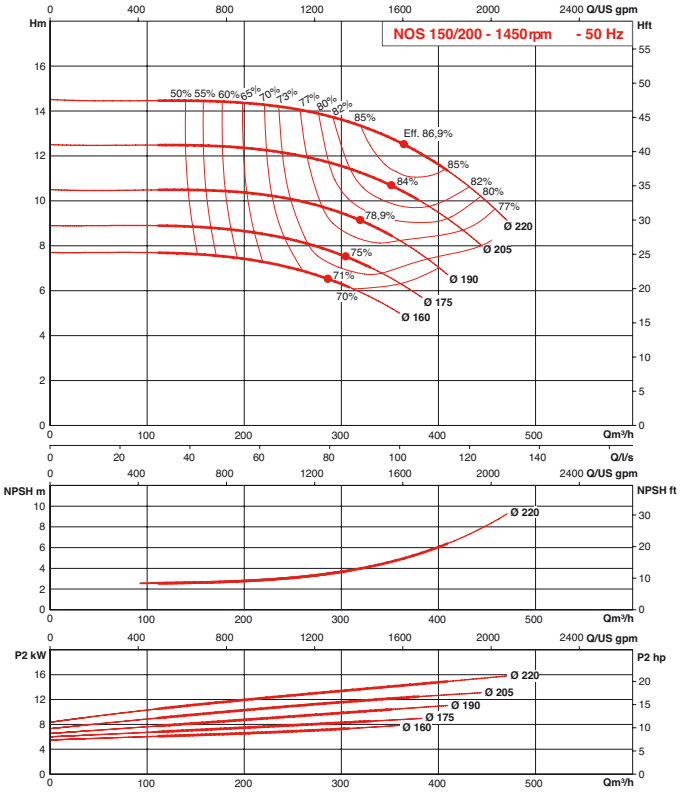

HYDRAULIC PERFORMANCES 1450 REV/MIN

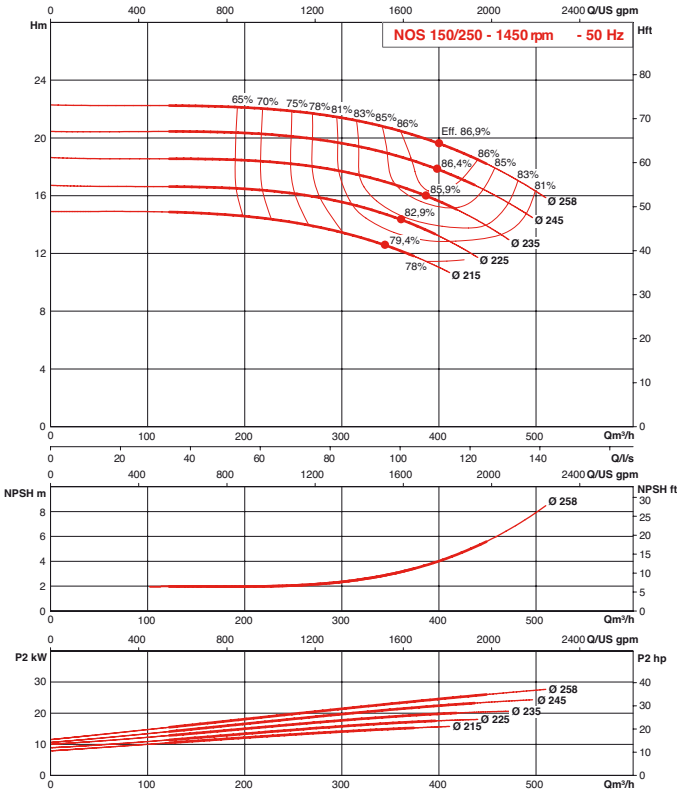

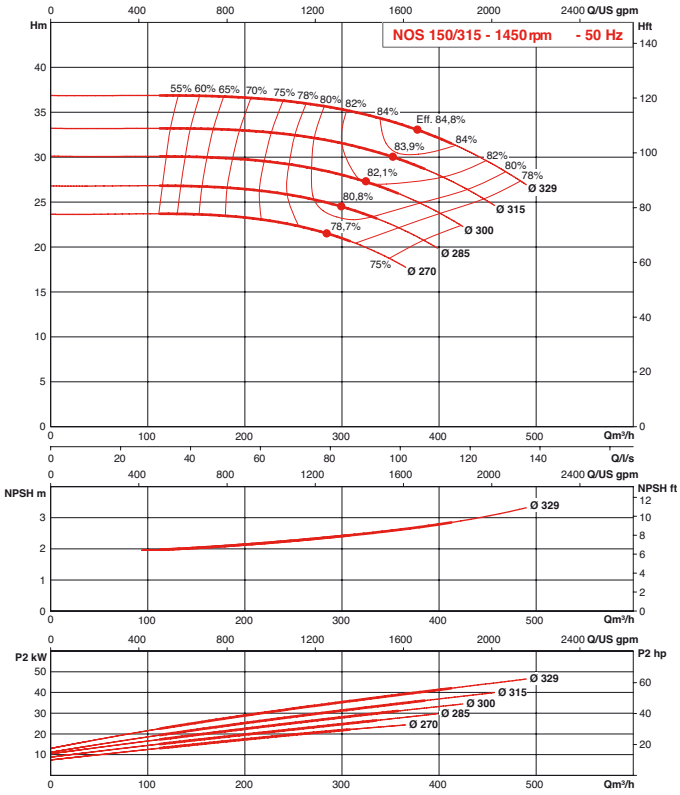

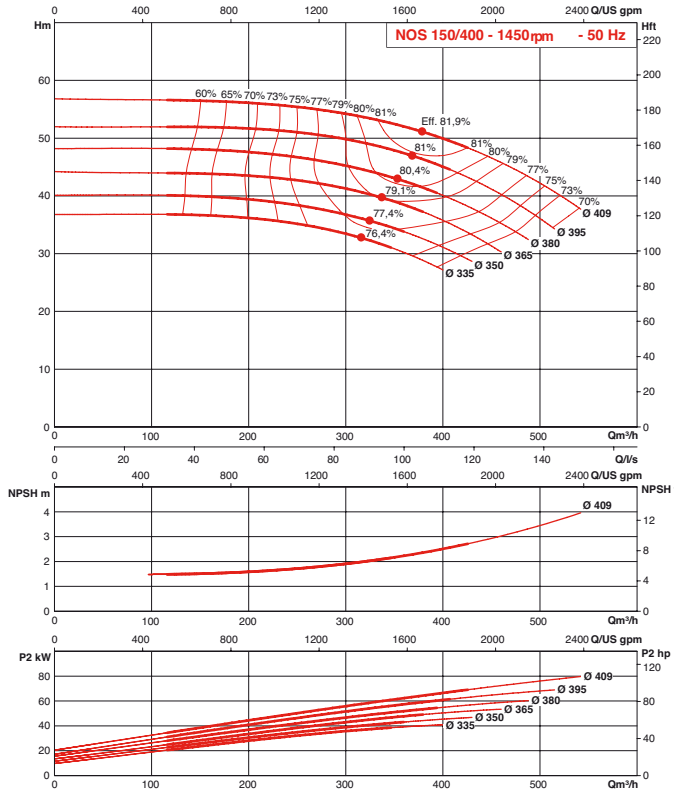

NOS

HYDRAULIC PERFORMANCES 2900 REV/MIN

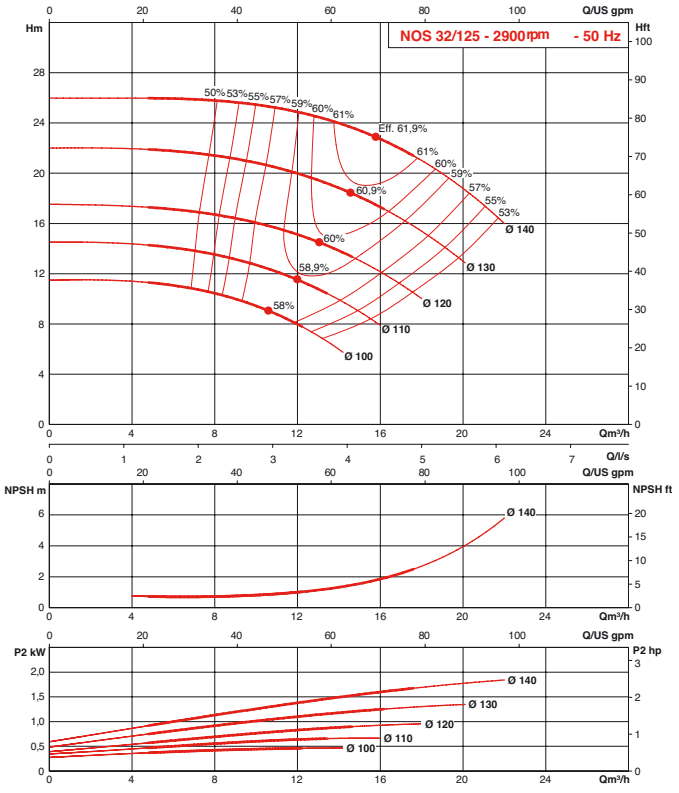

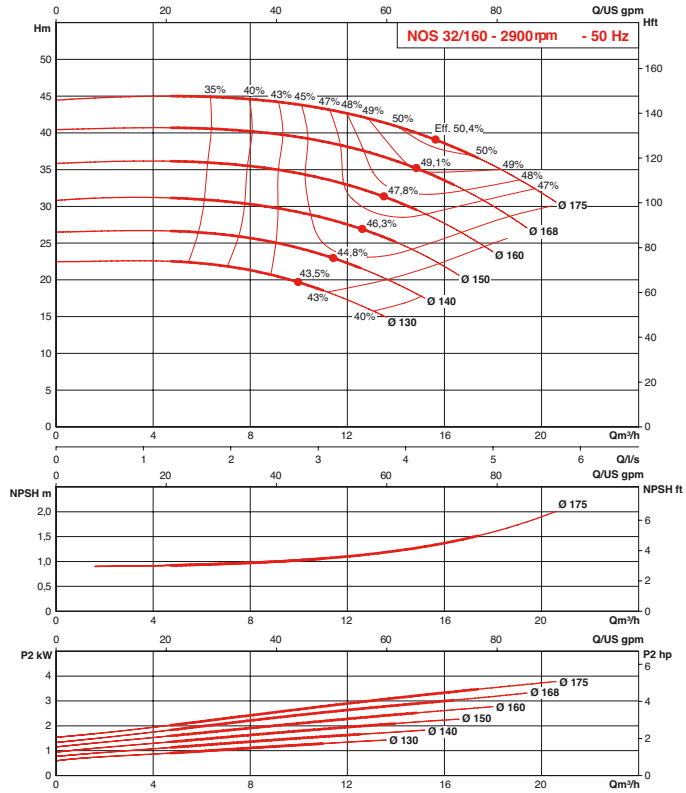

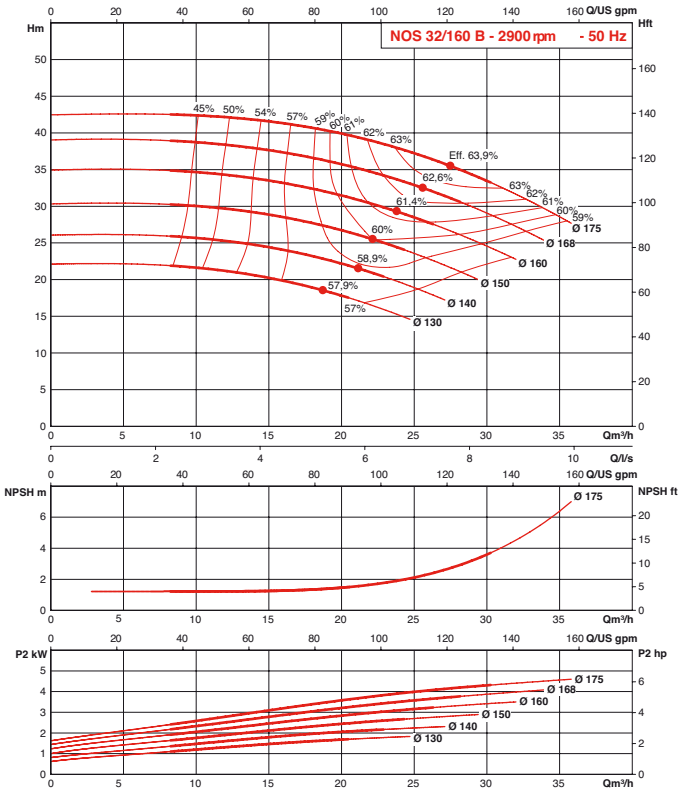

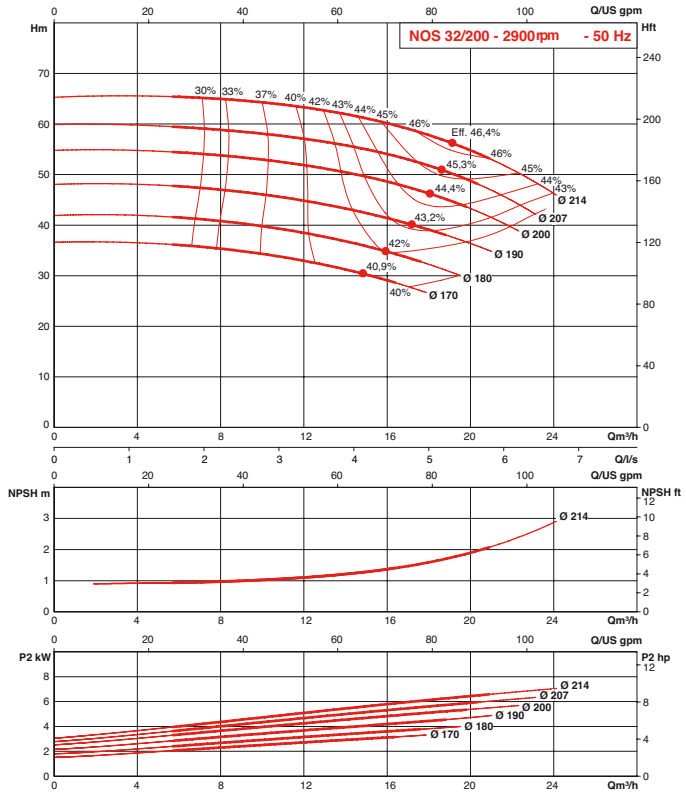

HYDRAULIC PERFORMANCES — 2900 REV/MIN

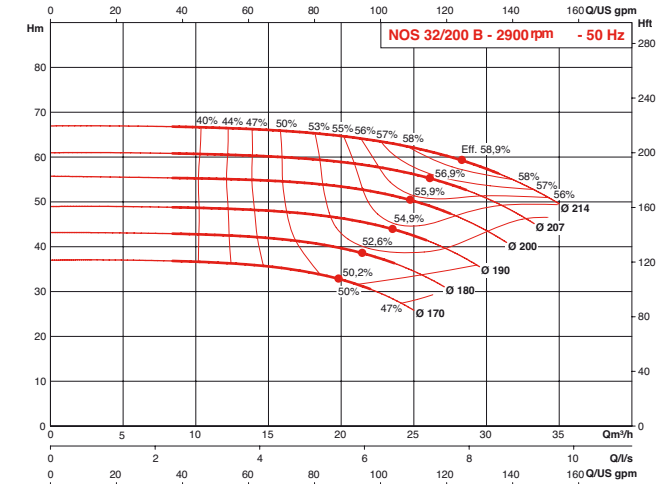

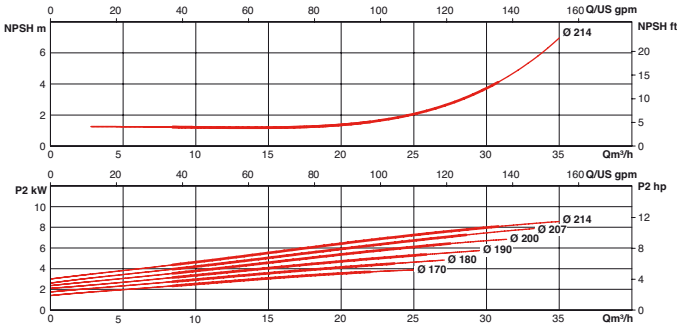

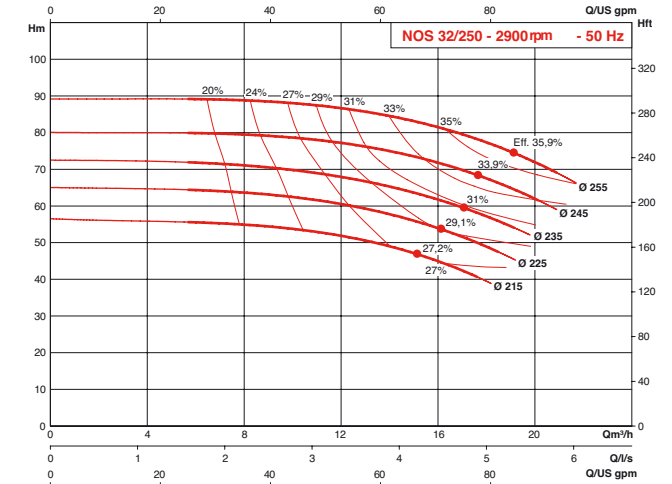

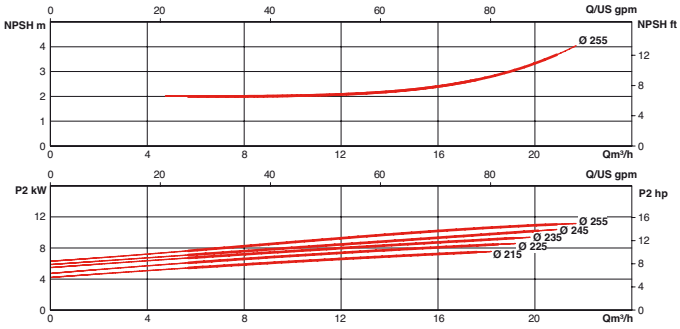

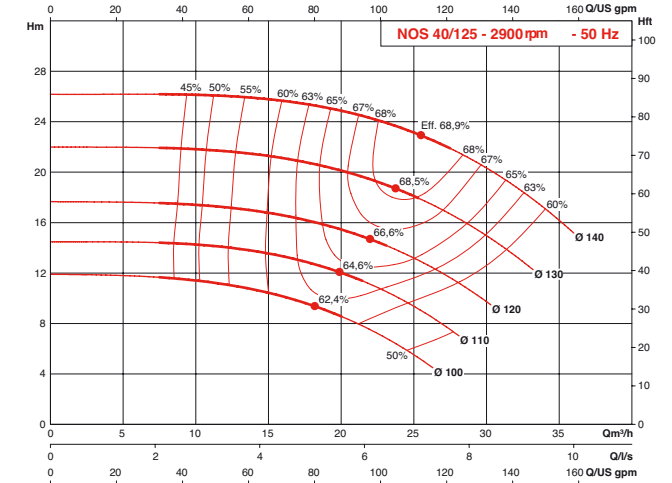

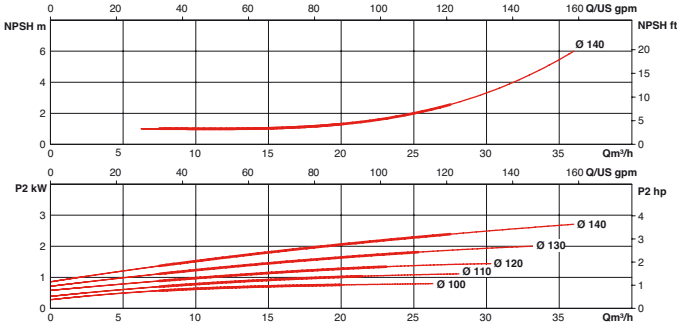

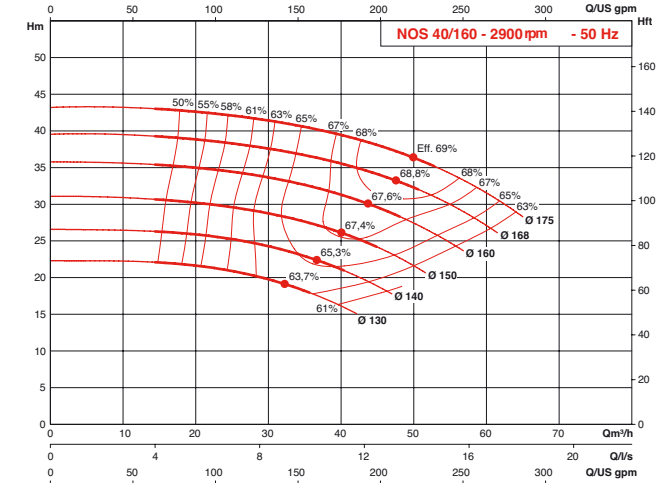

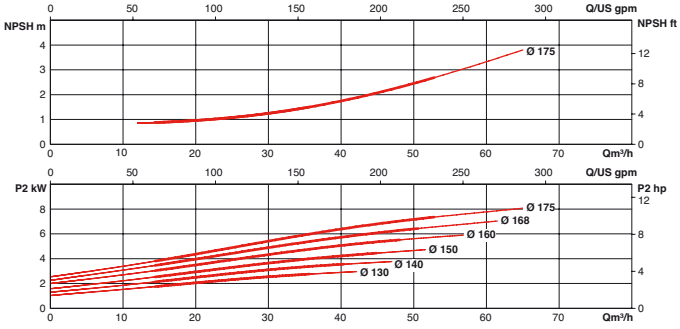

NOS

HYDRAULIC PERFORMANCES 2900 REV/MIN

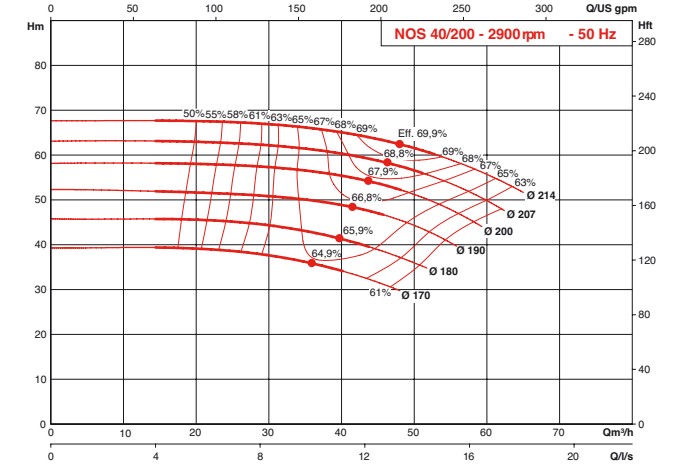

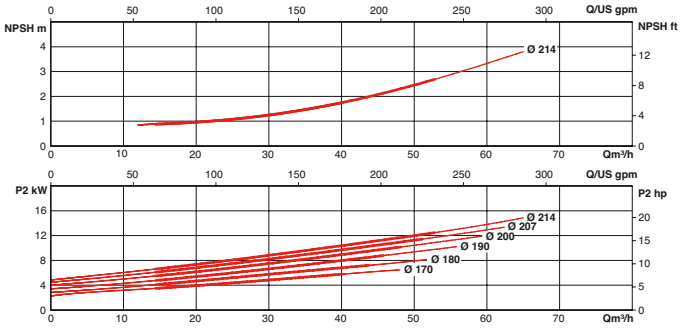

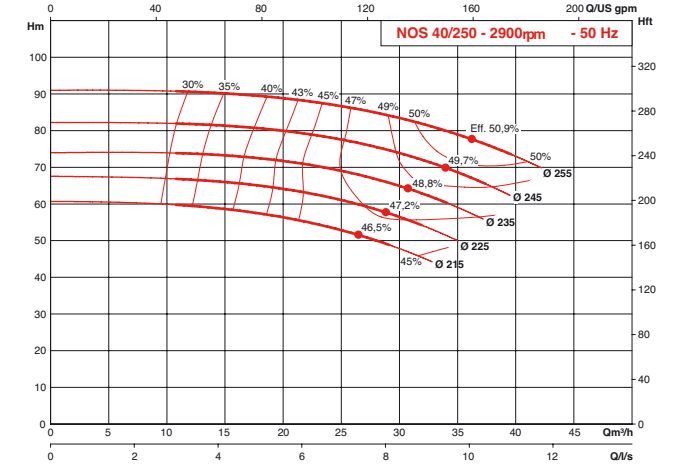

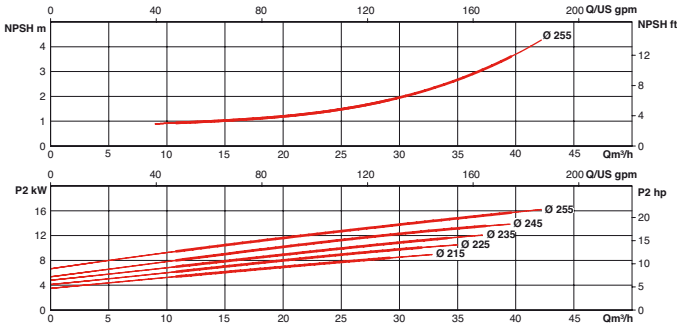

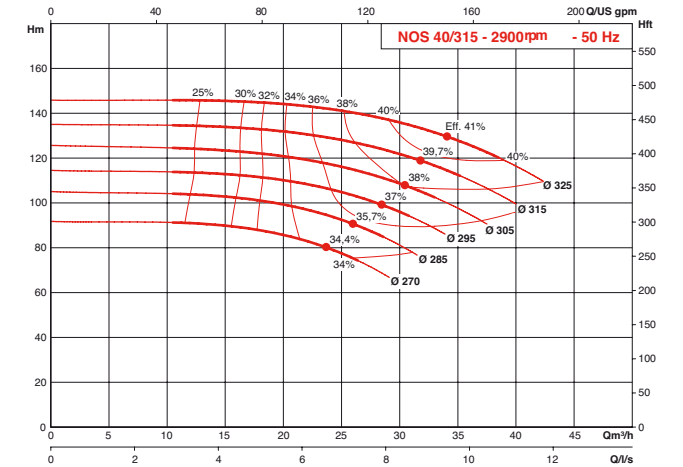

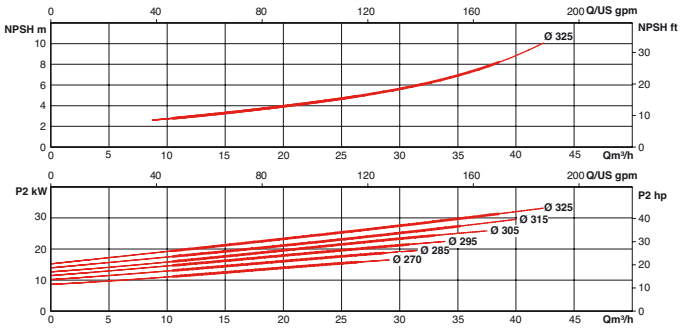

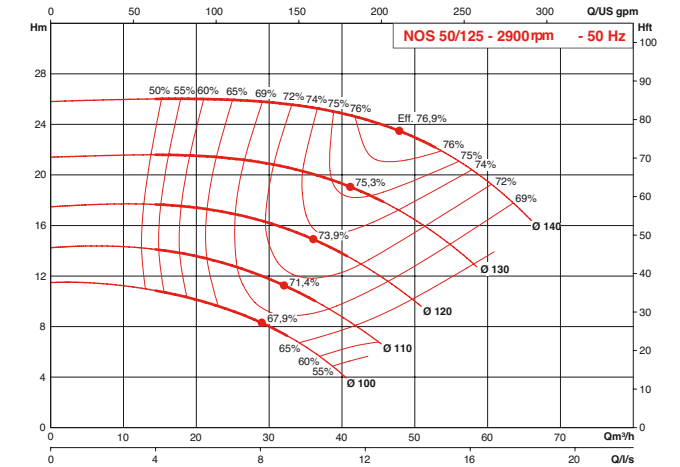

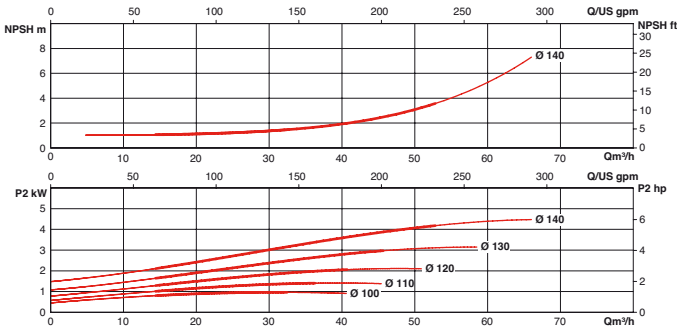

HYDRAULIC PERFORMANCES — 2900 REV/MIN

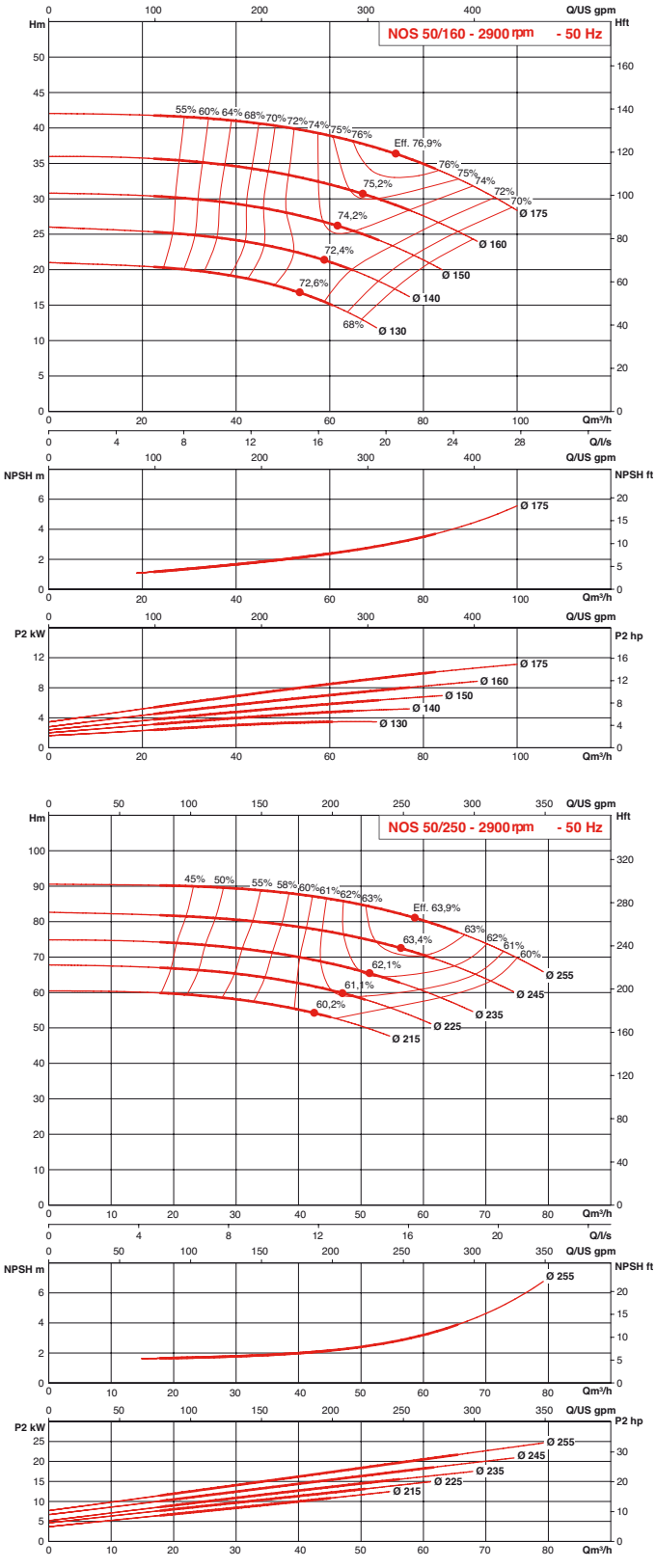

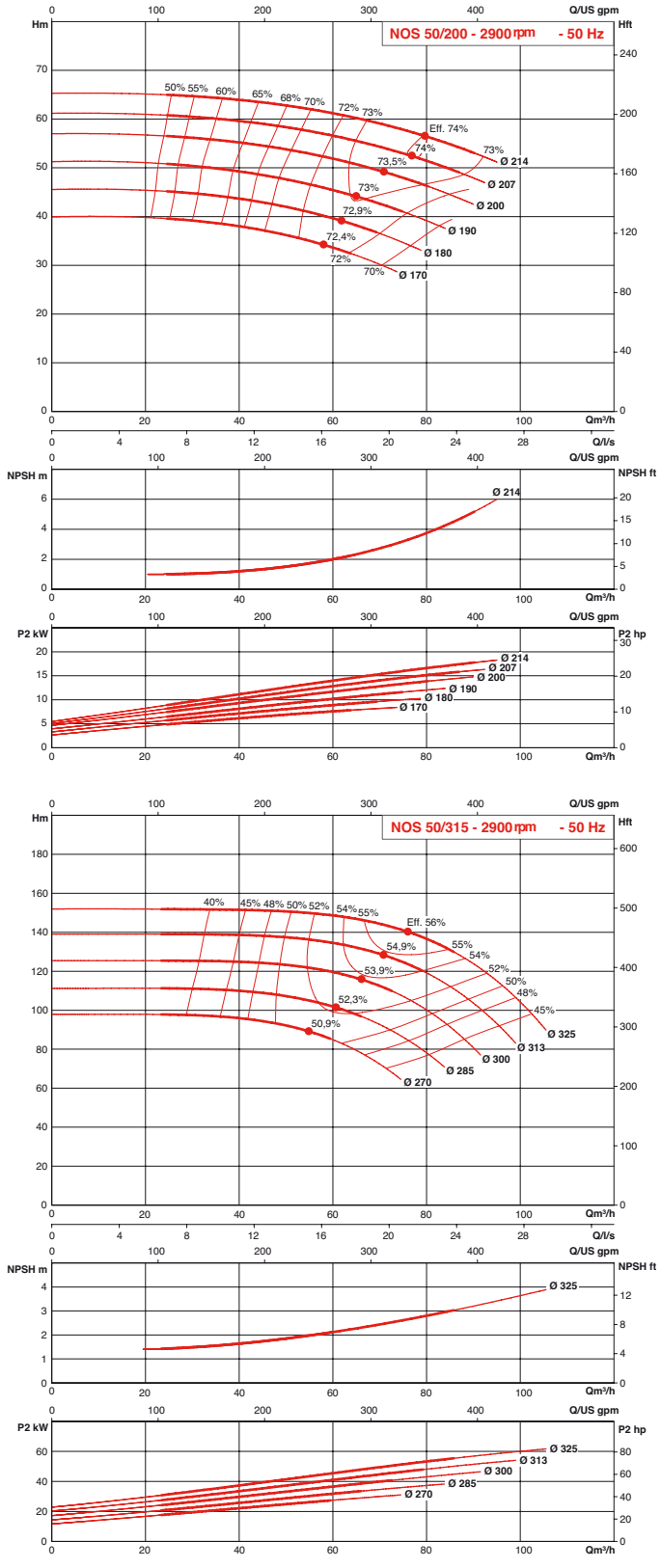

NOS

HYDRAULIC PERFORMANCES 2900 REV/MIN

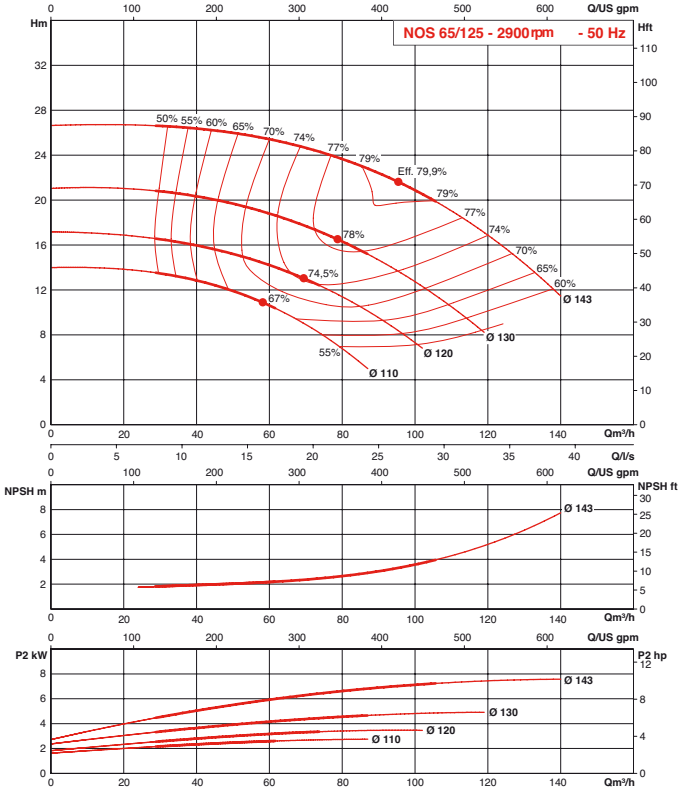

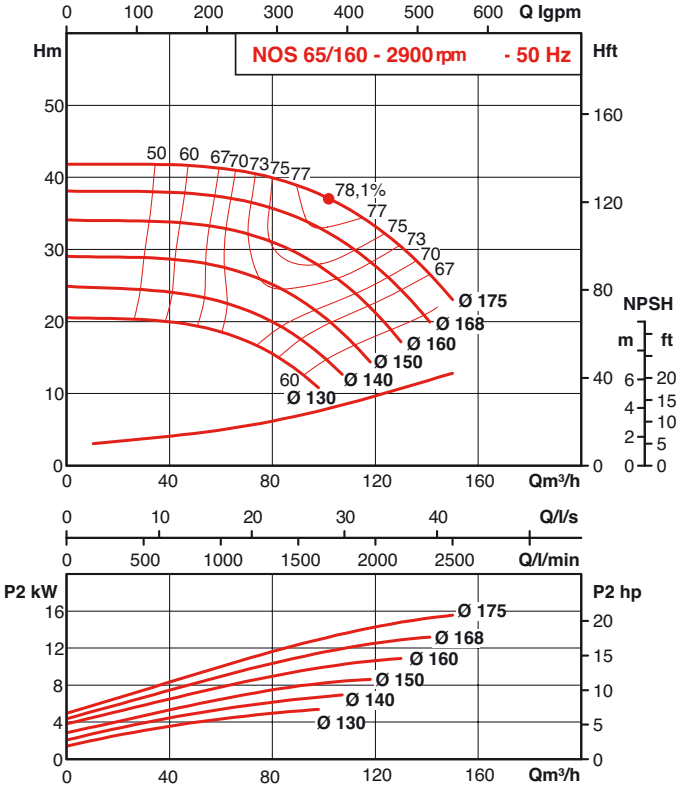

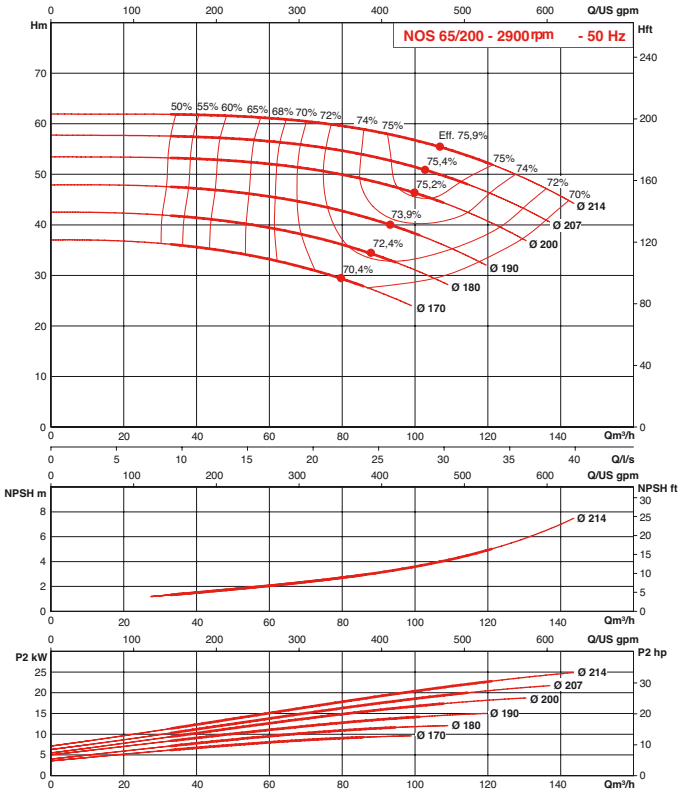

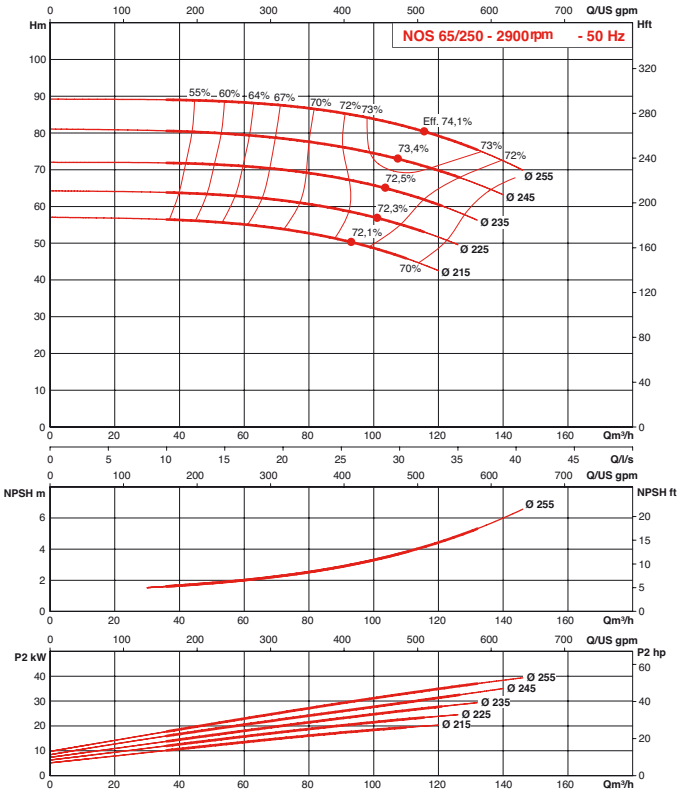

HYDRAULIC PERFORMANCES — 2900 REV/MIN

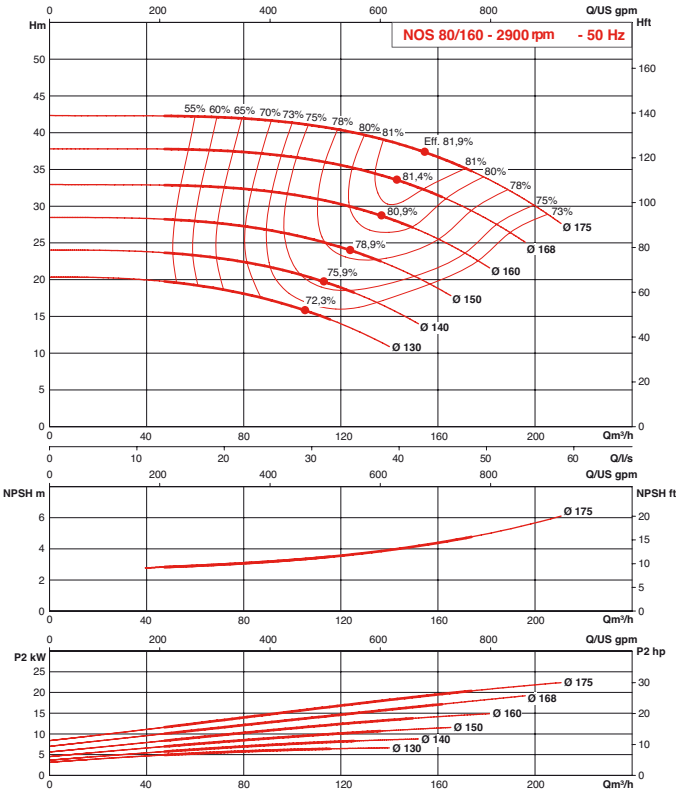

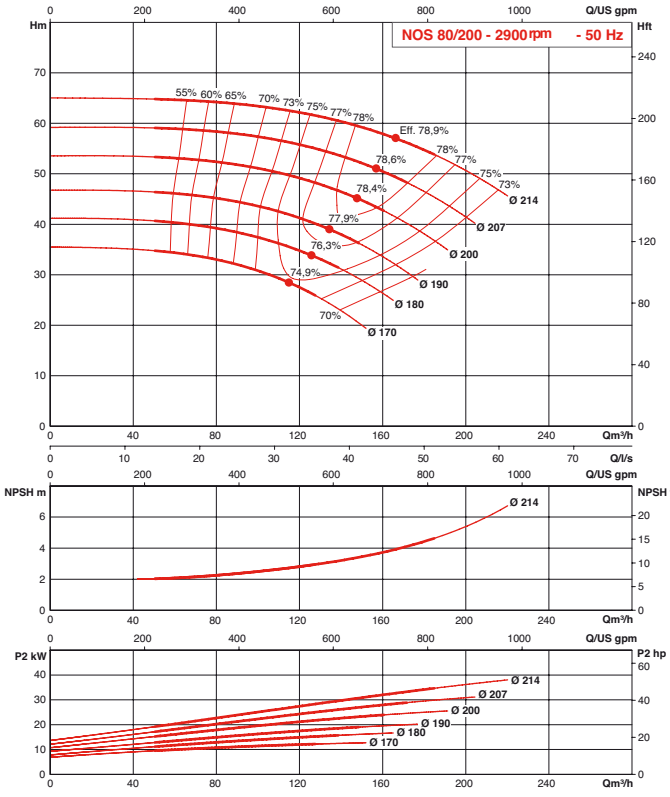

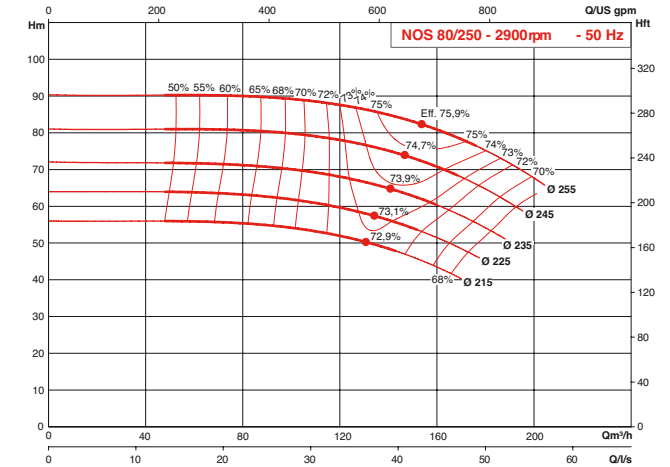

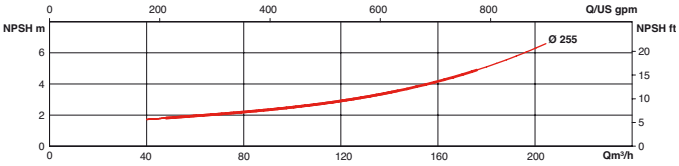

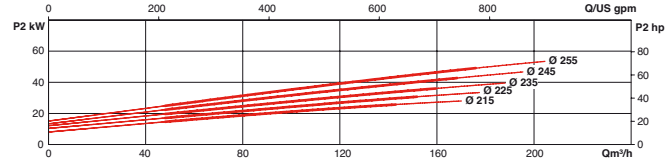

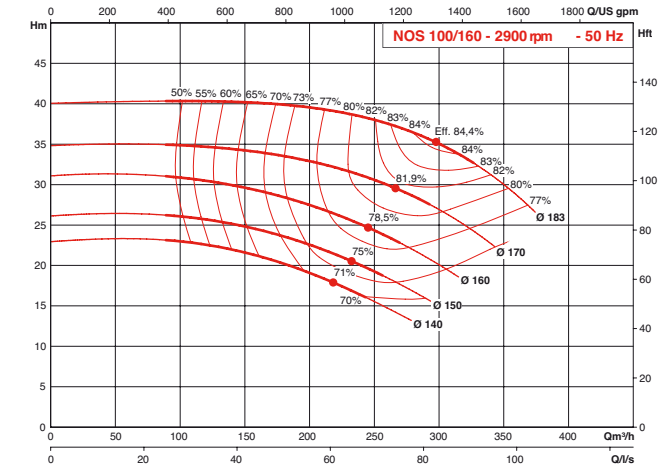

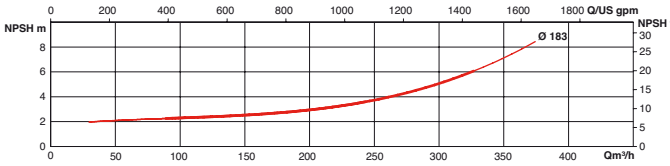

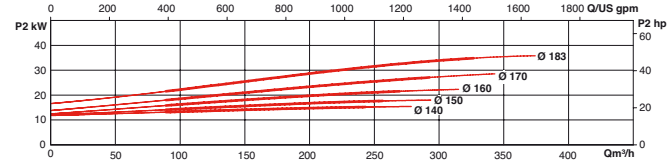

NOS

HYDRAULIC PERFORMANCES 2900 REV/MIN

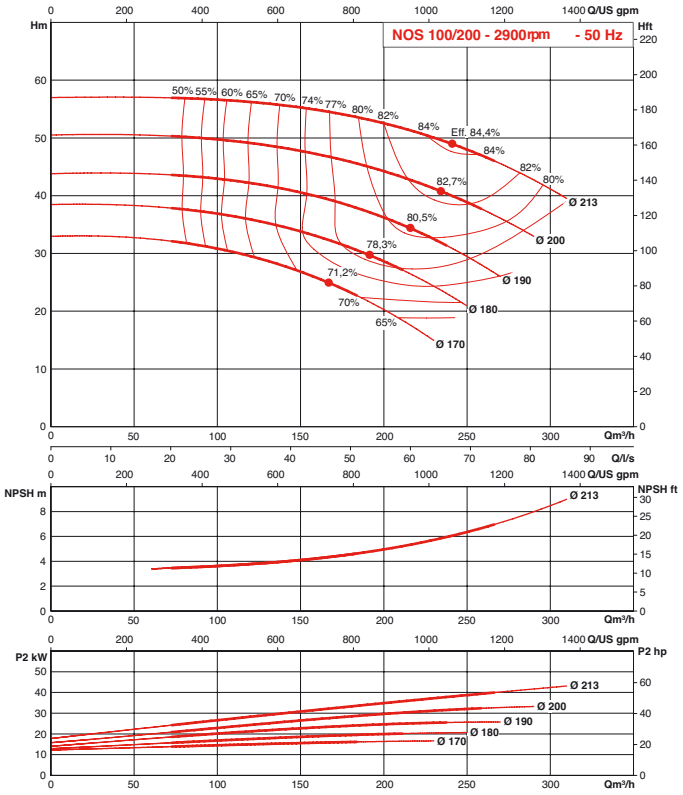

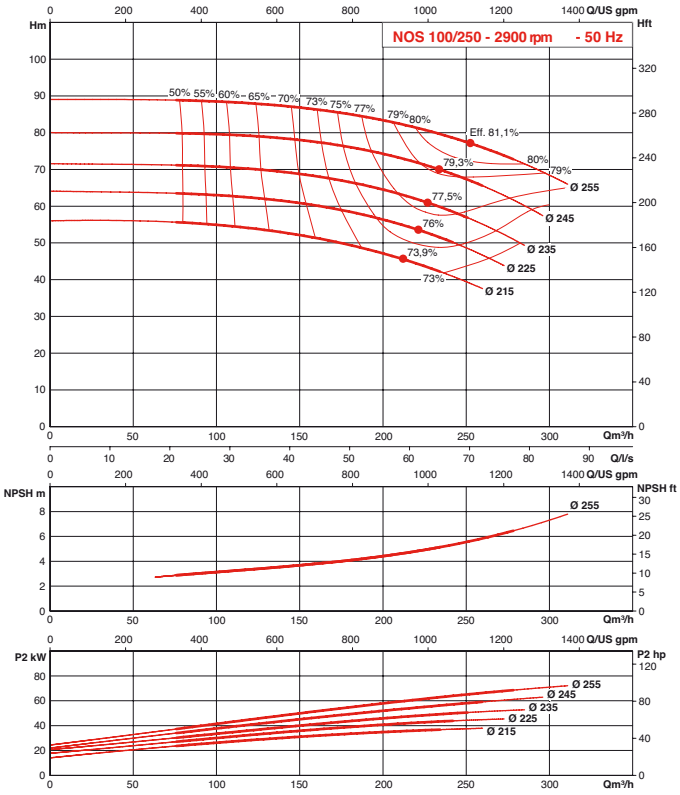

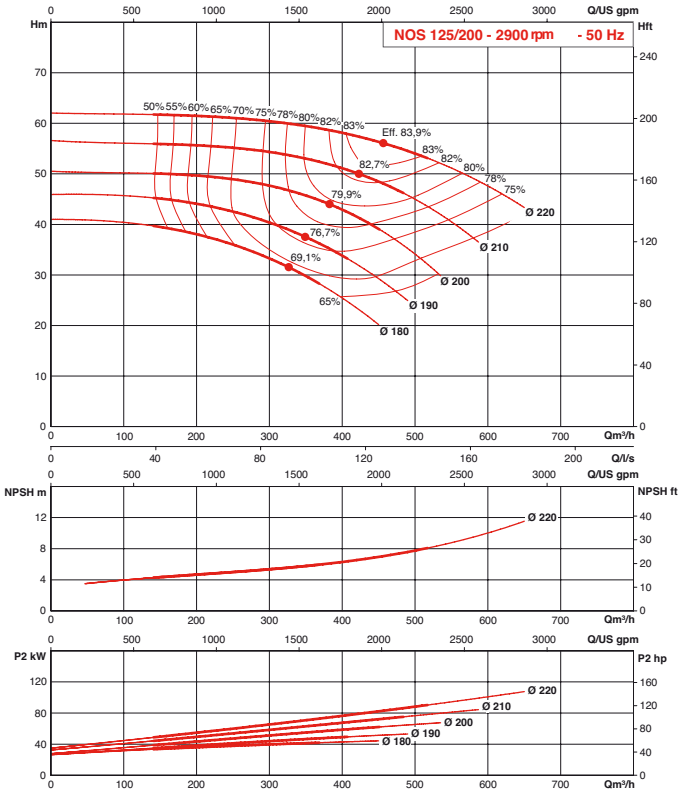

DIMENSIONS – BARE SHAFT PUMP – BEARING 25, 35, 45

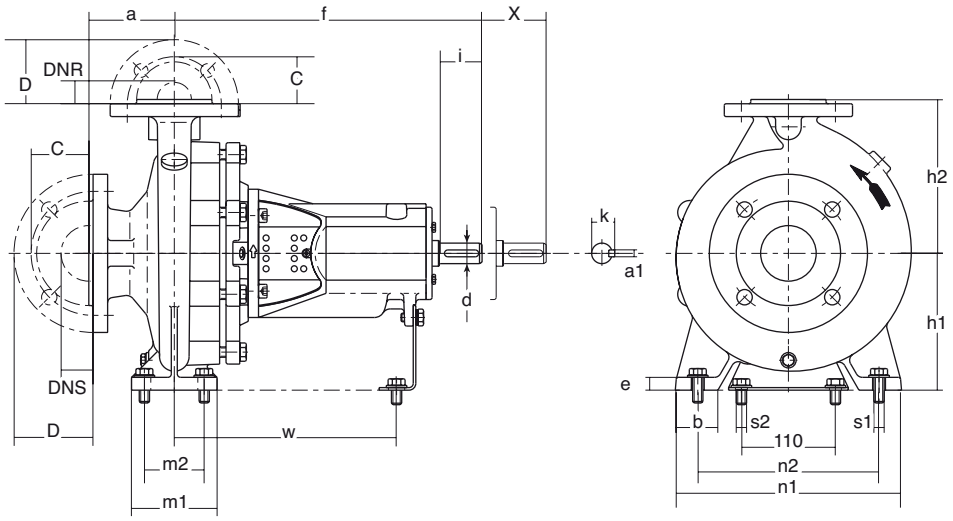

																								Pump
TYPE	Type of bearing	Pmax at 20°C	Flanges			X	m1	m2	h1	h2	n1	n2	s1	s2	b	e	w	a	f	i	d	a1	k	Net Mass
		bar	DNR	DNS	PN	mm	mm	mm	mm	mm	mm	mm	mm	mm	mm	mm	mm	mm	mm	mm	mm	mm	mm	Kg
NOS32/125-08	25	16	32	50	16	100	100	70	112	140	190	140	M12	M12	50	15	260	80	360	50	24	8	27	31
NOS32/160-08	25	16	32	50	16	100	100	70	132	160	240	190	M12	M12	50	15	260	80	360	50	24	8	27	33
NOS32/160B-08	25	16	32	50	16	100	100	70	132	160	240	190	M12	M12	50	15	260	80	360	50	24	8	27	33
NOS32/200-08	25	16	32	50	16	100	100	70	160	180	240	190	M12	M12	50	15	260	80	360	50	24	8	27	34
NOS32/200B-08	25	16	32	50	16	100	100	70	160	180	240	190	M12	M12	50	15	260	80	360	50	24	8	27	34
NOS32/250-08	25	16	32	50	16	100	125	95	180	225	320	250	M12	M12	65	15	260	100	360	50	24	8	27	46
NOS40/125-08	25	16	40	65	16	100	100	70	112	140	210	160	M12	M12	50	15	260	80	360	50	24	8	27	28
NOS40/160-08	25	16	40	65	16	100	100	70	132	160	240	190	M12	M12	50	15	260	80	360	50	24	8	27	30
NOS40/200-08	25	16	40	65	16	100	100	70	160	180	265	212	M12	M12	50	15	260	100	360	50	24	8	27	36
NOS40/250-08	25	16	40	65	16	100	125	95	180	225	320	250	M12	M12	65	15	260	100	360	50	24	8	27	46
NOS40/315-08	35	16	40	65	16	100	125	95	225	250	345	280	M12	M12	65	18	340	125	470	80	32	10	35	73
NOS50/125-08	25	16	50	65	16	100	100	70	132	160	240	190	M12	M12	50	15	260	100	360	50	24	8	27	30
NOS50/160-08	25	16	50	65	16	100	100	70	160	180	265	212	M12	M12	50	15	260	100	360	50	24	8	27	36
NOS50/200-08	25	16	50	65	16	100	100	70	160	200	265	212	M12	M12	50	15	260	100	360	50	24	8	27	40
NOS50/250-08	25	16	50	65	16	100	125	95	180	225	320	250	M12	M12	65	15	260	100	360	50	24	8	27	50
NOS50/315-08	35	16	50	65	16	100	125	95	225	280	345	280	M12	M12	65	17	340	125	470	80	32	10	35	88
NOS65/125-08	25	16	65	80	16	100	125	95	160	180	280	212	M12	M12	65	15	260	100	360	50	24	8	27	33
NOS65/160-08	25	16	65	80	16	100	125	95	160	200	280	212	M12	M12	65	15	260	100	360	50	24	8	27	39
NOS65/200-08	25	16	65	80	16	100	125	95	180	225	320	250	M12	M12	65	15	260	100	360	50	24	8	27	45
NOS65/250-08	35	16	65	80	16	100	160	120	200	250	360	280	M16	M12	80	15	340	100	470	80	32	10	35	70
NOS65/315-08	35	16	65	80	16	100	160	120	225	280	400	315	M16	M12	80	18	340	125	470	80	32	10	35	92
NOS80/160-08	25	16	80	100	16	140	125	95	180	225	320	250	M12	M12	65	15	260	125	360	50	24	8	27	43
NOS80/200-08	35	16	80	100	16	140	125	95	180	250	345	280	M12	M12	65	15	340	125	470	80	32	10	35	60
NOS80/250-08	35	16	80	100	16	140	160	120	200	280	400	315	M16	M12	80	18	340	125	470	80	32	10	35	75
NOS80/315-08	35	16	80	100	16	140	160	120	250	315	400	315	M16	M12	80	18	340	125	470	80	32	10	35	95
NOS80/400-08	45	16	80	125	16	140	160	120	280	355	435	355	M16	M12	80	18	370	125	530	110	42	12	45	154
NOS100/160-08	35	16	100	125	16	140	160	120	200	280	360	280	M16	M12	80	18	340	125	470	80	32	10	35	78
NOS100/200-08	35	16	100	125	16	140	160	120	200	280	360	280	M16	M12	80	18	340	125	470	80	32	10	35	70
NOS100/250-08	35	16	100	125	16	140	160	120	225	280	400	315	M16	M12	80	18	340	140	470	80	32	10	35	85
NOS100/315-08	35	16	100	125	16	140	160	120	250	315	400	315	M16	M12	80	18	340	140	470	80	32	10	35	104
NOS100/400-08	45	16	100	125	16	140	200	150	280	355	500	400	M20	M12	100	18	370	140	530	110	42	12	45	166
NOS125/200-08	35	16	125	150	16	140	160	120	250	315	400	315	M16	M12	80	18	340	140	470	80	32	10	35	100
NOS125/250-08	35	16	125	150	16	140	160	120	250	355	400	315	M16	M12	80	18	340	140	470	80	32	10	35	102
NOS125/315-08	45	16	125	150	16	140	200	150	280	355	500	400	M20	M12	100	18	370	140	530	110	42	12	45	145
NOS125/400-08	45	16	125	150	16	140	200	150	315	400	500	400	M20	M12	100	18	370	140	530	110	42	12	45	177
NOS150/200-08	35	16	150	200	16	140	200	150	280	400	550	450	M20	M12	100	20	340	160	470	80	32	10	35	123
NOS150/250-08	35	16	150	200	16	140	200	150	280	400	500	400	M20	M12	100	20	340	160	470	80	32	10	35	128
NOS150/315-08	45	16	150	200	16	140	200	150	280	400	550	450	M20	M12	100	18	370	160	530	110	42	12	45	159
NOS150/400-08	45	16	150	200	16	140	200	150	315	450	550	450	M20	M12	100	18	370	160	530	110	42	12	45	207

NOS

DIMENSIONS AND LOCATION – ACCESSORY CONNECTIONS – BEARING 25, 35, 45

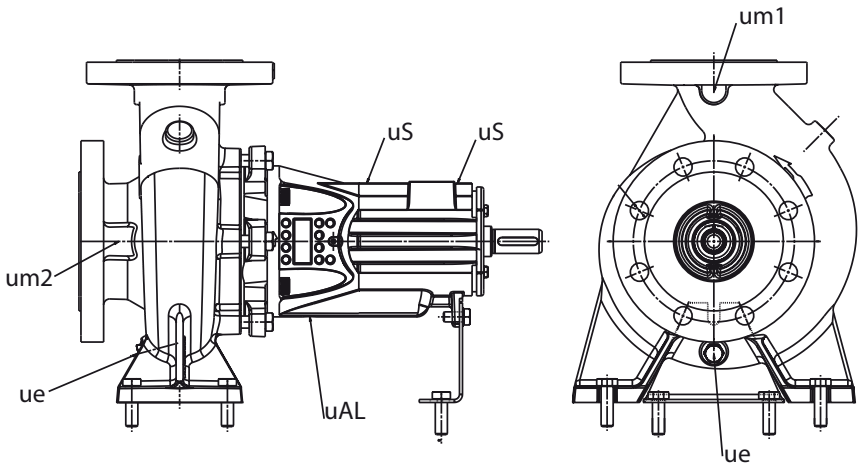

Meaning of codes

um1	Pressure measurement only upon request
um2	Pressure measurement only upon request
ue	Drain
uAL	Drip collection
us	Hole for sensor

Connection dimensions

Size	um1	um2	ue	uAL	us
32/125 [1]	G1/4	G1/4	G1/4	13	M8
32/160					
32/200					
32/250					
40/125 [1]					
40/160					
40/200					
40/250					
40/315					
50/125 [1]					
50/160					
50/200					
50/250					
50/315					
65/125 [1]			G3/8		
65/160					
65/200					
65/250					
65/315					
80/160					
80/200					
80/250					
80/315					
80/400					
100/160					
100/200					
100/250					
100/315					
100/400					
125/200					
125/250					
125/315					
125/400					
150/200					
150/250					
150/315					
150/400					

DIMENSIONS – UNITS – 1450 MIN -1 WITHOUT SPACER

*: Dimensions linked to motor, non contractual

Optional drip collector and 3rd attachment point see table

Suction/discharge flanges machined according to standard ISO 7005 see bare pump outline

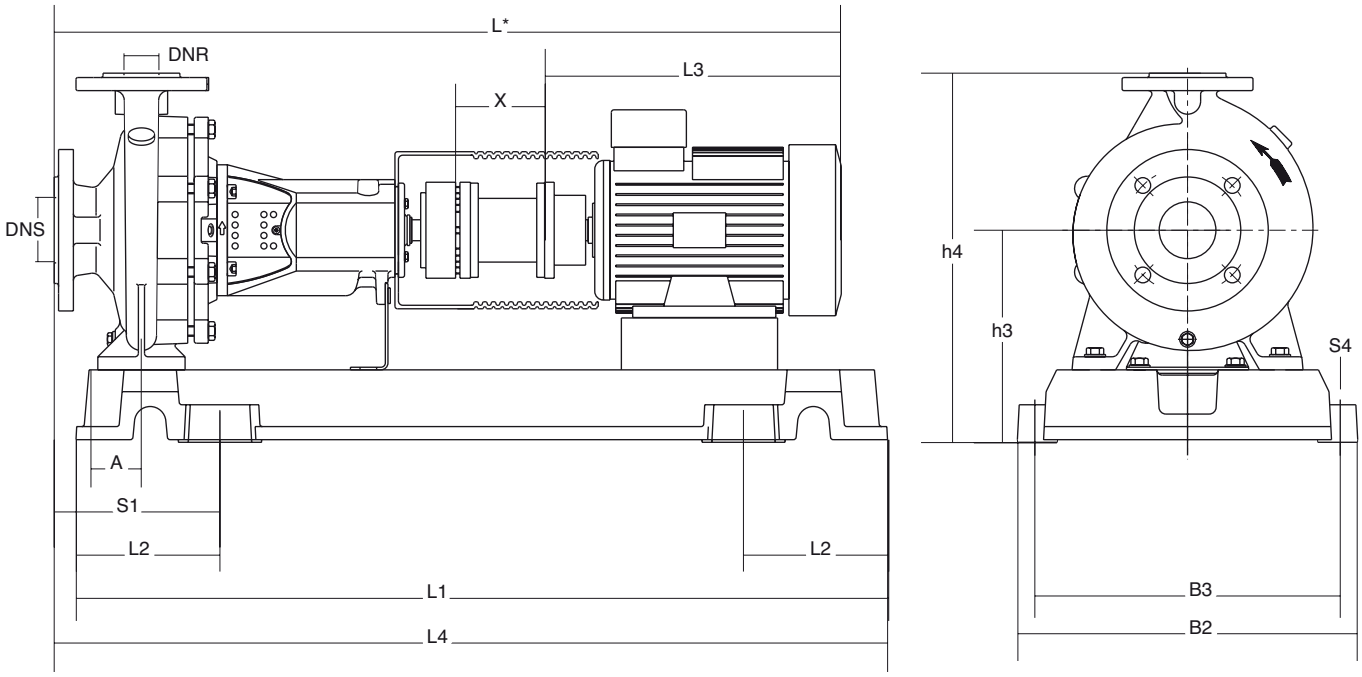

DIMENSIONS – UNITS – 1450 MIN-1 WITH SPACER

										Unit								Base plate					
TYPE	Motor housing type	Kw	min-1	Base plate	Coupling type	DNR	DNS	Voltage	A	L	L3	L4	h3	h4	S1	X	L1	L2	B2	B3	S4	Net Mass
		kW						v	mm	mm	mm	mm	mm	mm	mm	mm	mm	mm	mm	mm	mm	kg
NOS32/125-0.37-4-12	71	0,37	1450	N2	H80	32	50	3-230-400	60	792,5	252,5	835	195	335	150	100	830	145	360	320	19	85
NOS32/160-0.37-4-12	71	0,37	1450	N2	H80	32	50	3-230-400	60	792,5	252,5	835	215	375	150	100	830	145	360	320	19	97
NOS32/160-0.55-4-12	80	0,55	1450	N2	H80	32	50	3-230-400	60	823,5	283,5	835	215	375	150	100	830	145	360	320	19	90
NOS32/160-0.75-4-12	80	0,75	1450	N2	H80	32	50	3-230-400	60	823,5	283,5	835	215	375	150	100	830	145	360	320	19	94
NOS32/160B-0.37-4-12	71	0,37	1450	N2	H80	32	50	3-230-400	60	792,5	252,5	835	215	375	150	100	830	145	360	320	19	97
NOS32/160B-0.55-4-12	80	0,55	1450	N2	H80	32	50	3-230-400	60	823,5	283,5	835	215	375	150	100	830	145	360	320	19	90
NOS32/160B-0.75-4-12	80	0,75	1450	N2	H80	32	50	3-230-400	60	823,5	283,5	835	215	375	150	100	830	145	360	320	19	94
NOS32/200-0.55-4-12	80	0,55	1450	N2	H80	32	50	3-230-400	60	823,5	283,5	835	243	423	150	100	830	145	360	320	19	93
NOS32/200-0.75-4-12	80	0,75	1450	N2	H80	32	50	3-230-400	60	823,5	283,5	835	243	423	150	100	830	145	360	320	19	96
NOS32/200-1.1-4-12	90S	1,1	1450	N3	H80	32	50	3-230-400	60	836,5	296,5	935	243	423	170	100	930	165	390	350	19	117
NOS32/200-1.5-4-12	90L	1,5	1450	N3	H80	32	50	3-230-400	60	856,5	316,5	935	243	423	170	100	930	165	390	350	19	117
NOS32/200B-0.55-4-12	80	0,55	1450	N2	H80	32	50	3-230-400	60	823,5	283,5	835	243	423	150	100	830	145	360	320	19	93
NOS32/200B-0.75-4-12	80	0,75	1450	N2	H80	32	50	3-230-400	60	823,5	283,5	835	243	423	150	100	830	145	360	320	19	96
NOS32/200B-1.1-4-12	90S	1,1	1450	N3	H80	32	50	3-230-400	60	836,5	296,5	935	243	423	170	100	930	165	390	350	19	117
NOS32/200B-1.5-4-12	90L	1,5	1450	N3	H80	32	50	3-230-400	60	856,5	316,5	935	243	423	170	100	930	165	390	350	19	117
NOS32/250-0.75-4-12	80	0,75	1450	N4	H80	32	50	3-230-400	72,5	843,5	283,5	1042,5	283	508	197,5	100	1030	185	450	400	24	141
NOS32/250-1.1-4-12	90S	1,1	1450	N4	H80	32	50	3-230-400	72,5	856,5	296,5	1042,5	283	508	197,5	100	1030	185	450	400	24	146
NOS32/250-1.5-4-12	90L	1,5	1450	N4	H80	32	50	3-230-400	72,5	876,5	316,5	1042,5	283	508	197,5	100	1030	185	450	400	24	146
NOS32/250-2.2-4-12	100L	2,2	1450	N4	H80	32	50	3-230-400	72,5	912	352	1042,5	283	508	197,5	100	1030	185	450	400	24	152

NOS

DIMENSIONS – UNITS – 1450 MIN -1 WITH SPACER

									Unit									Base plate					
TYPE	Motor housing type	Kw	min-1	Base Plate	Type Coupling	DNR	DNS	Voltage	A	L	L3	L4	h3	h4	S1	X	L1	L2	B2	B3	S4	Net Mass
		kW						v	mm	mm	mm	mm	mm	mm	mm	mm	mm	mm	mm	mm	mm	kg
NOS40/125-0.37-4-12	71	0,37	1450	N2	H80	40	65	3-230-400	60	792,5	252,5	835	195	335	150	100	830	145	360	320	19	82
NOS40/125-0.55-4-12	80	0,55	1450	N2	H80	40	65	3-230-400	60	823,5	283,5	835	310	195	150	100	830	145	360	320	19	84
NOS40/160-0.37-4-12	71	0,37	1450	N2	H80	40	65	3-230-400	60	792,5	252,5	835	322	215	150	100	830	145	360	320	19	94
NOS40/160-0.55-4-12	80	0,55	1450	N2	H80	40	65	3-230-400	60	823,5	283,5	835	330	215	150	100	830	145	360	320	19	87
NOS40/160-0.75-4-12	80	0,75	1450	N2	H80	40	65	3-230-400	60	823,5	283,5	835	330	215	150	100	830	145	360	320	19	91
NOS40/160-1.1-4-12	90S	1,1	1450	N2	H80	40	65	3-230-400	60	836,5	296,5	835	347	215	150	100	830	145	360	320	19	96
NOS40/160-1.5-4-12	90L	1,5	1450	N3	H80	40	65	3-230-400	60	856,5	316,5	935	347	215	170	100	930	165	390	350	19	106
NOS40/200-0.55-4-12	80	0,55	1450	N3	H80	40	65	3-230-400	60	843,5	283,5	955	358	243	190	100	930	165	390	350	19	105
NOS40/200-0.75-4-12	80	0,75	1450	N3	H80	40	65	3-230-400	60	843,5	283,5	955	358	243	190	100	930	165	390	350	19	109
NOS40/200-1.1-4-12	90S	1,1	1450	N3	H80	40	65	3-230-400	60	856,5	296,5	955	375	243	190	100	930	165	390	350	19	119
NOS40/200-1.5-4-12	90L	1,5	1450	N3	H80	40	65	3-230-400	60	876,5	316,5	955	375	243	190	100	930	165	390	350	19	119
NOS40/200-2.2-4-12	100L	2,2	1450	N3	H80	40	65	3-230-400	60	912	352	955	384	243	190	100	930	165	390	350	19	125
NOS40/250-1.1-4-12	90S	1,1	1450	N4	H80	40	65	3-230-400	72,5	856,5	296,5	1042,5	415	283	197,5	100	1030	185	450	400	24	146
NOS40/250-1.5-4-12	90L	1,5	1450	N4	H80	40	65	3-230-400	72,5	876,5	316,5	1042,5	415	283	197,5	100	1030	185	450	400	24	146
NOS40/250-2.2-4-12	100L	2,2	1450	N4	H80	40	65	3-230-400	72,5	912	352	1042,5	424	283	197,5	100	1030	185	450	400	24	152
NOS40/250-3-4-12	100L	3	1450	N4	H80	40	65	3-230-400	72,5	912	352	1042,5	424	283	197,5	100	1030	185	450	400	24	153
NOS40/315-2.2-4-12	100L	2,2	1450	N5	H95	40	65	3-230-400	72,5	1047	352	1187,5	469	328	242,5	100	1150	205	490	440	24	217
NOS40/315-3-4-12	100L	3	1450	N5	H95	40	65	3-230-400	72,5	1047	352	1187,5	469	328	242,5	100	1150	205	490	440	24	218
NOS40/315-4-4-12	112M	4	1450	N5	H95	40	65	3-230-400	72,5	1090,5	395,5	1187,5	477	328	242,5	100	1150	205	490	440	24	227
NOS40/315-5.5-4-12	123S	5,5	1450	N5	H95	40	65	3-400	72,5	1135,5	440,5	1187,5	510	328	242,5	100	1150	205	490	440	24	248
NOS50/125-0.37-4-12	71	0,37	1450	N2	H80	50	65	3-230-400	60	812,5	252,5	855	322	215	170	100	830	145	360	320	19	94
NOS50/125-0.55-4-12	80	0,55	1450	N2	H80	50	65	3-230-400	60	843,5	283,5	855	330	215	170	100	830	145	360	320	19	87
NOS50/125-0.75-4-12	80	0,75	1450	N2	H80	50	65	3-230-400	60	843,5	283,5	855	330	215	170	100	830	145	360	320	19	91
NOS50/160-0.55-4-12	80	0,55	1450	N3	H80	50	65	3-230-400	60	843,5	283,5	955	358	243	190	100	930	165	390	350	19	105
NOS50/160-0.75-4-12	80	0,75	1450	N3	H80	50	65	3-230-400	60	843,5	283,5	955	358	243	190	100	930	165	390	350	19	109
NOS50/160-1.1-4-12	90S	1,1	1450	N3	H80	50	65	3-230-400	60	856,5	296,5	955	375	243	190	100	930	165	390	350	19	119
NOS50/160-1.5-4-12	90L	1,5	1450	N3	H80	50	65	3-230-400	60	876,5	316,5	955	375	243	190	100	930	165	390	350	19	119
NOS50/160-2.2-4-12	100L	2,2	1450	N3	H80	50	65	3-230-400	60	912	352	955	384	243	190	100	930	165	390	350	19	125
NOS50/200-1.1-4-12	90S	1,1	1450	N3	H80	50	65	3-230-400	60	856,5	296,5	955	375	243	190	100	930	165	390	350	19	123
NOS50/200-1.5-4-12	90L	1,5	1450	N3	H80	50	65	3-230-400	60	876,5	316,5	955	375	243	190	100	930	165	390	350	19	123
NOS50/200-2.2-4-12	100L	2,2	1450	N3	H80	50	65	3-230-400	60	912	352	955	384	243	190	100	930	165	390	350	19	129
NOS50/200-3-4-12	100L	3	1450	N3	H80	50	65	3-230-400	60	912	352	955	384	243	190	100	930	165	390	350	19	130
NOS50/250-1.5-4-12	90L	1,5	1450	N4	H80	50	65	3-230-400	72,5	876,5	316,5	1042,5	415	283	197,5	100	1030	185	450	400	24	150
NOS50/250-2.2-4-12	100L	2,2	1450	N4	H80	50	65	3-230-400	72,5	912	352	1042,5	424	283	197,5	100	1030	185	450	400	24	156
NOS50/250-3-4-12	100L	3	1450	N4	H80	50	65	3-230-400	72,5	912	352	1042,5	424	283	197,5	100	1030	185	450	400	24	157
NOS50/250-4-4-12	112M	4	1450	N4	H80	50	65	3-230-400	72,5	955,5	395,5	1042,5	432	283	197,5	100	1030	185	450	400	24	162
NOS50/315-4-4-12	112M	4	1450	N5	H95	50	65	3-230-400	72,5	1090,5	395,5	1187,5	477	328	242,5	100	1150	205	490	440	24	242
NOS50/315-5.5-4-12	123S	5,5	1450	N5	H95	50	65	3-400	72,5	1135,5	440,5	1187,5	510	328	242,5	100	1150	205	490	440	24	263
NOS50/315-7.5-4-12	132M	7,5	1450	N5	H95	50	65	3-400	72,5	1170,5	475,5	1187,5	510	328	242,5	100	1150	205	490	440	24	265
NOS50/315-9-4-12	132M	9	1450	N5	H95	50	65	3-400	72,5	1170,5	475,5	1187,5	510	328	242,5	100	1150	205	490	440	24	278
NOS65/125-0.55-4-12	80	0,55	1450	N3	H80	65	80	3-230-400	72,5	843,5	283,5	942,5	358	243	177,5	100	930	165	390	350	19	102
NOS65/125-0.75-4-12	80	0,75	1450	N3	H80	65	80	3-230-400	72,5	843,5	283,5	942,5	358	243	177,5	100	930	165	390	350	19	105
NOS65/125-1.1-4-12	90S	1,1	1450	N4	H80	65	80	3-230-400	72,5	856,5	296,5	1042,5	395	263	197,5	100	1030	185	450	400	24	128
NOS65/160-0.75-4-12	80	0,75	1450	N3	H80	65	80	3-230-400	72,5	843,5	283,5	942,5	358	243	177,5	100	930	165	390	350	19	112
NOS65/160-1.5-4-12	90L	1,5	1450	N3	H80	65	80	3-230-400	72,5	876,5	316,5	942,5	375	243	177,5	100	930	165	390	350	19	122
NOS65/160-2.2-4-12	100L	2,2	1450	N3	H80	65	80	3-230-400	72,5	912	352	942,5	384	243	177,5	100	930	165	390	350	19	128
NOS65/200-1.1-4-12	90S	1,1	1450	N4	H80	65	80	3-230-400	72,5	856,5	296,5	1042,5	415	283	197,5	100	1030	185	450	400	24	145
NOS65/200-1.5-4-12	90L	1,5	1450	N4	H80	65	80	3-230-400	72,5	876,5	316,5	1042,5	415	283	197,5	100	1030	185	450	400	24	145
NOS65/200-2.2-4-12	100L	2,2	1450	N4	H80	65	80	3-230-400	72,5	912	352	1042,5	424	283	197,5	100	1030	185	450	400	24	151

DIMENSIONS – UNITS – 1450 MIN -1 WITH SPACER

									Unit								Base plate					
TYPE	Motor housing type	Kw	min-1	Base Plate	Type Coupling	DNR	DNS	Voltage	A	L	L3	L4	h3	h4	S1	X	L1	L2	B2	B3	S4	Net Mass
		kW						v	mm	mm	mm	mm	mm	mm	mm	mm	mm	mm	mm	mm	mm	kg
NOS65/200-3-4-12	100L	3	1450	N4	H80	65	80	3-230-400	72,5	912	352	1042,5	283	508	197,5	100	1030	185	450	400	24	152
NOS65/200-4-4-12	112M	4	1450	N4	H80	65	80	3-230-400	72,5	955,5	395,5	1042,5	283	508	197,5	100	1030	185	450	400	24	157
NOS65/250-2.2-4-12	100L	2,2	1450	N5	H95	65	80	3-230-400	90	1022	352	1145	303	553	200	100	1150	205	490	440	24	213
NOS65/250-3-4-12	100L	3	1450	N5	H95	65	80	3-230-400	90	1022	352	1145	303	553	200	100	1150	205	490	440	24	214
NOS65/250-4-4-12	112M	4	1450	N5	H95	65	80	3-230-400	90	1065,5	395,5	1145	303	553	200	100	1150	205	490	440	24	221
NOS65/250-5.5-4-12	123S	5,5	1450	N5	H95	65	80	3-400	90	1110,5	440,5	1145	303	553	200	100	1150	205	490	440	24	240
NOS65/315-5.5-4-12	123S	5,5	1450	N6	H95	65	80	3-400	90	1135,5	440,5	1305	328	608	240	100	1290	225	540	490	24	298
NOS65/315-7.5-4-12	132M	7,5	1450	N6	H95	65	80	3-400	90	1170,5	475,5	1305	328	608	240	100	1290	225	540	490	24	300
NOS65/315-9-4-12	132M	9	1450	N6	H95	65	80	3-400	90	1170,5	475,5	1305	328	608	240	100	1290	225	540	490	24	313
NOS65/315-11-4-12	160M	11	1450	N6	H95	65	80	3-400	90	1281	586	1305	328	608	240	100	1290	225	540	490	24	320
NOS65/315-15-4-12	160L	15	1450	N7	H110	65	80	3-400	90	1281	586	1455	328	608	265	100	1440	250	610	550	29	382
NOS80/160-1.1-4-12	90S	1,1	1450	N4	H80	80	100	3-230-400	72,5	921,5	296,5	1067,5	283	508	222,5	140	1030	185	450	400	24	143
NOS80/160-1.5-4-12	90L	1,5	1450	N4	H80	80	100	3-230-400	72,5	941,5	316,5	1067,5	283	508	222,5	140	1030	185	450	400	24	143
NOS80/160-2.2-4-12	100L	2,2	1450	N4	H80	80	100	3-230-400	72,5	977	352	1067,5	283	508	222,5	140	1030	185	450	400	24	149
NOS80/160-3-4-12	100L	3	1450	N4	H80	80	100	3-230-400	72,5	977	352	1067,5	283	508	222,5	140	1030	185	450	400	24	150
NOS80/160-4-4-12	112M	4	1450	N4	H80	80	100	3-230-400	72,5	1020,5	395,5	1067,5	283	508	222,5	140	1030	185	450	400	24	155
NOS80/200-1.5-4-12	90L	1,5	1450	N5	H95	80	100	3-230-400	72,5	1051,5	316,5	1187,5	283	533	242,5	140	1150	205	490	440	24	195
NOS80/200-2.2-4-12	100L	2,2	1450	N5	H95	80	100	3-230-400	72,5	1087	352	1187,5	283	533	242,5	140	1150	205	490	440	24	201
NOS80/200-3-4-12	100L	3	1450	N5	H95	80	100	3-230-400	72,5	1087	352	1187,5	283	533	242,5	140	1150	205	490	440	24	202
NOS80/200-4-4-12	112M	4	1450	N5	H95	80	100	3-230-400	72,5	1130,5	395,5	1187,5	283	533	242,5	140	1150	205	490	440	24	207
NOS80/200-5.5-4-12	123S	5,5	1450	N5	H95	80	100	3-400	72,5	1175,5	440,5	1187,5	283	533	242,5	140	1150	205	490	440	24	226
NOS80/250-3-4-12	100L	3	1450	N6	H95	80	100	3-230-400	90	1087	352	1305	303	583	240	140	1290	225	540	490	24	250
NOS80/250-4-4-12	112M	4	1450	N6	H95	80	100	3-230-400	90	1130,5	395,5	1305	303	583	240	140	1290	225	540	490	24	257
NOS80/250-5.5-4-12	123S	5,5	1450	N6	H95	80	100	3-400	90	1175,5	440,5	1305	303	583	240	140	1290	225	540	490	24	276
NOS80/250-7.5-4-12	132M	7,5	1450	N6	H95	80	100	3-400	90	1210,5	475,5	1305	303	583	240	140	1290	225	540	490	24	278
NOS80/315-5.5-4-12	123S	5,5	1450	N6	H95	80	100	3-400	90	1175,5	440,5	1305	353	668	240	140	1290	225	540	490	24	304
NOS80/315-7.5-4-12	132M	7,5	1450	N6	H95	80	100	3-400	90	1210,5	475,5	1305	353	668	240	140	1290	225	540	490	24	306
NOS80/315-9-4-12	132M	9	1450	N6	H95	80	100	3-400	90	1210,5	475,5	1305	353	668	240	140	1290	225	540	490	24	319
NOS80/315-11-4-12	160M	11	1450	N6	H95	80	100	3-400	90	1321	586	1305	353	668	240	140	1290	225	540	490	24	329
NOS80/315-15-4-12	160L	15	1450	N6	H110	80	100	3-400	90	1321	586	1305	353	668	240	140	1290	225	540	490	24	345
NOS80/400-11-4-12	160M	11	1450	N7	H95	80	125	3-400	90	1381	586	1455	383	738	265	140	1440	250	610	550	29	443
NOS80/400-15-4-12	160L	15	1450	N7	H110	80	125	3-400	90	1381	586	1455	383	738	265	140	1440	250	610	550	29	459
NOS80/400-18.5-4-12	180M	18,5	1450	N7	H110	80	125	3-400	90	1424	629	1455	383	738	265	140	1440	250	610	550	29	483
NOS80/400-22-4-12	180L	22	1450	N7	H125	80	125	3-400	90	1424	629	1455	383	738	265	140	1440	250	610	550	29	503
NOS80/400-30-4-12	200L	30	1450	N7	H125	80	125	3-400	90	1460	665	1455	383	738	265	140	1440	250	610	550	29	534
NOS100/160-2.2-4-12	100L	2,2	1450	N5	H95	100	125	3-230-400	90	1087	352	1170	303	583	225	140	1150	205	490	440	24	221
NOS100/160-3-4-12	100L	3	1450	N5	H95	100	125	3-230-400	90	1087	352	1170	303	583	225	140	1150	205	490	440	24	222
NOS100/160-4-4-12	112M	4	1450	N5	H95	100	125	3-230-400	90	1130,5	395,5	1170	303	583	225	140	1150	205	490	440	24	229
NOS100/160-5.5-4-12	123S	5,5	1450	N5	H95	100	125	3-400	90	1175,5	440,5	1170	303	583	225	140	1150	205	490	440	24	248
NOS100/200-2.2-4-12	100L	2,2	1450	N5	H95	100	125	3-230-400	90	1087	352	1170	303	583	225	140	1150	205	490	440	24	213
NOS100/200-3-4-12	100L	3	1450	N5	H95	100	125	3-230-400	90	1087	352	1170	303	583	225	140	1150	205	490	440	24	214
NOS100/200-4-4-12	112M	4	1450	N5	H95	100	125	3-230-400	90	1130,5	395,5	1170	303	583	225	140	1150	205	490	440	24	221
NOS100/200-5.5-4-12	123S	5,5	1450	N5	H95	100	125	3-400	90	1175,5	440,5	1170	303	583	225	140	1150	205	490	440	24	240
NOS100/200-7.5-4-12	132M	7,5	1450	N5	H95	100	125	3-400	90	1210,5	475,5	1170	303	583	225	140	1150	205	490	440	24	242
NOS100/250-4-4-12	112M	4	1450	N6	H95	100	125	3-230-400	90	1145,5	395,5	1320	328	608	255	140	1290	225	540	490	24	270
NOS100/250-5.5-4-12	123S	5,5	1450	N6	H95	100	125	3-400	90	1190,5	440,5	1320	328	608	255	140	1290	225	540	490	24	291
NOS100/250-7.5-4-12	132M	7,5	1450	N6	H95	100	125	3-400	90	1225,5	475,5	1320	328	608	255	140	1290	225	540	490	24	293
NOS100/250-9-4-12	132M	9	1450	N6	H95	100	125	3-400	90	1225,5	475,5	1320	328	608	255	140	1290	225	540	490	24	306
NOS100/250-11-4-12	160M	11	1450	N6	H95	100	125	3-400	90	1336	586	1320	328	608	255	140	1290	225	540	490	24	313

NOS

DIMENSIONS – UNITS – 1450 MIN -1 WITH SPACER

									Unit									Base plate					
TYPE	Motor housing type	Kw	min-1	Base Plate	Type Coupling	DNR	DNS	Voltage	A	L	L3	L4	h3	h4	S1	X	L1	L2	B2	B3	S4	Net Mass
		kW						v	mm	mm	mm	mm	mm	mm	mm	mm	mm	mm	mm	mm	mm	kg
NOS100/315-11-4-12	160M	11	1450	N6	H95	100	125	3-400	90	1336	586	1320	353	668	255	140	1290	225	540	490	24	339
NOS100/315-15-4-12	160L	15	1450	N6	H110	100	125	3-400	90	1336	586	1320	353	668	255	140	1290	225	540	490	24	354
NOS100/315-18.5-4-12	180M	18,5	1450	N7	H110	100	125	3-400	90	1379	629	1470	353	668	280	140	1440	250	610	550	29	424
NOS100/315-22-4-12	180L	22	1450	N7	H125	100	125	3-400	90	1379	629	1470	353	668	280	140	1440	250	610	550	29	444
NOS100/400-15-4-12	160L	15	1450	N8	H110	100	125	3-400	110	1396	586	1650	403	758	300	140	1640	290	660	600	29	511
NOS100/400-18.5-4-12	180M	18,5	1450	N8	H110	100	125	3-400	110	1439	629	1650	403	758	300	140	1640	290	660	600	29	535
NOS100/400-22-4-12	180L	22	1450	N8	H125	100	125	3-400	110	1439	629	1650	403	758	300	140	1640	290	660	600	29	555
NOS100/400-30-4-12	200L	30	1450	N8	H125	100	125	3-400	110	1475	665	1650	403	758	300	140	1640	290	660	600	29	587
NOS100/400-37-4-12	225S	37	1450	N8	H140	100	125	3-400	110	1575	765	1650	403	758	300	140	1640	290	660	600	29	643
NOS100/400-45-4-12	225M	45	1450	N8	H140	100	125	3-400	110	1575	765	1650	403	758	300	140	1640	290	660	600	29	677
NOS125/200-7.5-4-12	132M	7,5	1450	N6	H95	125	150	3-400	90	1225,5	475,5	1320	353	668	255	140	1290	225	540	490	24	311
NOS125/200-9-4-12	132M	9	1450	N6	H95	125	150	3-400	90	1225,5	475,5	1320	353	668	255	140	1290	225	540	490	24	324
NOS125/200-11-4-12	160M	11	1450	N6	H95	125	150	3-400	90	1336	586	1320	353	668	255	140	1290	225	540	490	24	334
NOS125/200-15-4-12	160L	15	1450	N6	H110	125	150	3-400	90	1336	586	1320	353	668	255	140	1290	225	540	490	24	350
NOS125/250-7.5-4-12	132M	7,5	1450	N6	H95	125	150	3-400	90	1225,5	475,5	1320	353	708	255	140	1290	225	540	490	24	313
NOS125/250-9-4-12	132M	9	1450	N6	H95	125	150	3-400	90	1225,5	475,5	1320	353	708	255	140	1290	225	540	490	24	326
NOS125/250-11-4-12	160M	11	1450	N6	H95	125	150	3-400	90	1336	586	1320	353	708	255	140	1290	225	540	490	24	336
NOS125/250-15-4-12	160L	15	1450	N7	H110	125	150	3-400	90	1336	586	1470	353	708	280	140	1440	250	610	550	29	398
NOS125/250-18.5-4-12	180M	18,5	1450	N7	H110	125	150	3-400	90	1379	629	1470	353	708	280	140	1440	250	610	550	29	422
NOS125/315-15-4-12	160L	15	1450	N8	H110	125	150	3-400	110	1396	586	1650	403	758	300	140	1640	290	660	600	29	489
NOS125/315-18.5-4-12	180M	18,5	1450	N8	H110	125	150	3-400	110	1439	629	1650	403	758	300	140	1640	290	660	600	29	514
NOS125/315-22-4-12	180L	22	1450	N8	H125	125	150	3-400	110	1439	629	1650	403	758	300	140	1640	290	660	600	29	534
NOS125/315-30-4-12	200L	30	1450	N8	H125	125	150	3-400	110	1475	665	1650	403	758	300	140	1640	290	660	600	29	565
NOS125/315-37-4-12	225S	37	1450	N8	H140	125	150	3-400	110	1575	765	1650	403	758	300	140	1640	290	660	600	29	622
NOS125/400-30-4-12	200L	30	1450	N8	H125	125	150	3-400	110	1475	665	1650	438	838	300	140	1640	290	660	600	29	609
NOS125/400-37-4-12	225S	37	1450	N8	H140	125	150	3-400	110	1575	765	1650	438	838	300	140	1640	290	660	600	29	665
NOS125/400-45-4-12	225M	45	1450	N8	H140	125	150	3-400	110	1575	765	1650	438	838	300	140	1640	290	660	600	29	699
NOS125/400-55-4-12	250M	55	1450	N8	H160	125	150	3-400	110	1594	784	1650	438	838	300	140	1640	290	660	600	29	731
NOS125/400-75-4-12	280S	75	1450	N9	H180	125	150	3-400	110	1881	1071	1850	438	838	330	140	1840	320	730	670	29	1182
NOS150/200-7.5-4-12	132M	7,5	1450	N9	H95	150	200	3-400	110	1245,5	475,5	1870	403	803	350	140	1840	320	730	670	29	519
NOS150/200-9-4-12	132M	9	1450	N9	H95	150	200	3-400	110	1245,5	475,5	1870	403	803	350	140	1840	320	730	670	29	531
NOS150/200-11-4-12	160M	11	1450	N9	H95	150	200	3-400	110	1356	586	1870	403	803	350	140	1840	320	730	670	29	545
NOS150/200-15-4-12	160L	15	1450	N9	H110	150	200	3-400	110	1356	586	1870	403	803	350	140	1840	320	730	670	29	561
NOS150/200-18.5-4-12	180M	18,5	1450	N9	H110	150	200	3-400	110	1399	629	1870	403	803	350	140	1840	320	730	670	29	585
NOS150/250-15-4-12	160L	15	1450	N8	H110	150	200	3-400	110	1356	586	1670	403	803	320	140	1640	290	660	600	29	472
NOS150/250-18.5-4-12	180M	18,5	1450	N8	H110	150	200	3-400	110	1399	629	1670	403	803	320	140	1640	290	660	600	29	496
NOS150/250-22-4-12	180L	22	1450	N8	H125	150	200	3-400	110	1399	629	1670	403	803	320	140	1640	290	660	600	29	516
NOS150/250-30-4-12	200L	30	1450	N8	H125	150	200	3-400	110	1435	665	1670	403	803	320	140	1640	290	660	600	29	548
NOS150/315-22-4-12	180L	22	1450	N9	H125	150	200	3-400	110	1459	629	1870	403	803	350	140	1840	320	730	670	29	642
NOS150/315-30-4-12	200L	30	1450	N9	H125	150	200	3-400	110	1495	665	1870	403	803	350	140	1840	320	730	670	29	673
NOS150/315-37-4-12	225S	37	1450	N9	H140	150	200	3-400	110	1595	765	1870	403	803	350	140	1840	320	730	670	29	730
NOS150/315-45-4-12	225M	45	1450	N9	H140	150	200	3-400	110	1595	765	1870	403	803	350	140	1840	320	730	670	29	764
NOS150/315-55-4-12	250M	55	1450	N9	H160	150	200	3-400	110	1614	784	1870	403	803	350	140	1840	320	730	670	29	796
NOS150/400-45-4-12	225M	45	1450	N9	H140	150	200	3-400	110	1595	765	1870	438	888	350	140	1840	320	730	670	29	824
NOS150/400-55-4-12	250M	55	1450	N9	H160	150	200	3-400	110	1614	784	1870	438	888	350	140	1840	320	730	670	29	855
NOS150/400-75-4-12	280S	75	1450	N9	H180	150	200	3-400	110	1901	1071	1870	438	888	350	140	1840	320	730	670	29	1213
NOS150/400-90-4-12	280M	90	1450	N9	H180	150	200	3-400	110	1901	1071	1870	438	888	350	140	1840	320	730	670	29	1248

DIMENSIONS – FLANGES

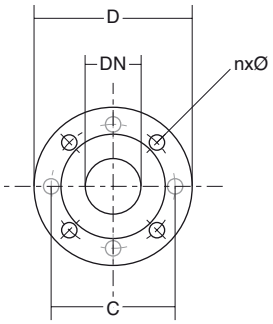

Flange connection to DIN 2501 PN 16									
DN	32	40	50	65	80	100	125	150	200
D	140	150	165	185	200	220	250	285	340
C	100	110	125	145	160	180	210	240	295
nxØ	4x18	4x18	4x18	4x18	8x18	8x18	8x18	8x22	12x22

NOS

DIMENSIONS – GROUPS – 1450 MIN -1 WITHOUT SPACER

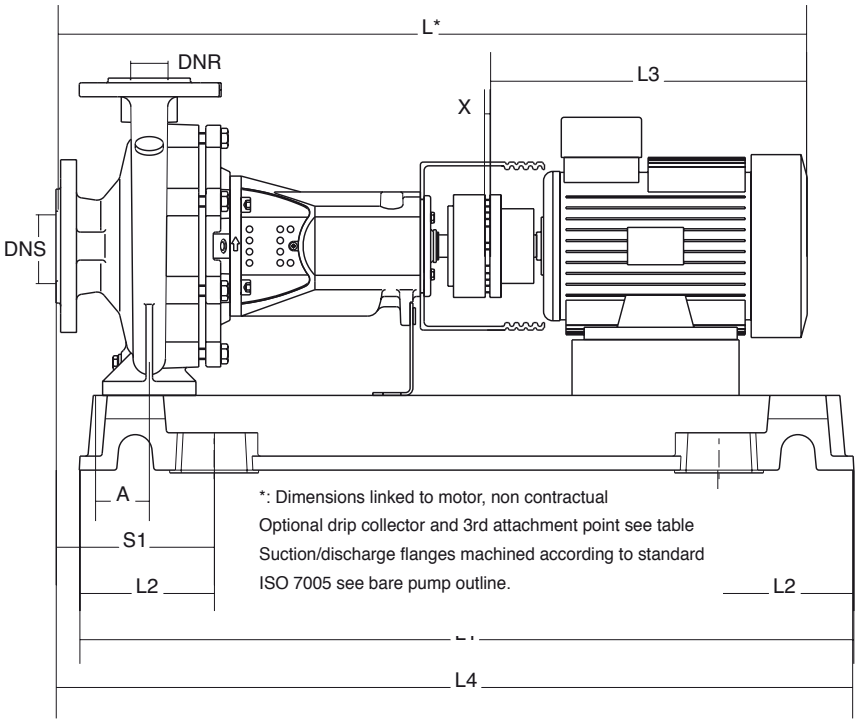

*: Dimensions linked to motor, non contractual
Optional drip collector and 3rd attachment point see table
Suction/discharge flanges machined according to standard
ISO 7005 see bare pump outline.

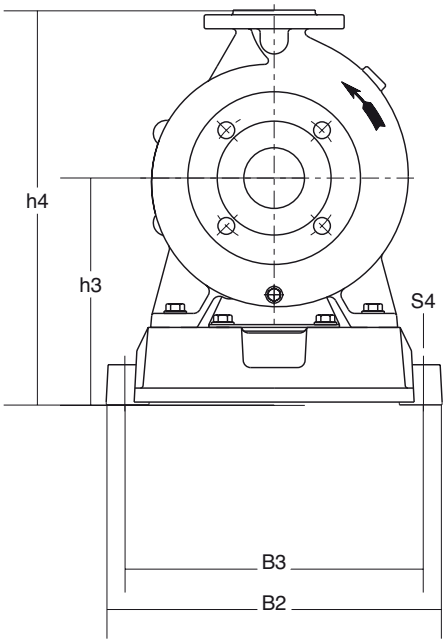

DIMENSIONS – GROUPS – 1450 MIN -1 WITHOUT SPACER

									Unit								Base plate					
TYPE	Motor housing type	Kw	min-1	Base Plate	Type Coupling	DNR	DNS	Voltage	A	L	L3	L4	h3	h4	S1	X	L1	L2	B2	B3	S4	Net Mass
		kW						V	mm	mm	mm	mm	mm	mm	mm	mm	mm	mm	mm	mm	mm	kg
NOS32/125-0.37-4-05	71	0,37	1450	N2	B68	32	50	3-230-400	60	695,5	252,5	835	195	335	150	3	830	145	360	320	19	83
NOS32/160-0.37-4-05	71	0,37	1450	N2	B68	32	50	3-230-400	60	695,5	252,5	835	215	375	150	3	830	145	360	320	19	95
NOS32/160-0.55-4-05	80	0,55	1450	N2	B68	32	50	3-230-400	60	726,5	283,5	835	215	375	150	3	830	145	360	320	19	88
NOS32/160-0.75-4-05	80	0,75	1450	N2	B68	32	50	3-230-400	60	726,5	283,5	835	215	375	150	3	830	145	360	320	19	92
NOS32/160B-0.37-4-05	71	0,37	1450	N2	B68	32	50	3-230-400	60	695,5	252,5	835	215	375	150	3	830	145	360	320	19	95
NOS32/160B-0.55-4-05	80	0,55	1450	N2	B68	32	50	3-230-400	60	726,5	283,5	835	215	375	150	3	830	145	360	320	19	88
NOS32/160B-0.75-4-05	80	0,75	1450	N2	B68	32	50	3-230-400	60	726,5	283,5	835	215	375	150	3	830	145	360	320	19	92
NOS32/200-0.55-4-05	80	0,55	1450	N2	B68	32	50	3-230-400	60	726,5	283,5	835	243	423	150	3	830	145	360	320	19	90
NOS32/200-0.75-4-05	80	0,75	1450	N2	B68	32	50	3-230-400	60	726,5	283,5	835	243	423	150	3	830	145	360	320	19	94
NOS32/200-1.1-4-05	90S	1,1	1450	N2	B68	32	50	3-230-400	60	739,5	296,5	835	243	423	150	3	830	145	360	320	19	104
NOS32/200-1.5-4-05	90L	1,5	1450	N2	B68	32	50	3-230-400	60	759,5	316,5	835	243	423	150	3	830	145	360	320	19	105
NOS32/200B-0.55-4-05	80	0,55	1450	N2	B68	32	50	3-230-400	60	726,5	283,5	835	243	423	150	3	830	145	360	320	19	90
NOS32/200B-0.75-4-05	80	0,75	1450	N2	B68	32	50	3-230-400	60	726,5	283,5	835	243	423	150	3	830	145	360	320	19	94
NOS32/200B-1.1-4-05	90S	1,1	1450	N2	B68	32	50	3-230-400	60	739,5	296,5	835	243	423	150	3	830	145	360	320	19	104
NOS32/200B-1.5-4-05	90L	1,5	1450	N2	B68	32	50	3-230-400	60	759,5	316,5	835	243	423	150	3	830	145	360	320	19	105
NOS32/250-0.75-4-05	80	0,75	1450	N4	B68	32	50	3-230-400	72,5	746,5	283,5	1042,5	283	508	197,5	3	1030	185	450	400	24	139
NOS32/250-1.1-4-05	90S	1,1	1450	N4	B68	32	50	3-230-400	72,5	759,5	296,5	1042,5	283	508	197,5	3	1030	185	450	400	24	144
NOS32/250-1.5-4-05	90L	1,5	1450	N4	B68	32	50	3-230-400	72,5	779,5	316,5	1042,5	283	508	197,5	3	1030	185	450	400	24	144
NOS32/250-2.2-4-05	100L	2,2	1450	N4	B80	32	50	3-230-400	72,5	815	352	1042,5	283	508	197,5	3	1030	185	450	400	24	151
NOS40/125-0.37-4-05	71	0,37	1450	N2	B68	40	65	3-230-400	60	695,5	252,5	835	195	335	150	3	830	145	360	320	19	80
NOS40/125-0.55-4-05	80	0,55	1450	N2	B68	40	65	3-230-400	60	726,5	283,5	835	195	335	150	3	830	145	360	320	19	82
NOS40/160-0.37-4-05	71	0,37	1450	N2	B68	40	65	3-230-400	60	695,5	252,5	835	215	375	150	3	830	145	360	320	19	92
NOS40/160-0.55-4-05	80	0,55	1450	N2	B68	40	65	3-230-400	60	726,5	283,5	835	215	375	150	3	830	145	360	320	19	85

DIMENSIONS – GROUPS – 1450 MIN -1 WITHOUT SPACER

									Unit									Base plate					
TYPE	Motor housing type	Kw	min-1	Base Plate	Type Coupling	DNR	DNS	Voltage	A	L	L3	L4	h3	h4	S1	X	L1	L2	B2	B3	S4	Net Mass
		kW						V	mm	mm	mm	mm	mm	mm	mm	mm	mm	mm	mm	mm	mm	kg
NOS40/160-0.75-4-05	80	0,75	1450	N2	B68	40	65	3-230-400	60	726,5	283,5	835	215	375	150	3	830	145	360	320	19	89
NOS40/160-1.1-4-05	90S	1,1	1450	N2	B68	40	65	3-230-400	60	739,5	296,5	835	215	375	150	3	830	145	360	320	19	93
NOS40/160-1.5-4-05	90L	1,5	1450	N2	B68	40	65	3-230-400	60	759,5	316,5	835	215	375	150	3	830	145	360	320	19	94
NOS40/200-0.55-4-05	80	0,55	1450	N3	B68	40	65	3-230-400	60	746,5	283,5	955	243	423	190	3	930	165	390	350	19	103
NOS40/200-0.75-4-05	80	0,75	1450	N3	B68	40	65	3-230-400	60	746,5	283,5	955	243	423	190	3	930	165	390	350	19	106
NOS40/200-1.1-4-05	90S	1,1	1450	N3	B68	40	65	3-230-400	60	759,5	296,5	955	243	423	190	3	930	165	390	350	19	116
NOS40/200-1.5-4-05	90L	1,5	1450	N3	B68	40	65	3-230-400	60	779,5	316,5	955	243	423	190	3	930	165	390	350	19	117
NOS40/200-2.2-4-05	100L	2,2	1450	N3	B80	40	65	3-230-400	60	815	352	955	243	423	190	3	930	165	390	350	19	124
NOS40/250-1.1-4-05	90S	1,1	1450	N4	B68	40	65	3-230-400	72,5	759,5	296,5	1042,5	283	508	197,5	3	1030	185	450	400	24	144
NOS40/250-1.5-4-05	90L	1,5	1450	N4	B68	40	65	3-230-400	72,5	779,5	316,5	1042,5	283	508	197,5	3	1030	185	450	400	24	144
NOS40/250-2.2-4-05	100L	2,2	1450	N4	B80	40	65	3-230-400	72,5	815	352	1042,5	283	508	197,5	3	1030	185	450	400	24	151
NOS40/250-3-4-05	100L	3	1450	N4	B80	40	65	3-230-400	72,5	815	352	1042,5	283	508	197,5	3	1030	185	450	400	24	152
NOS40/315-2.2-4-05	100L	2,2	1450	N5	B95	40	65	3-230-400	72,5	950	352	1187,5	328	578	242,5	3	1150	205	490	440	24	216
NOS40/315-3-4-05	100L	3	1450	N5	B95	40	65	3-230-400	72,5	950	352	1187,5	328	578	242,5	3	1150	205	490	440	24	217
NOS40/315-4-4-05	112M	4	1450	N5	B95	40	65	3-230-400	72,5	993,5	395,5	1187,5	328	578	242,5	3	1150	205	490	440	24	226
NOS40/315-5.5-4-05	123S	5,5	1450	N5	B95	40	65	3-400	72,5	1038,5	440,5	1187,5	328	578	242,5	3	1150	205	490	440	24	246
NOS50/125-0.37-4-05	71	0,37	1450	N2	B68	50	65	3-230-400	60	715,5	252,5	855	215	375	170	3	830	145	360	320	19	92
NOS50/125-0.55-4-05	80	0,55	1450	N2	B68	50	65	3-230-400	60	746,5	283,5	855	215	375	170	3	830	145	360	320	19	85
NOS50/125-0.75-4-05	80	0,75	1450	N2	B68	50	65	3-230-400	60	746,5	283,5	855	215	375	170	3	830	145	360	320	19	89
NOS50/160-0.55-4-05	80	0,55	1450	N3	B68	50	65	3-230-400	60	746,5	283,5	955	243	423	190	3	930	165	390	350	19	103
NOS50/160-0.75-4-05	80	0,75	1450	N3	B68	50	65	3-230-400	60	746,5	283,5	955	243	423	190	3	930	165	390	350	19	106
NOS50/160-1.1-4-05	90S	1,1	1450	N3	B68	50	65	3-230-400	60	759,5	296,5	955	243	423	190	3	930	165	390	350	19	116
NOS50/160-1.5-4-05	90L	1,5	1450	N3	B68	50	65	3-230-400	60	779,5	316,5	955	243	423	190	3	930	165	390	350	19	117
NOS50/160-2.2-4-05	100L	2,2	1450	N3	B80	50	65	3-230-400	60	815	352	955	243	423	190	3	930	165	390	350	19	124
NOS50/200-1.1-4-05	90S	1,1	1450	N3	B68	50	65	3-230-400	60	759,5	296,5	955	243	443	190	3	930	165	390	350	19	121
NOS50/200-1.5-4-05	90L	1,5	1450	N3	B68	50	65	3-230-400	60	779,5	316,5	955	243	443	190	3	930	165	390	350	19	121
NOS50/200-2.2-4-05	100L	2,2	1450	N3	B80	50	65	3-230-400	60	815	352	955	243	443	190	3	930	165	390	350	19	128
NOS50/200-3-4-05	100L	3	1450	N3	B80	50	65	3-230-400	60	815	352	955	243	443	190	3	930	165	390	350	19	129
NOS50/250-1.5-4-05	90L	1,5	1450	N4	B68	50	65	3-230-400	72,5	779,5	316,5	1042,5	283	508	197,5	3	1030	185	450	400	24	148
NOS50/250-2.2-4-05	100L	2,2	1450	N4	B80	50	65	3-230-400	72,5	815	352	1042,5	283	508	197,5	3	1030	185	450	400	24	155
NOS50/250-3-4-05	100L	3	1450	N4	B80	50	65	3-230-400	72,5	815	352	1042,5	283	508	197,5	3	1030	185	450	400	24	156
NOS50/250-4-4-05	112M	4	1450	N4	B80	50	65	3-230-400	72,5	858,5	395,5	1042,5	283	508	197,5	3	1030	185	450	400	24	161
NOS50/315-4-4-05	112M	4	1450	N5	B95	50	65	3-230-400	72,5	993,5	395,5	1187,5	328	608	242,5	3	1150	205	490	440	24	241
NOS50/315-5.5-4-05	123S	5,5	1450	N5	B95	50	65	3-400	72,5	1038,5	440,5	1187,5	328	608	242,5	3	1150	205	490	440	24	262
NOS50/315-7.5-4-05	132M	7,5	1450	N5	B95	50	65	3-400	72,5	1073,5	475,5	1187,5	328	608	242,5	3	1150	205	490	440	24	264
NOS50/315-9-4-05	132M	9	1450	N5	B95	50	65	3-400	72,5	1073,5	475,5	1187,5	328	608	242,5	3	1150	205	490	440	24	276
NOS65/125-0.55-4-05	80	0,55	1450	N3	B68	65	80	3-230-400	72,5	746,5	283,5	942,5	243	423	177,5	3	930	165	390	350	19	100
NOS65/125-0.75-4-05	80	0,75	1450	N3	B68	65	80	3-230-400	72,5	746,5	283,5	942,5	243	423	177,5	3	930	165	390	350	19	103
NOS65/125-1.1-4-05	90S	1,1	1450	N3	B68	65	80	3-230-400	72,5	759,5	296,5	942,5	243	423	177,5	3	930	165	390	350	19	113
NOS65/160-0.75-4-05	80	0,75	1450	N3	B68	65	80	3-230-400	72,5	746,5	283,5	942,5	243	443	177,5	3	930	165	390	350	19	109
NOS65/160-1.5-4-05	90L	1,5	1450	N3	B68	65	80	3-230-400	72,5	779,5	316,5	942,5	243	443	177,5	3	930	165	390	350	19	120
NOS65/160-2.2-4-05	100L	2,2	1450	N3	B80	65	80	3-230-400	72,5	815	352	942,5	243	443	177,5	3	930	165	390	350	19	127
NOS65/200-1.1-4-05	90S	1,1	1450	N4	B68	65	80	3-230-400	72,5	759,5	296,5	1042,5	283	508	197,5	3	1030	185	450	400	24	143
NOS65/200-1.5-4-05	90L	1,5	1450	N4	B68	65	80	3-230-400	72,5	779,5	316,5	1042,5	283	508	197,5	3	1030	185	450	400	24	143
NOS65/200-2.2-4-05	100L	2,2	1450	N4	B80	65	80	3-230-400	72,5	815	352	1042,5	283	508	197,5	3	1030	185	450	400	24	150
NOS65/200-3-4-05	100L	3	1450	N4	B80	65	80	3-230-400	72,5	815	352	1042,5	283	508	197,5	3	1030	185	450	400	24	151
NOS65/200-4-4-05	112M	4	1450	N4	B80	65	80	3-230-400	72,5	858,5	395,5	1042,5	283	508	197,5	3	1030	185	450	400	24	156
NOS65/250-2.2-4-05	100L	2,2	1450	N5	B95	65	80	3-230-400	90	925	352	1145	303	553	200	3	1150	205	490	440	24	211
NOS65/250-3-4-05	100L	3	1450	N5	B95	65	80	3-230-400	90	925	352	1145	303	553	200	3	1150	205	490	440	24	212
NOS65/250-4-4-05	112M	4	1450	N5	B95	65	80	3-230-400	90	968,5	395,5	1145	303	553	200	3	1150	205	490	440	24	220
NOS65/250-5.5-4-05	123S	5,5	1450	N5	B95	65	80	3-400	90	1013,5	440,5	1145	303	553	200	3	1150	205	490	440	24	238
NOS65/315-5.5-4-05	123S	5,5	1450	N6	B95	65	80	3-400	90	1038,5	440,5	1305	328	608	240	3	1290	225	540	490	24	297
NOS65/315-7.5-4-05	132M	7,5	1450	N6	B95	65	80	3-400	90	1073,5	475,5	1305	328	608	240	3	1290	225	540	490	24	299

NOS

DIMENSIONS – GROUPS – 1450 MIN -1 WITHOUT SPACER

									Unit								Base plate					
TYPE	Motor housing type	Kw	min-1	Base Plate	Type Coupling	DNR	DNS	Voltage	A	L	L3	L4	h3	h4	S1	X	L1	L2	B2	B3	S4	Net Mass
		kW						V	mm	mm	mm	mm	mm	mm	mm	mm	mm	mm	mm	mm	mm	kg
NOS65/315-9-4-05	132M	9	1450	N6	B95	65	80	3-400	90	1073,5	475,5	1305	328	608	240	3	1290	225	540	490	24	311
NOS65/315-11-4-05	160M	11	1450	N6	B95	65	80	3-400	90	1184	586	1305	328	608	240	3	1290	225	540	490	24	319
NOS65/315-15-4-05	160L	15	1450	N6	B110	65	80	3-400	90	1184	586	1305	328	608	240	3	1290	225	540	490	24	335
NOS80/160-1.1-4-05	90S	1,1	1450	N4	B68	80	100	3-230-400	72,5	784,5	296,5	1067,5	283	508	222,5	3	1030	185	450	400	24	141
NOS80/160-1.5-4-05	90L	1,5	1450	N4	B68	80	100	3-230-400	72,5	804,5	316,5	1067,5	283	508	222,5	3	1030	185	450	400	24	141
NOS80/160-2.2-4-05	100L	2,2	1450	N4	B80	80	100	3-230-400	72,5	840	352	1067,5	283	508	222,5	3	1030	185	450	400	24	148
NOS80/160-3-4-05	100L	3	1450	N4	B80	80	100	3-230-400	72,5	840	352	1067,5	283	508	222,5	3	1030	185	450	400	24	149
NOS80/160-4-4-05	112M	4	1450	N4	B80	80	100	3-230-400	72,5	883,5	395,5	1067,5	283	508	222,5	3	1030	185	450	400	24	154
NOS80/200-1.5-4-05	90L	1,5	1450	N5	B95	80	100	3-230-400	72,5	914,5	316,5	1187,5	283	533	242,5	3	1150	205	490	440	24	193
NOS80/200-2.2-4-05	100L	2,2	1450	N5	B95	80	100	3-230-400	72,5	950	352	1187,5	283	533	242,5	3	1150	205	490	440	24	199
NOS80/200-3-4-05	100L	3	1450	N5	B95	80	100	3-230-400	72,5	950	352	1187,5	283	533	242,5	3	1150	205	490	440	24	200
NOS80/200-4-4-05	112M	4	1450	N5	B95	80	100	3-230-400	72,5	993,5	395,5	1187,5	283	533	242,5	3	1150	205	490	440	24	205
NOS80/200-5.5-4-05	123S	5,5	1450	N5	B95	80	100	3-400	72,5	1038,5	440,5	1187,5	283	533	242,5	3	1150	205	490	440	24	225
NOS80/250-3-4-05	100L	3	1450	N6	B95	80	100	3-230-400	90	950	352	1305	303	583	240	3	1290	225	540	490	24	248
NOS80/250-4-4-05	112M	4	1450	N6	B95	80	100	3-230-400	90	993,5	395,5	1305	303	583	240	3	1290	225	540	490	24	256
NOS80/250-5.5-4-05	123S	5,5	1450	N6	B95	80	100	3-400	90	1038,5	440,5	1305	303	583	240	3	1290	225	540	490	24	274
NOS80/250-7.5-4-05	132M	7,5	1450	N6	B95	80	100	3-400	90	1073,5	475,5	1305	303	583	240	3	1290	225	540	490	24	276
NOS80/315-5.5-4-05	123S	5,5	1450	N6	B95	80	100	3-400	90	1038,5	440,5	1305	353	668	240	3	1290	225	540	490	24	302
NOS80/315-7.5-4-05	132M	7,5	1450	N6	B95	80	100	3-400	90	1073,5	475,5	1305	353	668	240	3	1290	225	540	490	24	305
NOS80/315-9-4-05	132M	9	1450	N6	B95	80	100	3-400	90	1073,5	475,5	1305	353	668	240	3	1290	225	540	490	24	317
NOS80/315-11-4-05	160M	11	1450	N6	B95	80	100	3-400	90	1184	586	1305	353	668	240	3	1290	225	540	490	24	328
NOS80/315-15-4-05	160L	15	1450	N6	B110	80	100	3-400	90	1184	586	1305	353	668	240	3	1290	225	540	490	24	344
NOS80/400-11-4-05	160M	11	1450	N7	B95	80	125	3-400	90	1244	586	1455	383	738	265	3	1440	250	610	550	29	441
NOS80/400-15-4-05	160L	15	1450	N7	B110	80	125	3-400	90	1244	586	1455	383	738	265	3	1440	250	610	550	29	458
NOS80/400-18.5-4-05	180M	18,5	1450	N7	B110	80	125	3-400	90	1287	629	1455	383	738	265	3	1440	250	610	550	29	482
NOS80/400-22-4-05	180L	22	1450	N7	B125	80	125	3-400	90	1287	629	1455	383	738	265	3	1440	250	610	550	29	500
NOS80/400-30-4-05	200L	30	1450	N7	B125	80	125	3-400	90	1323	665	1455	383	738	265	3	1440	250	610	550	29	532
NOS100/160-2.2-4-05	100L	2,2	1450	N5	B95	100	125	3-230-400	90	950	352	1170	303	583	225	3	1150	205	490	440	24	220
NOS100/160-3-4-05	100L	3	1450	N5	B95	100	125	3-230-400	90	950	352	1170	303	583	225	3	1150	205	490	440	24	221
NOS100/160-4-4-05	112M	4	1450	N5	B95	100	125	3-230-400	90	993,5	395,5	1170	303	583	225	3	1150	205	490	440	24	228
NOS100/160-5.5-4-05	123S	5,5	1450	N5	B95	100	125	3-400	90	1038,5	440,5	1170	303	583	225	3	1150	205	490	440	24	246
NOS100/200-2.2-4-05	100L	2,2	1450	N5	B95	100	125	3-230-400	90	950	352	1170	303	583	225	3	1150	205	490	440	24	211
NOS100/200-3-4-05	100L	3	1450	N5	B95	100	125	3-230-400	90	950	352	1170	303	583	225	3	1150	205	490	440	24	212
NOS100/200-4-4-05	112M	4	1450	N5	B95	100	125	3-230-400	90	993,5	395,5	1170	303	583	225	3	1150	205	490	440	24	220
NOS100/200-5.5-4-05	123S	5,5	1450	N5	B95	100	125	3-400	90	1038,5	440,5	1170	303	583	225	3	1150	205	490	440	24	238
NOS100/200-7.5-4-05	132M	7,5	1450	N5	B95	100	125	3-400	90	1073,5	475,5	1170	303	583	225	3	1150	205	490	440	24	240
NOS100/250-4-4-05	112M	4	1450	N6	B95	100	125	3-230-400	90	1008,5	395,5	1320	328	608	255	3	1290	225	540	490	24	269
NOS100/250-5.5-4-05	123S	5,5	1450	N6	B95	100	125	3-400	90	1053,5	440,5	1320	328	608	255	3	1290	225	540	490	24	290
NOS100/250-7.5-4-05	132M	7,5	1450	N6	B95	100	125	3-400	90	1088,5	475,5	1320	328	608	255	3	1290	225	540	490	24	292
NOS100/250-9-4-05	132M	9	1450	N6	B95	100	125	3-400	90	1088,5	475,5	1320	328	608	255	3	1290	225	540	490	24	304
NOS100/250-11-4-05	160M	11	1450	N6	B95	100	125	3-400	90	1199	586	1320	328	608	255	3	1290	225	540	490	24	311
NOS100/315-11-4-05	160M	11	1450	N6	B95	100	125	3-400	90	1199	586	1320	353	668	255	3	1290	225	540	490	24	337
NOS100/315-15-4-05	160L	15	1450	N6	B110	100	125	3-400	90	1199	586	1320	353	668	255	3	1290	225	540	490	24	354
NOS100/315-18.5-4-05	180M	18,5	1450	N6	B110	100	125	3-400	90	1242	629	1320	353	668	255	3	1290	225	540	490	24	378
NOS100/315-22-4-05	180L	22	1450	N6	B125	100	125	3-400	90	1242	629	1320	353	668	255	3	1290	225	540	490	24	395
NOS100/400-15-4-05	160L	15	1450	N8	B110	100	125	3-400	110	1259	586	1650	403	758	300	3	1640	290	660	600	29	511
NOS100/400-18.5-4-05	180M	18,5	1450	N8	B110	100	125	3-400	110	1302	629	1650	403	758	300	3	1640	290	660	600	29	535
NOS100/400-22-4-05	180L	22	1450	N8	B125	100	125	3-400	110	1302	629	1650	403	758	300	3	1640	290	660	600	29	553
NOS100/400-30-4-05	200L	30	1450	N8	B125	100	125	3-400	110	1338	665	1650	403	758	300	3	1640	290	660	600	29	584
NOS100/400-37-4-05	225S	37	1450	N8	B140	100	125	3-400	110	1438	765	1650	403	758	300	3	1640	290	660	600	29	638
NOS100/400-45-4-05	225M	45	1450	N8	B140	100	125	3-400	110	1438	765	1650	403	758	300	3	1640	290	660	600	29	672
NOS125/200-7.5-4-05	132M	7,5	1450	N6	B95	125	150	3-400	90	1088,5	475,5	1320	353	668	255	3	1290	225	540	490	24	310
NOS125/200-9-4-05	132M	9	1450	N6	B95	125	150	3-400	90	1088,5	475,5	1320	353	668	255	3	1290	225	540	490	24	322

DIMENSIONS – GROUPS – 1450 MIN -1 WITHOUT SPACER

									Unit									Base plate					
TYPE	Motor housing type	Kw	min-1	Base Plate	Type Coupling	DNR	DNS	Voltage	A	L	L3	L4	h3	h4	S1	X	L1	L2	B2	B3	S4	Net Mass
		kW						V	mm	mm	mm	mm	mm	mm	mm	mm	mm	mm	mm	mm	mm	kg
NOS125/200-11-4-05	160M	11	1450	N6	B95	125	150	3-400	90	1199	586	1320	353	668	255	3	1290	225	540	490	24	333
NOS125/200-15-4-05	160L	15	1450	N6	B110	125	150	3-400	90	1199	586	1320	353	668	255	3	1290	225	540	490	24	350
NOS125/250-7.5-4-05	132M	7,5	1450	N6	B95	125	150	3-400	90	1088,5	475,5	1320	353	708	255	3	1290	225	540	490	24	312
NOS125/250-9-4-05	132M	9	1450	N6	B95	125	150	3-400	90	1088,5	475,5	1320	353	708	255	3	1290	225	540	490	24	324
NOS125/250-11-4-05	160M	11	1450	N6	B95	125	150	3-400	90	1199	586	1320	353	708	255	3	1290	225	540	490	24	335
NOS125/250-15-4-05	160L	15	1450	N6	B110	125	150	3-400	90	1199	586	1320	353	708	255	3	1290	225	540	490	24	352
NOS125/250-18.5-4-05	180M	18,5	1450	N6	B110	125	150	3-400	90	1242	629	1320	353	708	255	3	1290	225	540	490	24	376
NOS125/315-15-4-05	160L	15	1450	N8	B110	125	150	3-400	110	1259	586	1650	403	758	300	3	1640	290	660	600	29	489
NOS125/315-18.5-4-05	180M	18,5	1450	N8	B110	125	150	3-400	110	1302	629	1650	403	758	300	3	1640	290	660	600	29	513
NOS125/315-22-4-05	180L	22	1450	N8	B125	125	150	3-400	110	1302	629	1650	403	758	300	3	1640	290	660	600	29	531
NOS125/315-30-4-05	200L	30	1450	N8	B125	125	150	3-400	110	1338	665	1650	403	758	300	3	1640	290	660	600	29	562
NOS125/315-37-4-05	225S	37	1450	N8	B140	125	150	3-400	110	1438	765	1650	403	758	300	3	1640	290	660	600	29	617
NOS125/400-30-4-05	200L	30	1450	N8	B125	125	150	3-400	110	1338	665	1650	438	838	300	3	1640	290	660	600	29	606
NOS125/400-37-4-05	225S	37	1450	N8	B140	125	150	3-400	110	1438	765	1650	438	838	300	3	1640	290	660	600	29	660
NOS125/400-45-4-05	225M	45	1450	N8	B140	125	150	3-400	110	1438	765	1650	438	838	300	3	1640	290	660	600	29	694
NOS125/400-55-4-05	250M	55	1450	N8	B160	125	150	3-400	110	1457	784	1650	438	838	300	3	1640	290	660	600	29	725
NOS125/400-75-4-05	280S	75	1450	N9	B180	125	150	3-400	110	1744	1071	1850	438	838	330	3	1840	320	730	670	29	1175
NOS150/200-7.5-4-05	132M	7,5	1450	N9	B95	150	200	3-400	110	1108,5	475,5	1870	403	803	350	3	1840	320	730	670	29	517
NOS150/200-9-4-05	132M	9	1450	N9	B95	150	200	3-400	110	1108,5	475,5	1870	403	803	350	3	1840	320	730	670	29	530
NOS150/200-11-4-05	160M	11	1450	N9	B95	150	200	3-400	110	1219	586	1870	403	803	350	3	1840	320	730	670	29	543
NOS150/200-15-4-05	160L	15	1450	N9	B110	150	200	3-400	110	1219	586	1870	403	803	350	3	1840	320	730	670	29	560
NOS150/200-18.5-4-05	180M	18,5	1450	N9	B110	150	200	3-400	110	1262	629	1870	403	803	350	3	1840	320	730	670	29	584
NOS150/250-15-4-05	160L	15	1450	N8	B110	150	200	3-400	110	1219	586	1670	403	803	320	3	1640	290	660	600	29	472
NOS150/250-18.5-4-05	180M	18,5	1450	N8	B110	150	200	3-400	110	1262	629	1670	403	803	320	3	1640	290	660	600	29	496
NOS150/250-22-4-05	180L	22	1450	N8	B125	150	200	3-400	110	1262	629	1670	403	803	320	3	1640	290	660	600	29	514
NOS150/250-30-4-05	200L	30	1450	N8	B125	150	200	3-400	110	1298	665	1670	403	803	320	3	1640	290	660	600	29	545
NOS150/315-22-4-05	180L	22	1450	N9	B125	150	200	3-400	110	1322	629	1870	403	803	350	3	1840	320	730	670	29	639
NOS150/315-30-4-05	200L	30	1450	N9	B125	150	200	3-400	110	1358	665	1870	403	803	350	3	1840	320	730	670	29	671
NOS150/315-37-4-05	225S	37	1450	N9	B140	150	200	3-400	110	1458	765	1870	403	803	350	3	1840	320	730	670	29	725
NOS150/315-45-4-05	225M	45	1450	N9	B140	150	200	3-400	110	1458	765	1870	403	803	350	3	1840	320	730	670	29	759
NOS150/315-55-4-05	250M	55	1450	N9	B160	150	200	3-400	110	1477	784	1870	403	803	350	3	1840	320	730	670	29	790
NOS150/400-45-4-05	225M	45	1450	N9	B140	150	200	3-400	110	1458	765	1870	438	888	350	3	1840	320	730	670	29	819
NOS150/400-55-4-05	250M	55	1450	N9	B160	150	200	3-400	110	1477	784	1870	438	888	350	3	1840	320	730	670	29	849
NOS150/400-75-4-05	280S	75	1450	N9	B180	150	200	3-400	110	1764	1071	1870	438	888	350	3	1840	320	730	670	29	1206
NOS150/400-90-4-05	280M	90	1450	N9	B180	150	200	3-400	110	1764	1071	1870	438	888	350	3	1840	320	730	670	29	1241

NOS

DIMENSIONS – UNITS – 2900 MIN -1 WITH SPACER

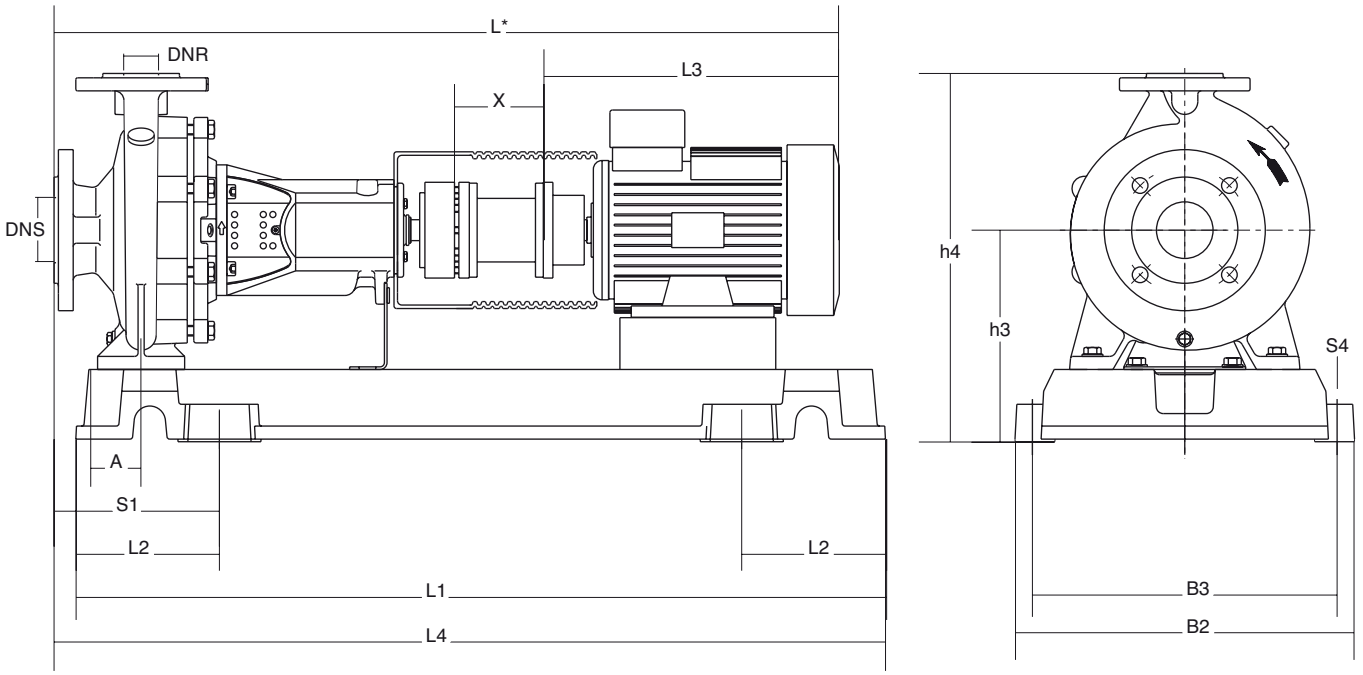

* :Dimensions linked to motor, non contractual

Optional drip collector and 3rd attachment point see table

Suction/discharge flanges machined according to standard ISO 7005 see bare pump outline.

DIMENSIONS – UNITS – 2900 MIN -1 WITH SPACER

									Unit								Base plate					
TYPE	Motor housing type	Kw	min-1	Base Plate	Type Coupling	DNR	DNS	Voltage	A	L	L3	L4	h3	h4	S1	X	L1	L2	B2	B3	S4	Net Mass
								V	mm	mm	mm	mm	mm	mm	mm	mm	mm	mm	mm	mm	mm	kg
NOS32/125-0.55-2-12	71	0,55	2900	N2	H80	32	50	3-230-400	60	792,5	252,5	835	195	335	150	100	830	145	360	320	19	85
NOS32/125-0.75-2-12	80	0,75	2900	N2	H80	32	50	3-230-400	60	823,5	283,5	835	195	335	150	100	830	145	360	320	19	89
NOS32/125-1.1-2-12	80	1,1	2900	N2	H80	32	50	3-230-400	60	823,5	283,5	835	195	335	150	100	830	145	360	320	19	92
NOS32/125-1.5-2-12	90S	1,5	2900	N2	H80	32	50	3-230-400	60	836,5	296,5	835	195	335	150	100	830	145	360	320	19	96
NOS32/125-2.2-2-12	90L	2,2	2900	N3	H80	32	50	3-230-400	60	856,5	316,5	935	195	335	170	100	930	165	390	350	19	107
NOS32/160-1.5-2-12	90S	1,5	2900	N2	H80	32	50	3-230-400	60	836,5	296,5	835	215	375	150	100	830	145	360	320	19	99
NOS32/160-2.2-2-12	90L	2,2	2900	N3	H80	32	50	3-230-400	60	856,5	316,5	935	215	375	170	100	930	165	390	350	19	109
NOS32/160-3-2-12	100L	3	2900	N3	H80	32	50	3-230-400	60	892	352	935	215	375	170	100	930	165	390	350	19	118
NOS32/160-4-2-12	112M	4	2900	N3	H80	32	50	3-230-400	60	935,5	395,5	935	215	375	170	100	930	165	390	350	19	123
NOS32/160-5.5-2-12	132S	5,5	2900	N3	H95	32	50	3-400	60	980,5	440,5	935	215	375	170	100	930	165	390	350	19	138
NOS32/160B-1.5-2-12	90S	1,5	2900	N2	H80	32	50	3-230-400	60	836,5	296,5	835	215	375	150	100	830	145	360	320	19	99
NOS32/160B-2.2-2-12	90L	2,2	2900	N3	H80	32	50	3-230-400	60	856,5	316,5	935	215	375	170	100	930	165	390	350	19	109
NOS32/160B-3-2-12	100L	3	2900	N3	H80	32	50	3-230-400	60	892	352	935	215	375	170	100	930	165	390	350	19	118
NOS32/160B-4-2-12	112M	4	2900	N3	H80	32	50	3-230-400	60	935,5	395,5	935	215	375	170	100	930	165	390	350	19	123
NOS32/160B-5.5-2-12	132S	5,5	2900	N3	H95	32	50	3-400	60	980,5	440,5	935	215	375	170	100	930	165	390	350	19	138
NOS32/200-2.2-2-12	90L	2,2	2900	N3	H80	32	50	3-230-400	60	856,5	316,5	935	243	423	170	100	930	165	390	350	19	117
NOS32/200-3-2-12	100L	3	2900	N3	H80	32	50	3-230-400	60	892	352	935	243	423	170	100	930	165	390	350	19	124
NOS32/200-4-2-12	112M	4	2900	N3	H80	32	50	3-230-400	60	935,5	395,5	935	243	423	170	100	930	165	390	350	19	127

DIMENSIONS – UNITS – 2900 MIN -1 WITH SPACER

									Unit								Base plate					
TYPE	Motor housing type	Kw	min-1	Base Plate	Type Coupling	DNR	DNS	Voltage	A	L	L3	L4	h3	h4	S1	X	L1	L2	B2	B3	S4	Net Mass
								V	mm	mm	mm	mm	mm	mm	mm	mm	mm	mm	mm	mm	mm	kg
NOS32/200-5.5-2-12	132S	5,5	2900	N3	H95	32	50	3-400	60	980,5	440,5	935	243	423	170	100	930	165	390	350	19	143
NOS32/200-7.5-2-12	132S	7,5	2900	N3	H95	32	50	3-400	60	980,5	440,5	935	243	423	170	100	930	165	390	350	19	149
NOS32/200-9-2-12	132M	9	2900	N3	H95	32	50	3-400	60	1015,5	475,5	935	243	423	170	100	930	165	390	350	19	148
NOS32/200-11-2-12	160M	11	2900	N4	H95	32	50	3-400	60	1126	586	1035	263	443	190	100	1030	185	450	400	24	175
NOS32/200B-2.2-2-12	90L	2,2	2900	N3	H80	32	50	3-230-400	60	856,5	316,5	935	243	423	170	100	930	165	390	350	19	117
NOS32/200B-3-2-12	100L	3	2900	N3	H80	32	50	3-230-400	60	892	352	935	243	423	170	100	930	165	390	350	19	124
NOS32/200B-4-2-12	112M	4	2900	N3	H80	32	50	3-230-400	60	935,5	395,5	935	243	423	170	100	930	165	390	350	19	127
NOS32/200B-5.5-2-12	132S	5,5	2900	N3	H95	32	50	3-400	60	980,5	440,5	935	243	423	170	100	930	165	390	350	19	143
NOS32/200B-7.5-2-12	132S	7,5	2900	N3	H95	32	50	3-400	60	980,5	440,5	935	243	423	170	100	930	165	390	350	19	149
NOS32/200B-9-2-12	132M	9	2900	N3	H95	32	50	3-400	60	1015,5	475,5	935	243	423	170	100	930	165	390	350	19	148
NOS32/200B-11-2-12	160M	11	2900	N4	H95	32	50	3-400	60	1126	586	1035	263	443	190	100	1030	185	450	400	24	175
NOS32/250-7.5-2-12	132S	7,5	2900	N4	H95	32	50	3-400	72,5	1000,5	440,5	1042,5	283	508	197,5	100	1030	185	450	400	24	176
NOS32/250-9-2-12	132M	9	2900	N4	H95	32	50	3-400	72,5	1035,5	475,5	1042,5	283	508	197,5	100	1030	185	450	400	24	175
NOS32/250-11-2-12	160M	11	2900	N4	H95	32	50	3-400	72,5	1146	586	1042,5	283	508	197,5	100	1030	185	450	400	24	192
NOS32/250-15-2-12	160M	15	2900	N4	H95	32	50	3-400	72,5	1146	586	1042,5	283	508	197,5	100	1030	185	450	400	24	204
NOS40/125-1.1-2-12	80	1,1	2900	N2	H80	40	65	3-230-400	60	823,5	283,5	835	195	335	150	100	830	145	360	320	19	88
NOS40/125-1.5-2-12	90S	1,5	2900	N2	H80	40	65	3-230-400	60	836,5	296,5	835	195	335	150	100	830	145	360	320	19	93
NOS40/125-2.2-2-12	90L	2,2	2900	N3	H80	40	65	3-230-400	60	856,5	316,5	935	195	335	170	100	930	165	390	350	19	103
NOS40/125-3-2-12	100L	3	2900	N3	H80	40	65	3-230-400	60	892	352	935	195	335	170	100	930	165	390	350	19	111
NOS40/160-2.2-2-12	90L	2,2	2900	N3	H80	40	65	3-230-400	60	856,5	316,5	935	215	375	170	100	930	165	390	350	19	106
NOS40/160-3-2-12	100L	3	2900	N3	H80	40	65	3-230-400	60	892	352	935	215	375	170	100	930	165	390	350	19	115
NOS40/160-4-2-12	112M	4	2900	N3	H80	40	65	3-230-400	60	935,5	395,5	935	215	375	170	100	930	165	390	350	19	120
NOS40/160-5.5-2-12	132S	5,5	2900	N3	H95	40	65	3-400	60	980,5	440,5	935	215	375	170	100	930	165	390	350	19	135
NOS40/160-7.5-2-12	132S	7,5	2900	N3	H95	40	65	3-400	60	980,5	440,5	935	215	375	170	100	930	165	390	350	19	142
NOS40/160-9-2-12	132M	9	2900	N3	H95	40	65	3-400	60	1015,5	475,5	935	215	375	170	100	930	165	390	350	19	140
NOS40/200-5.5-2-12	132S	5,5	2900	N3	H95	40	65	3-400	60	1000,5	440,5	955	243	423	190	100	930	165	390	350	19	145
NOS40/200-7.5-2-12	132S	7,5	2900	N3	H95	40	65	3-400	60	1000,5	440,5	955	243	423	190	100	930	165	390	350	19	151
NOS40/200-9-2-12	132M	9	2900	N3	H95	40	65	3-400	60	1035,5	475,5	955	243	423	190	100	930	165	390	350	19	150
NOS40/200-11-2-12	160M	11	2900	N4	H95	40	65	3-400	60	1146	586	1055	263	443	210	100	1030	185	450	400	24	178
NOS40/200-15-2-12	160M	15	2900	N4	H95	40	65	3-400	60	1146	586	1055	263	443	210	100	1030	185	450	400	24	190
NOS40/200-18.5-2-12	160L	18,5	2900	N5	H95	40	65	3-400	60	1146	586	1175	263	443	230	100	1150	205	490	440	24	234
NOS40/250-7.5-2-12	132S	7,5	2900	N4	H95	40	65	3-400	72,5	1000,5	440,5	1042,5	283	508	197,5	100	1030	185	450	400	24	176
NOS40/250-9-2-12	132M	9	2900	N4	H95	40	65	3-400	72,5	1035,5	475,5	1042,5	283	508	197,5	100	1030	185	450	400	24	175
NOS40/250-11-2-12	160M	11	2900	N4	H95	40	65	3-400	72,5	1146	586	1042,5	283	508	197,5	100	1030	185	450	400	24	192
NOS40/250-15-2-12	160M	15	2900	N4	H95	40	65	3-400	72,5	1146	586	1042,5	283	508	197,5	100	1030	185	450	400	24	204
NOS40/250-18.5-2-12	160L	18,5	2900	N5	H95	40	65	3-400	72,5	1146	586	1162,5	283	508	217,5	100	1150	205	490	440	24	249
NOS40/315-15-2-12	160M	15	2900	N6	H95	40	65	3-400	72,5	1281	586	1322,5	328	578	257,5	100	1290	225	540	490	24	305
NOS40/315-18.5-2-12	160L	18,5	2900	N6	H95	40	65	3-400	72,5	1281	586	1322,5	328	578	257,5	100	1290	225	540	490	24	316
NOS40/315-22-2-12	180M	22	2900	N6	H110	40	65	3-400	72,5	1324	629	1322,5	328	578	257,5	100	1290	225	540	490	24	333
NOS40/315-30-2-12	200L	30	2900	N6	H125	40	65	3-400	72,5	1360	665	1322,5	328	578	257,5	100	1290	225	540	490	24	369
NOS40/315-37-2-12	200L	37	2900	N6	H125	40	65	3-400	72,5	1360	665	1322,5	328	578	257,5	100	1290	225	540	490	24	402
NOS50/125-1.5-2-12	90S	1,5	2900	N2	H80	50	65	3-230-400	60	856,5	296,5	855	215	375	170	100	830	145	360	320	19	96
NOS50/125-2.2-2-12	90L	2,2	2900	N3	H80	50	65	3-230-400	60	876,5	316,5	955	215	375	190	100	930	165	390	350	19	106
NOS50/125-3-2-12	100L	3	2900	N3	H80	50	65	3-230-400	60	912	352	955	215	375	190	100	930	165	390	350	19	115
NOS50/125-4-2-12	112M	4	2900	N3	H80	50	65	3-230-400	60	955,5	395,5	955	215	375	190	100	930	165	390	350	19	120
NOS50/125-5.5-2-12	132S	5,5	2900	N3	H95	50	65	3-400	60	1000,5	440,5	955	215	375	190	100	930	165	390	350	19	135
NOS50/160-3-2-12	100L	3	2900	N3	H80	50	65	3-230-400	60	912	352	955	243	423	190	100	930	165	390	350	19	126
NOS50/160-4-2-12	112M	4	2900	N3	H95	50	65	3-230-400	60	955,5	395,5	955	243	423	190	100	930	165	390	350	19	130
NOS50/160-5.5-2-12	132S	5,5	2900	N3	H95	50	65	3-400	60	1000,5	440,5	955	243	423	190	100	930	165	390	350	19	145
NOS50/160-7.5-2-12	132S	7,5	2900	N3	H95	50	65	3-400	60	1000,5	440,5	955	243	423	190	100	930	165	390	350	19	151

NOS

DIMENSIONS – UNITS – 2900 MIN -1 WITH SPACER

									Unit								Base plate					
TYPE	Motor housing type	Kw	min-1	Base Plate	Type Coupling	DNR	DNS	Voltage	A	L	L3	L4	h3	h4	S1	X	L1	L2	B2	B3	S4	Net Mass
								V	mm	mm	mm	mm	mm	mm	mm	mm	mm	mm	mm	mm	mm	kg
NOS50/160-9-2-12	132M	9	2900	N3	H95	50	65	3-400	60	1035,5	475,5	955	243	423	190	100	930	165	390	350	19	150
NOS50/160-11-2-12	160M	11	2900	N4	H95	50	65	3-400	60	1146	586	1055	263	443	210	100	1030	185	450	400	24	178
NOS50/160-15-2-12	160M	15	2900	N4	H95	50	65	3-400	60	1146	586	1055	263	443	210	100	1030	185	450	400	24	190
NOS50/200-7.5-2-12	132S	7,5	2900	N3	H95	50	65	3-400	60	1000,5	440,5	955	243	443	190	100	930	165	390	350	19	155
NOS50/200-9-2-12	132M	9	2900	N3	H95	50	65	3-400	60	1035,5	475,5	955	243	443	190	100	930	165	390	350	19	154
NOS50/200-11-2-12	160M	11	2900	N4	H95	50	65	3-400	60	1146	586	1055	263	463	210	100	1030	185	450	400	24	182
NOS50/200-15-2-12	160M	15	2900	N4	H95	50	65	3-400	60	1146	586	1055	263	463	210	100	1030	185	450	400	24	194
NOS50/200-18.5-2-12	160L	18,5	2900	N5	H95	50	65	3-400	60	1146	586	1175	263	463	230	100	1150	205	490	440	24	238
NOS50/200-22-2-12	180M	22	2900	N5	H110	50	65	3-400	60	1189	629	1175	283	483	230	100	1150	205	490	440	24	263
NOS50/250-11-2-12	160M	11	2900	N4	H95	50	65	3-400	72,5	1146	586	1042,5	283	508	197,5	100	1030	185	450	400	24	196
NOS50/250-15-2-12	160M	15	2900	N4	H95	50	65	3-400	72,5	1146	586	1042,5	283	508	197,5	100	1030	185	450	400	24	208
NOS50/250-18.5-2-12	160L	18,5	2900	N5	H95	50	65	3-400	72,5	1146	586	1162,5	283	508	217,5	100	1150	205	490	440	24	253
NOS50/250-22-2-12	180M	22	2900	N5	H110	50	65	3-400	72,5	1189	629	1162,5	283	508	217,5	100	1150	205	490	440	24	269
NOS50/250-30-2-12	200L	30	2900	N6	H125	50	65	3-400	72,5	1225	665	1297,5	303	528	232,5	100	1290	225	540	490	24	345
NOS50/315-15-2-12	160M	15	2900	N6	H95	50	65	3-400	72,5	1281	586	1322,5	328	608	257,5	100	1290	225	540	490	24	321
NOS50/315-18.5-2-12	160L	18,5	2900	N6	H95	50	65	3-400	72,5	1281	586	1322,5	328	608	257,5	100	1290	225	540	490	24	331
NOS50/315-22-2-12	180M	22	2900	N6	H110	50	65	3-400	72,5	1324	629	1322,5	328	608	257,5	100	1290	225	540	490	24	348
NOS50/315-30-2-12	200L	30	2900	N6	H125	50	65	3-400	72,5	1360	665	1322,5	328	608	257,5	100	1290	225	540	490	24	385
NOS50/315-37-2-12	200L	37	2900	N6	H125	50	65	3-400	72,5	1360	665	1322,5	328	608	257,5	100	1290	225	540	490	24	418
NOS50/315-45-2-12	225S-M	45	2900	N7	H125	50	65	3-400	72,5	1430	735	1472,5	328	608	282,5	100	1440	250	610	550	29	530
NOS50/315-55-2-12	250S-M	55	2900	N7	H140	50	65	3-400	72,5	1479	784	1472,5	353	633	282,5	100	1440	250	610	550	29	542
NOS50/315-75-2-12	280S-M	75	2900	N9	H160	50	65	3-400	72,5	1766	1071	1872,5	403	683	352,5	100	1840	320	730	670	29	1079
NOS65/125-3-2-12	100L	3	2900	N3	H80	65	80	3-230-400	72,5	912	352	942,5	243	423	177,5	100	930	165	390	350	19	123
NOS65/125-4-2-12	112M	4	2900	N3	H80	65	80	3-230-400	72,5	955,5	395,5	942,5	243	423	177,5	100	930	165	390	350	19	126
NOS65/125-5.5-2-12	132S	5,5	2900	N3	H95	65	80	3-400	72,5	1000,5	440,5	942,5	243	423	177,5	100	930	165	390	350	19	142
NOS65/125-7.5-2-12	132S	7,5	2900	N3	H95	65	80	3-400	72,5	1000,5	440,5	942,5	243	423	177,5	100	930	165	390	350	19	148
NOS65/125-9-2-12	132M	9	2900	N3	H95	65	80	3-400	72,5	1035,5	475,5	942,5	243	423	177,5	100	930	165	390	350	19	147
NOS65/160-5.5-2-12	132S	5,5	2900	N3	H95	65	80	3-400	72,5	1000,5	440,5	942,5	243	443	177,5	100	930	165	390	350	19	148
NOS65/160-7.5-2-12	132S	7,5	2900	N3	H95	65	80	3-400	72,5	1000,5	440,5	942,5	243	443	177,5	100	930	165	390	350	19	154
NOS65/160-9-2-12	132M	9	2900	N3	H95	65	80	3-400	72,5	1035,5	475,5	942,5	243	443	177,5	100	930	165	390	350	19	153
NOS65/160-11-2-12	160M	11	2900	N4	H95	65	80	3-400	72,5	1146	586	1042,5	263	463	197,5	100	1030	185	450	400	24	181
NOS65/160-15-2-12	160M	15	2900	N4	H95	65	80	3-400	72,5	1146	586	1042,5	263	463	197,5	100	1030	185	450	400	24	193
NOS65/160-18.5-2-12	160L	18,5	2900	N5	H95	65	80	3-400	72,5	1146	586	1162,5	263	463	217,5	100	1150	205	490	440	24	237
NOS65/200-9-2-12	132M	9	2900	N4	H95	65	80	3-400	72,5	1035,5	475,5	1042,5	283	508	197,5	100	1030	185	450	400	24	174
NOS65/200-11-2-12	160M	11	2900	N5	H95	65	80	3-400	72,5	1146	586	1162,5	283	508	217,5	100	1150	205	490	440	24	225
NOS65/200-15-2-12	160M	15	2900	N5	H95	65	80	3-400	72,5	1146	586	1162,5	283	508	217,5	100	1150	205	490	440	24	237
NOS65/200-18.5-2-12	160L	18,5	2900	N5	H95	65	80	3-400	72,5	1146	586	1162,5	283	508	217,5	100	1150	205	490	440	24	248
NOS65/200-22-2-12	180M	22	2900	N5	H110	65	80	3-400	72,5	1189	629	1162,5	283	508	217,5	100	1150	205	490	440	24	264
NOS65/200-30-2-12	200L	30	2900	N6	H125	65	80	3-400	72,5	1225	665	1297,5	303	528	232,5	100	1290	225	540	490	24	340
NOS65/250-18.5-2-12	160L	18,5	2900	N6	H95	65	80	3-400	90	1256	586	1280	303	553	215	100	1290	225	540	490	24	308
NOS65/250-22-2-12	180M	22	2900	N6	H110	65	80	3-400	90	1299	629	1280	303	553	215	100	1290	225	540	490	24	325
NOS65/250-30-2-12	200L	30	2900	N7	H125	65	80	3-400	90	1335	665	1430	303	553	240	100	1440	250	610	550	29	408
NOS65/250-37-2-12	200L	37	2900	N7	H125	65	80	3-400	90	1335	665	1430	303	553	240	100	1440	250	610	550	29	441
NOS65/250-45-2-12	225S-M	45	2900	N7	H125	65	80	3-400	90	1405	735	1430	328	578	240	100	1440	250	610	550	29	520
NOS80/160-7.5-2-12	132S	7,5	2900	N4	H95	80	100	3-400	72,5	1065,5	440,5	1067,5	283	508	222,5	140	1030	185	450	400	24	173
NOS80/160-9-2-12	132M	9	2900	N4	H95	80	100	3-400	72,5	1100,5	475,5	1067,5	283	508	222,5	140	1030	185	450	400	24	172
NOS80/160-11-2-12	160M	11	2900	N5	H95	80	100	3-400	72,5	1211	586	1187,5	283	508	242,5	140	1150	205	490	440	24	223
NOS80/160-15-2-12	160M	15	2900	N5	H95	80	100	3-400	72,5	1211	586	1187,5	283	508	242,5	140	1150	205	490	440	24	236
NOS80/160-18.5-2-12	160L	18,5	2900	N5	H95	80	100	3-400	72,5	1211	586	1187,5	283	508	242,5	140	1150	205	490	440	24	246
NOS80/160-22-2-12	180M	22	2900	N5	H110	80	100	3-400	72,5	1254	629	1187,5	283	508	242,5	140	1150	205	490	440	24	262

DIMENSIONS – UNITS – 2900 MIN -1 WITH SPACER

									Unit								Base plate					
TYPE	Motor housing type	Kw	min-1	Base Plate	Type Coupling	DNR	DNS	Voltage	A	L	L3	L4	h3	h4	S1	X	L1	L2	B2	B3	S4	Net Mass
								V	mm	mm	mm	mm	mm	mm	mm	mm	mm	mm	mm	mm	mm	kg
NOS80/160-30-2-12	200L	30	2900	N6	H125	80	100	3-400	72,5	1290	665	1322,5	303	528	257,5	140	1290	225	540	490	24	339
NOS80/200-15-2-12	160M	15	2900	N6	H95	80	100	3-400	72,5	1321	586	1322,5	283	533	257,5	140	1290	225	540	490	24	284
NOS80/200-18.5-2-12	160L	18,5	2900	N6	H95	80	100	3-400	72,5	1321	586	1322,5	283	533	257,5	140	1290	225	540	490	24	294
NOS80/200-22-2-12	180M	22	2900	N6	H110	80	100	3-400	72,5	1364	629	1322,5	283	533	257,5	140	1290	225	540	490	24	311
NOS80/200-30-2-12	200L	30	2900	N7	H125	80	100	3-400	72,5	1400	665	1472,5	303	553	282,5	140	1440	250	610	550	29	401
NOS80/200-37-2-12	200L	37	2900	N7	H125	80	100	3-400	72,5	1400	665	1472,5	303	553	282,5	140	1440	250	610	550	29	434
NOS80/200-45-2-12	225S-M	45	2900	N7	H125	80	100	3-400	72,5	1470	735	1472,5	328	578	282,5	140	1440	250	610	550	29	513
NOS80/250-22-2-12	180M	22	2900	N6	H110	80	100	3-400	90	1364	629	1305	303	583	240	140	1290	225	540	490	24	330
NOS80/250-30-2-12	200L	30	2900	N7	H125	80	100	3-400	90	1400	665	1455	303	583	265	140	1440	250	610	550	29	413
NOS80/250-37-2-12	200L	37	2900	N7	H125	80	100	3-400	90	1400	665	1455	303	583	265	140	1440	250	610	550	29	446
NOS80/250-45-2-12	225S-M	45	2900	N7	H125	80	100	3-400	90	1470	735	1455	328	608	265	140	1440	250	610	550	29	525
NOS80/250-55-2-12	250S-M	55	2900	N7	H140	80	100	3-400	90	1519	784	1455	353	633	265	140	1440	250	610	550	29	540
NOS100/160-18.5-2-12	160L	18,5	2900	N6	H95	100	125	3-400	90	1321	586	1305	303	583	240	140	1290	225	540	490	24	317
NOS100/160-22-2-12	180M	22	2900	N6	H110	100	125	3-400	90	1364	629	1305	303	583	240	140	1290	225	540	490	24	333
NOS100/160-30-2-12	200L	30	2900	N7	H125	100	125	3-400	90	1400	665	1455	303	583	265	140	1440	250	610	550	29	416
NOS100/160-37-2-12	200L	37	2900	N7	H125	100	125	3-400	90	1400	665	1455	303	583	265	140	1440	250	610	550	29	449
NOS100/200-18.5-2-12	160L	18,5	2900	N6	H95	100	125	3-400	90	1321	586	1305	303	583	240	140	1290	225	540	490	24	308
NOS100/200-22-2-12	180M	22	2900	N6	H110	100	125	3-400	90	1364	629	1305	303	583	240	140	1290	225	540	490	24	325
NOS100/200-30-2-12	200L	30	2900	N7	H125	100	125	3-400	90	1400	665	1455	303	583	265	140	1440	250	610	550	29	408
NOS100/200-37-2-12	200L	37	2900	N7	H125	100	125	3-400	90	1400	665	1455	303	583	265	140	1440	250	610	550	29	441
NOS100/200-45-2-12	225S-M	45	2900	N7	H125	100	125	3-400	90	1470	735	1455	328	608	265	140	1440	250	610	550	29	520
NOS100/250-30-2-12	200L	30	2900	N7	H125	100	125	3-400	90	1415	665	1470	328	608	280	140	1440	250	610	550	29	428
NOS100/250-37-2-12	200L	37	2900	N7	H125	100	125	3-400	90	1415	665	1470	328	608	280	140	1440	250	610	550	29	461
NOS100/250-45-2-12	225S-M	45	2900	N7	H125	100	125	3-400	90	1485	735	1470	328	608	280	140	1440	250	610	550	29	528
NOS100/250-55-2-12	250S-M	55	2900	N7	H140	100	125	3-400	90	1534	784	1470	353	633	280	140	1440	250	610	550	29	542
NOS100/250-75-2-12	280S-M	75	2900	N9	H160	100	125	3-400	90	1821	1071	1870	403	683	350	140	1840	320	730	670	29	1079
NOS100/250-90-2-12	280S-M	90	2900	N9	H160	100	125	3-400	90	1821	1071	1870	403	683	350	140	1840	320	730	670	29	1103
NOS125/200-55-2-12	250S-M	55	2900	N7	H140	125	150	3-400	90	1534	784	1470	353	668	280	140	1440	250	610	550	29	549
NOS125/200-75-2-12	280S-M	75	2900	N9	H160	125	150	3-400	90	1821	1071	1870	403	718	350	140	1840	320	730	670	29	1088
NOS125/200-90-2-12	280S-M	90	2900	N9	H160	125	150	3-400	90	1821	1071	1870	403	718	350	140	1840	320	730	670	29	1112
NOS125/200-110-2-12	315S-M	110	2900	N9	H160	125	150	3-400	90	1994	1244	1870	438	753	350	140	1840	320	730	670	29	1349

NOS

DIMENSIONS – UNITS – 2900 MIN -1 WITHOUT SPACER

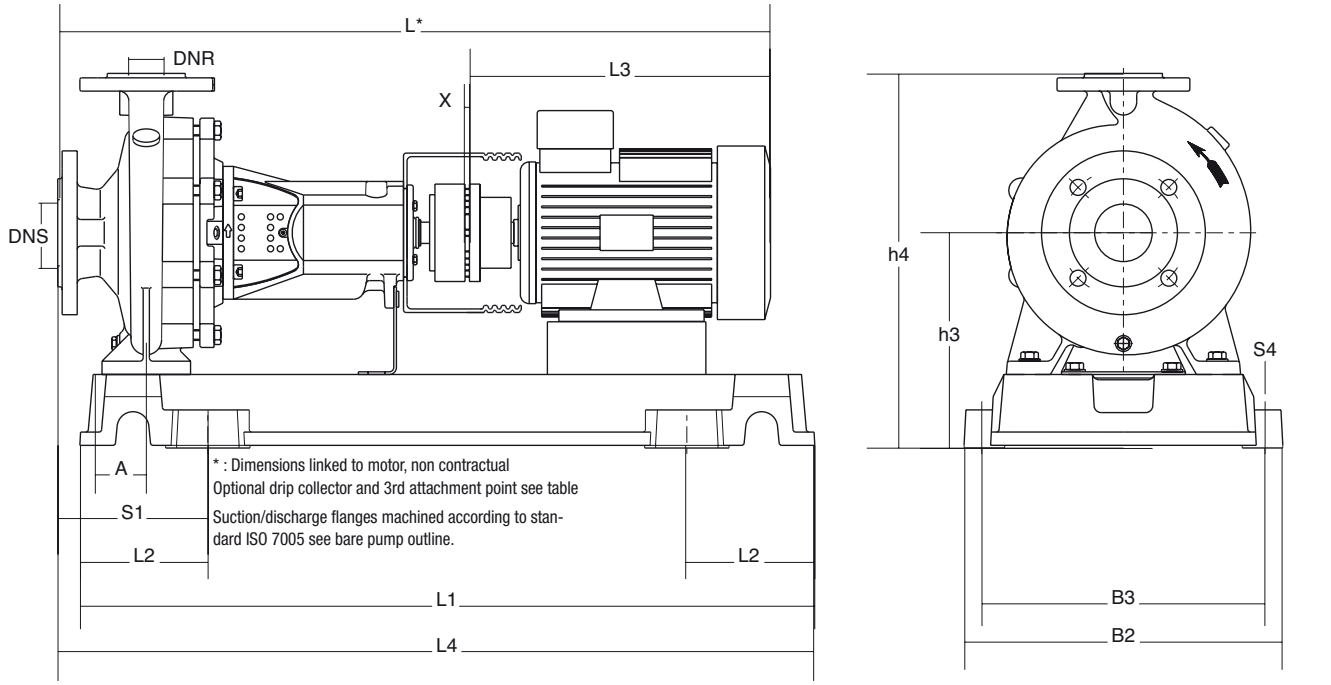

DIMENSIONS – UNITS – 2900 MIN -1 WITHOUT SPACER

									Unit								Base Plate					
TYPE	Motor housing type	Kw	min-1	Base Plate	Type Coupling	DNR	DNS	Voltage	A	L	L3	L4	h3	h4	S1	X	L1	L2	B2	B3	S4	Net Mass
								V	mm	mm	mm	mm	mm	mm	mm	mm	mm	mm	mm	mm	mm	kg
NOS32/125-0.55-2-05	71	0,55	2900	N2	B68	32	50	3-230-400	60	695,5	252,5	835	195	335	150	3	830	145	360	320	19	83
NOS32/125-0.75-2-05	80	0,75	2900	N2	B68	32	50	3-230-400	60	726,5	283,5	835	195	335	150	3	830	145	360	320	19	87
NOS32/125-1.1-2-05	80	1,1	2900	N2	B68	32	50	3-230-400	60	726,5	283,5	835	195	335	150	3	830	145	360	320	19	89
NOS32/125-1.5-2-05	90S	1,5	2900	N2	B68	32	50	3-230-400	60	739,5	296,5	835	195	335	150	3	830	145	360	320	19	94
NOS32/125-2.2-2-05	90L	2,2	2900	N2	B68	32	50	3-230-400	60	759,5	316,5	835	195	335	150	3	830	145	360	320	19	94
NOS32/160-1.5-2-05	90S	1,5	2900	N2	B68	32	50	3-230-400	60	739,5	296,5	835	215	375	150	3	830	145	360	320	19	96
NOS32/160-2.2-2-05	90L	2,2	2900	N2	B68	32	50	3-230-400	60	759,5	316,5	835	215	375	150	3	830	145	360	320	19	97
NOS32/160-3-2-05	100L	3	2900	N2	B80	32	50	3-230-400	60	795	352	835	215	375	150	3	830	145	360	320	19	106
NOS32/160-4-2-05	112M	4	2900	N2	B80	32	50	3-230-400	60	838,5	395,5	835	215	375	150	3	830	145	360	320	19	111
NOS32/160-5.5-2-05	132S	5,5	2900	N2	B95	32	50	3-400	60	883,5	440,5	835	215	375	150	3	830	145	360	320	19	127
NOS32/160B-1.5-2-05	90S	1,5	2900	N2	B68	32	50	3-230-400	60	739,5	296,5	835	215	375	150	3	830	145	360	320	19	96
NOS32/160B-2.2-2-05	90L	2,2	2900	N2	B68	32	50	3-230-400	60	759,5	316,5	835	215	375	150	3	830	145	360	320	19	97
NOS32/160B-3-2-05	100L	3	2900	N2	B80	32	50	3-230-400	60	795	352	835	215	375	150	3	830	145	360	320	19	106
NOS32/160B-4-2-05	112M	4	2900	N2	B80	32	50	3-230-400	60	838,5	395,5	835	215	375	150	3	830	145	360	320	19	111
NOS32/160B-5.5-2-05	132S	5,5	2900	N2	B95	32	50	3-400	60	883,5	440,5	835	215	375	150	3	830	145	360	320	19	127
NOS32/200-2.2-2-05	90L	2,2	2900	N2	B68	32	50	3-230-400	60	759,5	316,5	835	243	423	150	3	830	145	360	320	19	105
NOS32/200-3-2-05	100L	3	2900	N2	B80	32	50	3-230-400	60	795	352	835	243	423	150	3	830	145	360	320	19	112
NOS32/200-4-2-05	112M	4	2900	N2	B80	32	50	3-230-400	60	838,5	395,5	835	243	423	150	3	830	145	360	320	19	116
NOS32/200-5.5-2-05	132S	5,5	2900	N2	B95	32	50	3-400	60	883,5	440,5	835	243	423	150	3	830	145	360	320	19	131
NOS32/200-7.5-2-05	132S	7,5	2900	N2	B95	32	50	3-400	60	883,5	440,5	835	243	423	150	3	830	145	360	320	19	137
NOS32/200-9-2-05	132M	9	2900	N2	B95	32	50	3-400	60	918,5	475,5	835	243	423	150	3	830	145	360	320	19	136
NOS32/200-11-2-05	160M	11	2900	N4	B95	32	50	3-400	60	1029	586	1035	263	443	190	3	1030	185	450	400	24	174
NOS32/200B-2.2-2-05	90L	2,2	2900	N2	B68	32	50	3-230-400	60	759,5	316,5	835	243	423	150	3	830	145	360	320	19	105
NOS32/200B-3-2-05	100L	3	2900	N2	B80	32	50	3-230-400	60	795	352	835	243	423	150	3	830	145	360	320	19	112
NOS32/200B-4-2-05	112M	4	2900	N2	B80	32	50	3-230-400	60	838,5	395,5	835	243	423	150	3	830	145	360	320	19	116
NOS32/200B-5.5-2-05	132S	5,5	2900	N2	B95	32	50	3-400	60	883,5	440,5	835	243	423	150	3	830	145	360	320	19	131
NOS32/200B-7.5-2-05	132S	7,5	2900	N2	B95	32	50	3-400	60	883,5	440,5	835	243	423	150	3	830	145	360	320	19	137
NOS32/200B-9-2-05	132M	9	2900	N2	B95	32	50	3-400	60	918,5	475,5	835	243	423	150	3	830	145	360	320	19	136
NOS32/200B-11-2-05	160M	11	2900	N4	B95	32	50	3-400	60	1029	586	1035	263	443	190	3	1030	185	450	400	24	174
NOS32/250-7.5-2-05	132S	7,5	2900	N4	B95	32	50	3-400	72,5	903,5	440,5	1042,5	283	508	197,5	3	1030	185	450	400	24	174
NOS32/250-9-2-05	132M	9	2900	N4	B95	32	50	3-400	72,5	938,5	475,5	1042,5	283	508	197,5	3	1030	185	450	400	24	173

DIMENSIONS – UNITS – 2900 MIN -1 WITHOUT SPACER

									Unit								Base Plate					
TYPE	Motor housing type	Kw	min-1	Base Plate	Type Coupling	DNR	DNS	Voltage	A	L	L3	L4	h3	h4	S1	X	L1	L2	B2	B3	S4	Net Mass
								V	mm	mm	mm	mm	mm	mm	mm	mm	mm	mm	mm	mm	mm	kg
NOS32/250-11-2-05	160M	11	2900	N4	B95	32	50	3-400	72,5	1049	586	1042,5	283	508	197,5	3	1030	185	450	400	24	191
NOS32/250-15-2-05	160M	15	2900	N4	B95	32	50	3-400	72,5	1049	586	1042,5	283	508	197,5	3	1030	185	450	400	24	203
NOS40/125-1.1-2-05	80	1,1	2900	N2	B68	40	65	3-230-400	60	726,5	283,5	835	195	335	150	3	830	145	360	320	19	86
NOS40/125-1.5-2-05	90S	1,5	2900	N2	B68	40	65	3-230-400	60	739,5	296,5	835	195	335	150	3	830	145	360	320	19	90
NOS40/125-2.2-2-05	90L	2,2	2900	N2	B68	40	65	3-230-400	60	759,5	316,5	835	195	335	150	3	830	145	360	320	19	91
NOS40/125-3-2-05	100L	3	2900	N2	B80	40	65	3-230-400	60	795	352	835	195	335	150	3	830	145	360	320	19	100
NOS40/160-2.2-2-05	90L	2,2	2900	N2	B68	40	65	3-230-400	60	759,5	316,5	835	215	375	150	3	830	145	360	320	19	94
NOS40/160-3-2-05	100L	3	2900	N2	B80	40	65	3-230-400	60	795	352	835	215	375	150	3	830	145	360	320	19	103
NOS40/160-4-2-05	112M	4	2900	N2	B80	40	65	3-230-400	60	838,5	395,5	835	215	375	150	3	830	145	360	320	19	108
NOS40/160-5.5-2-05	132S	5,5	2900	N2	B95	40	65	3-400	60	883,5	440,5	835	215	375	150	3	830	145	360	320	19	124
NOS40/160-7.5-2-05	132S	7,5	2900	N2	B95	40	65	3-400	60	883,5	440,5	835	215	375	150	3	830	145	360	320	19	130
NOS40/160-9-2-05	132M	9	2900	N2	B95	40	65	3-400	60	918,5	475,5	835	215	375	150	3	830	145	360	320	19	129
NOS40/200-5.5-2-05	132S	5,5	2900	N3	B95	40	65	3-400	60	903,5	440,5	955	243	423	190	3	930	165	390	350	19	143
NOS40/200-7.5-2-05	132S	7,5	2900	N3	B95	40	65	3-400	60	903,5	440,5	955	243	423	190	3	930	165	390	350	19	150
NOS40/200-9-2-05	132M	9	2900	N3	B95	40	65	3-400	60	938,5	475,5	955	243	423	190	3	930	165	390	350	19	149
NOS40/200-11-2-05	160M	11	2900	N4	B95	40	65	3-400	60	1049	586	1055	263	443	210	3	1030	185	450	400	24	176
NOS40/200-15-2-05	160M	15	2900	N4	B95	40	65	3-400	60	1049	586	1055	263	443	210	3	1030	185	450	400	24	189
NOS40/200-18.5-2-05	160L	18,5	2900	N4	B95	40	65	3-400	60	1049	586	1055	263	443	210	3	1030	185	450	400	24	199
NOS40/250-7.5-2-05	132S	7,5	2900	N4	B95	40	65	3-400	72,5	903,5	440,5	1042,5	283	508	197,5	3	1030	185	450	400	24	174
NOS40/250-9-2-05	132M	9	2900	N4	B95	40	65	3-400	72,5	938,5	475,5	1042,5	283	508	197,5	3	1030	185	450	400	24	173
NOS40/250-11-2-05	160M	11	2900	N4	B95	40	65	3-400	72,5	1049	586	1042,5	283	508	197,5	3	1030	185	450	400	24	191
NOS40/250-15-2-05	160M	15	2900	N4	B95	40	65	3-400	72,5	1049	586	1042,5	283	508	197,5	3	1030	185	450	400	24	203
NOS40/250-18.5-2-05	160L	18,5	2900	N4	B95	40	65	3-400	72,5	1049	586	1042,5	283	508	197,5	3	1030	185	450	400	24	213
NOS40/315-15-2-05	160M	15	2900	N5	B95	40	65	3-400	72,5	1184	586	1187,5	328	578	242,5	3	1150	205	490	440	24	273
NOS40/315-18.5-2-05	160L	18,5	2900	N5	B95	40	65	3-400	72,5	1184	586	1187,5	328	578	242,5	3	1150	205	490	440	24	284
NOS40/315-22-2-05	180M	22	2900	N5	B110	40	65	3-400	72,5	1227	629	1187,5	328	578	242,5	3	1150	205	490	440	24	302
NOS40/315-30-2-05	200L	30	2900	N6	B125	40	65	3-400	72,5	1263	665	1322,5	328	578	257,5	3	1290	225	540	490	24	367
NOS40/315-37-2-05	200L	37	2900	N6	B125	40	65	3-400	72,5	1263	665	1322,5	328	578	257,5	3	1290	225	540	490	24	400
NOS50/125-1.5-2-05	90S	1,5	2900	N2	B68	50	65	3-230-400	60	759,5	296,5	855	215	375	170	3	830	145	360	320	19	93
NOS50/125-2.2-2-05	90L	2,2	2900	N2	B68	50	65	3-230-400	60	779,5	316,5	855	215	375	170	3	830	145	360	320	19	94
NOS50/125-3-2-05	100L	3	2900	N2	B80	50	65	3-230-400	60	815	352	855	215	375	170	3	830	145	360	320	19	103
NOS50/125-4-2-05	112M	4	2900	N2	B80	50	65	3-230-400	60	858,5	395,5	855	215	375	170	3	830	145	360	320	19	108
NOS50/125-5.5-2-05	132S	5,5	2900	N2	B95	50	65	3-400	60	903,5	440,5	855	215	375	170	3	830	145	360	320	19	124
NOS50/160-3-2-05	100L	3	2900	N3	B80	50	65	3-230-400	60	815	352	955	243	423	190	3	930	165	390	350	19	125
NOS50/160-4-2-05	112M	4	2900	N3	B95	50	65	3-230-400	60	858,5	395,5	955	243	423	190	3	930	165	390	350	19	129
NOS50/160-5.5-2-05	132S	5,5	2900	N3	B95	50	65	3-400	60	903,5	440,5	955	243	423	190	3	930	165	390	350	19	143
NOS50/160-7.5-2-05	132S	7,5	2900	N3	B95	50	65	3-400	60	903,5	440,5	955	243	423	190	3	930	165	390	350	19	150
NOS50/160-9-2-05	132M	9	2900	N3	B95	50	65	3-400	60	938,5	475,5	955	243	423	190	3	930	165	390	350	19	149
NOS50/160-11-2-05	160M	11	2900	N4	B95	50	65	3-400	60	1049	586	1055	263	443	210	3	1030	185	450	400	24	176
NOS50/160-15-2-05	160M	15	2900	N4	B95	50	65	3-400	60	1049	586	1055	263	443	210	3	1030	185	450	400	24	189
NOS50/200-7.5-2-05	132S	7,5	2900	N3	B95	50	65	3-400	60	903,5	440,5	955	243	443	190	3	930	165	390	350	19	154
NOS50/200-9-2-05	132M	9	2900	N3	B95	50	65	3-400	60	938,5	475,5	955	243	443	190	3	930	165	390	350	19	153
NOS50/200-11-2-05	160M	11	2900	N4	B95	50	65	3-400	60	1049	586	1055	263	463	210	3	1030	185	450	400	24	180
NOS50/200-15-2-05	160M	15	2900	N4	B95	50	65	3-400	60	1049	586	1055	263	463	210	3	1030	185	450	400	24	193
NOS50/200-18.5-2-05	160L	18,5	2900	N4	B95	50	65	3-400	60	1049	586	1055	263	463	210	3	1030	185	450	400	24	203
NOS50/200-22-2-05	180M	22	2900	N4	B110	50	65	3-400	60	1092	629	1055	283	483	210	3	1030	185	450	400	24	229
NOS50/250-11-2-05	160M	11	2900	N4	B95	50	65	3-400	72,5	1049	586	1042,5	283	508	197,5	3	1030	185	450	400	24	195
NOS50/250-15-2-05	160M	15	2900	N4	B95	50	65	3-400	72,5	1049	586	1042,5	283	508	197,5	3	1030	185	450	400	24	207
NOS50/250-18.5-2-05	160L	18,5	2900	N4	B95	50	65	3-400	72,5	1049	586	1042,5	283	508	197,5	3	1030	185	450	400	24	217
NOS50/250-22-2-05	180M	22	2900	N4	B110	50	65	3-400	72,5	1092	629	1042,5	283	508	197,5	3	1030	185	450	400	24	235
NOS50/250-30-2-05	200L	30	2900	N6	B125	50	65	3-400	72,5	1128	665	1297,5	303	528	232,5	3	1290	225	540	490	24	343
NOS50/315-15-2-05	160M	15	2900	N5	B95	50	65	3-400	72,5	1184	586	1187,5	328	608	242,5	3	1150	205	490	440	24	289
NOS50/315-18.5-2-05	160L	18,5	2900	N5	B95	50	65	3-400	72,5	1184	586	1187,5	328	608	242,5	3	1150	205	490	440	24	299
NOS50/315-22-2-05	180M	22	2900	N5	B110	50	65	3-400	72,5	1227	629	1187,5	328	608	242,5	3	1150	205	490	440	24	317
NOS50/315-30-2-05	200L	30	2900	N6	B125	50	65	3-400	72,5	1263	665	1322,5	328	608	257,5	3	1290	225	540	490	24	383
NOS50/315-37-2-05	200L	37	2900	N6	B125	50	65	3-400	72,5	1263	665	1322,5	328	608	257,5	3	1290	225	540	490	24	416
NOS50/315-45-2-05	225S-M	45	2900	N6	B125	50	65	3-400	72,5	1333	735	1322,5	328	608	257,5	3	1290	225	540	490	24	482
NOS50/315-55-2-05	250S-M	55	2900	N7	B140	50	65	3-400	72,5	1382	784	1472,5	353	633	282,5	3	1440	250	610	550	29	538

NOS

DIMENSIONS – UNITS – 2900 MIN -1 WITHOUT SPACER

									Unit								Base Plate					
TYPE	Motor housing type	Kw	min-1	Base Plate	Type Coupling	DNR	DNS	Voltage	A	L	L3	L4	h3	h4	S1	X	L1	L2	B2	B3	S4	Net Mass
								V	mm	mm	mm	mm	mm	mm	mm	mm	mm	mm	mm	mm	mm	kg
NOS50/315-75-2-05	280S-M	75	2900	N9	B160	50	65	3-400	72,5	1669	1071	1872,5	403	683	352,5	3	1840	320	730	670	29	1073
NOS65/125-3-2-05	100L	3	2900	N3	B80	65	80	3-230-400	72,5	815	352	942,5	243	423	177,5	3	930	165	390	350	19	122
NOS65/125-4-2-05	112M	4	2900	N3	B80	65	80	3-230-400	72,5	858,5	395,5	942,5	243	423	177,5	3	930	165	390	350	19	125
NOS65/125-5.5-2-05	132S	5,5	2900	N3	B95	65	80	3-400	72,5	903,5	440,5	942,5	243	423	177,5	3	930	165	390	350	19	140
NOS65/125-7.5-2-05	132S	7,5	2900	N3	B95	65	80	3-400	72,5	903,5	440,5	942,5	243	423	177,5	3	930	165	390	350	19	147
NOS65/125-9-2-05	132M	9	2900	N3	B95	65	80	3-400	72,5	938,5	475,5	942,5	243	423	177,5	3	930	165	390	350	19	146
NOS65/160-5.5-2-05	132S	5,5	2900	N3	B95	65	80	3-400	72,5	903,5	440,5	942,5	243	443	177,5	3	930	165	390	350	19	147
NOS65/160-7.5-2-05	132S	7,5	2900	N3	B95	65	80	3-400	72,5	903,5	440,5	942,5	243	443	177,5	3	930	165	390	350	19	153
NOS65/160-9-2-05	132M	9	2900	N3	B95	65	80	3-400	72,5	938,5	475,5	942,5	243	443	177,5	3	930	165	390	350	19	152
NOS65/160-11-2-05	160M	11	2900	N4	B95	65	80	3-400	72,5	1049	586	1042,5	263	463	197,5	3	1030	185	450	400	24	179
NOS65/160-15-2-05	160M	15	2900	N4	B95	65	80	3-400	72,5	1049	586	1042,5	263	463	197,5	3	1030	185	450	400	24	192
NOS65/160-18.5-2-05	160L	18,5	2900	N4	B95	65	80	3-400	72,5	1049	586	1042,5	263	463	197,5	3	1030	185	450	400	24	202
NOS65/200-9-2-05	132M	9	2900	N4	B95	65	80	3-400	72,5	938,5	475,5	1042,5	283	508	197,5	3	1030	185	450	400	24	172
NOS65/200-11-2-05	160M	11	2900	N4	B95	65	80	3-400	72,5	1049	586	1042,5	283	508	197,5	3	1030	185	450	400	24	190
NOS65/200-15-2-05	160M	15	2900	N4	B95	65	80	3-400	72,5	1049	586	1042,5	283	508	197,5	3	1030	185	450	400	24	202
NOS65/200-18.5-2-05	160L	18,5	2900	N4	B95	65	80	3-400	72,5	1049	586	1042,5	283	508	197,5	3	1030	185	450	400	24	212
NOS65/200-22-2-05	180M	22	2900	N4	B110	65	80	3-400	72,5	1092	629	1042,5	283	508	197,5	3	1030	185	450	400	24	230
NOS65/200-30-2-05	200L	30	2900	N6	B125	65	80	3-400	72,5	1128	665	1297,5	303	528	232,5	3	1290	225	540	490	24	338
NOS65/250-18.5-2-05	160L	18,5	2900	N5	B95	65	80	3-400	90	1159	586	1145	303	553	200	3	1150	205	490	440	24	276
NOS65/250-22-2-05	180M	22	2900	N5	B110	65	80	3-400	90	1202	629	1145	303	553	200	3	1150	205	490	440	24	294
NOS65/250-30-2-05	200L	30	2900	N6	B125	65	80	3-400	90	1238	665	1280	303	553	215	3	1290	225	540	490	24	359
NOS65/250-37-2-05	200L	37	2900	N6	B125	65	80	3-400	90	1238	665	1280	303	553	215	3	1290	225	540	490	24	392
NOS65/250-45-2-05	225S-M	45	2900	N6	B125	65	80	3-400	90	1308	735	1280	328	578	215	3	1290	225	540	490	24	471
NOS80/160-7.5-2-05	132S	7,5	2900	N4	B95	80	100	3-400	72,5	928,5	440,5	1067,5	283	508	222,5	3	1030	185	450	400	24	171
NOS80/160-9-2-05	132M	9	2900	N4	B95	80	100	3-400	72,5	963,5	475,5	1067,5	283	508	222,5	3	1030	185	450	400	24	170
NOS80/160-11-2-05	160M	11	2900	N4	B95	80	100	3-400	72,5	1074	586	1067,5	283	508	222,5	3	1030	185	450	400	24	188
NOS80/160-15-2-05	160M	15	2900	N4	B95	80	100	3-400	72,5	1074	586	1067,5	283	508	222,5	3	1030	185	450	400	24	200
NOS80/160-18.5-2-05	160L	18,5	2900	N4	B95	80	100	3-400	72,5	1074	586	1067,5	283	508	222,5	3	1030	185	450	400	24	210
NOS80/160-22-2-05	180M	22	2900	N4	B110	80	100	3-400	72,5	1117	629	1067,5	283	508	222,5	3	1030	185	450	400	24	228
NOS80/160-30-2-05	200L	30	2900	N6	B125	80	100	3-400	72,5	1153	665	1322,5	303	528	257,5	3	1290	225	540	490	24	336
NOS80/200-15-2-05	160M	15	2900	N5	B95	80	100	3-400	72,5	1184	586	1187,5	283	533	242,5	3	1150	205	490	440	24	251
NOS80/200-18.5-2-05	160L	18,5	2900	N5	B95	80	100	3-400	72,5	1184	586	1187,5	283	533	242,5	3	1150	205	490	440	24	262
NOS80/200-22-2-05	180M	22	2900	N5	B110	80	100	3-400	72,5	1227	629	1187,5	283	533	242,5	3	1150	205	490	440	24	280
NOS80/200-30-2-05	200L	30	2900	N6	B125	80	100	3-400	72,5	1263	665	1322,5	303	553	257,5	3	1290	225	540	490	24	353
NOS80/200-37-2-05	200L	37	2900	N6	B125	80	100	3-400	72,5	1263	665	1322,5	303	553	257,5	3	1290	225	540	490	24	386
NOS80/200-45-2-05	225S-M	45	2900	N6	B125	80	100	3-400	72,5	1333	735	1322,5	328	578	257,5	3	1290	225	540	490	24	464
NOS80/250-22-2-05	180M	22	2900	N6	B110	80	100	3-400	90	1227	629	1305	303	583	240	3	1290	225	540	490	24	330
NOS80/250-30-2-05	200L	30	2900	N6	B125	80	100	3-400	90	1263	665	1305	303	583	240	3	1290	225	540	490	24	364
NOS80/250-37-2-05	200L	37	2900	N6	B125	80	100	3-400	90	1263	665	1305	303	583	240	3	1290	225	540	490	24	397
NOS80/250-45-2-05	225S-M	45	2900	N6	B125	80	100	3-400	90	1333	735	1305	328	608	240	3	1290	225	540	490	24	476
NOS80/250-55-2-05	250S-M	55	2900	N7	B140	80	100	3-400	90	1382	784	1455	353	633	265	3	1440	250	610	550	29	535
NOS100/160-18.5-2-05	160L	18,5	2900	N5	B95	100	125	3-400	90	1184	586	1170	303	583	225	3	1150	205	490	440	24	284
NOS100/160-22-2-05	180M	22	2900	N5	B110	100	125	3-400	90	1227	629	1170	303	583	225	3	1150	205	490	440	24	302
NOS100/160-30-2-05	200L	30	2900	N6	B125	100	125	3-400	90	1263	665	1305	303	583	240	3	1290	225	540	490	24	367
NOS100/160-37-2-05	200L	37	2900	N6	B125	100	125	3-400	90	1263	665	1305	303	583	240	3	1290	225	540	490	24	400
NOS100/200-18.5-2-05	160L	18,5	2900	N5	B95	100	125	3-400	90	1184	586	1170	303	583	225	3	1150	205	490	440	24	276
NOS100/200-22-2-05	180M	22	2900	N5	B110	100	125	3-400	90	1227	629	1170	303	583	225	3	1150	205	490	440	24	294
NOS100/200-30-2-05	200L	30	2900	N6	B125	100	125	3-400	90	1263	665	1305	303	583	240	3	1290	225	540	490	24	359
NOS100/200-37-2-05	200L	37	2900	N6	B125	100	125	3-400	90	1263	665	1305	303	583	240	3	1290	225	540	490	24	392
NOS100/200-45-2-05	225S-M	45	2900	N6	B125	100	125	3-400	90	1333	735	1305	328	608	240	3	1290	225	540	490	24	471
NOS100/250-30-2-05	200L	30	2900	N6	B125	100	125	3-400	90	1278	665	1320	328	608	255	3	1290	225	540	490	24	380
NOS100/250-37-2-05	200L	37	2900	N6	B125	100	125	3-400	90	1278	665	1320	328	608	255	3	1290	225	540	490	24	412
NOS100/250-45-2-05	225S-M	45	2900	N6	B125	100	125	3-400	90	1348	735	1320	328	608	255	3	1290	225	540	490	24	479
NOS100/250-55-2-05	250S-M	55	2900	N7	B140	100	125	3-400	90	1397	784	1470	353	633	280	3	1440	250	610	550	29	537
NOS100/250-75-2-05	280S-M	75	2900	N9	B160	100	125	3-400	90	1684	1071	1870	403	683	350	3	1840	320	730	670	29	1073
NOS100/250-90-2-05	280S-M	90	2900	N9	B160	100	125	3-400	90	1684	1071	1870	403	683	350	3	1840	320	730	670	29	1097
NOS125/200-55-2-05	250S-M	55	2900	N7	B140	125	150	3-400	90	1397	784	1470	353	668	280	3	1440	250	610	550	29	544
NOS125/200-75-2-05	280S-M	75	2900	N9	B160	125	150	3-400	90	1684	1071	1870	403	718	350	3	1840	320	730	670	29	1082
NOS125/200-90-2-05	280S-M	90	2900	N9	B160	125	150	3-400	90	1684	1071	1870	403	718	350	3	1840	320	730	670	29	1106
NOS125/200-110-2-05	315S-M	110	2900	N9	B160	125	150	3-400	90	1857	1244	1870	438	753	350	3	1840	320	730	670	29	1344

RANGE OF USE

Flow rate up to:	**1600 m³/h**
Mano. head up to:	**105 mCE**
Operating pressure:	**16 bar**
Temperature range:	**-20 to +120°C**
DN	**150 to 300**
MEI* de référence :	**≥ 0,10**

*Minimum Efficiency Index

NOES

SINGLE STAGE PUMPS ON BASES, EXTENSION RANGE

Heat exchange – Irrigation
Heating – Air conditioning
50Hz

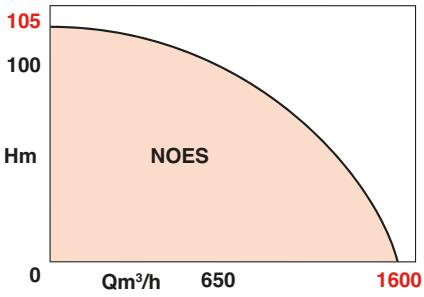

APPLICATIONS

- Heat exchange (thermal fluids, cooling water),
- Water supply,
- Irrigation,
- Water heating (VDI 2035),
- Air conditioning,
- Water treatment.

ADVANTAGES

- **Nominal pressure of 16 bars to cover all the applications.**
- **Shot graphite casting for increased resistance.**
- **Enhanced hydraulics for optimum output.**
- **Impeller adapted to each point (Q,H).**
- **Geometry of hydraulic inlet allowing for a low NPSH and cavitation reduction.**
- **Extremely high quality cast iron base for minimum vibration.**
- **Standard spacer for ease of maintenance.**

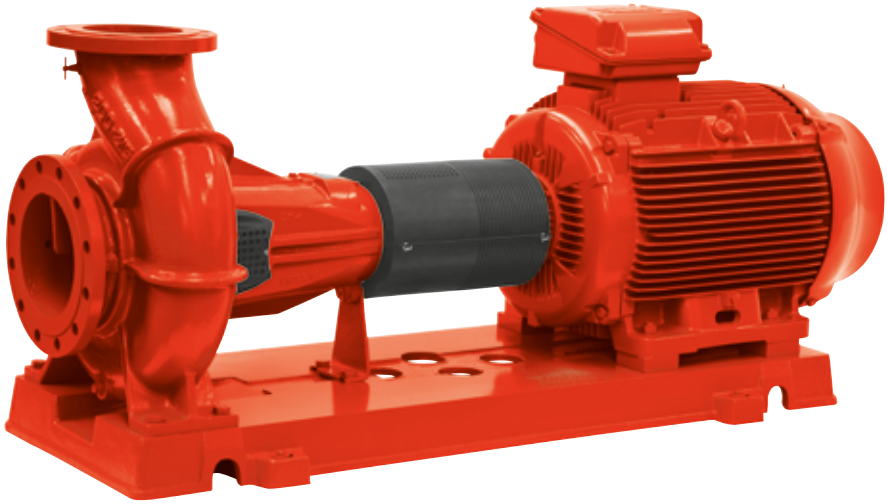

NOES

DESIGN

• Hydraulic section:

- Single-stage centrifugal pump, horizontal axis
Axial suction, upward radial discharge
. Replaceable wear rings.
- Mounting brackets under the body.
- Strengthened main bearings permanently lubricated with grease.
- Sealed with a simple mechanical seal or a cable gland with packing.
- Adaptation of the Impeller diameter to obtain the required operating point.
- Standard PTC sensors.
- PT100 optional.
- Optional take-off lines for temperature sensor and suction and discharge vibrations.

• Motor

Standardised according to I.E.C. and DIN/ VDE 0530

Speed:	4 pole - 1450 rev/min
Voltage:	3~400 V / 690 V
Frequency:	50 Hz - 60 Hz*
Insulation category:	155 (F)
Protection:	IP 55
CE conformity:	EN 809

* (contact us)

BASIC CONSTRUCTION

Main parts	Material
Pump housing	EN-GJS-500-7
Spiral	EN-GJS-500-7
Spiral base	EN-GJS-500-7
Impeller	EN-GJL-250 or G-CuSn10
Bearing	EN-GJL-250
Wear rings	G-CuSn10
Shaft	1.4028
Mechanical seal*	Carbon / SiC / EPDM

* Please consult us for other seals

IDENTIFICATION

NOES 300 / 400 - 90 / 4

- Pump code
- Discharge flange DN
- Max. Impeller diameter in mm
- Nominal motor power P2 in kW
- Number of poles

PRESELECTION HYDRAULIC RANGE

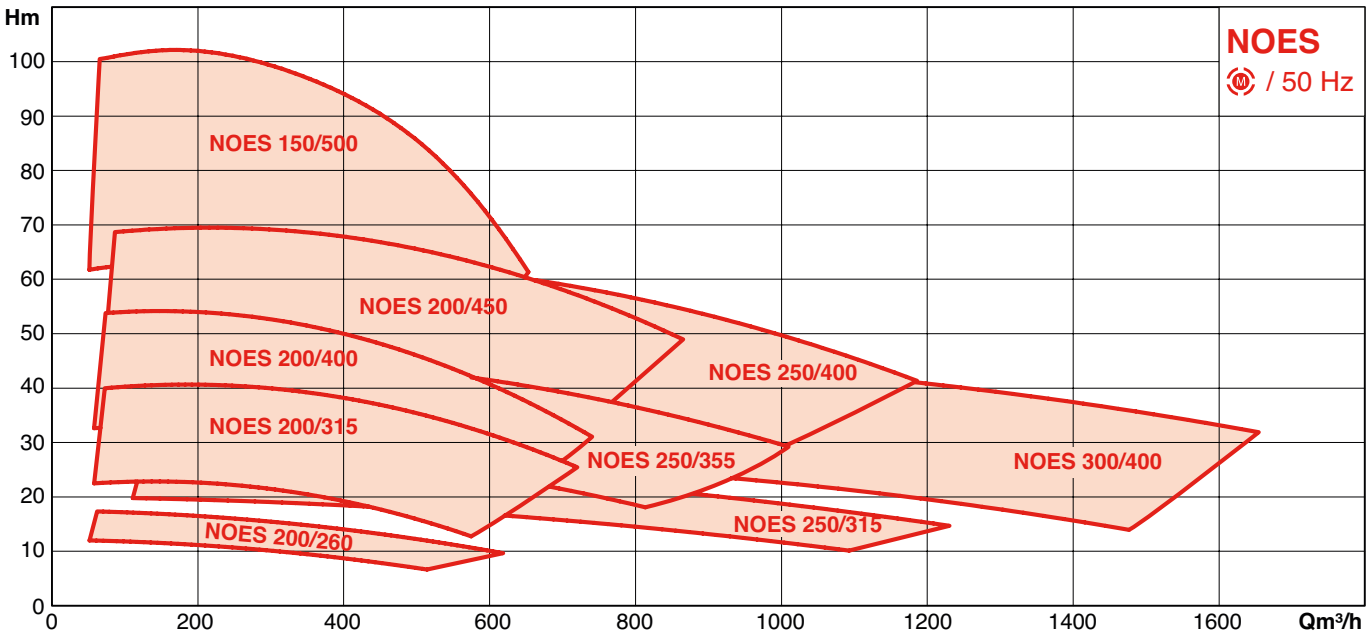

HYDRAULIC PERFORMANCES 4 POLE

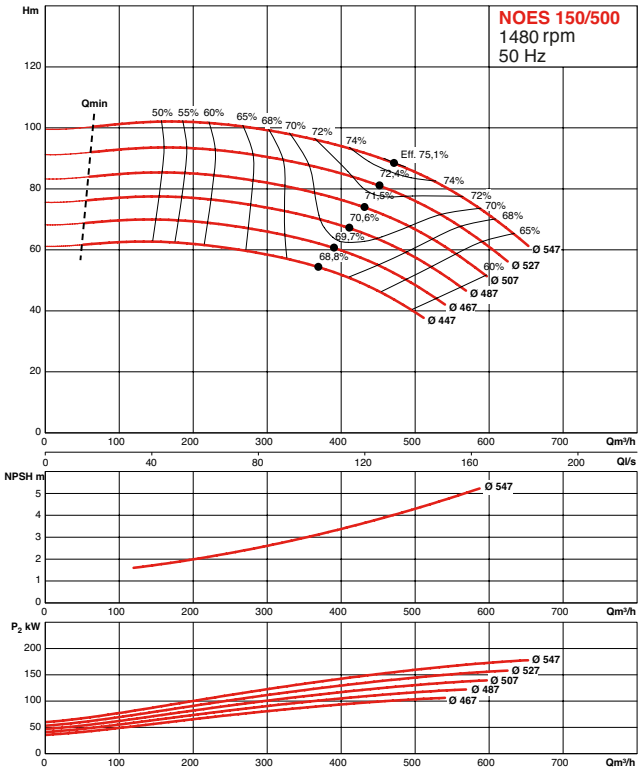

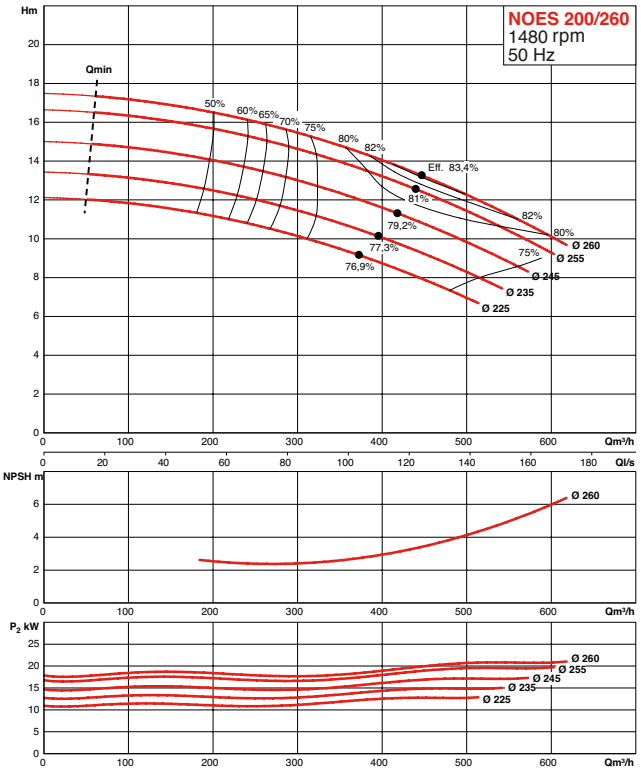

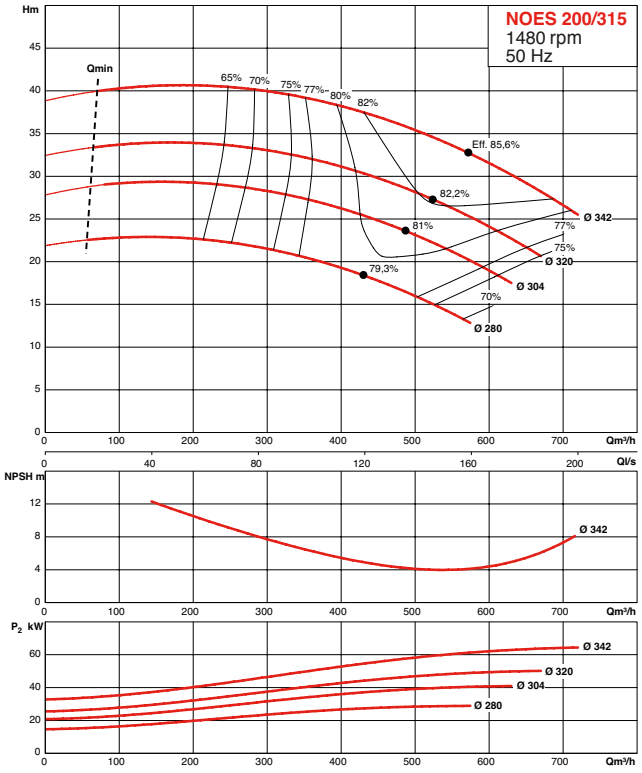

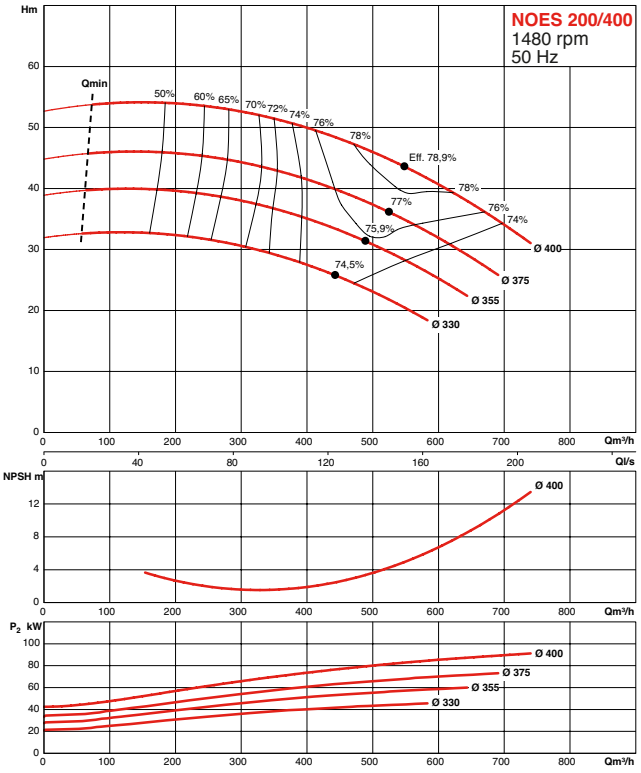

NOES

HYDRAULIC PERFORMANCES 4 POLE

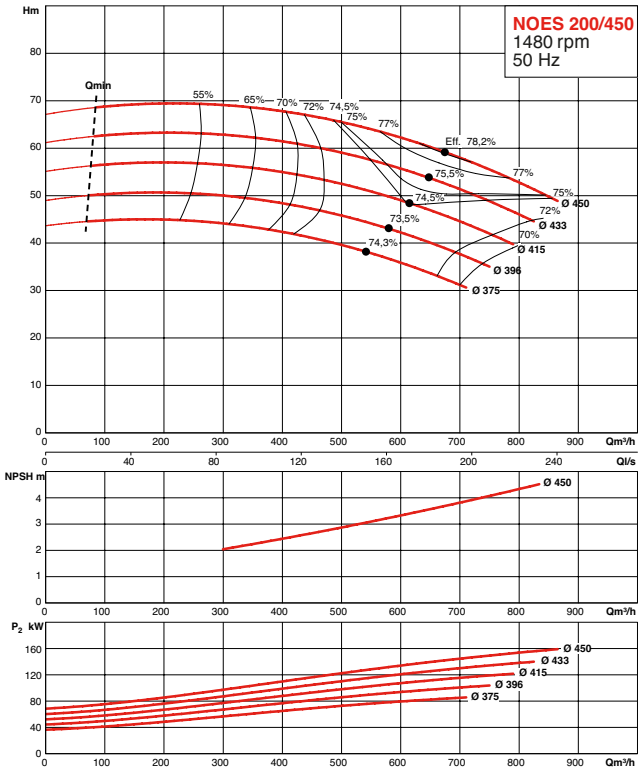

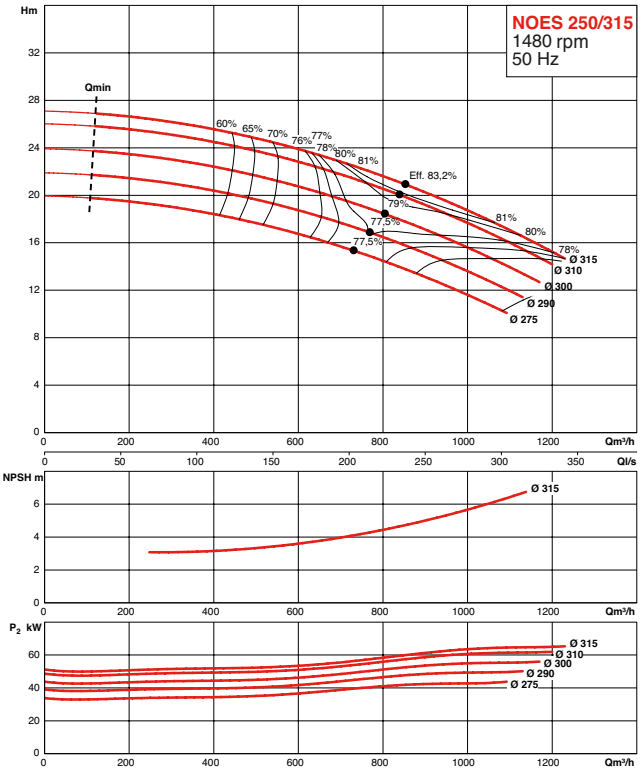

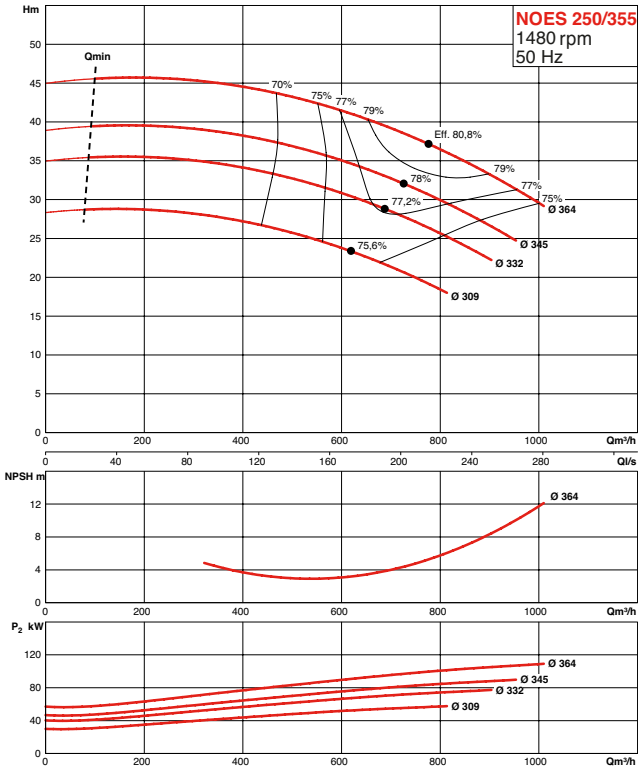

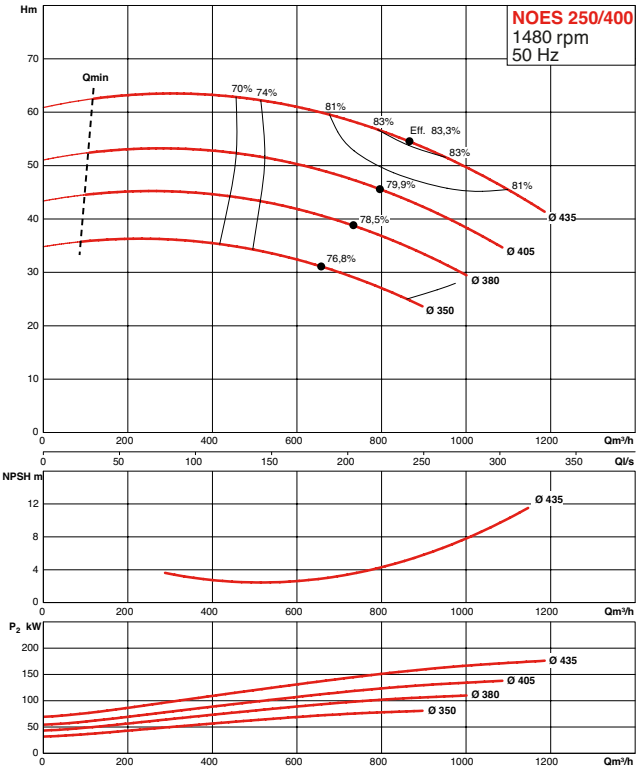

HYDRAULIC PERFORMANCES 4 POLE

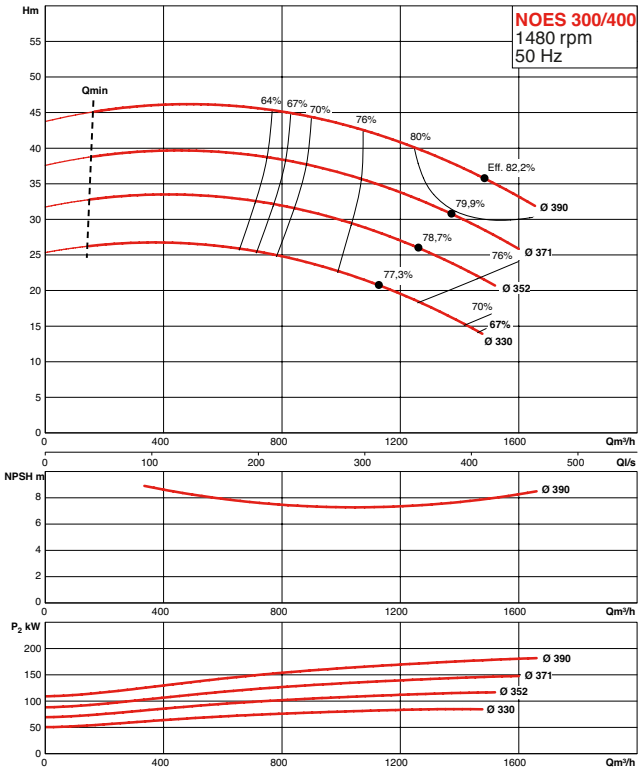

NOES

ELECTRICAL AND DIMENSIONAL CHARACTERISTICS

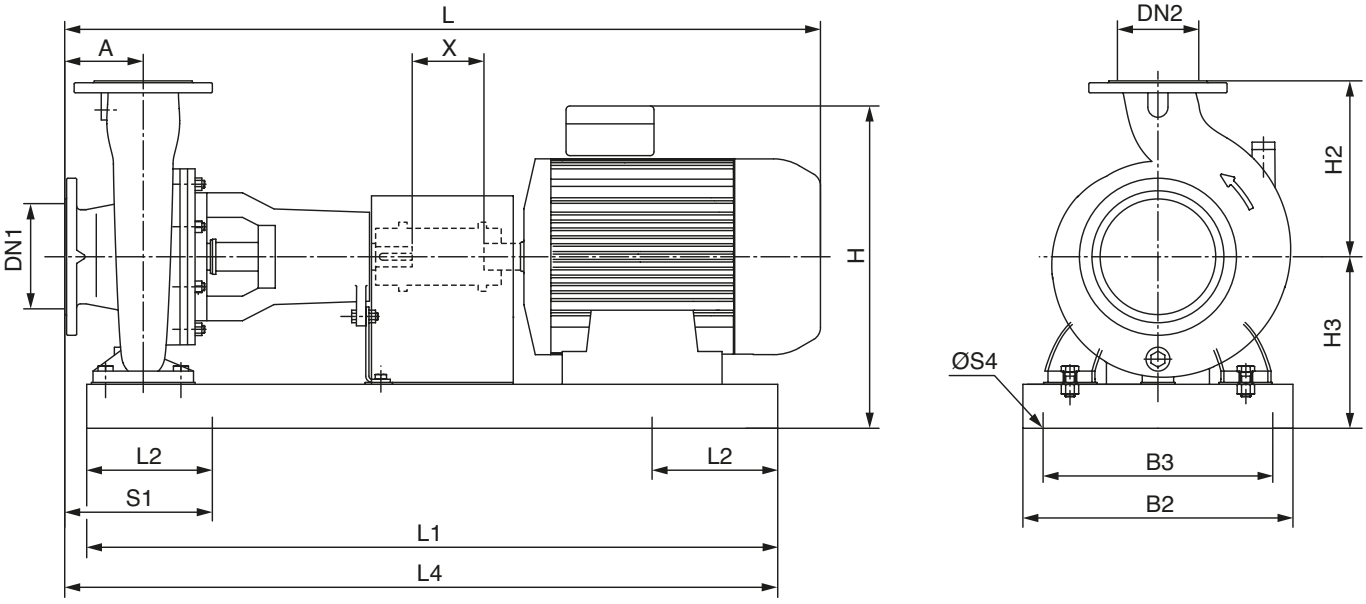

TYPE	Housing type	P2	Int.	Speed	Base	Coupl type	Voltage	PN	DN1	DN2	A	B2	B3	H	H2	H3	L	L1	L2	L4	S1	S4	X	Net mass
		kW	A	rpm			V		mm	mm	mm	mm	mm	mm	mm	mm	mm	mm	mm	mm	mm	mm	mm	kg
NOES150/500-110/4	315S	110	194	1450	N10	H200	3-400	PN16	200	150	170	860	790	1053	525	523	2294.5	2140	370	2180	410	29	180	1727
NOES150/500-132/4	315M	132	230	1450	N10	H200	3-400	PN16	200	150	170	860	790	1053	525	523	2294.5	2140	370	2180	410	29	180	1793
NOES150/500-160/4	315M	160	278	1450	N10	H200	3-400	PN16	200	150	170	860	790	1053	525	523	2294.5	2140	370	2180	410	29	180	1852
NOES150/500-200/4	315M	200	347	1450	N10	H200	3-400	PN16	200	150	170	860	790	1053	525	523	2294.5	2140	370	2180	410	29	180	2065
NOES150/500-75/4	280S	75	133	1450	N9	H180	3-400	PN16	200	150	170	730	670	995	525	523	2091.5	1840	320	1880	360	29	180	1421
NOES150/500-90/4	280M	90	158	1450	N9	H180	3-400	PN16	200	150	170	730	670	995	525	523	2091.5	1840	320	1880	360	29	180	1455
NOES200/260-15/4	160L	15	28.8	1450	N10	H125	3-400	PN16	200	200	245	860	790	623	395	423	1798.5	2140	370	2155	385	29	250	755
NOES200/260-18,5/4	180M	18,5	35.1	1450	N10	H125	3-400	PN16	200	200	245	860	790	671	395	423	1851.5	2140	370	2155	385	29	250	784
NOES200/260-22/4	180L	22	40.6	1450	N10	H125	3-400	PN16	200	200	245	860	790	671	395	423	1851.5	2140	370	2155	385	29	250	792
NOES200/260-30/4	200L	30	55.7	1450	N10	H125	3-400	PN16	200	200	245	860	790	684	395	423	1887.5	2140	370	2155	385	29	250	841
NOES200/315-37/4	225M	37	69	1450	N9	H140	3-400	PN16	250	200	180	730	670	717	450	438	1804	1840	320	1890	370	29	180	870
NOES200/315-45/4	225M	45	83.3	1450	N9	H140	3-400	PN16	250	200	180	730	670	717	450	438	1804	1840	320	1890	370	29	180	907
NOES200/315-55/4	250M	55	97.1	1450	N9	H160	3-400	PN16	250	200	180	730	670	698	450	438	1823	1840	320	1890	370	29	180	931
NOES200/315-75/4	280S	75	133	1450	N9	H180	3-400	PN16	250	200	180	730	670	910	450	438	2110	1840	320	1890	370	29	180	1296
NOES200/315-90/4	280M	90	158	1450	N9	H180	3-400	PN16	250	200	180	730	670	910	450	438	2110	1840	320	1890	370	29	180	1330
NOES200/400-110/4	315S	110	194	1450	N10	H200	3-400	PN16	250	200	180	860	790	1053	425	523	2279	2140	370	2140	370	29	180	1617
NOES200/400-45/4	225M	45	83.3	1450	N9	H140	3-400	PN16	250	200	180	730	670	802	425	523	1770	1840	320	1840	320	29	180	922
NOES200/400-55/4	250M	55	97.1	1450	N9	H160	3-400	PN16	250	200	180	730	670	808	425	523	1789	1840	320	1840	320	29	180	946
NOES200/400-75/4	280S	75	133	1450	N9	H180	3-400	PN16	250	200	180	730	670	995	425	523	2076	1840	320	1840	320	29	180	1311
NOES200/400-90/4	280M	90	158	1450	N9	H180	3-400	PN16	250	200	180	730	670	995	425	523	2076	1840	320	1840	320	29	180	1345
NOES200/450-110/4	315S	110	194	1450	N10	H200	3-400	PN16	250	200	160	860	790	1003	450	473	2284	2140	370	2170	400	29	180	1667

ELECTRICAL AND DIMENSIONAL CHARACTERISTICS

TYPE	Housing type	P2	Int.	Speed	Base	Coupl. type	Voltage	PN	DN1	DN2	A	B2	B3	H	H2	H3	L	L1	L2	L4	S1	S4	X	Net mass
		kW	A	rpm			V		mm	mm	mm	mm	mm	mm	mm	mm	mm	mm	mm	mm	mm	mm	mm	kg
NOES200/450-132/4	315M	132	230	1450	N10	H200	3-400	PN16	250	200	160	860	790	1003	450	473	2284	2140	370	2170	400	29	180	1733
NOES200/450-160/4	315M	160	278	1450	N10	H200	3-400	PN16	250	200	160	860	790	1003	450	473	2284	2140	370	2170	400	29	180	1792
NOES200/450-200/4	315M	200	347	1450	N10	H200	3-400	PN16	250	200	160	860	790	1003	450	473	2284	2140	370	2170	400	29	180	2005
NOES200/450-90/4	280M	90	158	1450	N9	H180	3-400	PN16	250	200	160	730	670	945	450	473	2081	1840	320	1870	350	29	180	1395
NOES250/315-37/4	225M	37	69	1450	N10	ZR65	3-400	PN16	300	250	290	860	790	742	455	463	2105	2140	370	2200	430	29	300	1079
NOES250/315-45/4	225M	45	83.3	1450	N10	ZR65	3-400	PN16	300	250	290	860	790	742	455	463	2105	2140	370	2200	430	29	300	1079
NOES250/315-55/4	250M	55	97.1	1450	N10	125-6	3-400	PN16	300	250	290	860	790	723	455	463	2124	2140	370	2200	430	29	300	1070
NOES250/315-75/4	280S	75	133	1450	N10	140-6	3-400	PN16	300	250	290	860	790	935	455	463	2411	2140	370	2200	430	29	300	1435
NOES250/315-90/4	280M	90	158	1450	N10	140-6	3-400	PN16	300	250	290	860	790	935	455	463	2411	2140	370	2200	430	29	300	1469
NOES250/355-110/4	315S	110	194	1450	N10	H200	3-400	PN16	300	250	250	860	790	1003	475	473	2373	2140	370	2205	435	29	180	1652
NOES250/355-132/4	315M	132	230	1450	N10	H200	3-400	PN16	300	250	250	860	790	1003	475	473	2373	2140	370	2205	435	29	180	1718
NOES250/355-55/4	250M	55	97.1	1450	N10	H160	3-400	PN16	300	250	250	860	790	733	475	473	1883	2140	370	2205	435	29	180	1031
NOES250/355-75/4	280S	75	133	1450	N10	H180	3-400	PN16	300	250	250	860	790	945	475	473	2170	2140	370	2205	435	29	180	1396
NOES250/355-90/4	280M	90	158	1450	N10	H180	3-400	PN16	300	250	250	860	790	945	475	473	2170	2140	370	2205	435	29	180	1430
NOES250/400-110/4	315S	110	194	1450	-	H200	3-400	PN16	300	250	240	700	640	1167	525	637	2600	2280	225	2290	235	24	250	2104
NOES250/400-132/4	315M	132	230	1450	-	H200	3-400	PN16	300	250	240	700	640	1167	525	637	2600	2280	225	2290	235	24	250	2140
NOES250/400-160/4	315M	160	278	1450	-	H200	3-400	PN16	300	250	240	700	640	1167	525	637	2600	2280	225	2290	235	24	250	2199
NOES250/400-200/4	315M	200	347	1450	-	H200	3-400	PN16	300	250	240	700	640	1167	525	637	2600	2280	225	2290	235	24	250	2413
NOES250/400-75/4	280S	75	133	1450	N10	H180	3-400	PN16	300	250	240	860	790	1005	525	533	2397	2140	370	2145	375	29	250	1797
NOES250/400-90/4	280M	90	158	1450	N10	H180	3-400	PN16	300	250	240	860	790	1005	525	533	2397	2140	370	2145	375	29	250	1831
NOES300/400-110/4	315S	110	194	1450	-	H200	3-400	PN16	350	300	280	700	640	1167	575	637	2650	2280	225	2330	275	24	250	2149
NOES300/400-132/4	315M	132	230	1450	-	H200	3-400	PN16	350	300	280	700	640	1167	575	637	2650	2280	225	2330	275	24	250	2185
NOES300/400-160/4	315M	160	278	1450	-	H200	3-400	PN16	350	300	280	700	640	1167	575	637	2650	2280	225	2330	275	24	250	2244
NOES300/400-200/4	315M	200	347	1450	-	H225	3-400	PN16	300	250	240	700	640	1167	525	637	2650	2280	225	2330	275	24	250	2478
NOES300/400-75/4	280S	75	133	1450	-	H180	3-400	PN16	350	300	280	700	640	1109	575	637	2447	2280	225	2330	275	24	250	1892
NOES300/400-90/4	280M	90	158	1450	-	H180	3-400	PN16	350	300	280	700	640	1109	575	637	2447	2280	225	2330	275	24	250	1926

NOES

FLANGE DIMENSION

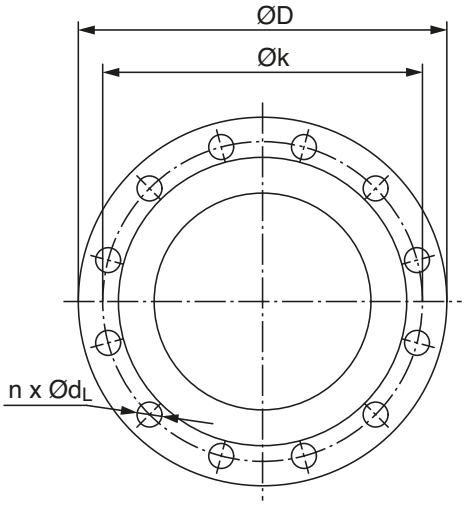

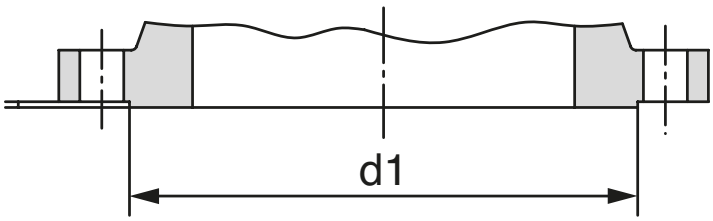

TYPE	SUCTION					DISCHARGE				
	Ø D	Ø k	n	Ø dL	d1	Ø D	Ø k	n	Ø dL	d1
NOES150/500-110/4	340	295	12	23	266	285	240	8	23	211
NOES150/500-132/4	340	295	12	23	266	285	240	8	23	211
NOES150/500-160/4	340	295	12	23	266	285	240	8	23	211
NOES150/500-200/4	340	295	12	23	266	285	240	8	23	211
NOES150/500-75/4	340	295	12	23	266	285	240	8	23	211
NOES150/500-90/4	340	295	12	23	266	285	240	8	23	211
NOES200/260-15/4	405	355	12	28	319	340	295	12	23	266
NOES200/260-18,5/4	405	355	12	28	319	340	295	12	23	266
NOES200/260-22/4	405	355	12	28	319	340	295	12	23	266
NOES200/260-30/4	405	355	12	28	319	340	295	12	23	266
NOES200/315-37/4	405	355	12	28	319	340	295	12	23	266
NOES200/315-45/4	405	355	12	28	319	340	295	12	23	266
NOES200/315-55/4	405	355	12	28	319	340	295	12	23	266
NOES200/315-75/4	405	355	12	28	319	340	295	12	23	266
NOES200/315-90/4	405	355	12	28	319	340	295	12	23	266
NOES200/400-110/4	405	355	12	28	319	340	295	12	23	266
NOES200/400-45/4	405	355	12	28	319	340	295	12	23	266
NOES200/400-55/4	405	355	12	28	319	340	295	12	23	266
NOES200/400-75/4	405	355	12	28	319	340	295	12	23	266
NOES200/400-90/4	405	355	12	28	319	340	295	12	23	266
NOES200/450-110/4	405	355	12	28	319	340	295	12	23	266
NOES200/450-132/4	405	355	12	28	319	340	295	12	23	266
NOES200/450-160/4	405	355	12	28	319	340	295	12	23	266
NOES200/450-200/4	405	355	12	28	319	340	295	12	23	266
NOES200/450-90/4	405	355	12	28	319	340	295	12	23	266
NOES250/315-110/4	460	410	12	28	370	405	355	12	28	319
NOES250/315-132/4	460	410	12	28	370	405	355	12	28	319
NOES250/315-37/4	460	410	12	28	370	405	355	12	28	319
NOES250/315-45/4	460	410	12	28	370	405	355	12	28	319
NOES250/315-55/4	460	410	12	28	370	405	355	12	28	319
NOES250/315-75/4	460	410	12	28	370	405	355	12	28	319
NOES250/315-90/4	460	410	12	28	370	405	355	12	28	319
NOES250/355-110/4	460	410	12	28	370	405	355	12	28	319
NOES250/355-132/4	460	410	12	28	370	405	355	12	28	319
NOES250/355-55/4	460	410	12	28	370	405	355	12	28	319
NOES250/355-75/4	460	410	12	28	370	405	355	12	28	319
NOES250/355-90/4	460	410	12	28	370	405	355	12	28	319
NOES250/400-110/4	460	410	12	28	370	405	355	12	28	319
NOES250/400-132/4	460	410	12	28	370	405	355	12	28	319
NOES250/400-160/4	460	410	12	28	370	405	355	12	28	319
NOES250/400-200/4	460	410	12	28	370	405	355	12	28	319
NOES250/400-75/4	460	410	12	28	370	405	355	12	28	319
NOES250/400-90/4	460	410	12	28	370	405	355	12	28	319
NOES300/400-110/4	520	470	16	28	429	460	410	12	28	370
NOES300/400-132/4	520	470	16	28	429	460	410	12	28	370
NOES300/400-160/4	520	470	16	28	429	460	410	12	28	370
NOES300/400-200/4	460	410	12	28	370	405	355	12	28	319
NOES300/400-75/4	520	470	16	28	429	460	410	12	28	370
NOES300/400-90/4	520	470	16	28	429	460	410	12	28	370

OPERATING LIMITS

Flow up to :	**3000 m³/h**
Head up to :	**140 m**
Operating pressure :	**4 à 16 bar***
Temperature range :	**–20° à +140°C***

* Depending on model

NOE - NOH

SINGLE STAGE PUMPS ON BASES
50 Hz

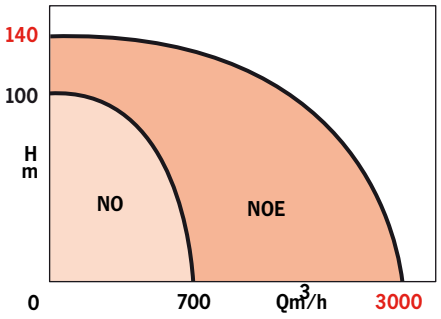

APPLICATIONS

- Water supply
- Irrigation
- Heating

- Air conditioning
- Water treatment
- Urban heating

…

ADVANTAGES

- **Coupling protection according to the recommendations of the European standard on the protection of machines.**
- **Spacer : The standard pumps are equipped with coupling with spacers allowing for the removal of the hydraulic unit without dismantling the motor and without detaching the pump from the piping.**
- **ACS certification available on certain models.**

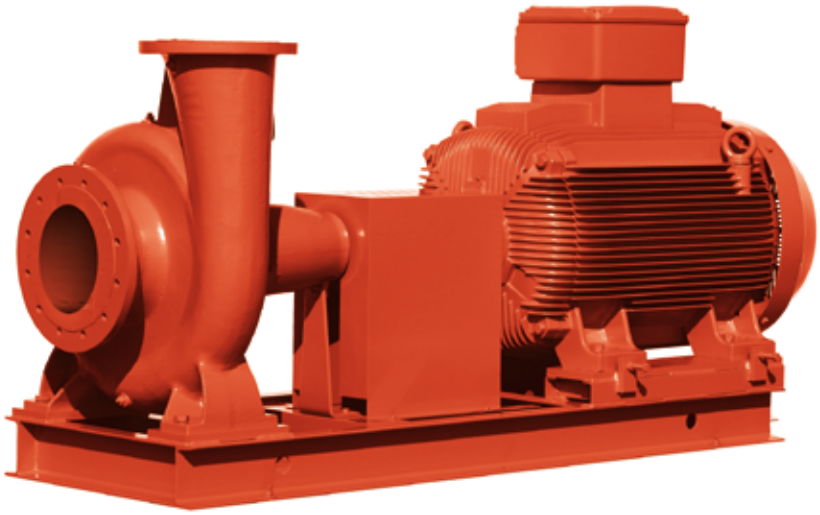

• Complete unit on base



Coupling with spacer allowing for the removal of the hydraulic unit without dismantling the motor and without detaching the pump from the piping

NOE - NOH

PRESELECTION HYDRAULIC RANGES

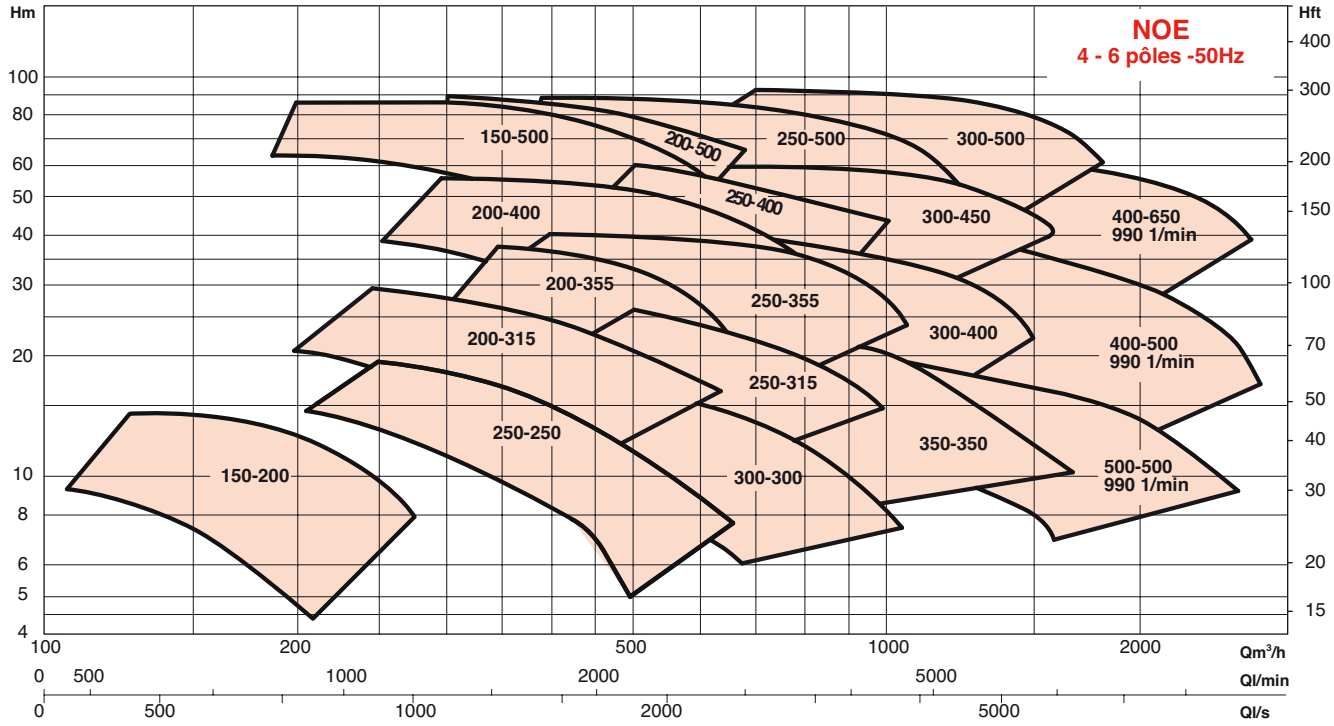

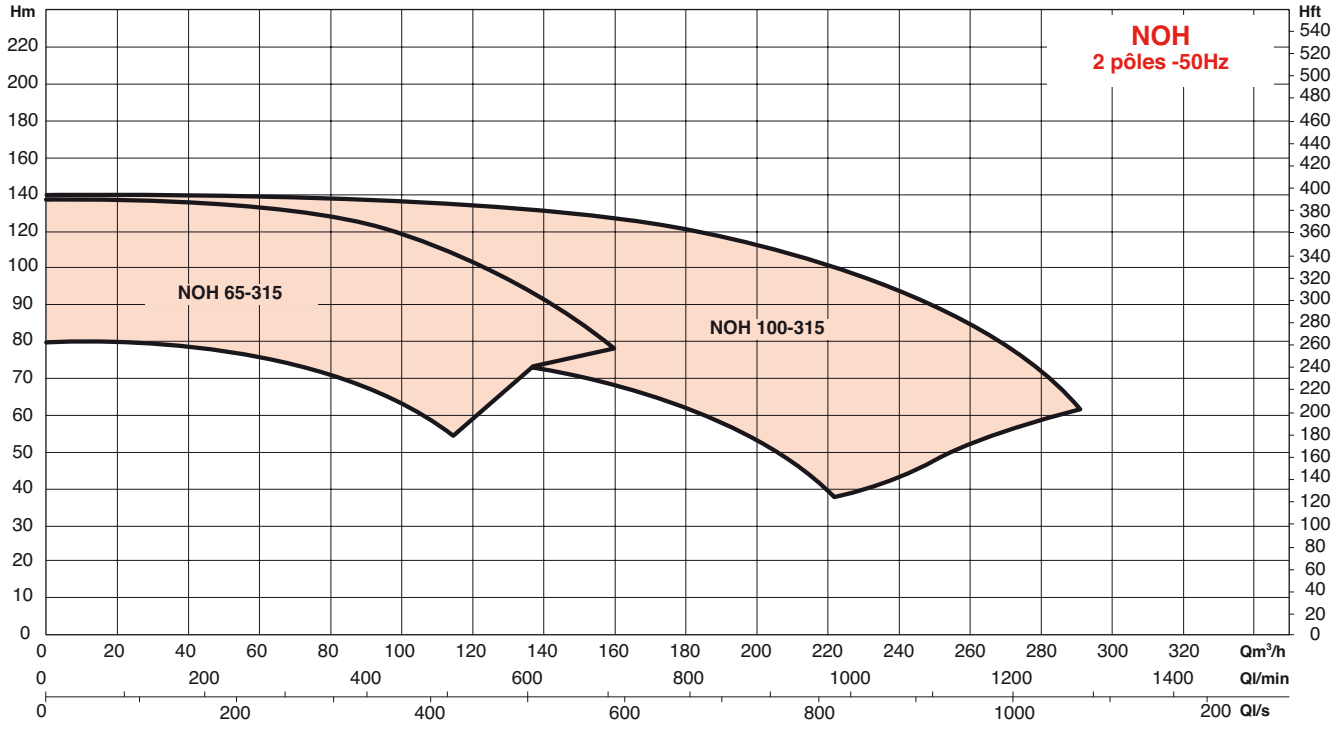

SCP

PUMP WITH AXIALLY SPLIT CASING
50 Hz

OPERATING RANGE

Flow rates up to:	**3000 m³/h***
Mano. head up to:	**170 m**
Max. operating pressure:	**16 to 25 bar****
	(others upon request)
Temperature range:	
Mechanical seal	**de -8°C to 120°C**
Max. braided packing.	**105°C**

*Extension up to 17 000 m³/h
** according to model

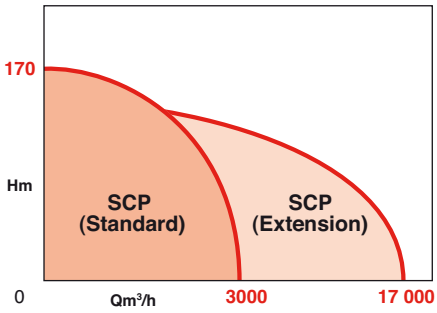

ADVANTAGES

- **The axially split casing design facilitates access to the rotating parts without having to dismantle the motor, bearings of hydraulic connections.**
- **The double suction concept reduces the NPSH required from the pump.**
- **The rotating elements (shaft + impeller) are balanced to minimise vibrations.**
- **Pump whose materials are compatible with the RoHS standard.**
- **Possibility of supplying with IE3 motor on request.**
- **CERAM CT treatment to improve pump output available as an option.**
- **Pump available on request in ACS version.**

APPLICATIONS

- Municipal water adduction
- Irrigation
- Urban heating and air conditioning
- Building sector
- Industry
- Power plants

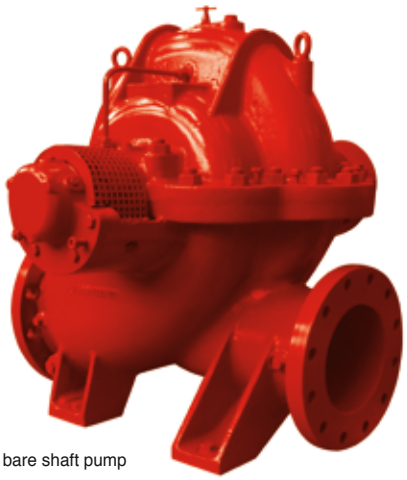

• bare shaft pump

• Complete pump on base

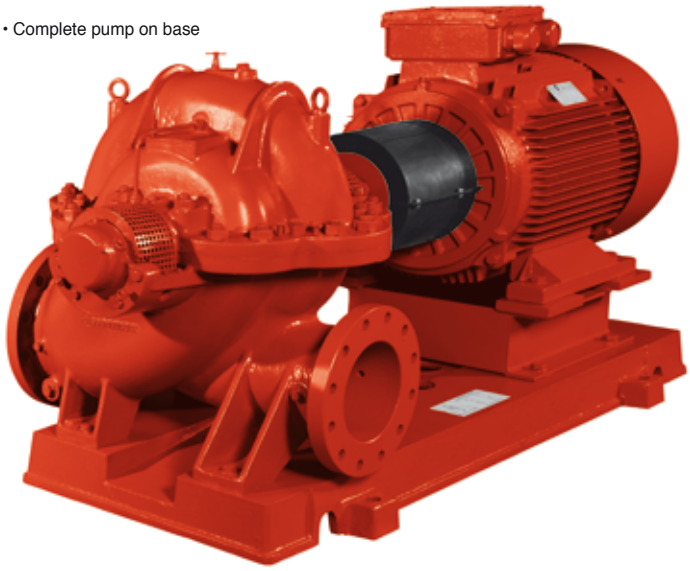

SCP

DESIGN

• Pump

- Centrifugal pumps with axially split casing.
- Horizontal shaft
- 1 or 2 speed models with single or double shell
- Models with in-line openings (excluding 2 speed)
- Watertight bearings with permanently greased ball bearings
- Mechanical seal assembled on shaft sleeve in same way as braided packing
- Standard rotation direction: clockwise with motor facing the pump (suction opening on the right). Opposition direction available as an option.
- Pump / motor connection with semi-flexible coupling

• Motor

High output IE2

Speed: 1450 – 980 rev/min

Frequency : 50 Hz (option 60 Hz)

BASIC CONSTRUCTION

Construction code	Description	Type	European standard	ASTM
R0	Body	Cast iron	EN GJL 250	A 48 CLASS 35
	Impeller	Cast iron	EN GJL 250	A 48 CLASS 35
	Shaft	Stainless steel	X12cr13	A 276 S 41000
	Wear rings	Bronze	G-Cu Sn10	B 427 C 90700
	Shaft sleeve	Stainless steel	X12cr13	A 276 S 41000
R1	Body	Cast iron	EN GJL 250	A 48 CLASS 35
	Impeller	Bronze	G-Cu Sn10	B 427 C 90700
	Shaft	Stainless steel	X12cr13	A 276 S 41000
	Wear rings	Bronze	G-Cu Sn10	B427 C 90700
	Shaft sleeve	Stainless steel	X12cr13	A 276 S 41000
R3	Body	Stainless steel	DIN17445 X6CrNiMo1810	A 743 Gr CF 8M
	Impeller	Stainless steel	DIN17445 X6CrNiMo1810	A 743 Gr CF 8M
	Shaft	Stainless steel	DIN 17006 X5CrNiMo1810	A 276 S 31600
	Wear rings	Stainless steel		
	Shaft sleeve	Stainless steel		
R4	Body	Ductile cast iron	DIN 1693 GGG50	A 536 60-45-12
	Impeller	Bronze	G- CuSn10	B 427 C 90700
	Shaft	Stainless steel	X12cr13	A 276 S 41000
	Wear rings	Bronze	G- CuSn10	B 427 C 90700
	Shaft sleeve	Stainless steel	X12cr13	A 276 S 41000

Other versions are available on request.

POSSIBLE CONFIGURATIONS

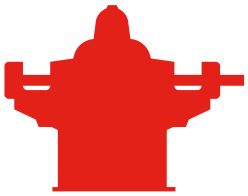

Bare shaft pump

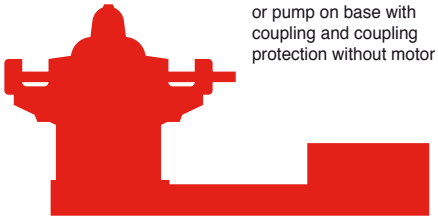

or pump on base with coupling and coupling protection without motor



or complete pump on base with electric motor.

IDENTIFICATION

SCPV 200 / 250 HAC - 110 / 4 / 6 / T4 - C1 / E0

Pump group
SCP: Horizontal / SCPV: vertical

Ø discharge

Optimum Ø size of impeller

Hydraulic type (HA/HB/HS/DS/DV)
(see table page 6)

C = only if rotation anti-clockwise
nothing = clockwise rotation

Motor power in kW
BS = bare shaft; WM = without motor

Number of poles
4 = 4 pole ; 6 = 6 pole

Frequency
nothing = 50Hz ; 6 = 60 Hz

Supply voltage
T4 = 400 V - 50 Hz ; 6kV = 6000 V

Construction code (see basic construction table above)

Imperviousness
(see imperviousness codification table page 3)

IMPERVIOUSNESS CODIFICATION

Code	Materials		Code DIN 24960				
	Friction surfaces	Joints					
E0	Carbon/Ceramic	EPDM	A	V	E	G	G
E1	Carbon/Silicon carbide	EPDM	A	Q1	E	G	G
E2	Silicon carbide/Silicon carbide	EPDM	Q1	Q1	E	G	G
E3	Carbon/Tungsten carbide	EPDM	A	U	E	G	G
EA	Carbon/Silicon carbide ACS	EPDM	A	Q1	E	G	G
V0	Carbon/Ceramic	VITON	A	V	V	G	G
V1	Carbon/Silicon carbide	VITON	A	Q1	V	G	G
V2	Silicon carbide/Carbide	VITON	Q1	Q1	V	G	G
V3	Carbon/Tungsten carbide	VITON	A	U	V	G	G
V4							
P0	Braided packing coated with graphite						

3D CROSS-SECTION (SINGLE-SPEED STANDARD PUMP)

Upper body
Removable (reduces stoppage time for maintenance)
Basic cast iron construction (other materials available on request)

Impeller
Double suction (hydraulic balancing)
Minimises axial thrust
Basic bronze construction
(other constructions possible)

Seal flush
Flushing
Optional settling cyclone

Bearings
Hydraulics supported by 2 bearings
(minimise shaft deflection)
Permanently greased bearings

Mechanical seals
Cable screws also available

Wear ring
Basic bronze construction
(other constructions possible)

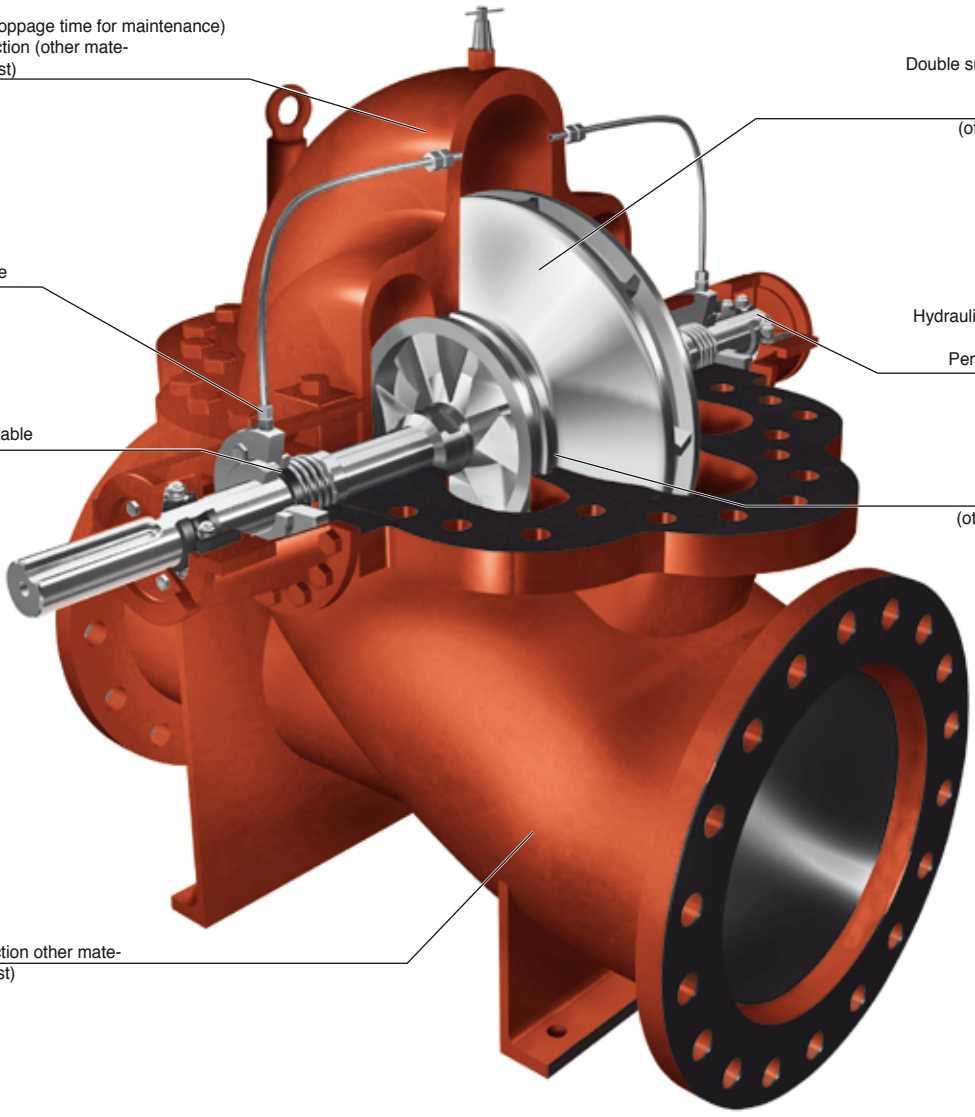

Lower body
Basic cast iron construction other materials available on request)

SCP

REPRESENTATIVE CROSS-SECTION (STANDARD SINGLE SPEED WITH MECHANICAL SEAL)

Number	Description
1001	Upper half body
1002	Lower half body
1181	Impeller joint
1500	Impeller
1800	Sleeve
2070	Shaft deflector
2100	Shaft sleeve
2402	Smooth bearing seal side
2420	Counterbalanced mechanical seale
2421	Mechanical seal lid
2600	Deep grooved ball bearing
2751	Interior bearing lid motor side
2754	Interior bearing lid opposite motor side
2761	Ball bearing housing motor side
2764	Ball bearing housing opposite motor side
2884	Ball bearing spacer
3001	Left press nut
3002	Right press nut
3010	Bearing nut
3020	Brake washer
3031	Counter nut on left shaft sleeve
3032	Counter nut on right shaft sleeve
3200	Impeller key
3250	Key
4230	Air purger
4250	O-ring
4580	Shaft protector

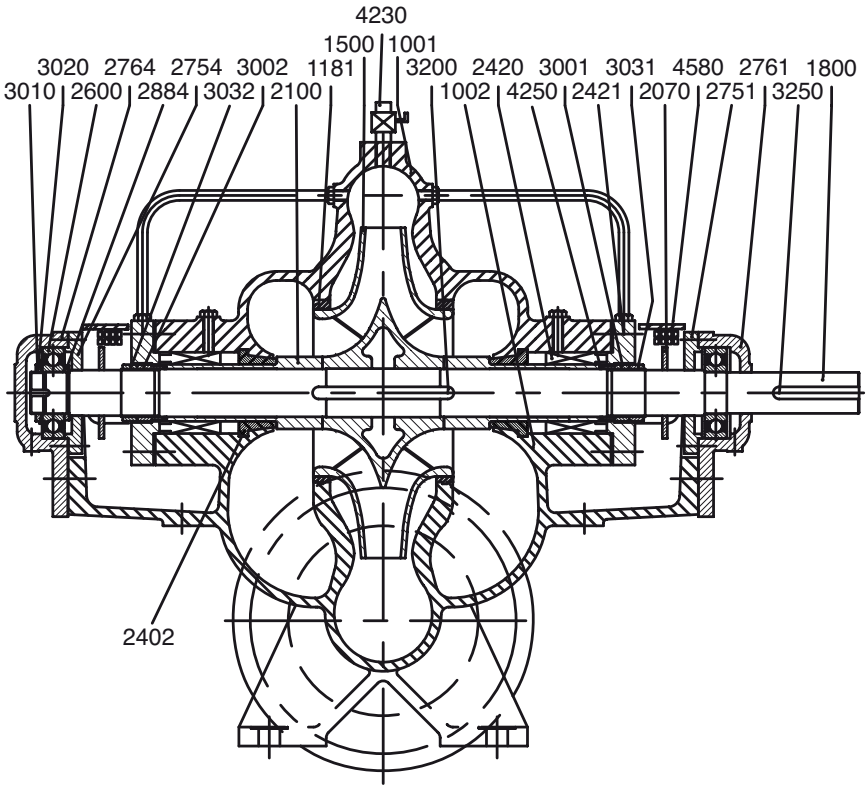

REPRESENTATIVE CROSS-SECTION (STANDARD SINGLE SPEED WITH BRAIDED PACKING)

Number	Description
1001	Upper half body
1002	Lower half body
1181	Impeller joint
1500	Impeller
1800	Sleeve
2070	Shaft deflector
2100	Shaft sleeve
2300	Cable screw lantern
2310	Gland
2402	Smooth bearing seal side
2410	Braid
2600	Deep grooved ball bearing
2751	Interior bearing lid motor side
2754	Interior bearing lid opposite motor side
2761	Ball bearing housing motor side
2764	Ball bearing housing opposite motor side
2884	Ball bearing spacer
3001	Left press nut
3002	Right press nut
3010	Bearing nut
3020	Brake washer
3031	Counter nut on left shaft sleeve
3032	Counter nut on right shaft sleeve
3200	Impeller key
3250	Key
4230	Air purger
4250	O-ring
4580	Shaft protector

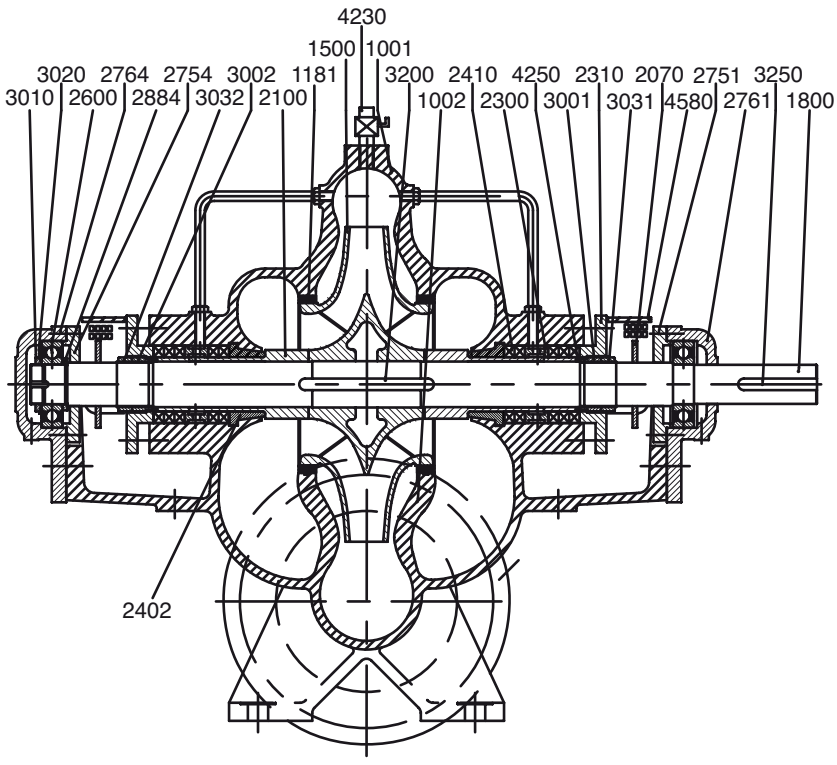

REPRESENTATIVE CROSS-SECTION (DOUBLE SPEED WITH MECHANICAL SEAL)

Number	Description
1001	Upper half body
1002	Lower half body
1100	Impeller spacer
1181	Impeller joint
1215	Lower body
1503	1st speed right impeller
1504	2nd speed right impeller
1800	Sleeve
2070	Shaft deflector
2100	Shaft sleeve
2311	Mechanical seal lid
2402	Smooth bearing seal side
2411	Mechanical seal
2600	Deep grooved ball bearing
2751	Interior bearing lid motor side
2754	Interior bearing lid opposite motor side
2755	Interior bearing lid
2760	Ball bearing housing
2801	Intermediate smooth bearing
2884	Ball bearing spacer
3001	Left press nut
3002	Right press nut
3011	Bearing nut
3020	Brake washer
3031	Counter nut on left shaft sleeve
3032	Counter nut on right shaft sleeve
3200	Impeller key
3250	Key
4230	Air purger
4250	O-ring
4290	Mechanical seal watering tube
4580	Shaft protector

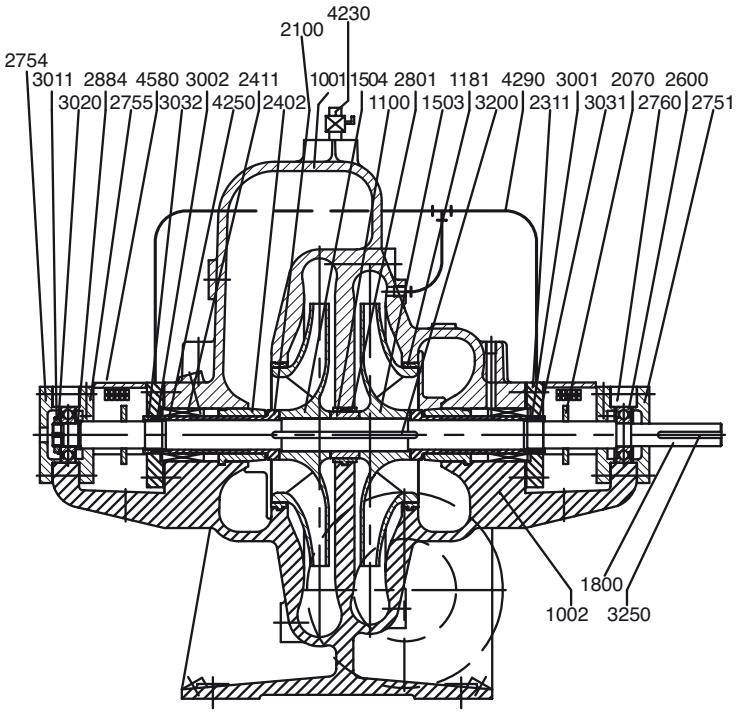

REPRESENTATIVE CROSS-SECTION (DOUBLE SPEED WITH BRAIDED PACKING)

Number	Description
1001	Upper half body
1002	Lower half body
1100	Impeller spacer
1181	Impeller joint
1503	1st speed right impeller
1504	2nd speed right impeller
1800	Sleeve
2070	Shaft deflector
2100	Shaft sleeve
2300	Cable screw lantern
2310	Gland
2402	Smooth bearing seal side
2410	Braid
2600	Deep grooved ball bearing
2751	Exterior bearing lid motor side
2754	Exterior bearing lid opposite motor side
2755	Interior bearing lid
2760	Ball bearing housing
2801	Intermediate smooth bearing
2884	Ball bearing spacer
3001	Left press nut
3002	Right press nut
3011	Bearing nut
3020	Brake washer
3031	Counter nut on left shaft sleeve
3032	Counter nut on right shaft sleeve
3200	Impeller key
3250	Key
4230	Air purger
4250	O-ring
4290	Braided packing watering tube
4580	Shaft protector

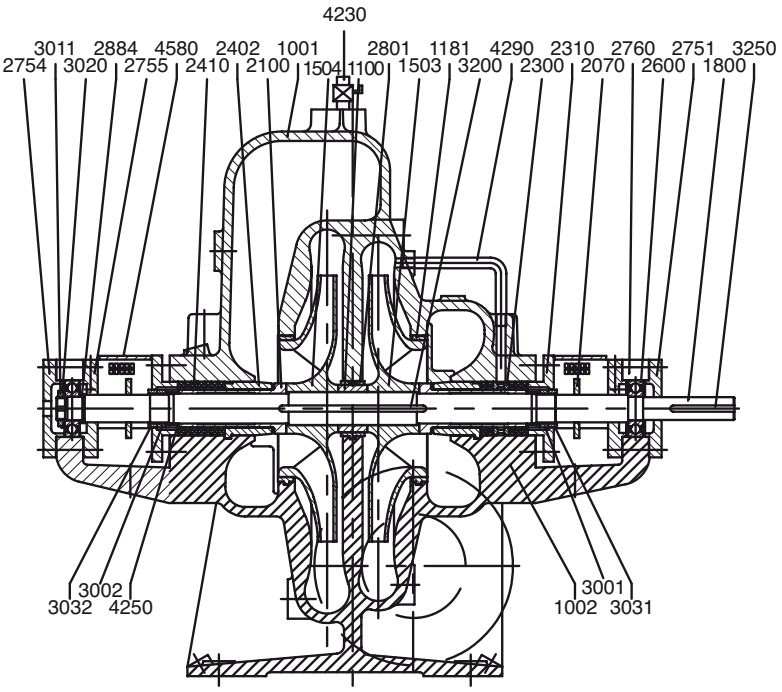

SCP

HYDRAULIC PRESELECTION RANGE - 50 HZ



Type	model
SCP 50-180 HA	Type A hydraulics
SCP 50-220 HA	Type A hydraulics
SCP 50-340 HA	Type A hydraulics
SCP 50-340 DS	Double stage pump
SCP 65-390 HS	Simple suction impeller
SCP 80-200 HA	Type A hydraulics
SCP 80-230 HA	Type A hydraulics
SCP 80-340 HA	Type A hydraulics
SCP 80-360 DS	Double stage pump
SCP 80-380 DS	Double stage pump
SCP 100-270 HA	Type A hydraulics
SCP 100-280 HA	Type A hydraulics
SCP 100-340 DS	Double stage pump
SCP 100-360 HA	Type A hydraulics
SCP 100-400 HA	Type A hydraulics
SCP 100-410 DS	Double stage pump
SCP 125-290 HA	Type A hydraulics
SCP 125-330 HA	Type A hydraulics
SCP 125-440 HA	Type A hydraulics
SCP 125-460 DS	Double stage pump
SCP 125-470 HA	Type A hydraulics
SCP 150-290 HA	Type A hydraulics
SCP 150-350 HA	Type A hydraulics

Type	model
SCP 150-390 HA	Type A hydraulics
SCP 150-440 HA	Type A hydraulics
SCP 150-460 DS	Double stage pump
SCP 150-530 HA	Type A hydraulics
SCP 150-580 HA	Type A hydraulics
SCP 200-310 HA	Type A hydraulics
SCP 200-320 HA	Type A hydraulics
SCP 200-360 HB	Type B hydraulics
SCP 200-370 HA	Type A hydraulics
SCP 200-390 HA	Type A hydraulics
SCP 200-440 HA	Type A hydraulics
SCP 200-460 HA	Type A hydraulics
SCP 200-480 HA	Type A hydraulics
SCP 200-550 HA	Type A hydraulics
SCP 200-560 HA	Type A hydraulics
SCP 200-660 DV	Double volute pump
SCP 250-250 HA	Type A hydraulics
SCP 250-360 HA	Type A hydraulics
SCP 250-390 HA	Type A hydraulics
SCP 250-450 HA	Type A hydraulics
SCP 250-570 HA	Type A hydraulics
SCP 250-700 DV	Double volute pump
SCP 250-740 DV	Double volute pump

Type	model
SCP 300-330 HB	Type B hydraulics
SCP 300-380 HA	Type A hydraulics
SCP 300-400 HA	Type A hydraulics
SCP 300-490 HA	Type A hydraulics
SCP 300-570 HA	Type A hydraulics
SCP 350-470 HA	Type A hydraulics
SCP 350-500 HA	Type A hydraulics
SCP 300-660 DV	Double volute pump
SCP 400-480 HA	Type A hydraulics
SCP 400-540 HA	Type A hydraulics
SCP 400-550 HA	Type A hydraulics
SCP 400-660 DV	Double volute pump
SCP 400-710 HA	Type A hydraulics A

HYDRAULIC PERFORMANCES - 50HZ

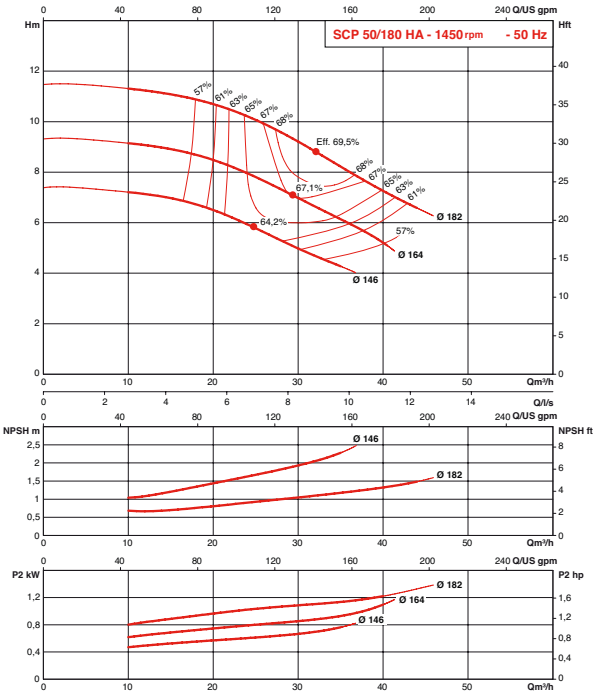

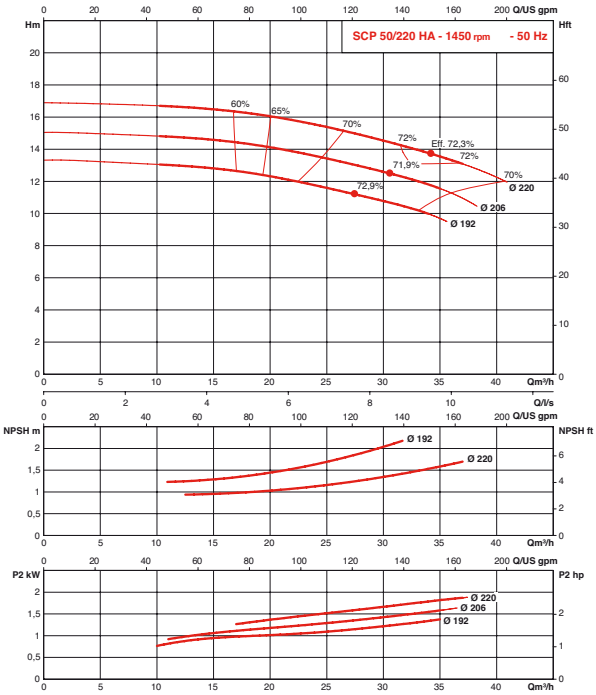

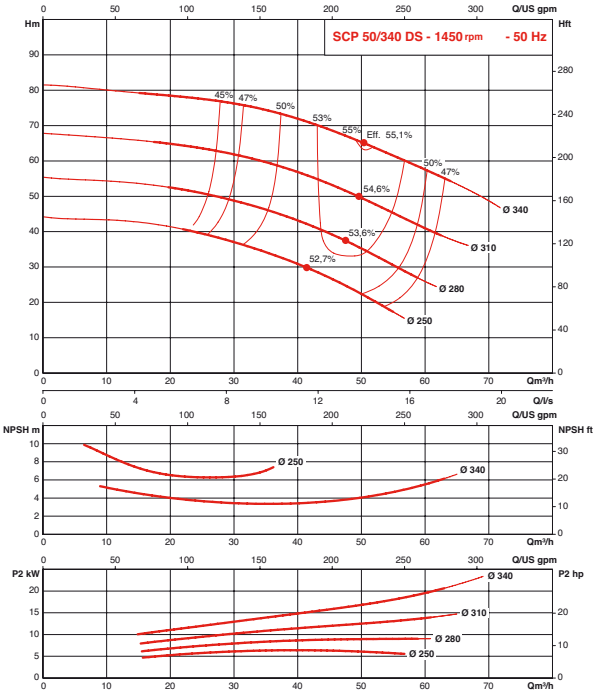

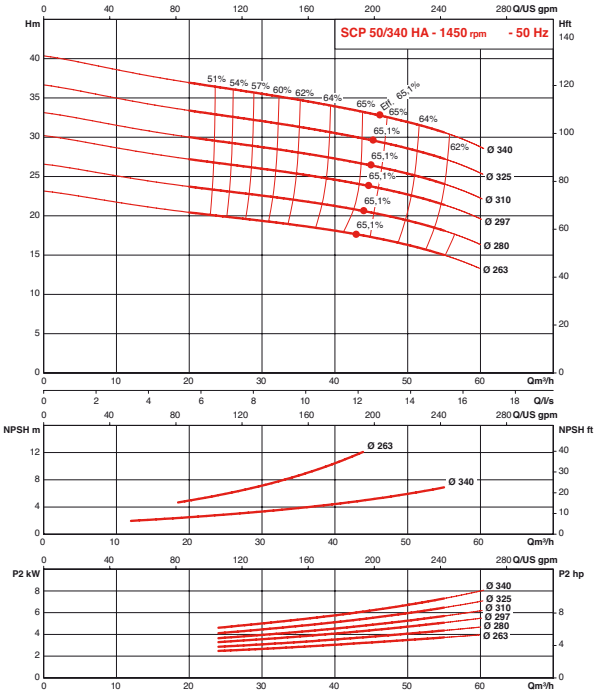

SCP

HYDRAULIC PERFORMANCES - 50HZ

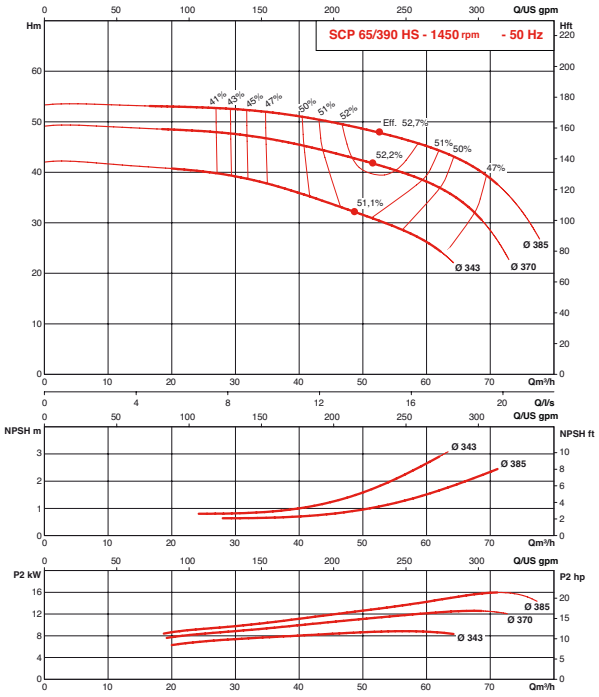

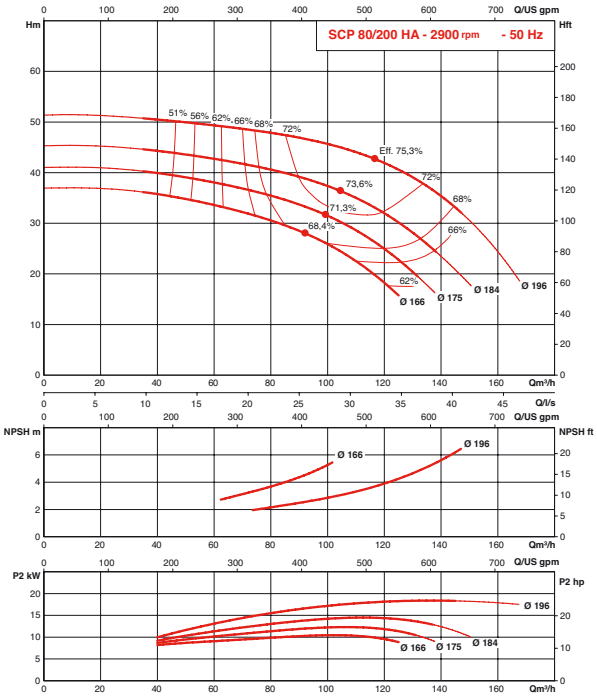

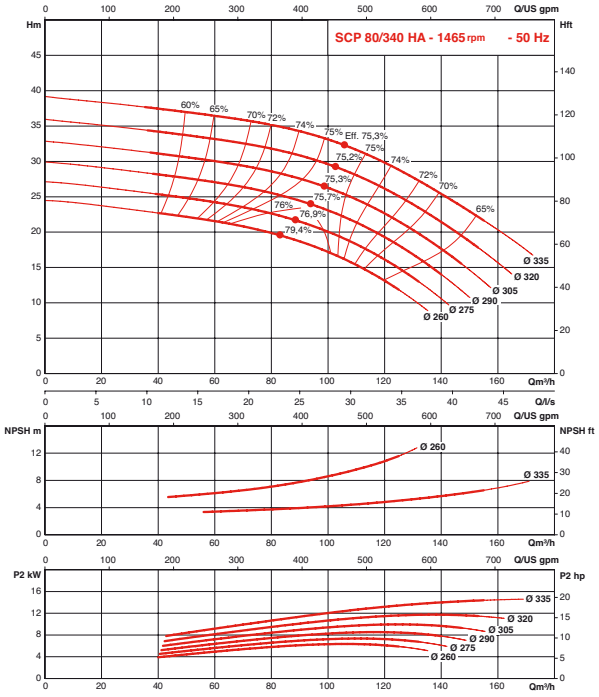

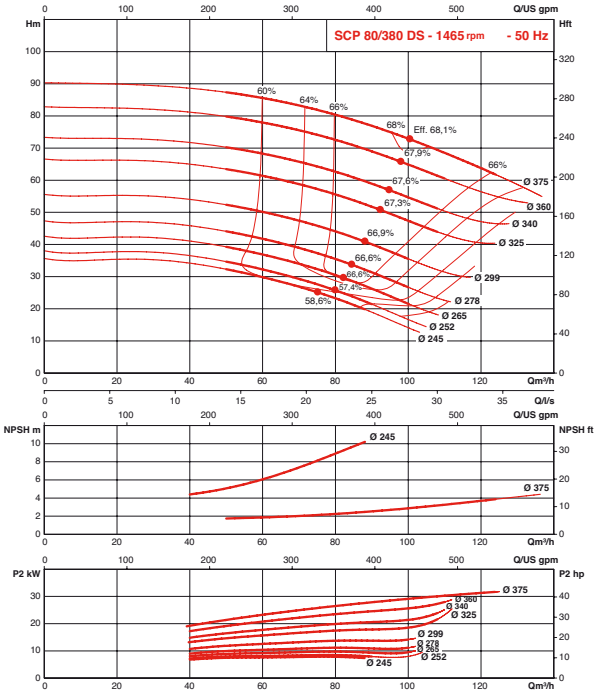

HYDRAULIC PERFORMANCES - 50HZ

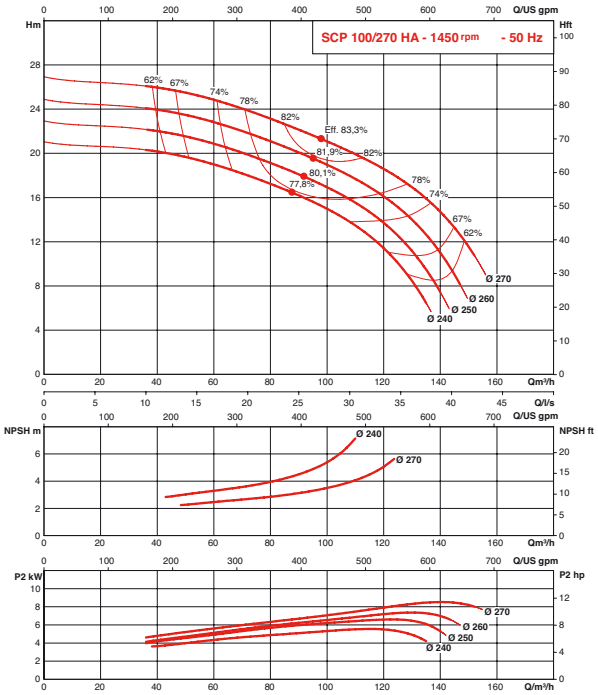

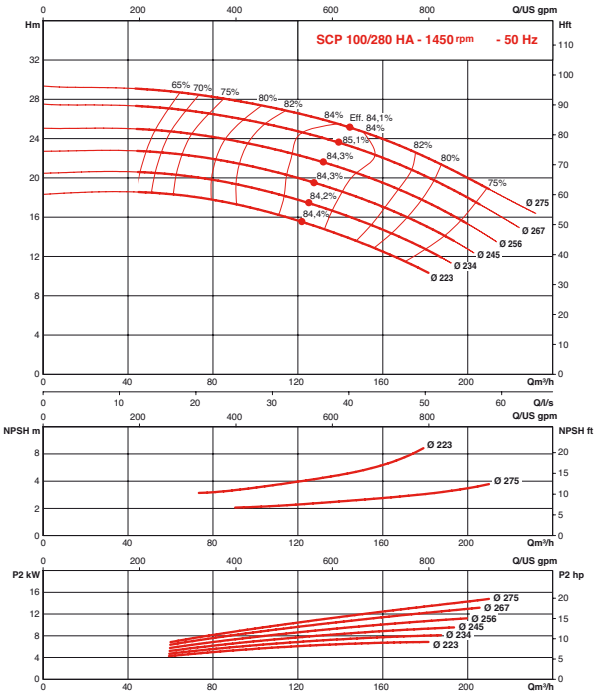

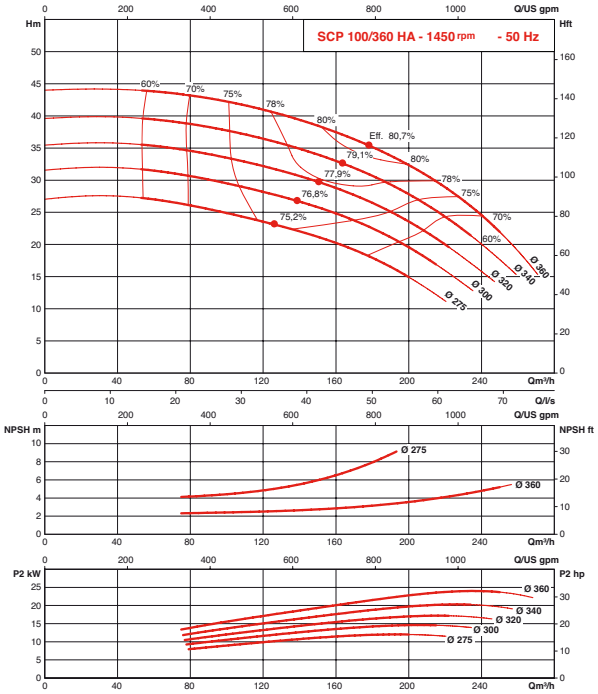

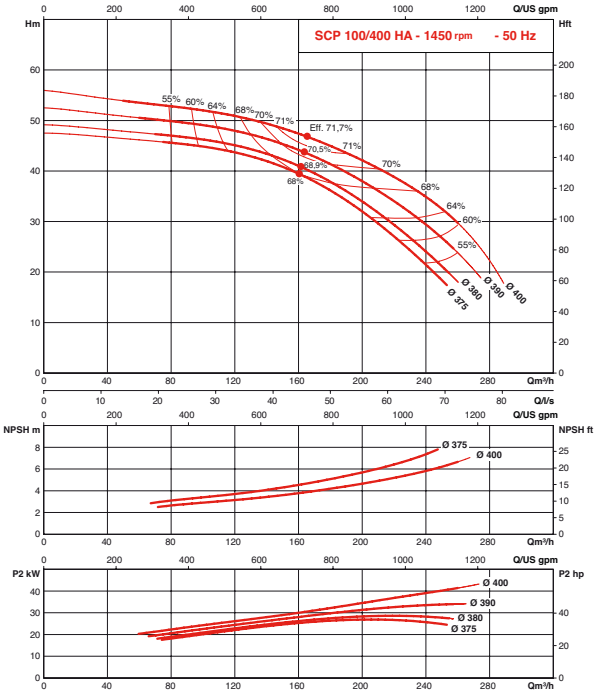

SCP

HYDRAULIC PERFORMANCES - 50HZ

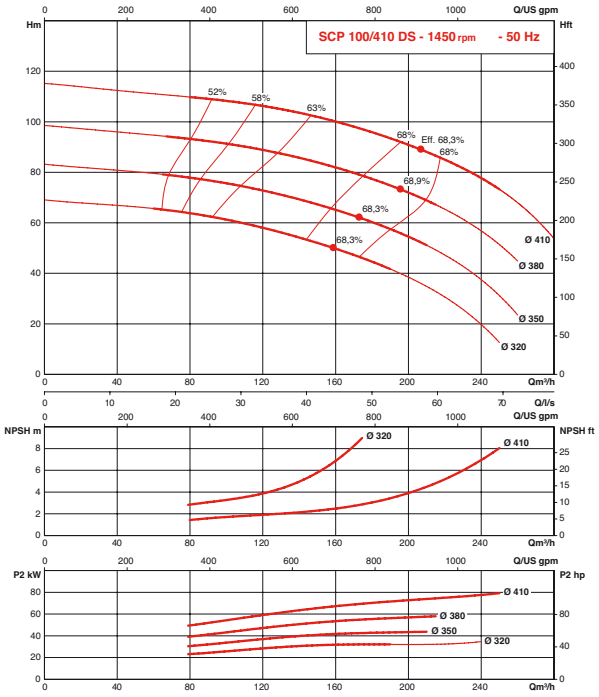

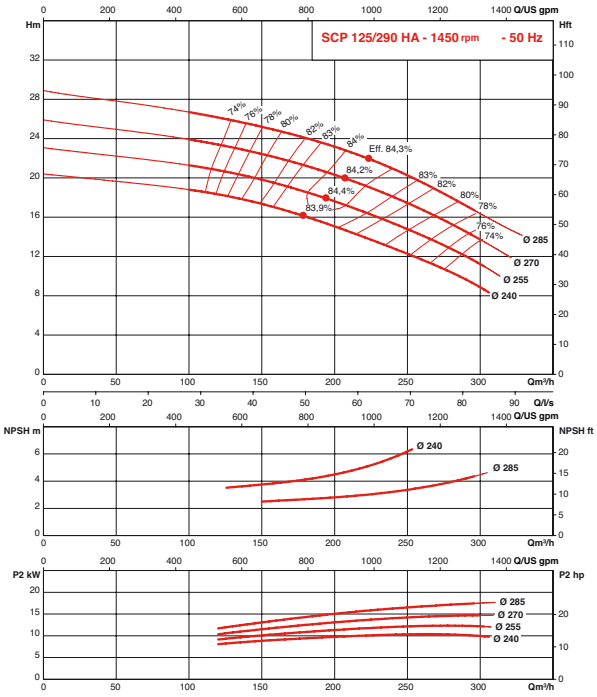

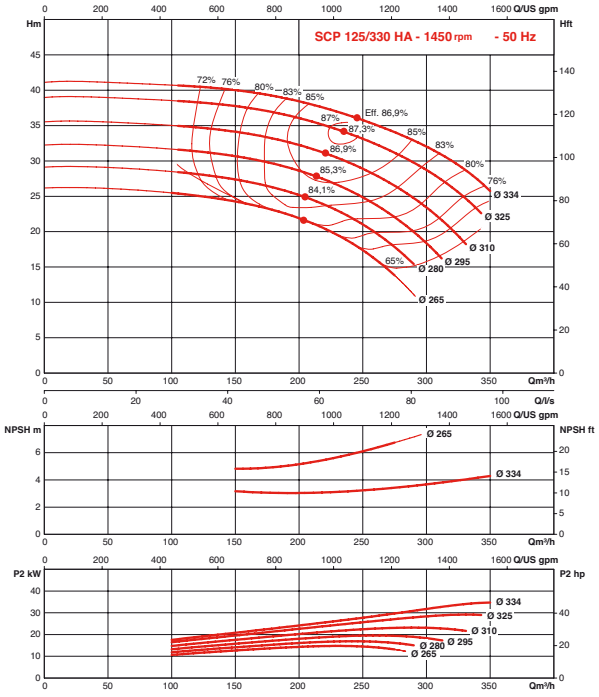

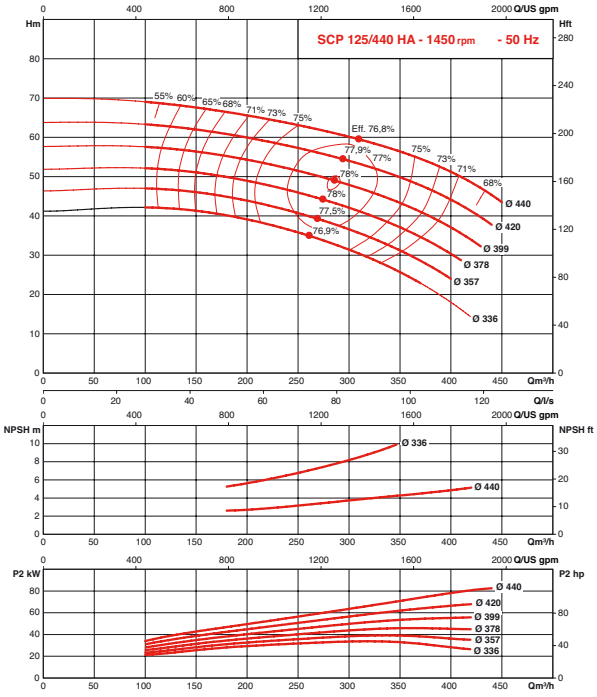

HYDRAULIC PERFORMANCES - 50HZ

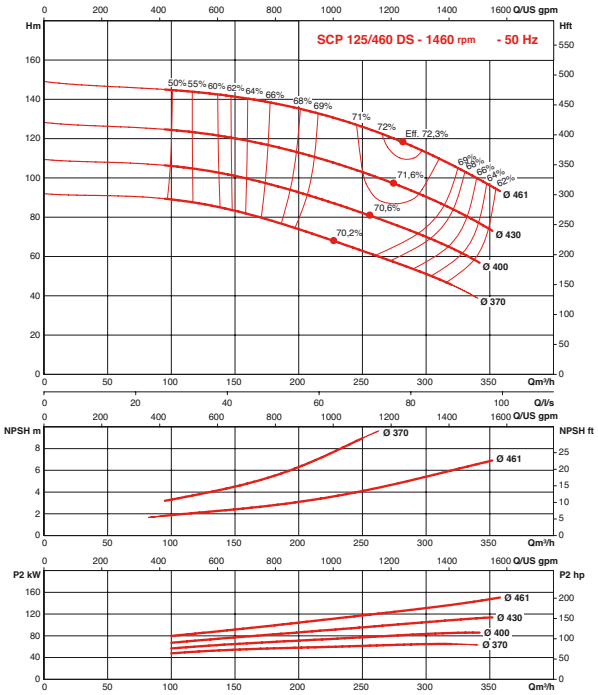

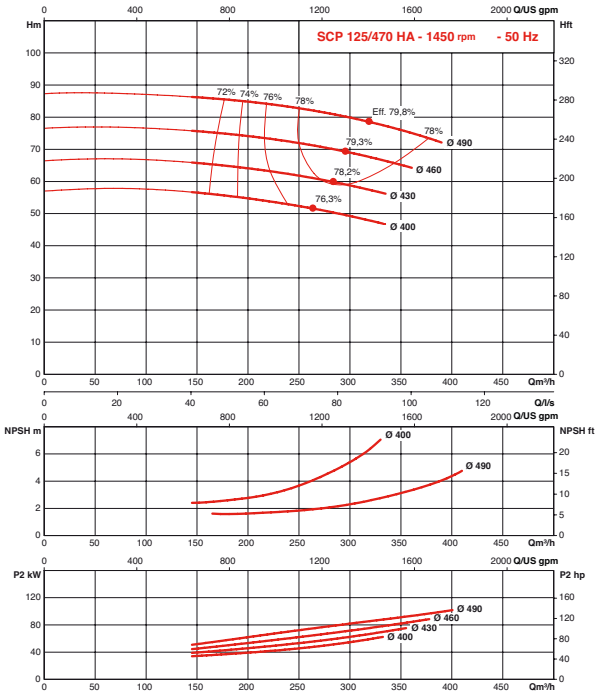

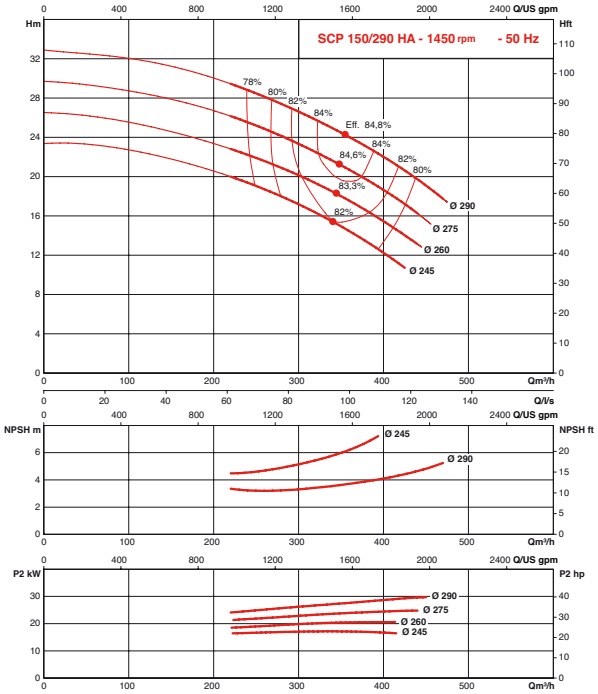

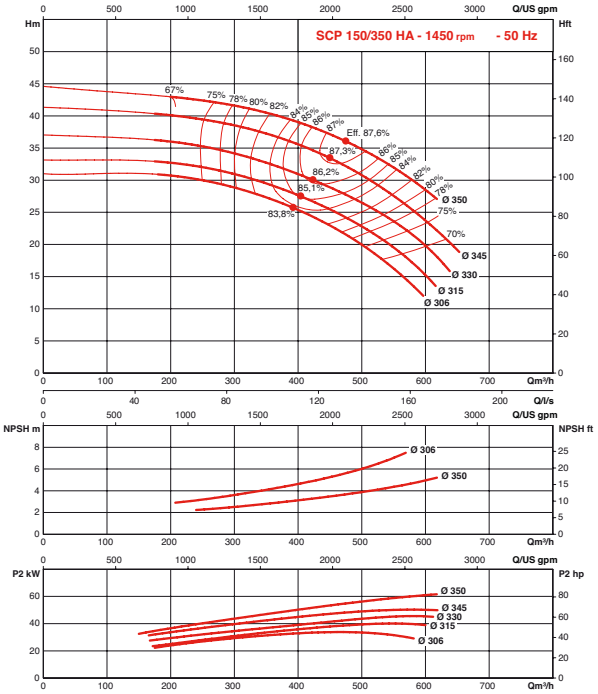

SCP

HYDRAULIC PERFORMANCES - 50HZ

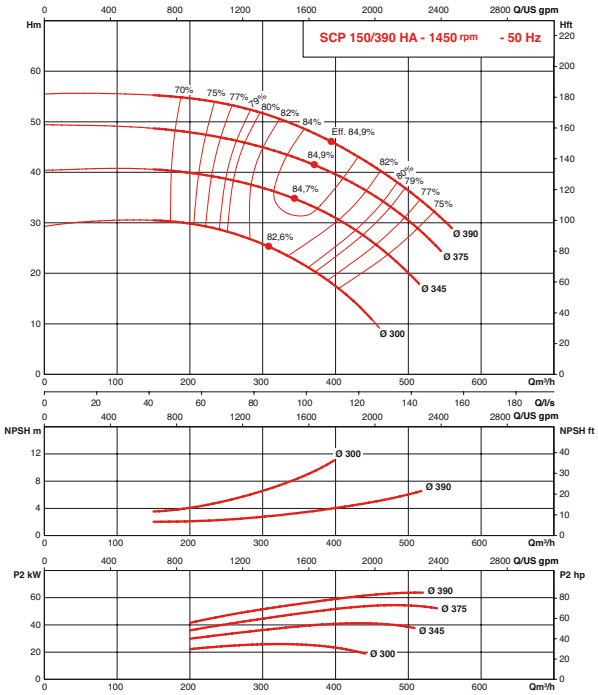

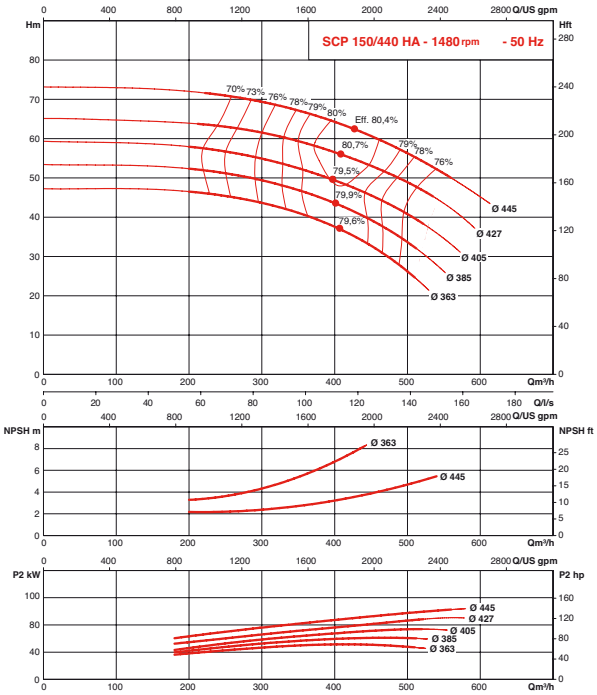

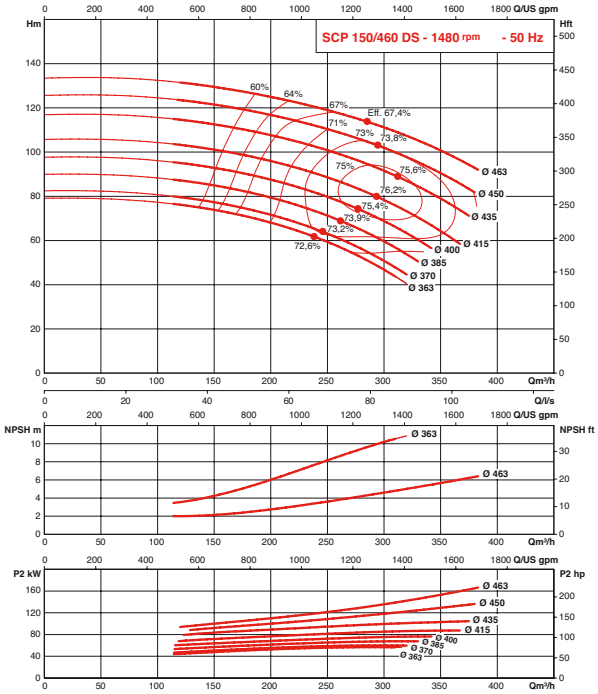

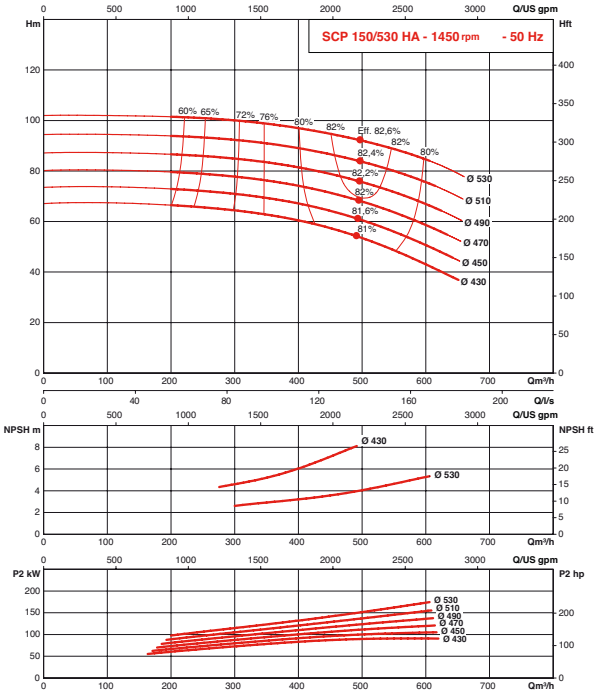

HYDRAULIC PERFORMANCES - 50HZ

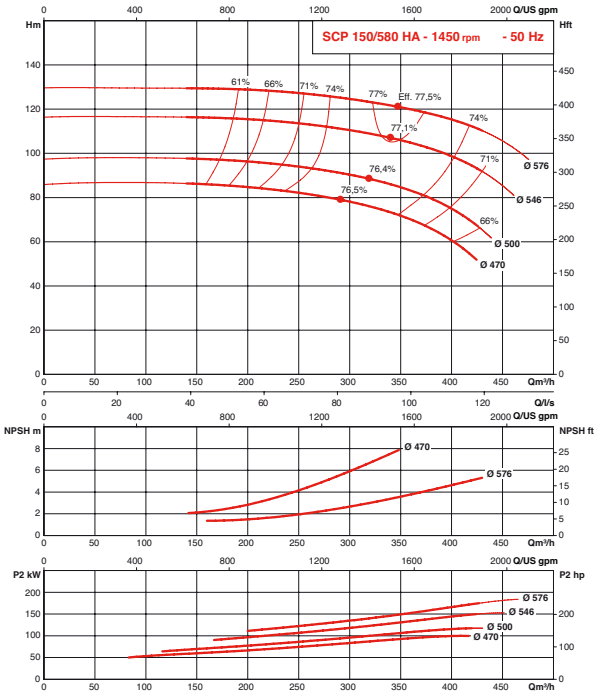

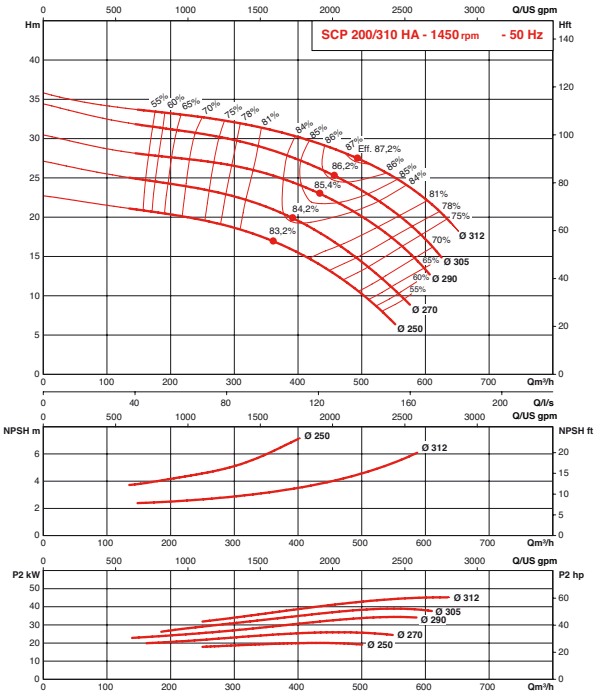

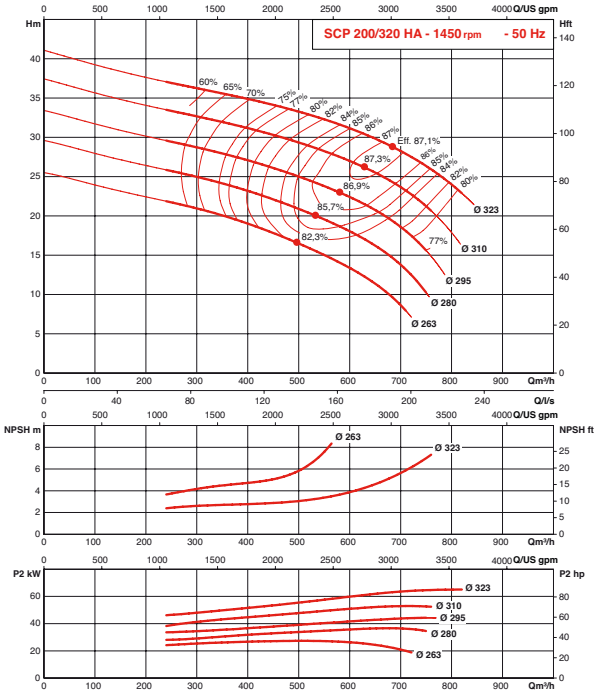

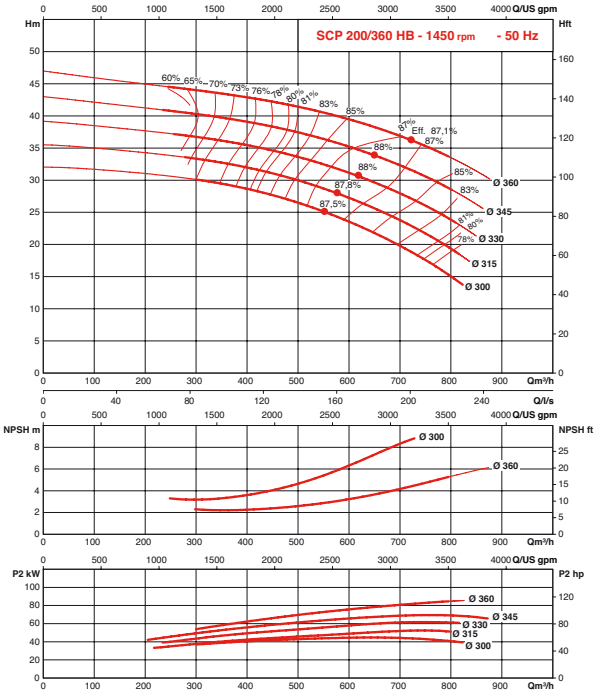

SCP

HYDRAULIC PERFORMANCES - 50HZ

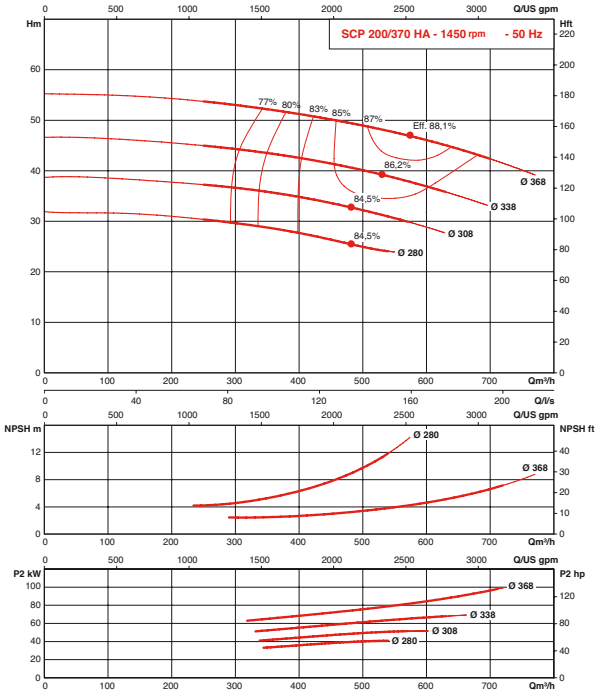

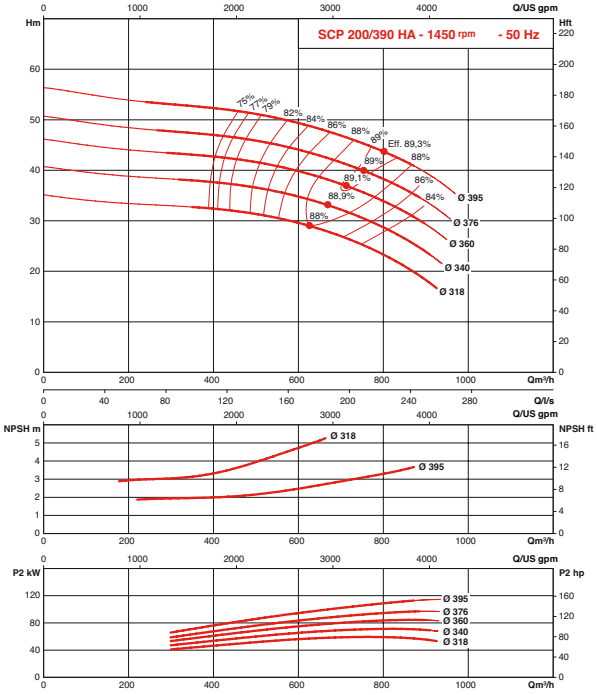

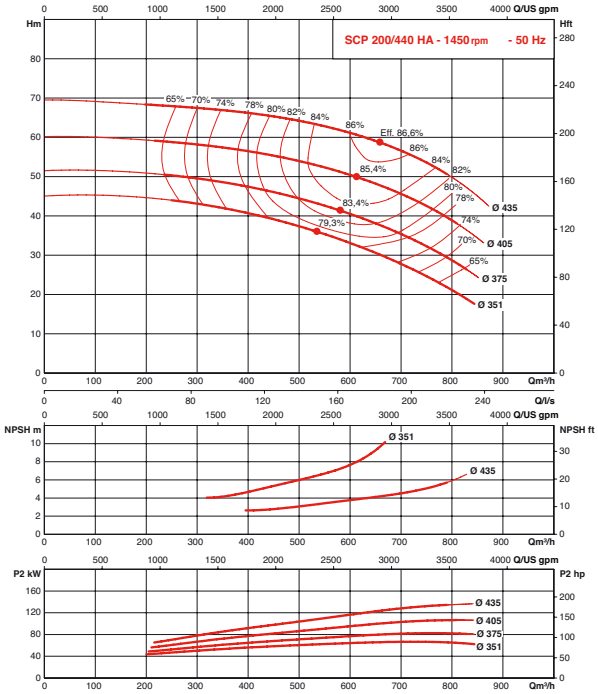

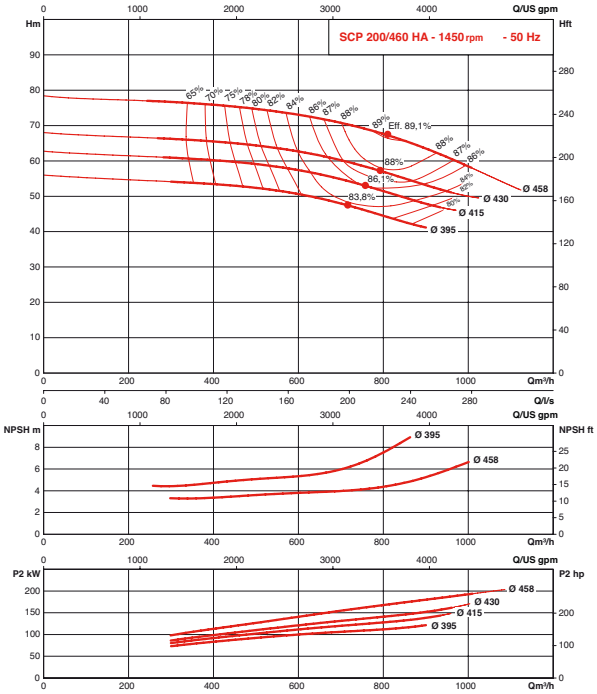

HYDRAULIC PERFORMANCES - 50HZ

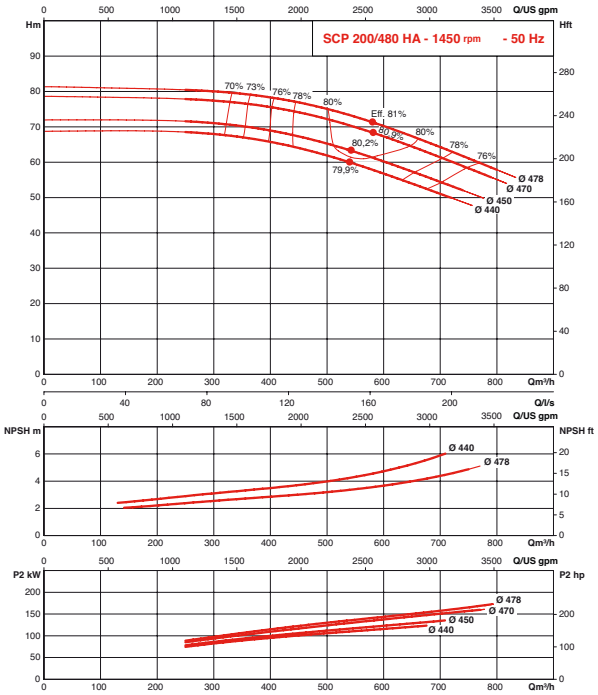

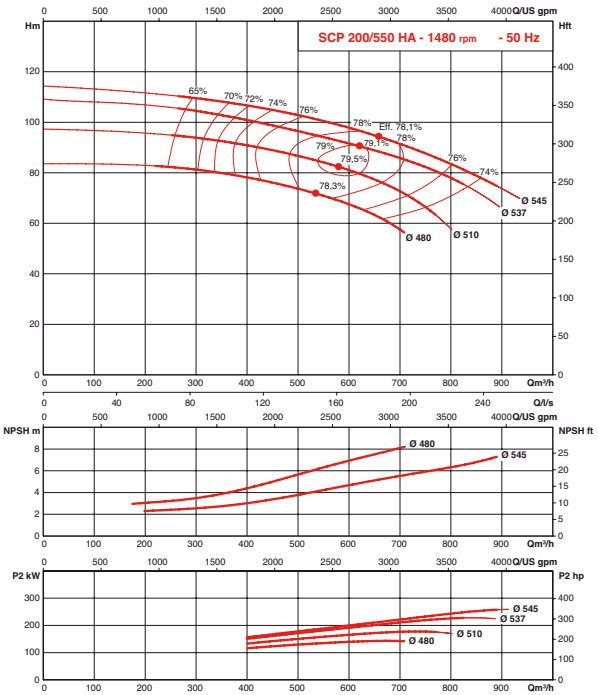

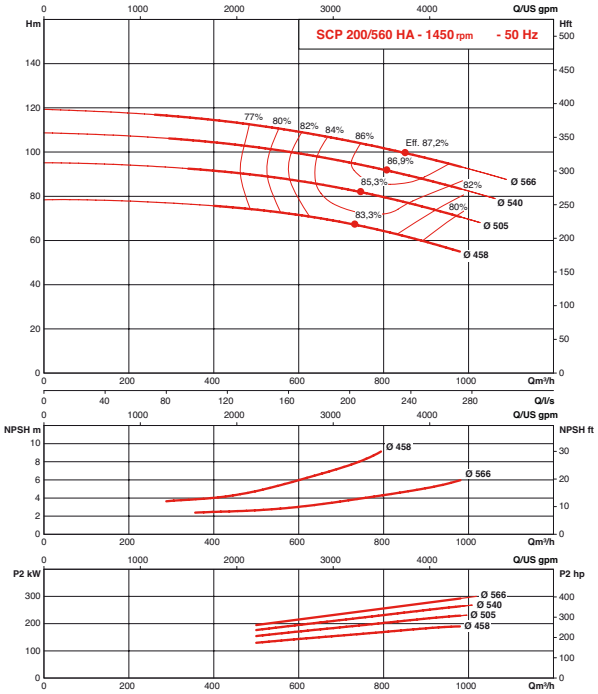

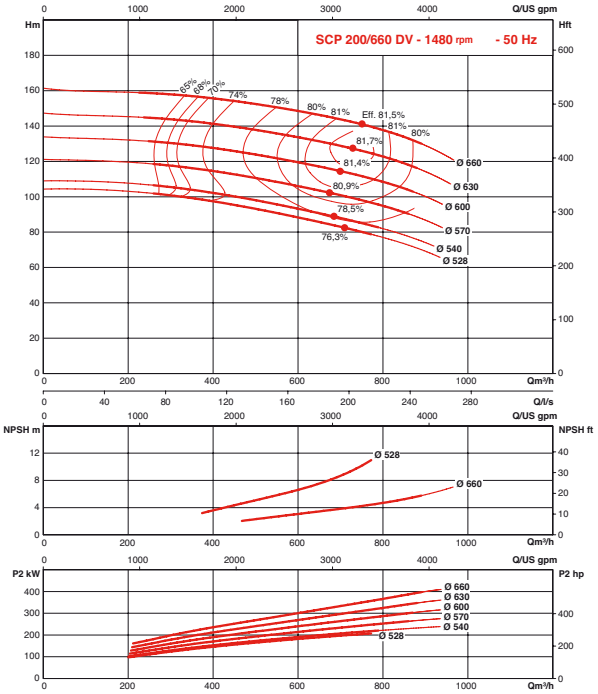

SCP

HYDRAULIC PERFORMANCES - 50HZ

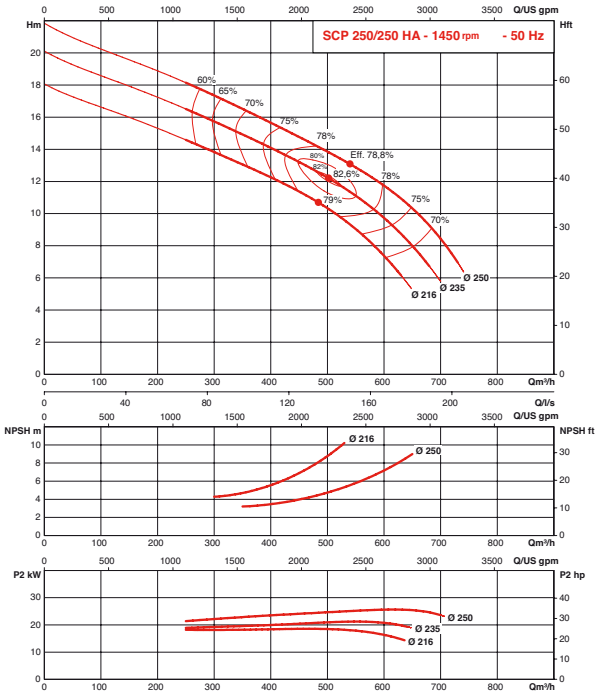

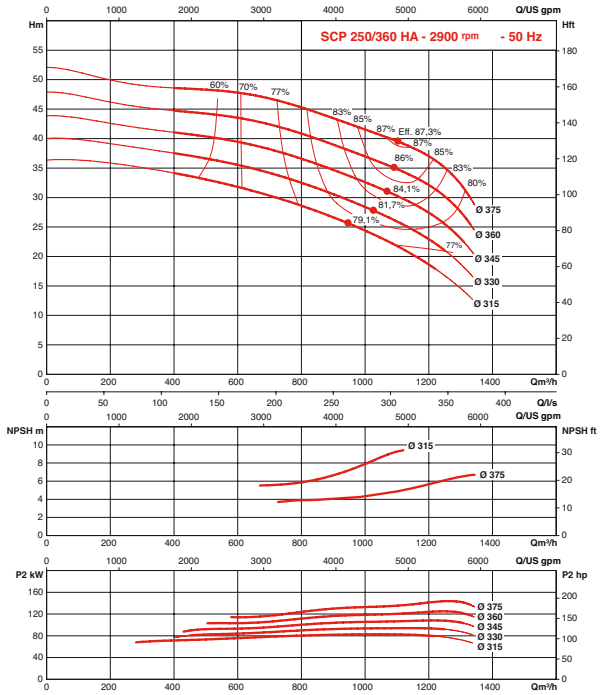

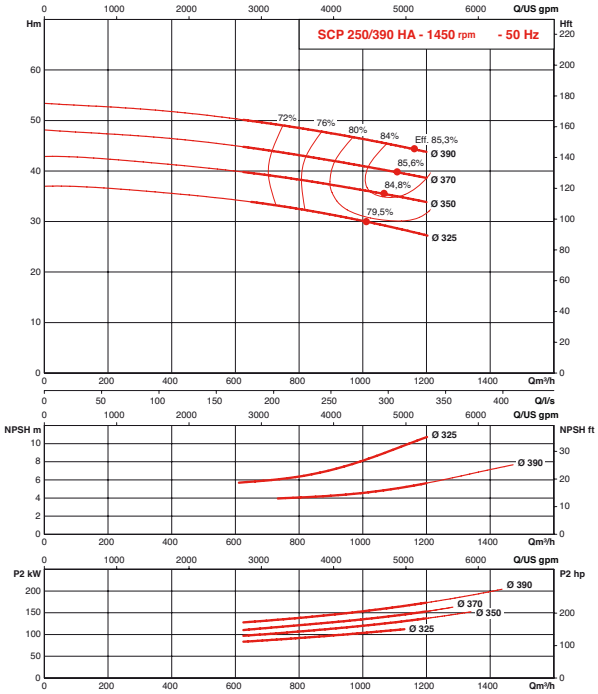

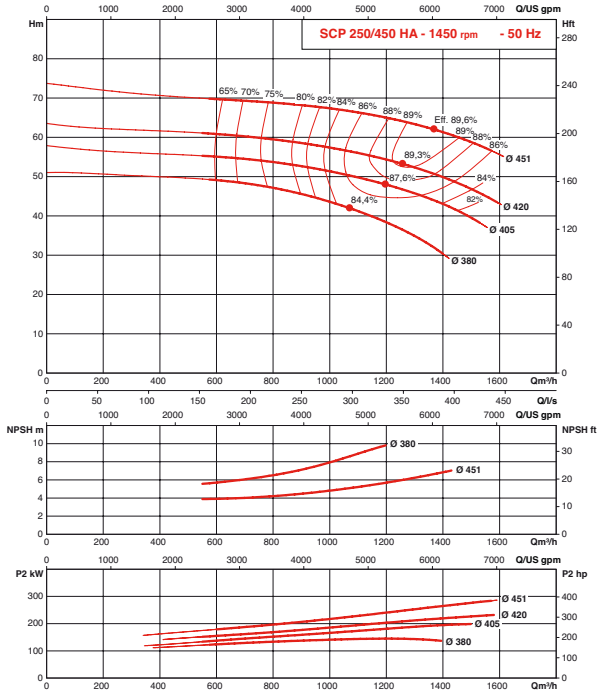

HYDRAULIC PERFORMANCES - 50HZ

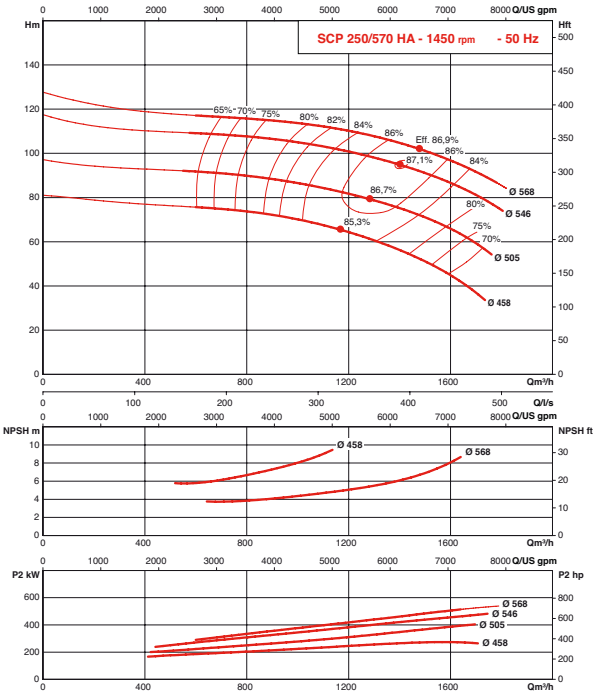

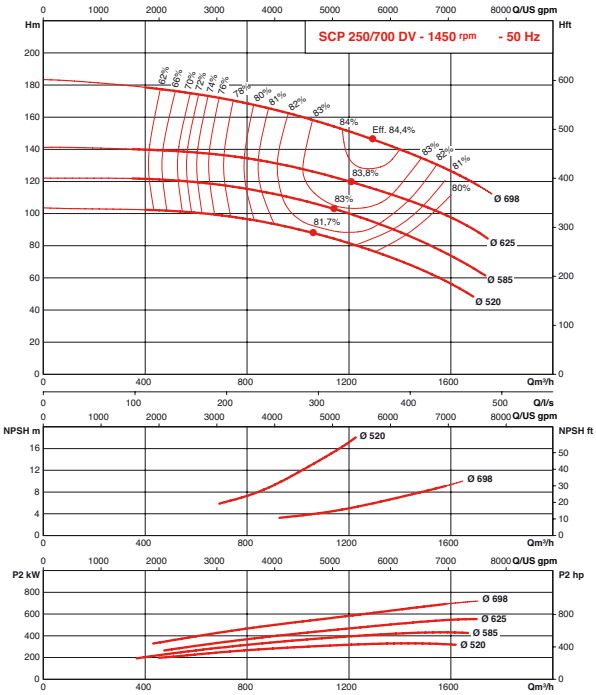

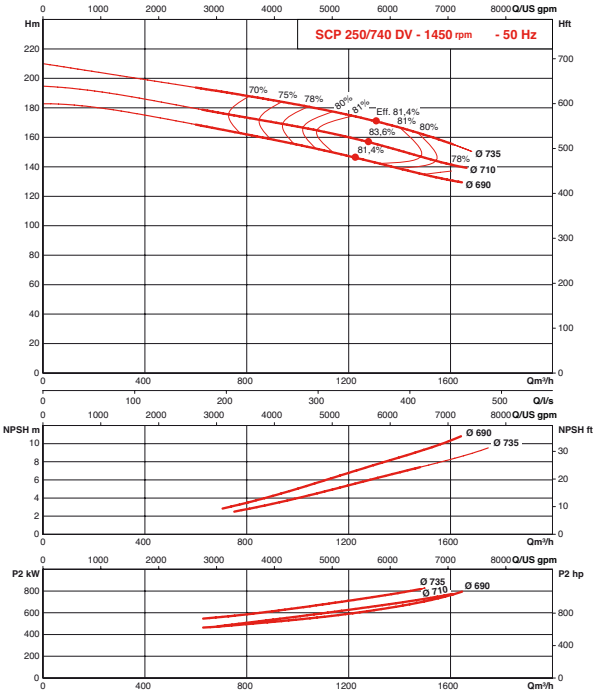

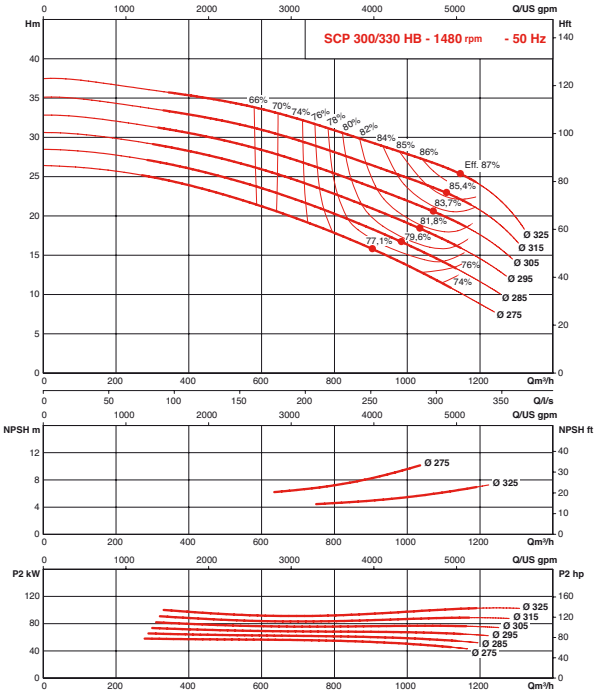

SCP

HYDRAULIC PERFORMANCES - 50HZ

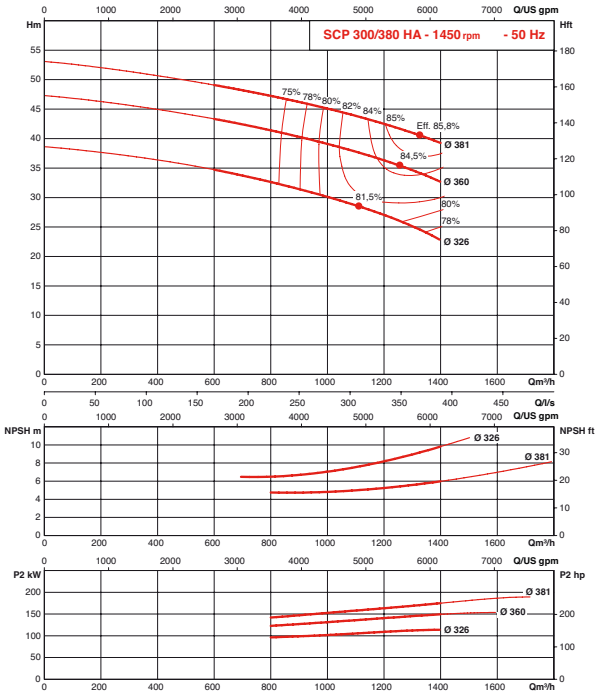

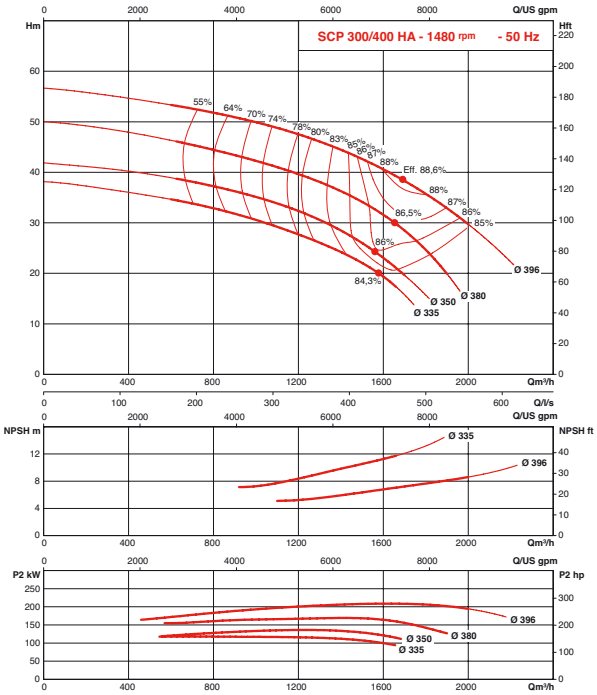

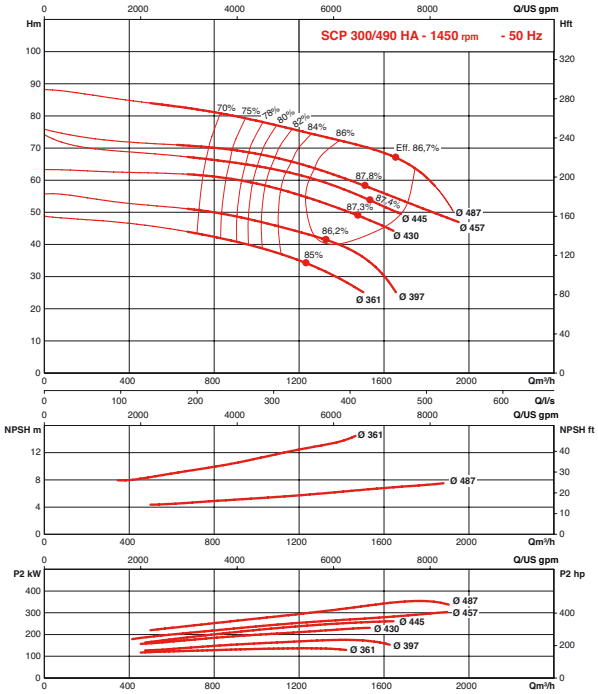

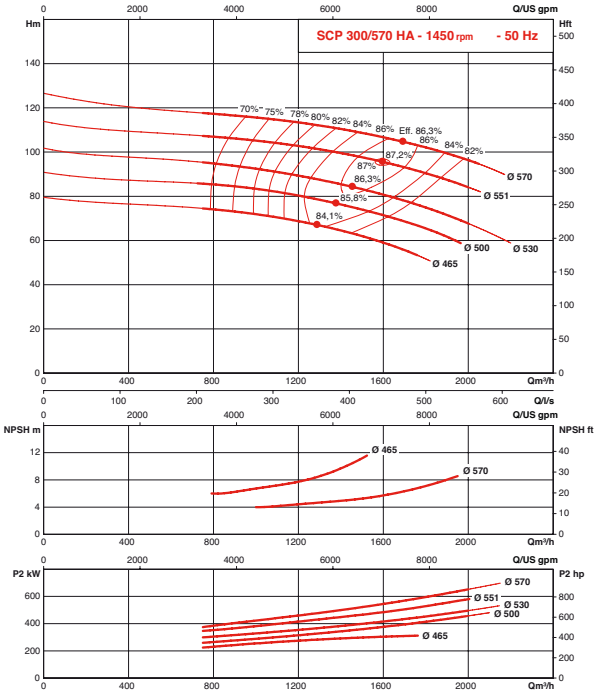

HYDRAULIC PERFORMANCES - 50HZ

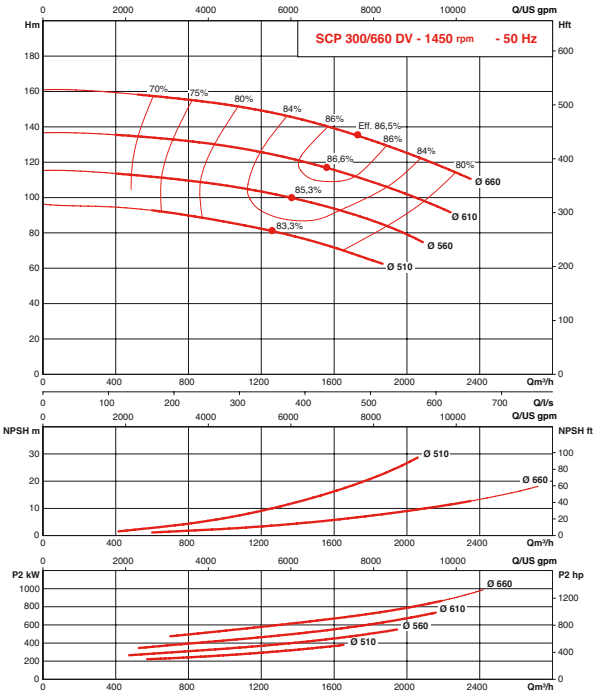

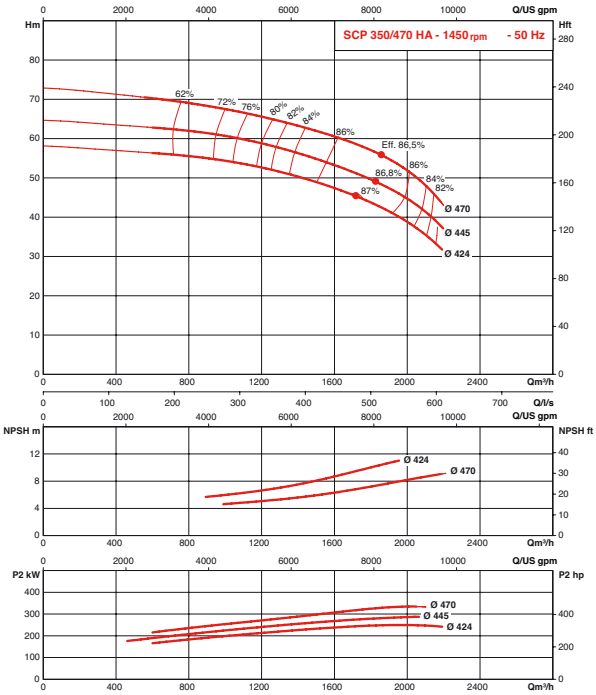

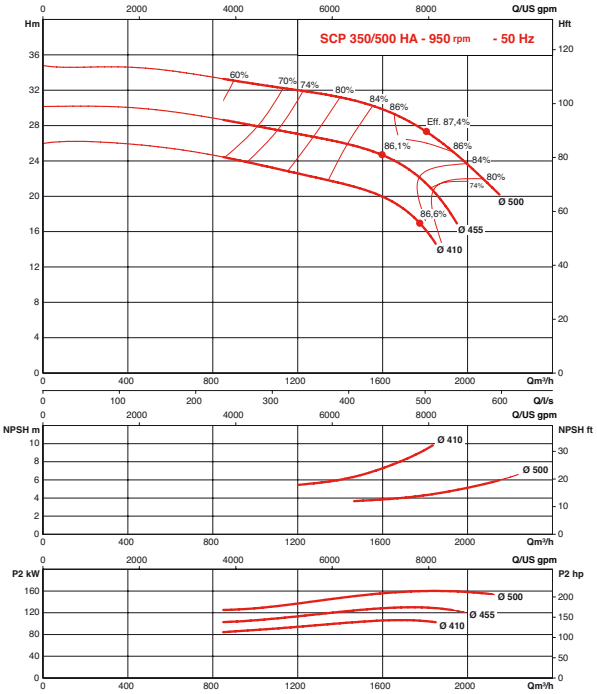

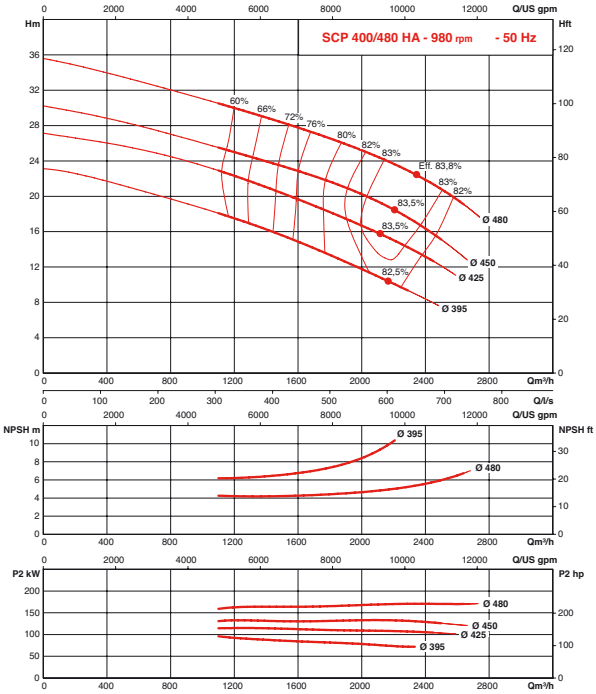

SCP

HYDRAULIC PERFORMANCES - 50HZ

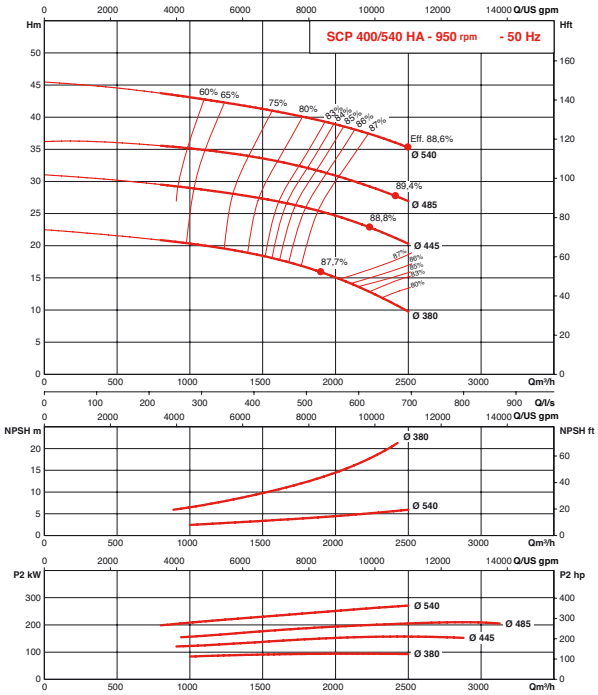

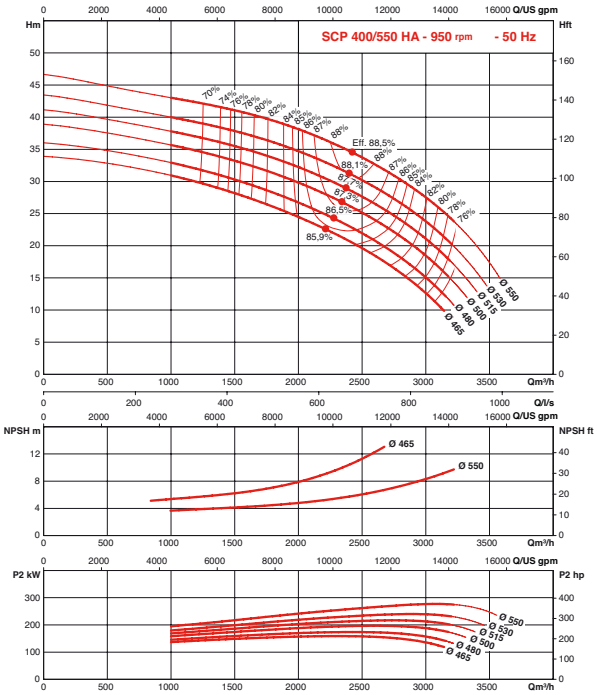

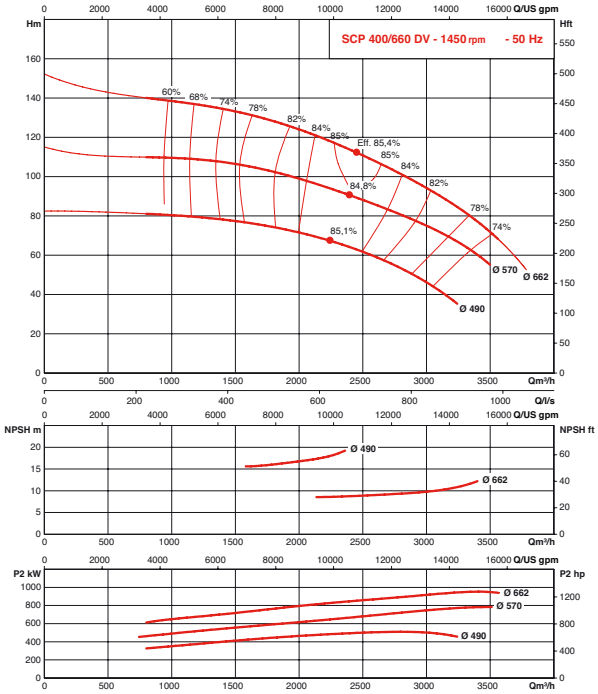

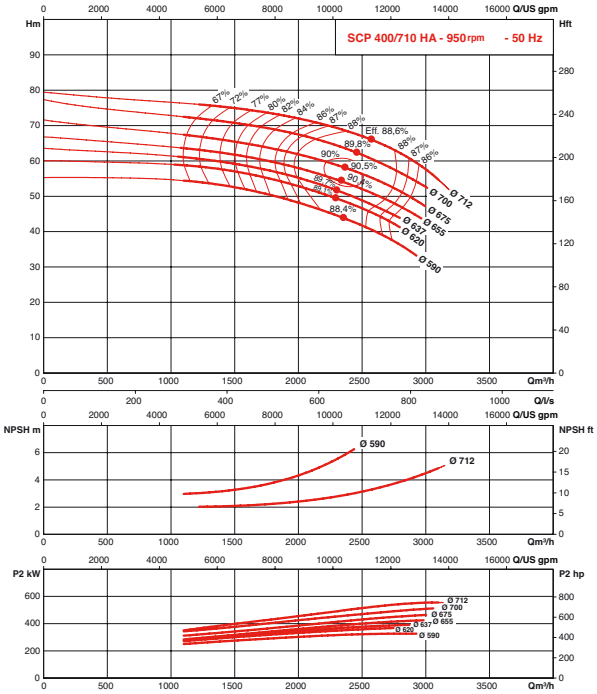

OUTLINE DRAWING (bare shaft - 1 speed)

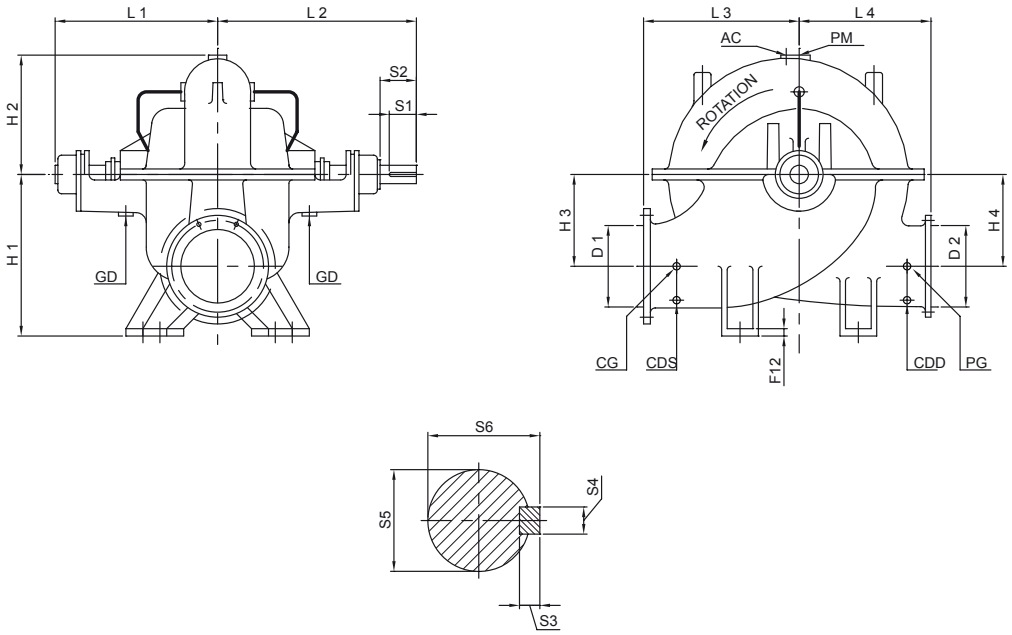

SHAFT DETAILS

OUTLINE DRAWING (bare shaft - 2 speeds)

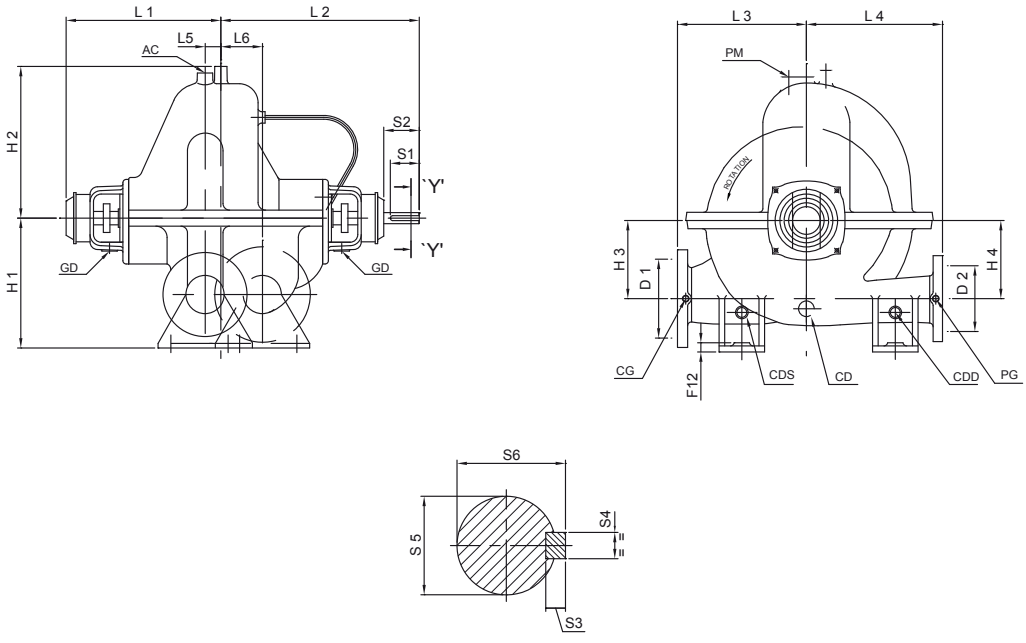

SHAFT DETAILS

SCP

BARE SHAFT PUMP FEET PLANS

PLAN -1

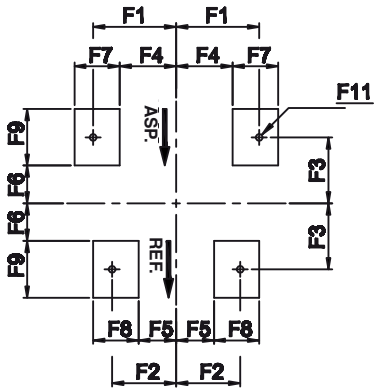

PLAN-2

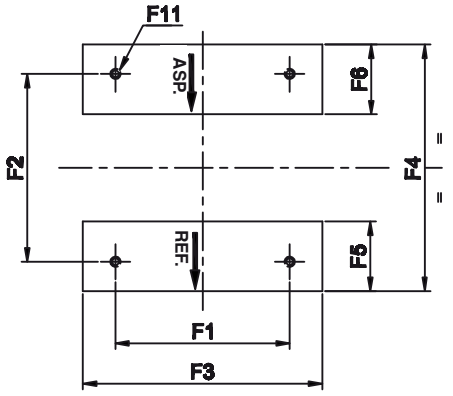

PLAN-3

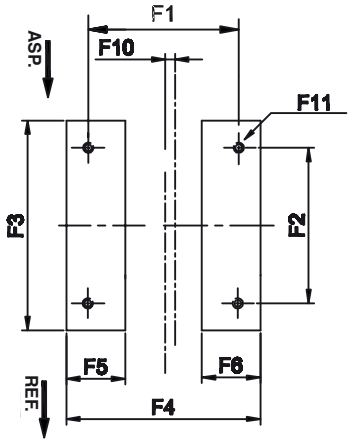

PLAN-4

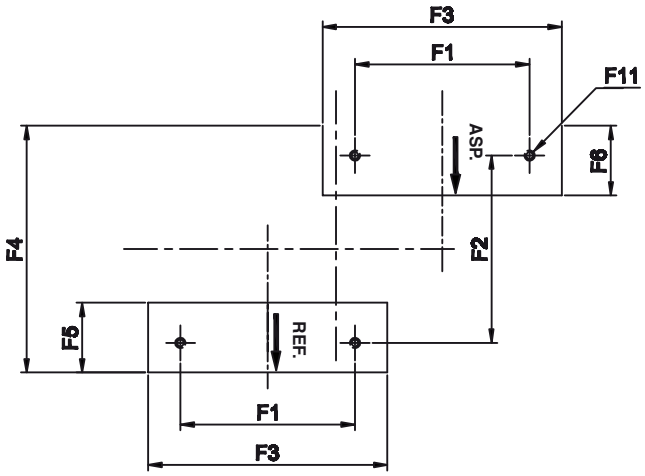

PLAN-5

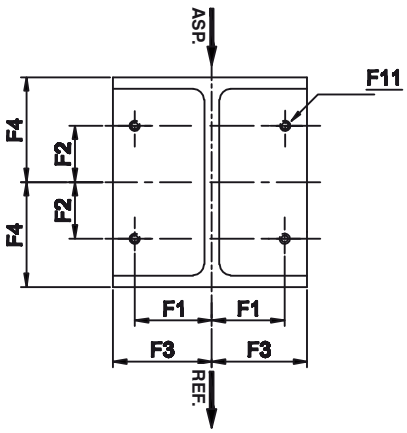

PLAN-6

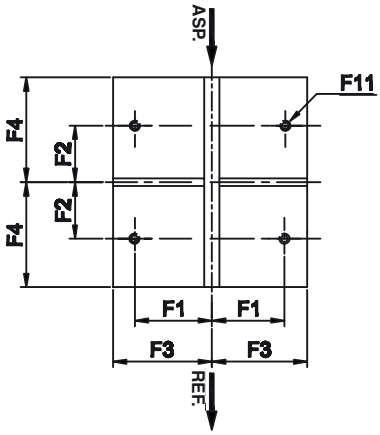

DIMENSIONAL TABLE (BARE SHAFT)

Pump model	DN		DN		Pump dimensions										Weight in Kg
	Ref.	Asp.	Ref.	Asp.											
	D2	D1	D2	D1	H1	H2	H3	H4	L1	L2	L3	L4	L5	L6	
SCP 50-180 HA	50	65	16	16	200	135	117	117	310	385	200	170	-	-	92
SCP 50-220 HA	50	65	16	16	200	143	124	124	250	300	190	150	-	-	65
SCP 50-340 DS	50	80	16	16	290	217	168	185	341	417	300	215	43	118	266
SCP 50-340 HA	50	80	16	16	250	205	178	191,5	310	385	261	218	-	-	130
SCP 65-390 HS	65	80	16	16	280	230	190	215	290	389	300	250	-	-	150
SCP 80-200 HA	80	100	16	16	250	155	135	135	323	399	225	190	-	-	149
SCP 80-230 HA	80	100	16	16	250	165	146	146	338	399	225	190	-	-	135
SCP 80-340 HA	80	100	16	16	300	220	200	200	338	399	275	230	-	-	135
SCP 80-360 DS	80	100	16	16	310	320	192	192	375	450	280	265	35	**85**	200
SCP 80-380 DS	80	100	16	16	340	250	192	208	386,5	458,5	335	242	52,5	138,5	272
SCP 100-270 HA	100	125	16	16	270	198	165	165	338	399	285	230	-	-	160
SCP 100-280 HA	100	125	16	16	270	190	175	175	338	399	300	250	-	-	130
SCP 100-360 HA	100	125	16	16	320	245	225	225	338	399	350	275	-	-	147
SCP 100-400 HA	100	125	16	16	320	245	225	225	338	399	350	275	-	-	147
SCP 100-410 DS	100	125	16	16	350	365	220	220	425	510	320	300	39,5	102	255
SCP 125-290 HA	125	150	16	16	320	240	213	213	385	458	350	275	-	-	160
SCP 125-330 HA	125	150	16	16	320	240	213	213	385	458	350	286	-	-	190
SCP 125-440 HA	125	150	16	16	400	284	274	274	385	458	400	350	-	-	220
SCP 125-460 DS	125	150	16	16	400	478	245	245	480	580	400	350	45	110	473
SCP 125-470 HA	125	150	16	16	414,5	325	295	295	471	560	420	400	-	-	500
SCP 150-290 HA	150	200	16	16	380	255	220	220	385	458	350	265	-	-	350
SCP 150-350 HA	150	200	16	16	425	275	252	252	471	560	400	350	-	-	360
SCP 150-390 HA	150	200	16	16	343	280	229	229	411	474	406	330	-	-	305
SCP 150-440 HA	150	200	16	16	425,5	305	274	274	411	474	432	381	-	-	360
SCP 150-460 DS	150	200	16	16	470	320	225	250	501	665	440	330	70	210	660
SCP 150-530 HA	150	200	16	16	465	370	320	320	485	612	450	440	-	-	567
SCP 150-580 HA	150	200	16	16	455	357	328	328	511	612	570	520	-	-	580
SCP 200-310 HA	200	200	16	16	343	270	227	227	411	474	406,5	317,5	-	-	343
SCP 200-320 HA	200	250	16	16	425	290	248	248	411	474	432	317,5	-	-	385
SCP 200-360 HB	200	300	16	16	450	310	276	276	471	560	470	350	-	-	460
SCP 200-370 HA	200	200	16	16	430	310	270	270	471	560	420	350	-	-	475
SCP 200-390 HA	200	250	16	16	464	315	292	292	525	612	483	381	-	-	579
SCP 200-440 HA	200	250	16	16	465	330	300	300	485	612	440	400	-	-	460
SCP 200-460 HA	200	250	16	16	463,5	344	298,5	298,5	525	612	482,5	458	-	-	750
SCP 200-480 HA	200	200	16	16	464	364	343	343	525	612	470	457	-	-	699
SCP 200-550 HA	200	200	16	16	464	364	343	343	525	612	470	457	-	-	699
SCP 200-560 HA	200	250	16	16	546	397	356	356	594	693	521	458	-	-	770
SCP 200-660 DV	200	250	16	16	640	460	440	440	565	693	600	500	-	-	1100
SCP 250-250 HA	250	250	16	16	410	265	222	222	367	458	370	260	-	-	270
SCP 250-360 HA	250	300	16	16	540	340	320	320	485	612	517	380	-	-	540
SCP 250-390 HA	250	300	16	16	540	340	320	320	485	612	517	380	-	-	540
SCP 250-450 HA	250	300	16	16	546	380	343	343	594	693	533,5	457	-	-	906
SCP 250-570 HA	250	300	16	16	546	415	356	356	594	693	584	492	-	-	975
SCP 250-700 DV	250	300	25	25	622	465	406,5	406,5	643	764,5	635	559	-	-	1480
SCP 250-740 DV	250	300	25	25	622	465	406,5	406,5	643	764,5	635	559	-	-	1480
SCP 300-330 HB	300	350	16	16	540	320	310	310	485	612	550	390	-	-	603
SCP 300-380 HA	300	350	16	16	546	370	317,5	317,5	525	612	559	390,5	-	-	1016
SCP 300-400 HA	300	400	16	16	610	393	350	350	536	667,5	550	350	-	-	880
SCP 300-490 HA	300	350	16	16	590,5	405	343	343	594	693	584	482	-	-	1110
SCP 300-570 HA	300	350	16	16	590,5	442	378	378	594	693	628,5	533	-	-	1255
SCP 300-660 DV	300	350	25	25	725	465	444,5	444,5	645,5	830	660,5	610	-	-	1540
SCP 350-470 HA	350	450	16	16	660	430	360	360	565	693	625	530	-	-	1150
SCP 350-500 HA	350	450	16	16	730	480	450	450	597	743	768	550	-	-	1125
SCP 400-480 HA	400	500	16	16	780	520	445	445	597	743	790	545	-	-	1134
SCP 400-540 HA	400	500	16	16	440	495	465	465	619	785	680	450	-	-	1400
SCP 400-550 HA	400	500	16	16	780	495	470	470	697	825	760	560	-	-	1453
SCP 400-660 DV	400	500	16	16	800	515	483	483	815	959	762	660	-	-	2700
SCP 400-710 HA	400	450	16	16	800	574	521	521	703,5	824,5	864	762	-	-	2515

SCP

DIMENSIONAL TABLE (BARE SHAFT)

Pump model	Tab dimensions										Shaft end								Pump feet plan No
	F1	F2	F3	F4	F5	F6	F7	F8	F9	F10	F11	F12	S1	S2	S3	S4	S5	S6	
SCP 50-180 HA	70	60	100	100	-	-	-	-	-	-	18	10	45	70	6	6	19,5	22	A3
SCP 50-220 HA	70	50	100	100	-	-	-	-	-	-	14	12	45	47	6	6	19,5	22	A4
SCP 50-340 DS	254	130	300	200	80	80	-	-	-	20	18	15	45	72	7	8	24	27	A5
SCP 50-340 HA	75	85	110	120	82	82	-	-	-	-	18	15	45	70	6	6	19,5	22	A2
SCP 65-390 HS	90	80	120	120	90	90	-	-	-	-	18	15	45	84	7	8	24	27	A2
SCP 80-200 HA	75	85	110	120	82	82	-	-	-	-	18	15	45	73	7	8	24	27	A2
SCP 80-230 HA	75	85	110	120	82	82	-	-	-	-	18	15	45	73	7	8	24	27	A2
SCP 80-340 HA	75	85	110	120	82	82	-	-	-	-	18	15	45	73	7	8	24	27	A2
SCP 80-360 DS	150	300	200	400	100	100	-	-	-	-	18	16	70	96	7	8	29	32	A6
SCP 80-380 DS	290	170	240	240	100	100	-	-	-	30	19	15	50	72	7	8	28	31	A5
SCP 100-270 HA	150	95	100	85	30	50	100	100	100	-	18	18	45	73	7	8	24	27	A1
SCP 100-280 HA	150	95	100	85	30	50	100	100	100	-	18	14	45	73	7	8	24	27	A1
SCP 100-360 HA	150	95	110	85	30	60	100	100	100	-	18	18	45	73	7	8	24	27	A1
SCP 100-400 HA	150	95	110	85	30	60	100	100	100	-	18	14	45	73	7	8	24	27	A1
SCP 100-410 DS	170	300	225	400	100	100	-	-	-	-	18	18	80	101	8	10	34	37	A6
SCP 125-290 HA	150	95	110	85	30	60	100	100	100	-	18	16	82	88	7	8	29	32	A1
SCP 125-330 HA	150	95	110	85	30	60	100	100	100	-	18	14	82	88	7	8	29	32	A1
SCP 125-440 HA	145	115	160	80	50	100	100	100	120	-	22	20	82	88	7	8	29	32	A1
SCP 125-460 DS	190	410	260	535	125	125	-	-	-	-	22	20,5	95	120	8	12	44	47	A6
SCP 125-470 HA	180	180	180	115	115	120	100	100	120	-	22	25	88	119	8	12	39	42	A1
SCP 150-290 HA	140	140	142,5	75	75	92,5	100	100	100	-	18	20	82	88	7	8	29	32	A1
SCP 150-350 HA	200	152	180	135	87	120	100	100	120	-	24	20	88	119	8	12	39	42	A1
SCP 150-390 HA	200	130	160	135	65	100	100	100	120	-	22	20	88	98	8	12	39	42	A1
SCP 150-440 HA	200	130	160	135	65	100	100	100	120	-	22	20	88	98	8	12	39	42	A1
SCP 150-460 DS	420	280	385	500	125	125	-	-	-	40	22	25	95	185	8	12	44	47	A5
SCP 150-530 HA	250	150	208	165	75	140	120	115	135	-	28	25	110	138	10	16	54	58	A1
SCP 150-580 HA	200	152	260	115	73	192,5	120	114	135	-	25	25	110	137	10	16	54	58	A1
SCP 200-310 HA	200	152	160	135	87	100	100	100	120	-	22	20	88	98	8	12	39	42	A1
SCP 200-320 HA	200	152	160	135	87	100	100	100	120	-	24	20	88	98	8	12	39	42	A1
SCP 200-360 HB	200	152	170	135	87	120	100	100	120	-	24	20	88	119	8	12	39	42	A1
SCP 200-370 HA	180	180	180	115	115	120	100	100	120	-	22	20	88	119	8	12	39	42	A1
SCP 200-390 HA	200	152	160	115	73	92,5	120	114	135	-	25	22	110	134	10	16	54	58	A1
SCP 200-440 HA	200	150	208	120	75	140	120	115	135	-	28	25	110	138	10	16	54	58	A1
SCP 200-460 HA	200	152	160	115	73	92,5	120	114	135	-	25	25	110	134	10	16	54	58	A1
SCP 200-480 HA	200	152	160	115	73	92,5	120	114	135	-	25	25	110	134	10	16	54	58	A1
SCP 200-550 HA	200	152	160	115	73	92,5	120	114	135	-	25	22	110	134	10	16	54	58	A1
SCP 200-560 HA	275	200	230	175	100	155	150	150	150	-	28	28	130	156	12	20	69	73,5	A1
SCP 200-660 DV	260	170	277,5	160	100	190	150	120	175	-	28	30	130	156	12	20	69	73,5	A1
SCP 250-250 HA	200	152	120	135	87	70	100	100	100	-	18	20	82	88	7	8	29	32	A1
SCP 250-360 HA	250	175	160	165	90	92,5	120	120	135	-	24	20	110	138	10	16	54	58	A1
SCP 250-390 HA	250	175	160	165	90	92,5	120	120	135	-	24	20	110	138	10	16	54	58	A1
SCP 250-450 HA	275	200	230	175	100	155	150	150	150	-	28,5	28	130	156	12	20	69	73,5	A1
SCP 250-570 HA	275	200	230	175	100	155	150	150	150	-	28	28	130	156	12	20	69	73,5	A1
SCP 250-700 DV	270	170	270	200	100	180	120	120	180	-	28	30	146	178	14	22	79	84	A1
SCP 250-740 DV	270	170	270	200	100	180	120	120	180	-	28	30	146	178	14	22	79	84	A1
SCP 300-330 HB	250	175	160	165	90	92,5	120	120	135	-	28	20	110	138	10	16	54	58	A1
SCP 300-380 HA	260	152	160	165	73	92,5	120	114	135	-	25	25	110	134	10	16	54	58	A1
SCP 300-400 HA	260	200	175	160	100	100	150	150	150	-	28	25	110	147	10	16	54	58	A1
SCP 300-490 HA	300	250	230	200	150	155	150	150	150	-	28	28	130	156	12	20	69	73,5	A1
SCP 300-570 HA	300	250	230	200	150	155	150	150	150	-	28	28	130	156	12	20	69	73,5	A1
SCP 300-660 DV	200	200	310	100	100	210	150	150	200	-	28	30	146	182	14	25	89	94	A1
SCP 350-470 HA	340	220	277,5	240	120	190	150	150	175	-	28	30	130	156	12	20	69	73,5	A1
SCP 350-500 HA	340	250	302,5	240	150	215	150	150	175	-	28	30	130	156	12	20	69	73,5	A1
SCP 400-480 HA	450	220	300	350	120	200	150	150	200	-	28	28	130	156	12	20	69	73,5	A1
SCP 400-540 HA	930	380	540	1040	125	125	-	-	-	-	32	30	130	175	12	20	69	73,5	A1
SCP 400-550 HA	450	220	300	350	120	200	150	150	200	-	32	32	146	178	14	22	79	84	A1
SCP 400-660 DV	420	260	300	320	160	200	150	150	200	-	28	40	197	215	14	25	94	99	A1
SCP 400-710 HA	380	220	400	280	120	300	150	150	200	-	30	30	146	178	14	22	79	85,5	A1

CONNECTIONS

Pump model	CG	PG	PM	AC	CDS	CDD	CD	GD	VG	TG
SCP 50-180 HA	1/4"	1/4"	3/8"	3/8"	1/4"	1/4"	-	3/4"	M8	-
SCP 50-220 HA	1/4"	1/4"	1/4"	1/4"	1/4"	1/4"	-	1/4"	M8	-
SCP 50-340 DS	3/8"	3/8"	1/2"	3/8"	3/8"	3/8"	3/8"	3/4"	M8	-
SCP 50-340 HA	3/8"	3/8"	1/2"	3/8"	1/2"	1/2"	-	3/4"	M8	-
SCP 65-390 HS	3/8"	3/8"	1/2"	3/8"	1/2"	1/2"	-	3/4"	M8	-
SCP 80-200 HA	3/8"	3/8"	1/2"	3/8"	1/2"	1/2"	-	3/4"	M8	-
SCP 80-230 HA	3/8"	3/8"	1/2"	3/8"	1/2"	1/2"	-	3/4"	M8	-
SCP 80-340 HA	3/8"	3/8"	1/2"	3/8"	1/2"	1/2"	-	3/4"	M8	-
SCP 80-360 DS	3/8"	3/8"	3/4"	3/8"	1/2"	1/2"	1/2"	1/2"	M8	-
SCP 80-380 DS	3/8"	3/8"	1/2"	3/8"	3/8"	3/8"	1/2"	3/4"	M8	-
SCP 100-270 HA	3/8"	3/8"	1/2"	3/8"	1/2"	1/2"	-	3/4"	M8	M8
SCP 100-280 HA	3/8"	3/8"	1/2"	3/8"	1/2"	1/2"	-	3/4"	M8	M8
SCP 100-360 HA	3/8"	3/8"	1/2"	3/8"	1/2"	1/2"	-	3/4"	M8	M8
SCP 100-400 HA	3/8"	3/8"	1/2"	3/8"	1/2"	1/2"	-	3/4"	M8	M8
SCP 100-410 DS	3/8"	3/8"	3/4"	3/8"	1/2"	1/2"	1/2"	3/4"	M8	M8
SCP 125-290 HA	3/8"	3/8"	1/2"	3/8"	1/2"	1/2"	-	3/4"	M8	M8
SCP 125-330 HA	3/8"	3/8"	1/2"	3/8"	1/2"	1/2"	-	3/4"	M8	M8
SCP 125-440 HA	3/8"	3/8"	1/2"	3/8"	1/2"	1/2"	-	3/4"	M8	M8
SCP 125-460 DS	3/8"	3/8"	3/4"	3/8"	1/2"	1/2"	1/2"	3/4"	M8	M8
SCP 125-470 HA	3/8"	3/8"	3/4"	3/8"	3/4"	3/4"	-	3/4"	M8	M8
SCP 150-290 HA	3/8"	3/8"	1"	3/8"	1/2"	1/2"	-	3/4"	M8	M8
SCP 150-350 HA	3/8"	3/8"	3/4"	3/8"	3/4"	3/4"	-	3/4"	M8	M8
SCP 150-390 HA	3/8"	3/8"	1/2"	3/8"	3/4"	3/4"	-	3/4"	M8	M8
SCP 150-440 HA	3/8"	3/8"	1/2"	3/8"	3/4"	3/4"	-	3/4"	M8	M8
SCP 150-460 DS	1/2"	1/2"	3/4"	3/8"	1/2"	1/2"	1/2"	1/2"	M8	M8
SCP 150-530 HA	3/8"	3/8"	1"	3/8"	3/4"	3/4"	-	3/4"	M8	M8
SCP 150-580 HA	3/8"	3/8"	1"	3/8"	1/2"	1/2"	-	3/4"	M8	M8
SCP 200-310 HA	3/8"	3/8"	1/2"	3/8"	3/4"	3/4"	-	3/4"	M8	M8
SCP 200-320 HA	3/8"	3/8"	3/4"	3/8"	3/4"	3/4"	-	3/4"	M8	M8
SCP 200-360 HB	3/8"	3/8"	3/4"	3/8"	3/4"	3/4"	-	3/4"	M8	M8
SCP 200-370 HA	3/8"	3/8"	3/4"	3/8"	3/4"	3/4"	-	3/4"	M8	M8
SCP 200-390 HA	3/8"	3/8"	1"	3/8"	3/4"	3/4"	-	3/4"	M8	M8
SCP 200-440 HA	3/8"	3/8"	1"	3/8"	3/4"	3/4"	-	3/4"	M8	M8
SCP 200-460 HA	3/8"	3/8"	1"	3/8"	3/4"	3/4"	-	3/4"	M8	M8
SCP 200-480 HA	3/8"	3/8"	1"	3/8"	1/2"	1/2"	-	3/4"	M8	M8
SCP 200-550 HA	3/8"	3/8"	1"	3/8"	1/2"	1/2"	-	3/4"	M8	M8
SCP 200-560 HA	3/8"	3/8"	1"	3/8"	1/2"	1/2"	-	3/4"	M8	M8
SCP 200-660 DV	3/8"	3/8"	1"	3/8"	1"	1"	-	1"	M8	M8
SCP 250-250 HA	3/8"	3/8"	1/2"	3/8"	1/2"	1/2"	-	3/4"	M8	M8
SCP 250-360 HA	3/8"	3/8"	1"	3/8"	3/4"	3/4"	-	3/4"	M8	M8
SCP 250-390 HA	3/8"	3/8"	1"	3/8"	3/4"	3/4"	-	3/4"	M8	M8
SCP 250-450 HA	3/8"	3/8"	1"	3/8"	1/2"	1/2"	-	1"	M8	M8
SCP 250-570 HA	3/8"	3/8"	1"	3/8"	1/2"	1/2"	-	1"	M8	M8
SCP 250-700 DV	3/8"	3/8"	1"	3/8"	1"	1"	-	1.1/4"	M8	M8
SCP 250-740 DV	3/8"	3/8"	1"	3/8"	1"	1"	-	1.1/4"	M8	M8
SCP 300-330 HB	3/8"	3/8"	1"	3/8"	3/4"	3/4"	-	3/4"	M8	M8
SCP 300-380 HA	3/8"	3/8"	1"	3/8"	1"	1"	-	3/4"	M8	M8
SCP 300-400 HA	3/8"	3/8"	1"	3/8"	3/4"	3/4"	-	3/4"	M8	M8
SCP 300-490 HA	3/8"	3/8"	1"	3/8"	1"	1"	-	1"	M8	M8
SCP 300-570 HA	3/8"	3/8"	1"	3/8"	1"	1"	-	1"	M8	M8
SCP 300-660 DV	3/8"	3/8"	1-1/2"	3/8"	1"	1"	-	1"	M8	M8
SCP 350-470 HA	3/8"	3/8"	1"	3/8"	1"	1"	-	1"	M8	M8
SCP 350-500 HA	3/8"	3/8"	1"	3/8"	1"	1"	-	1"	M8	M8
SCP 400-480 HA	3/8"	3/8"	1"	3/8"	1"	1"	-	1"	M8	M8
SCP 400-540 HA	3/8"	3/8"	1"	3/8"	1"	1"	-	1"	M8	M8
SCP 400-550 HA	3/8"	3/8"	1"	3/8"	1"	1"	-	1"	M8	M8
SCP 400-660 DV	1/2"	1/2"	1"	3/8"	1"	1"	-	1"	M8	M8
SCP 400-710 HA	3/8"	3/8"	1"	3/8"	1"	1"	-	1.1/4"	M8	M8

All the connection dimensions are given in inches with the exception of the temperature probe which is in mm

GD = gland drain

CG = compound gauge

PG = pressure gauge

AC = air cock

PM = priming

CDS = casing drain (suction)

CDD = casing drain (delivery)

TG = temperature gauge

SCP

DIMENSIONS – FLANGES

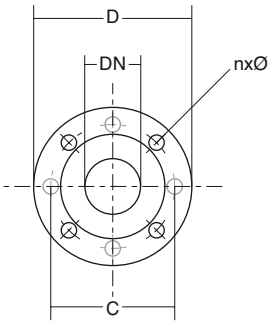

Flange connections DIN 2501 PN 16

DN	50	65	80	100	125	150	200	250	300	350	400	450	500
D	165	185	200	220	250	285	340	405	460	520	580	640	715
C	125	145	160	180	210	240	295	355	410	470	525	585	650
Flange thickness	19	19	19	19	19	19	20	22	24,5	26,5	28	30	31,5
nxØ	4x18	4x18	8x18	8x18	8x18	12x23	12x23	12x28	16x28	16x28	16x31	20x31	20x34

Flange connections DIN 2501 PN 25

DN	50	65	80	100	125	150	200	250	300	350	400	450	500
D	165	185	200	220	270	300	360	425	485	555	620	670	730
C	125	145	160	180	220	250	310	370	430	490	550	600	770
Flange thickness	19	19	19	19	19	20	22	24,5	27,5	30	32	34,5	36,5
nxØ	4x18	4x18	8x18	8x18	8x28	8x28	12x28	12x31	16x31	16x34	16x37	20x37	20x41

OUTLINE DRAWING (complete unit - 1 speed)

- 1 speed pump

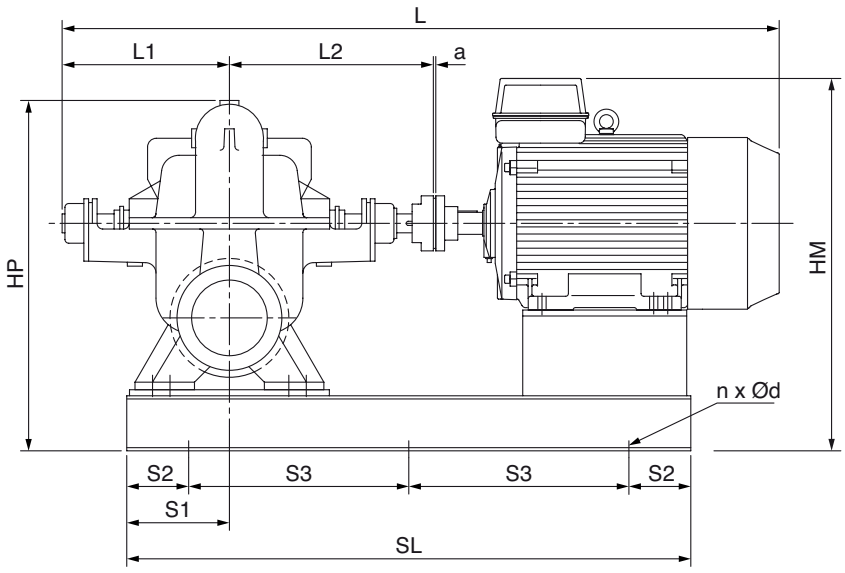

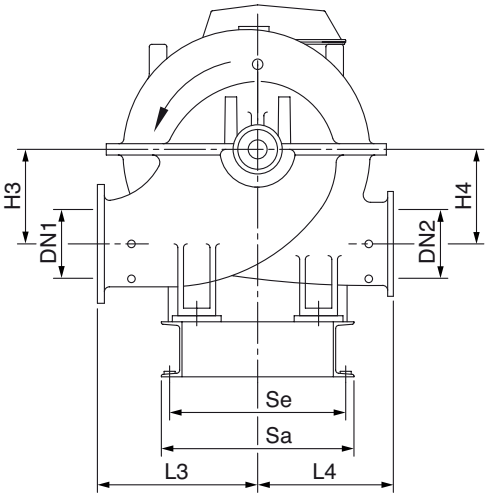

Non-contractual visual

OUTLINE DRAWING (complete unit)

- 2 speed pump

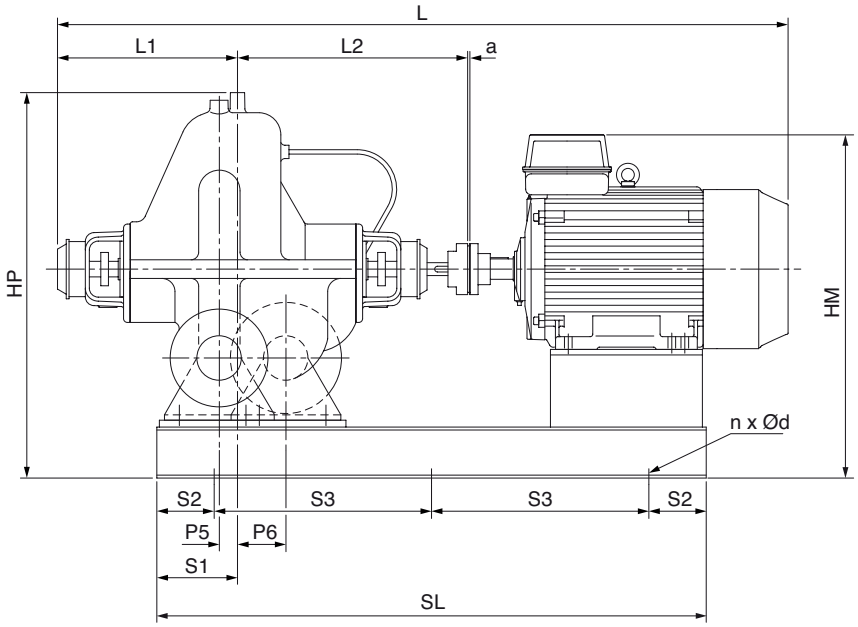

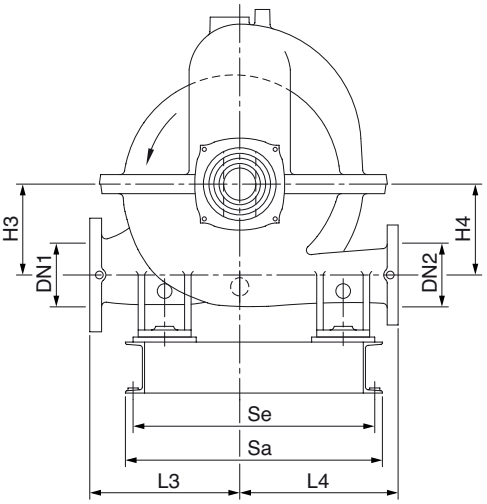

Non-contractual visual

SCP

DIMENSIONAL TABLE (complete unit)

Unit name	Pump size	Flange dimensions		Nominal motor power	Motor casing	H1	H2	H3	H4	L	L0	L1	L2	L3	L4
		DN1	DN2	P2											
SCP50/180HA-1,1/4	SCP50/180HA	65	50	1,1	90S	200	135	117	117	1049	350	310	385	200	170
SCP50/180HA-1,5/4	SCP50/180HA	65	50	1,5	90L	200	135	117	117	1074	375	310	385	200	170
SCP50/220HA-1,1/4	SCP50/220HA	65	50	1,1	90S	200	143	124	124	904	350	250	300	190	150
SCP50/220HA-1,5/4	SCP50/220HA	65	50	1,5	90L	200	143	124	124	929	375	250	300	190	150
SCP50/220HA-2,2/4	SCP50/220HA	65	50	2,2	100L	200	143	124	124	985	431	250	300	190	150
SCP50/340DS-5,5/4	SCP50/340DS	80	50	5,5	132S	290	217	168	185	1281	519	341	417	300	215
SCP50/340DS-7,5/4	SCP50/340DS	80	50	7,5	132M	290	217	168	185	1319	557	341	417	300	215
SCP50/340DS-11/4	SCP50/340DS	80	50	11	160M	290	217	168	185	1474	712	341	417	300	215
SCP50/340DS-15/4	SCP50/340DS	80	50	15	160L	290	217	168	185	1518	756	341	417	300	215
SCP50/340DS-18,5/4	SCP50/340DS	80	50	18,5	180M	290	217	168	185	1544	782	341	417	300	215
SCP50/340DS-22/4	SCP50/340DS	80	50	22	180L	290	217	168	185	1582	820	341	417	300	215
SCP50/340DS-30/4	SCP50/340DS	80	50	30	200L	290	217	168	185	1642	880	341	417	300	215
SCP50/340HA-3/4	SCP50/340HA	80	50	3	100L	250	205	178	191.5	1130	431	310	385	261	218
SCP50/340HA-4/4	SCP50/340HA	80	50	4	112M	250	205	178	191.5	1147	448	310	385	261	218
SCP50/340HA-5,5/4	SCP50/340HA	80	50	5,5	132S	250	205	178	191.5	1218	519	310	385	261	218
SCP50/340HA-7,5/4	SCP50/340HA	80	50	7,5	132M	250	205	178	191.5	1256	557	310	385	261	218
SCP50/340HA-11/4	SCP50/340HA	80	50	11	160M	250	205	178	191.5	1411	712	310	385	261	218
SCP65/390HS-5,5/4	SCP65/390HS	80	65	5,5	132S	280	230	190	215	1202	519	290	389	300	250
SCP65/390HS-7,5/4	SCP65/390HS	80	65	7,5	132M	280	230	190	215	1240	557	290	389	300	250
SCP65/390HS-11/4	SCP65/390HS	80	65	11	160M	280	230	190	215	1395	712	290	389	300	250
SCP65/390HS-15/4	SCP65/390HS	80	65	15	160L	280	230	190	215	1439	756	290	389	300	250
SCP65/390HS-18,5/4	SCP65/390HS	80	65	18,5	180M	280	230	190	215	1465	782	290	389	300	250
SCP65/390HS-22/4	SCP65/390HS	80	65	22	180L	280	230	190	215	1503	820	290	389	300	250
SCP80/200HA-11/2	SCP80/200HA	100	80	11	160M	250	155	135	135	1438	712	323	399	225	190
SCP80/200HA-15/2	SCP80/200HA	100	80	15	160M	250	155	135	135	1438	712	323	399	225	190
SCP80/200HA-18,5/2	SCP80/200HA	100	80	18,5	160L	250	155	135	135	1482	756	323	399	225	190
SCP80/200HA-22/2	SCP80/200HA	100	80	22	180M	250	155	135	135	1508	782	323	399	225	190
SCP80/230HA-1,5/4	SCP80/230HA	100	80	1,5	90L	250	165	146	146	1116	375	338	399	225	190
SCP80/230HA-2,2/4	SCP80/230HA	100	80	2,2	100L	250	165	146	146	1172	431	338	399	225	190
SCP80/230HA-3/4	SCP80/230HA	100	80	3	100L	250	165	146	146	1172	431	338	399	225	190
SCP80/230HA-4/4	SCP80/230HA	100	80	4	112M	250	165	146	146	1189	448	338	399	225	190
SCP80/230HA-5,5/4	SCP80/230HA	100	80	5,5	132S	250	165	146	146	1260	519	338	399	225	190
SCP80/340HA-4/4	SCP80/340HA	100	80	4	112M	300	220	200	200	1189	448	338	399	275	230
SCP80/340HA-5,5/4	SCP80/340HA	100	80	5,5	132S	300	220	200	200	1260	519	338	399	275	230
SCP80/340HA-7,5/4	SCP80/340HA	100	80	7,5	132M	300	220	200	200	1298	557	338	399	275	230
SCP80/340HA-11/4	SCP80/340HA	100	80	11	160M	300	220	200	200	1453	712	338	399	275	230
SCP80/340HA-15/4	SCP80/340HA	100	80	15	160L	300	220	200	200	1497	756	338	399	275	230
SCP80/340HA-18,5/4	SCP80/340HA	100	80	18,5	180M	300	220	200	200	1523	782	338	399	275	230
SCP80/360DS-15/4	SCP80/360DS	100	80	15	160L	310	320	192	192	1585	756	375	450	280	265
SCP80/360DS-18,5/4	SCP80/360DS	100	80	18,5	180M	310	320	192	192	1611	782	375	450	280	265
SCP80/360DS-22/4	SCP80/360DS	100	80	22	180L	310	320	192	192	1649	820	375	450	280	265
SCP80/360DS-30/4	SCP80/360DS	100	80	30	200L	310	320	192	192	1709	880	375	450	280	265
SCP80/360DS-37/4	SCP80/360DS	100	80	37	225S/M	310	320	192	192	1863	1034	375	450	280	265
SCP80/360DS-45/4	SCP80/360DS	100	80	45	225S/M	310	320	192	192	1863	1034	375	450	280	265
SCP80/380DS-7,5/4	SCP80/380DS	100	80	7,5	132M	340	250	192	208	1406	557	386.5	458.5	335	242
SCP80/380DS-11/4	SCP80/380DS	100	80	11	160M	340	250	192	208	1561	712	386.5	458.5	335	242
SCP80/380DS-15/4	SCP80/380DS	100	80	15	160L	340	250	192	208	1605	756	386.5	458.5	335	242
SCP80/380DS-18,5/4	SCP80/380DS	100	80	18,5	180M	340	250	192	208	1631	782	386.5	458.5	335	242
SCP80/380DS-22/4	SCP80/380DS	100	80	22	180L	340	250	192	208	1669	820	386.5	458.5	335	242
SCP80/380DS-30/4	SCP80/380DS	100	80	30	200L	340	250	192	208	1729	880	386.5	458.5	335	242
SCP80/380DS-37/4	SCP80/380DS	100	80	37	225S/M	340	250	192	208	1883	1034	386.5	458.5	335	242
SCP100/270HA-4/4	SCP100/270HA	125	100	4	112M	270	198	165	165	1189	448	338	399	285	230
SCP100/270HA-5,5/4	SCP100/270HA	125	100	5,5	132S	270	198	165	165	1260	519	338	399	285	230
SCP100/270HA-7,5/4	SCP100/270HA	125	100	7,5	132M	270	198	165	165	1298	557	338	399	285	230
SCP100/270HA-11/4	SCP100/270HA	125	100	11	160M	270	198	165	165	1453	712	338	399	285	230
SCP100/280HA-4/4	SCP100/280HA	125	100	4	112M	270	190	175	175	1189	448	338	399	300	250
SCP100/280HA-5,5/4	SCP100/280HA	125	100	5,5	132S	270	190	175	175	1260	519	338	399	300	250
SCP100/280HA-7,5/4	SCP100/280HA	125	100	7,5	132M	270	190	175	175	1298	557	338	399	300	250
SCP100/280HA-11/4	SCP100/280HA	125	100	11	160M	270	190	175	175	1453	712	338	399	300	250
SCP100/280HA-15/4	SCP100/280HA	125	100	15	160L	270	190	175	175	1497	756	338	399	300	250

DIMENSIONAL TABLE (complete unit)

Unit name	P5	P6	HP	SA	SE	SL	A	S1	S2	S3	S4	S5	S6	Pump flange dimensions	Unit weight
														Qty x mm	kg
SCP50/180HA-1,1/4	-	-	418	360	320	830	4	45	70	6	6	19.5	22	4 x 18	126
SCP50/180HA-1,5/4	-	-	418	360	320	830	4	45	70	6	6	19.5	22	4 x 18	126
SCP50/220HA-1,1/4	-	-	426	360	320	830	4	45	47	6	6	19.5	22	4 x 18	99
SCP50/220HA-1,5/4	-	-	426	360	320	830	4	45	47	6	6	19.5	22	4 x 18	99
SCP50/220HA-2,2/4	-	-	426	360	320	830	4	45	47	6	6	19.5	22	4 x 18	99
SCP50/340DS-5,5/4	43	118	610	450	400	1030	4	45	72	7	8	24	27	4 x 18	323
SCP50/340DS-7,5/4	43	118	610	490	440	1150	4	45	72	7	8	24	27	4 x 18	330
SCP50/340DS-11/4	43	118	610	490	440	1150	4	45	72	7	8	24	27	4 x 18	330
SCP50/340DS-15/4	43	118	610	540	490	1290	4	45	72	7	8	24	27	4 x 18	362
SCP50/340DS-18,5/4	43	118	610	540	490	1290	4	45	72	7	8	24	27	4 x 18	362
SCP50/340DS-22/4	43	118	610	540	490	1290	4	45	72	7	8	24	27	4 x 18	362
SCP50/340DS-30/4	43	118	610	540	490	1290	4	45	72	7	8	24	27	4 x 18	362
SCP50/340HA-3/4	-	-	538	390	350	930	4	45	70	6	6	19.5	22	4 x 18	171
SCP50/340HA-4/4	-	-	538	390	350	930	4	45	70	6	6	19.5	22	4 x 18	171
SCP50/340HA-5,5/4	-	-	538	390	350	930	4	45	70	6	6	19.5	22	4 x 18	171
SCP50/340HA-7,5/4	-	-	558	450	400	1030	4	45	70	6	6	19.5	22	4 x 18	187
SCP50/340HA-11/4	-	-	558	490	440	1150	4	45	70	6	6	19.5	22	4 x 18	194
SCP65/390HS-5,5/4	-	-	613	450	400	1030	4	45	84	7	8	24	27	4 x 18	207
SCP65/390HS-7,5/4	-	-	613	450	400	1030	4	45	84	7	8	24	27	4 x 18	207
SCP65/390HS-11/4	-	-	613	490	440	1150	4	45	84	7	8	24	27	4 x 18	214
SCP65/390HS-15/4	-	-	613	490	440	1150	4	45	84	7	8	24	27	4 x 18	214
SCP65/390HS-18,5/4	-	-	613	490	440	1150	4	45	84	7	8	24	27	4 x 18	214
SCP65/390HS-22/4	-	-	613	490	440	1150	4	45	84	7	8	24	27	4 x 18	214
SCP80/200HA-11/2	-	-	508	490	440	1150	4	45	73	7	8	24	27	8 x 18	213
SCP80/200HA-15/2	-	-	508	490	440	1150	4	45	73	7	8	24	27	8 x 18	213
SCP80/200HA-18,5/2	-	-	508	490	440	1150	4	45	73	7	8	24	27	8 x 18	213
SCP80/200HA-22/2	-	-	508	490	440	1150	4	45	73	7	8	24	27	8 x 18	213
SCP80/230HA-1,5/4	-	-	498	390	350	930	4	45	73	7	8	24	27	8 x 18	176
SCP80/230HA-2,2/4	-	-	498	390	350	930	4	45	73	7	8	24	27	8 x 18	176
SCP80/230HA-3/4	-	-	498	390	350	930	4	45	73	7	8	24	27	8 x 18	176
SCP80/230HA-4/4	-	-	498	390	350	930	4	45	73	7	8	24	27	8 x 18	176
SCP80/230HA-5,5/4	-	-	518	450	400	1030	4	45	73	7	8	24	27	8 x 18	192
SCP80/340HA-4/4	-	-	603	390	350	930	4	45	73	7	8	24	27	8 x 18	176
SCP80/340HA-5,5/4	-	-	623	450	400	1030	4	45	73	7	8	24	27	8 x 18	192
SCP80/340HA-7,5/4	-	-	623	450	400	1030	4	45	73	7	8	24	27	8 x 18	192
SCP80/340HA-11/4	-	-	623	490	440	1150	4	45	73	7	8	24	27	8 x 18	199
SCP80/340HA-15/4	-	-	623	490	440	1150	4	45	73	7	8	24	27	8 x 18	199
SCP80/340HA-18,5/4	-	-	623	490	440	1150	4	45	73	7	8	24	27	8 x 18	199
SCP80/360DS-15/4	35	85	733	540	490	1290	4	70	96	7	8	29	32	8 x 18	296
SCP80/360DS-18,5/4	35	85	733	540	490	1290	4	70	96	7	8	29	32	8 x 18	296
SCP80/360DS-22/4	35	85	733	540	490	1290	4	70	96	7	8	29	32	8 x 18	296
SCP80/360DS-30/4	35	85	733	540	490	1290	4	70	96	7	8	29	32	8 x 18	296
SCP80/360DS-37/4	35	85	733	610	550	1440	4	70	96	7	8	29	32	8 x 18	318
SCP80/360DS-45/4	35	85	733	610	550	1440	4	70	96	7	8	29	32	8 x 18	318
SCP80/380DS-7,5/4	52.5	138.5	693	490	440	1150	4	50	72	7	8	28	31	8 x 18	336
SCP80/380DS-11/4	52.5	138.5	693	540	490	1290	4	50	72	7	8	28	31	8 x 18	368
SCP80/380DS-15/4	52.5	138.5	693	540	490	1290	4	50	72	7	8	28	31	8 x 18	368
SCP80/380DS-18,5/4	52.5	138.5	693	610	550	1440	4	50	72	7	8	28	31	8 x 18	390
SCP80/380DS-22/4	52.5	138.5	693	610	550	1440	4	50	72	7	8	28	31	8 x 18	390
SCP80/380DS-30/4	52.5	138.5	693	610	550	1440	4	50	72	7	8	28	31	8 x 18	390
SCP80/380DS-37/4	52.5	138.5	693	610	550	1440	4	50	72	7	8	28	31	8 x 18	390
SCP100/270HA-4/4	-	-	571	490	440	1150	4	45	73	7	8	24	27	8 x 18	224
SCP100/270HA-5,5/4	-	-	571	490	440	1150	4	45	73	7	8	24	27	8 x 18	224
SCP100/270HA-7,5/4	-	-	571	490	440	1150	4	45	73	7	8	24	27	8 x 18	224
SCP100/270HA-11/4	-	-	571	490	440	1150	4	45	73	7	8	24	27	8 x 18	224
SCP100/280HA-4/4	-	-	563	490	440	1150	4	45	73	7	8	24	27	8 x 18	194
SCP100/280HA-5,5/4	-	-	563	490	440	1150	4	45	73	7	8	24	27	8 x 18	194
SCP100/280HA-7,5/4	-	-	563	490	440	1150	4	45	73	7	8	24	27	8 x 18	194
SCP100/280HA-11/4	-	-	563	490	440	1150	4	45	73	7	8	24	27	8 x 18	194
SCP100/280HA-15/4	-	-	563	540	490	1290	4	45	73	7	8	24	27	8 x 18	226

SCP

DIMENSIONAL TABLE (complete unit)

Unit name	Pump size	Flange dimensions		Nominal motor power	Motor casing	H1	H2	H3	H4	L	L0	L1	L2	L3	L4
		DN1	DN2	P2											
SCP100/280HA-18,5/4	SCP100/280HA	125	100	18,5	180M	270	190	175	175	1523	782	338	399	300	250
SCP100/360HA-5,5/4	SCP100/360HA	125	100	5,5	132S	320	245	225	225	1260	519	338	399	350	275
SCP100/360HA-7,5/4	SCP100/360HA	125	100	7,5	132M	320	245	225	225	1298	557	338	399	350	275
SCP100/360HA-11/4	SCP100/360HA	125	100	11	160M	320	245	225	225	1453	712	338	399	350	275
SCP100/360HA-15/4	SCP100/360HA	125	100	15	160L	320	245	225	225	1497	756	338	399	350	275
SCP100/360HA-18,5/4	SCP100/360HA	125	100	18,5	180M	320	245	225	225	1523	782	338	399	350	275
SCP100/360HA-22/4	SCP100/360HA	125	100	22	180L	320	245	225	225	1561	820	338	399	350	275
SCP100/360HA-30/4	SCP100/360HA	125	100	30	200L	320	245	225	225	1621	880	338	399	350	275
SCP100/400HA-15/4	SCP100/400HA	125	100	15	160L	320	245	225	225	1497	756	338	399	350	275
SCP100/400HA-18,5/4	SCP100/400HA	125	100	18,5	180M	320	245	225	225	1523	782	338	399	350	275
SCP100/400HA-22/4	SCP100/400HA	125	100	22	180L	320	245	225	225	1561	820	338	399	350	275
SCP100/400HA-30/4	SCP100/400HA	125	100	30	200L	320	245	225	225	1621	880	338	399	350	275
SCP100/400HA-37/4	SCP100/400HA	125	100	37	225S/M	320	245	225	225	1775	1034	338	399	350	275
SCP100/400HA-45/4	SCP100/400HA	125	100	45	225S/M	320	245	225	225	1775	1034	338	399	350	275
SCP100/400HA-55/4	SCP100/400HA	125	100	55	250S/M	320	245	225	225	1854	1113	338	399	350	275
SCP100/410DS-22/4	SCP100/410DS	125	100	22	180L	350	365	220	220	1759	820	425	510	320	300
SCP100/410DS-30/4	SCP100/410DS	125	100	30	200L	350	365	220	220	1819	880	425	510	320	300
SCP100/410DS-37/4	SCP100/410DS	125	100	37	225S/M	350	365	220	220	1973	1034	425	510	320	300
SCP100/410DS-45/4	SCP100/410DS	125	100	45	225S/M	350	365	220	220	1973	1034	425	510	320	300
SCP100/410DS-55/4	SCP100/410DS	125	100	55	250S/M	350	365	220	220	2052	1113	425	510	320	300
SCP100/410DS-75/4	SCP100/410DS	125	100	75	280S/M	350	365	220	220	2162	1223	425	510	320	300
SCP100/410DS-90/4	SCP100/410DS	125	100	90	280S/M	350	365	220	220	2162	1223	425	510	320	300
SCP125/290HA-7,5/4	SCP125/290HA	150	125	7,5	132M	320	240	213	213	1404	557	385	458	350	275
SCP125/290HA-11/4	SCP125/290HA	150	125	11	160M	320	240	213	213	1559	712	385	458	350	275
SCP125/290HA-15/4	SCP125/290HA	150	125	15	160L	320	240	213	213	1603	756	385	458	350	275
SCP125/290HA-18,5/4	SCP125/290HA	150	125	18,5	180M	320	240	213	213	1629	782	385	458	350	275
SCP125/290HA-22/4	SCP125/290HA	150	125	22	180L	320	240	213	213	1667	820	385	458	350	275
SCP125/330HA-15/4	SCP125/330HA	150	125	15	160L	320	240	213	213	1603	756	385	458	350	286
SCP125/330HA-18,5/4	SCP125/330HA	150	125	18,5	180M	320	240	213	213	1629	782	385	458	350	286
SCP125/330HA-22/4	SCP125/330HA	150	125	22	180L	320	240	213	213	1667	820	385	458	350	286
SCP125/330HA-30/4	SCP125/330HA	150	125	30	200L	320	240	213	213	1727	880	385	458	350	286
SCP125/330HA-37/4	SCP125/330HA	150	125	37	225S/M	320	240	213	213	1881	1034	385	458	350	286
SCP125/330HA-45/4	SCP125/330HA	150	125	45	225S/M	320	240	213	213	1881	1034	385	458	350	286
SCP125/440HA-22/4	SCP125/440HA	150	125	22	180L	400	284	274	274	1667	820	385	458	400	350
SCP125/440HA-30/4	SCP125/440HA	150	125	30	200L	400	284	274	274	1727	880	385	458	400	350
SCP125/440HA-37/4	SCP125/440HA	150	125	37	225S/M	400	284	274	274	1881	1034	385	458	400	350
SCP125/440HA-45/4	SCP125/440HA	150	125	45	225S/M	400	284	274	274	1881	1034	385	458	400	350
SCP125/440HA-55/4	SCP125/440HA	150	125	55	250S/M	400	284	274	274	1960	1113	385	458	400	350
SCP125/440HA-75/4	SCP125/440HA	150	125	75	280S/M	400	284	274	274	2070	1223	385	458	400	350
SCP125/440HA-90/4	SCP125/440HA	150	125	90	280S/M	400	284	274	274	2070	1223	385	458	400	350
SCP125/440HA-110/4	SCP125/440HA	150	125	110	315S/M	400	284	274	274	2273	1426	385	458	400	350
SCP125/460DS-37/4	SCP125/460DS	150	125	37	225S/M	400	478	245	245	2098	1034	480	580	400	350
SCP125/460DS-45/4	SCP125/460DS	150	125	45	225S/M	400	478	245	245	2098	1034	480	580	400	350
SCP125/460DS-55/4	SCP125/460DS	150	125	55	250S/M	400	478	245	245	2177	1113	480	580	400	350
SCP125/460DS-75/4	SCP125/460DS	150	125	75	280S/M	400	478	245	245	2287	1223	480	580	400	350
SCP125/460DS-90/4	SCP125/460DS	150	125	90	280S/M	400	478	245	245	2287	1223	480	580	400	350
SCP125/460DS-110/4	SCP125/460DS	150	125	110	315S/M	400	478	245	245	2490	1426	480	580	400	350
SCP125/460DS-132/4	SCP125/460DS	150	125	132	315S/M	400	478	245	245	2490	1426	480	580	400	350
SCP125/460DS-160/4	SCP125/460DS	150	125	160	315S/M	400	478	245	245	2490	1426	480	580	400	350
SCP125/460DS-200/4	SCP125/460DS	150	125	200	315S/M	400	478	245	245	2490	1426	480	580	400	350
SCP125/470HA-37/4	SCP125/470HA	150	125	37	225S/M	414.5	325	295	295	2069	1034	471	560	420	400
SCP125/470HA-45/4	SCP125/470HA	150	125	45	225S/M	414.5	325	295	295	2069	1034	471	560	420	400
SCP125/470HA-55/4	SCP125/470HA	150	125	55	250S/M	414.5	325	295	295	2148	1113	471	560	420	400
SCP125/470HA-75/4	SCP125/470HA	150	125	75	280S/M	414.5	325	295	295	2258	1223	471	560	420	400
SCP125/470HA-90/4	SCP125/470HA	150	125	90	280S/M	414.5	325	295	295	2258	1223	471	560	420	400
SCP125/470HA-110/4	SCP125/470HA	150	125	110	315S/M	414.5	325	295	295	2461	1426	471	560	420	400
SCP125/470HA-132/4	SCP125/470HA	150	125	132	315S/M	414.5	325	295	295	2461	1426	471	560	420	400
SCP150/290HA-15/4	SCP150/290HA	200	150	15	160L	380	255	220	220	1603	756	385	458	350	265
SCP150/290HA-18,5/4	SCP150/290HA	200	150	18,5	180M	380	255	220	220	1629	782	385	458	350	265
SCP150/290HA-22/4	SCP150/290HA	200	150	22	180L	380	255	220	220	1667	820	385	458	350	265

DIMENSIONAL TABLE (complete unit)

Unit name	P5	P6	HP	SA	SE	SL	A	S1	S2	S3	S4	S5	S6	Pump flange dimensions	Unit weight
														Qty x mm	kg
SCP100/280HA-18,5/4	-	-	563	540	490	1290	4	45	73	7	8	24	27	8 x 18	226
SCP100/360HA-5,5/4	-	-	668	490	440	1150	4	45	73	7	8	24	27	8 x 18	211
SCP100/360HA-7,5/4	-	-	668	490	440	1150	4	45	73	7	8	24	27	8 x 18	211
SCP100/360HA-11/4	-	-	668	490	440	1150	4	45	73	7	8	24	27	8 x 18	211
SCP100/360HA-15/4	-	-	668	540	490	1290	4	45	73	7	8	24	27	8 x 18	243
SCP100/360HA-18,5/4	-	-	668	540	490	1290	4	45	73	7	8	24	27	8 x 18	243
SCP100/360HA-22/4	-	-	668	540	490	1290	4	45	73	7	8	24	27	8 x 18	243
SCP100/360HA-30/4	-	-	668	540	490	1290	4	45	73	7	8	24	27	8 x 18	243
SCP100/400HA-15/4	-	-	668	540	490	1290	4	45	73	7	8	24	27	8 x 18	243
SCP100/400HA-18,5/4	-	-	668	540	490	1290	4	45	73	7	8	24	27	8 x 18	243
SCP100/400HA-22/4	-	-	668	540	490	1290	4	45	73	7	8	24	27	8 x 18	243
SCP100/400HA-30/4	-	-	668	540	490	1290	4	45	73	7	8	24	27	8 x 18	243
SCP100/400HA-37/4	-	-	668	610	550	1440	4	45	73	7	8	24	27	8 x 18	265
SCP100/400HA-45/4	-	-	668	610	550	1440	4	45	73	7	8	24	27	8 x 18	265
SCP100/400HA-55/4	-	-	688	660	600	1640	4	45	73	7	8	24	27	8 x 18	298
SCP100/410DS-22/4	39.5	102	818	610	550	1440	4	80	101	8	10	34	37	8 x 18	373
SCP100/410DS-30/4	39.5	102	818	610	550	1440	4	80	101	8	10	34	37	8 x 18	373
SCP100/410DS-37/4	39.5	102	818	610	550	1440	4	80	101	8	10	34	37	8 x 18	373
SCP100/410DS-45/4	39.5	102	818	610	550	1440	4	80	101	8	10	34	37	8 x 18	373
SCP100/410DS-55/4	39.5	102	838	660	600	1640	4	80	101	8	10	34	37	8 x 18	406
SCP100/410DS-75/4	39.5	102	838	730	670	1840	4	80	101	8	10	34	37	8 x 18	445
SCP100/410DS-90/4	39.5	102	838	730	670	1840	4	80	101	8	10	34	37	8 x 18	445
SCP125/290HA-7,5/4	-	-	663	490	440	1150	4	82	88	7	8	29	32	8 x 18	224
SCP125/290HA-11/4	-	-	663	540	490	1290	4	82	88	7	8	29	32	8 x 18	256
SCP125/290HA-15/4	-	-	663	540	490	1290	4	82	88	7	8	29	32	8 x 18	256
SCP125/290HA-18,5/4	-	-	663	540	490	1290	4	82	88	7	8	29	32	8 x 18	256
SCP125/290HA-22/4	-	-	663	540	490	1290	4	82	88	7	8	29	32	8 x 18	256
SCP125/330HA-15/4	-	-	663	540	490	1290	4	82	88	7	8	29	32	8 x 18	286
SCP125/330HA-18,5/4	-	-	663	540	490	1290	4	82	88	7	8	29	32	8 x 18	286
SCP125/330HA-22/4	-	-	663	540	490	1290	4	82	88	7	8	29	32	8 x 18	286
SCP125/330HA-30/4	-	-	663	610	550	1440	4	82	88	7	8	29	32	8 x 18	308
SCP125/330HA-37/4	-	-	663	610	550	1440	4	82	88	7	8	29	32	8 x 18	308
SCP125/330HA-45/4	-	-	663	610	550	1440	4	82	88	7	8	29	32	8 x 18	308
SCP125/440HA-22/4	-	-	787	610	550	1440	4	82	88	7	8	29	32	8 x 18	338
SCP125/440HA-30/4	-	-	787	610	550	1440	4	82	88	7	8	29	32	8 x 18	338
SCP125/440HA-37/4	-	-	787	610	550	1440	4	82	88	7	8	29	32	8 x 18	338
SCP125/440HA-45/4	-	-	787	610	550	1440	4	82	88	7	8	29	32	8 x 18	338
SCP125/440HA-55/4	-	-	787	610	550	1440	4	82	88	7	8	29	32	8 x 18	338
SCP125/440HA-75/4	-	-	807	730	670	1840	4	82	88	7	8	29	32	8 x 18	410
SCP125/440HA-90/4	-	-	807	730	670	1840	4	82	88	7	8	29	32	8 x 18	410
SCP125/440HA-110/4	-	-	807	860	790	2140	4	82	88	7	8	29	32	8 x 18	540
SCP125/460DS-37/4	45	110	1001	730	670	1840	4	95	120	8	12	44	47	8 x 18	663
SCP125/460DS-45/4	45	110	1001	730	670	1840	4	95	120	8	12	44	47	8 x 18	663
SCP125/460DS-55/4	45	110	1001	730	670	1840	4	95	120	8	12	44	47	8 x 18	663
SCP125/460DS-75/4	45	110	1001	730	670	1840	4	95	120	8	12	44	47	8 x 18	663
SCP125/460DS-90/4	45	110	1001	730	670	1840	4	95	120	8	12	44	47	8 x 18	663
SCP125/460DS-110/4	45	110	1001	730	670	1840	4	95	120	8	12	44	47	8 x 18	663
SCP125/460DS-132/4	45	110	1001	730	670	1840	4	95	120	8	12	44	47	8 x 18	663
SCP125/460DS-160/4	45	110	1001	730	670	1840	4	95	120	8	12	44	47	8 x 18	663
SCP125/460DS-200/4	45	110	1001	730	670	1840	4	95	120	8	12	44	47	8 x 18	663
SCP125/470HA-37/4	-	-	862.5	660	600	1640	4	88	119	8	12	39	42	8 x 18	651
SCP125/470HA-45/4	-	-	862.5	660	600	1640	4	88	119	8	12	39	42	8 x 18	651
SCP125/470HA-55/4	-	-	862.5	660	600	1640	4	88	119	8	12	39	42	8 x 18	651
SCP125/470HA-75/4	-	-	862.5	730	670	1840	4	88	119	8	12	39	42	8 x 18	690
SCP125/470HA-90/4	-	-	862.5	730	670	1840	4	88	119	8	12	39	42	8 x 18	690
SCP125/470HA-110/4	-	-	862.5	730	670	1840	4	88	119	8	12	39	42	8 x 18	690
SCP125/470HA-132/4	-	-	862.5	860	790	2140	4	88	119	8	12	39	42	8 x 18	820
SCP150/290HA-15/4	-	-	738	540	490	1290	4	82	88	7	8	29	32	8 x 22	446
SCP150/290HA-18,5/4	-	-	738	540	490	1290	4	82	88	7	8	29	32	8 x 22	446
SCP150/290HA-22/4	-	-	738	540	490	1290	4	82	88	7	8	29	32	8 x 22	446

SCP

DIMENSIONAL TABLE (complete unit)

Unit name	Pump size	Flange dimensions		Nominal motor power	Motor casing	H1	H2	H3	H4	L	L0	L1	L2	L3	L4
		DN1	DN2	P2											
SCP150/290HA-30/4	SCP150/290HA	200	150	30	200L	380	255	220	220	1727	880	385	458	350	265
SCP150/290HA-37/4	SCP150/290HA	200	150	37	225S/M	380	255	220	220	1881	1034	385	458	350	265
SCP150/350HA-30/4	SCP150/350HA	200	150	30	200L	425	275	252	252	1915	880	471	560	400	350
SCP150/350HA-37/4	SCP150/350HA	200	150	37	225S/M	425	275	252	252	2069	1034	471	560	400	350
SCP150/350HA-45/4	SCP150/350HA	200	150	45	225S/M	425	275	252	252	2069	1034	471	560	400	350
SCP150/350HA-55/4	SCP150/350HA	200	150	55	250S/M	425	275	252	252	2148	1113	471	560	400	350
SCP150/350HA-75/4	SCP150/350HA	200	150	75	280S/M	425	275	252	252	2258	1223	471	560	400	350
SCP150/390HA-18,5/4	SCP150/390HA	200	150	18,5	180M	343	280	229	229	1671	782	411	474	406	330
SCP150/390HA-22/4	SCP150/390HA	200	150	22	180L	343	280	229	229	1709	820	411	474	406	330
SCP150/390HA-30/4	SCP150/390HA	200	150	30	200L	343	280	229	229	1769	880	411	474	406	330
SCP150/390HA-37/4	SCP150/390HA	200	150	37	225S/M	343	280	229	229	1923	1034	411	474	406	330
SCP150/390HA-45/4	SCP150/390HA	200	150	45	225S/M	343	280	229	229	1923	1034	411	474	406	330
SCP150/390HA-55/4	SCP150/390HA	200	150	55	250S/M	343	280	229	229	2002	1113	411	474	406	330
SCP150/390HA-75/4	SCP150/390HA	200	150	75	280S/M	343	280	229	229	2112	1223	411	474	406	330
SCP150/440HA-30/4	SCP150/440HA	200	150	30	200L	425.5	305	274	274	1769	880	411	474	432	381
SCP150/440HA-37/4	SCP150/440HA	200	150	37	225S/M	425.5	305	274	274	1923	1034	411	474	432	381
SCP150/440HA-45/4	SCP150/440HA	200	150	45	225S/M	425.5	305	274	274	1923	1034	411	474	432	381
SCP150/440HA-55/4	SCP150/440HA	200	150	55	250S/M	425.5	305	274	274	2002	1113	411	474	432	381
SCP150/440HA-75/4	SCP150/440HA	200	150	75	280S/M	425.5	305	274	274	2112	1223	411	474	432	381
SCP150/440HA-90/4	SCP150/440HA	200	150	90	280S/M	425.5	305	274	274	2112	1223	411	474	432	381
SCP150/440HA-110/4	SCP150/440HA	200	150	110	315S/M	425.5	305	274	274	2315	1426	411	474	432	381
SCP150/440HA-132/4	SCP150/440HA	200	150	132	315S/M	425.5	305	274	274	2315	1426	411	474	432	381
SCP150/460DS-75/4	SCP150/460DS	200	150	75	280S/M	470	320	225	250	2393	1223	501	665	440	330
SCP150/460DS-90/4	SCP150/460DS	200	150	90	280S/M	470	320	225	250	2393	1223	501	665	440	330
SCP150/460DS-110/4	SCP150/460DS	200	150	110	315S/M	470	320	225	250	2596	1426	501	665	440	330
SCP150/460DS-132/4	SCP150/460DS	200	150	132	315S/M	470	320	225	250	2596	1426	501	665	440	330
SCP150/460DS-160/4	SCP150/460DS	200	150	160	315S/M	470	320	225	250	2596	1426	501	665	440	330
SCP150/460DS-200/4	SCP150/460DS	200	150	200	315S/M	470	320	225	250	2596	1426	501	665	440	330
SCP150/530HA-55/4	SCP150/530HA	200	150	55	250S/M	465	370	320	320	2214	1113	485	612	450	440
SCP150/530HA-75/4	SCP150/530HA	200	150	75	280S/M	465	370	320	320	2324	1223	485	612	450	440
SCP150/530HA-90/4	SCP150/530HA	200	150	90	280S/M	465	370	320	320	2324	1223	485	612	450	440
SCP150/530HA-110/4	SCP150/530HA	200	150	110	315S/M	465	370	320	320	2527	1426	485	612	450	440
SCP150/530HA-132/4	SCP150/530HA	200	150	132	315S/M	465	370	320	320	2527	1426	485	612	450	440
SCP150/530HA-160/4	SCP150/530HA	200	150	160	315S/M	465	370	320	320	2527	1426	485	612	450	440
SCP150/530HA-200/4	SCP150/530HA	200	150	200	315S/M	465	370	320	320	2527	1426	485	612	450	440
SCP150/580HA-45/4	SCP150/580HA	200	150	45	225S/M	455	357	328	328	2161	1034	511	612	570	520
SCP150/580HA-55/4	SCP150/580HA	200	150	55	250S/M	455	357	328	328	2240	1113	511	612	570	520
SCP150/580HA-75/4	SCP150/580HA	200	150	75	280S/M	455	357	328	328	2350	1223	511	612	570	520
SCP150/580HA-90/4	SCP150/580HA	200	150	90	280S/M	455	357	328	328	2350	1223	511	612	570	520
SCP150/580HA-110/4	SCP150/580HA	200	150	110	315S/M	455	357	328	328	2553	1426	511	612	570	520
SCP150/580HA-132/4	SCP150/580HA	200	150	132	315S/M	455	357	328	328	2553	1426	511	612	570	520
SCP150/580HA-160/4	SCP150/580HA	200	150	160	315S/M	455	357	328	328	2553	1426	511	612	570	520
SCP150/580HA-200/4	SCP150/580HA	200	150	200	315S/M	455	357	328	328	2553	1426	511	612	570	520
SCP200/310HA-18,5/4	SCP200/310HA	200	200	18,5	180M	343	270	227	227	1671	782	411	474	406.5	317.5
SCP200/310HA-22/4	SCP200/310HA	200	200	22	180L	343	270	227	227	1709	820	411	474	406.5	317.5
SCP200/310HA-30/4	SCP200/310HA	200	200	30	200L	343	270	227	227	1769	880	411	474	406.5	317.5
SCP200/310HA-37/4	SCP200/310HA	200	200	37	225S/M	343	270	227	227	1923	1034	411	474	406.5	317.5
SCP200/310HA-45/4	SCP200/310HA	200	200	45	225S/M	343	270	227	227	1923	1034	411	474	406.5	317.5
SCP200/310HA-55/4	SCP200/310HA	200	200	55	250S/M	343	270	227	227	2002	1113	411	474	406.5	317.5
SCP200/320HA-22/4	SCP200/320HA	250	200	22	180L	425	290	248	248	1709	820	411	474	432	317.5
SCP200/320HA-30/4	SCP200/320HA	250	200	30	200L	425	290	248	248	1769	880	411	474	432	317.5
SCP200/320HA-37/4	SCP200/320HA	250	200	37	225S/M	425	290	248	248	1923	1034	411	474	432	317.5
SCP200/320HA-45/4	SCP200/320HA	250	200	45	225S/M	425	290	248	248	1923	1034	411	474	432	317.5
SCP200/320HA-55/4	SCP200/320HA	250	200	55	250S/M	425	290	248	248	2002	1113	411	474	432	317.5
SCP200/320HA-75/4	SCP200/320HA	250	200	75	280S/M	425	290	248	248	2112	1223	411	474	432	317.5
SCP200/360HB-37/4	SCP200/360HB	300	200	37	225S/M	450	310	276	276	2069	1034	471	560	470	350
SCP200/360HB-45/4	SCP200/360HB	300	200	45	225S/M	450	310	276	276	2069	1034	471	560	470	350
SCP200/360HB-55/4	SCP200/360HB	300	200	55	250S/M	450	310	276	276	2148	1113	471	560	470	350
SCP200/360HB-75/4	SCP200/360HB	300	200	75	280S/M	450	310	276	276	2258	1223	471	560	470	350
SCP200/360HB-90/4	SCP200/360HB	300	200	90	280S/M	450	310	276	276	2258	1223	471	560	470	350

DIMENSIONAL TABLE (complete unit)

Unit name	P5	P6	HP	SA	SE	SL	A	S1	S2	S3	S4	S5	S6	Pump flange dimensions	Unit weight
														Qty x mm	kg
SCP150/290HA-30/4	-	-	738	610	550	1440	4	82	88	7	8	29	32	8 x 22	468
SCP150/290HA-37/4	-	-	738	610	550	1440	4	82	88	7	8	29	32	8 x 22	468
SCP150/350HA-30/4	-	-	823	660	600	1640	4	88	119	8	12	39	42	8 x 22	511
SCP150/350HA-37/4	-	-	823	660	600	1640	4	88	119	8	12	39	42	8 x 22	511
SCP150/350HA-45/4	-	-	823	660	600	1640	4	88	119	8	12	39	42	8 x 22	511
SCP150/350HA-55/4	-	-	823	660	600	1640	4	88	119	8	12	39	42	8 x 22	511
SCP150/350HA-75/4	-	-	823	730	670	1840	4	88	119	8	12	39	42	8 x 22	550
SCP150/390HA-18,5/4	-	-	726	610	550	1440	4	88	98	8	12	39	42	8 x 22	423
SCP150/390HA-22/4	-	-	726	610	550	1440	4	88	98	8	12	39	42	8 x 22	423
SCP150/390HA-30/4	-	-	726	610	550	1440	4	88	98	8	12	39	42	8 x 22	423
SCP150/390HA-37/4	-	-	746	660	600	1640	4	88	98	8	12	39	42	8 x 22	456
SCP150/390HA-45/4	-	-	746	660	600	1640	4	88	98	8	12	39	42	8 x 22	456
SCP150/390HA-55/4	-	-	746	660	600	1640	4	88	98	8	12	39	42	8 x 22	456
SCP150/390HA-75/4	-	-	746	730	670	1840	4	88	98	8	12	39	42	8 x 22	495
SCP150/440HA-30/4	-	-	833.5	610	550	1440	4	88	98	8	12	39	42	8 x 22	478
SCP150/440HA-37/4	-	-	853.5	660	600	1640	4	88	98	8	12	39	42	8 x 22	511
SCP150/440HA-45/4	-	-	853.5	660	600	1640	4	88	98	8	12	39	42	8 x 22	511
SCP150/440HA-55/4	-	-	853.5	660	600	1640	4	88	98	8	12	39	42	8 x 22	511
SCP150/440HA-75/4	-	-	853.5	660	600	1640	4	88	98	8	12	39	42	8 x 22	511
SCP150/440HA-90/4	-	-	853.5	660	600	1640	4	88	98	8	12	39	42	8 x 22	511
SCP150/440HA-110/4	-	-	853.5	730	670	1840	4	88	98	8	12	39	42	8 x 22	550
SCP150/440HA-132/4	-	-	853.5	730	670	1840	4	88	98	8	12	39	42	8 x 22	550
SCP150/460DS-75/4	70	210	913	730	670	1840	4	95	185	8	12	44	47	8 x 22	850
SCP150/460DS-90/4	70	210	913	730	670	1840	4	95	185	8	12	44	47	8 x 22	850
SCP150/460DS-110/4	70	210	913	860	790	2140	4	95	185	8	12	44	47	8 x 22	980
SCP150/460DS-132/4	70	210	913	860	790	2140	4	95	185	8	12	44	47	8 x 22	980
SCP150/460DS-160/4	70	210	913	860	790	2140	4	95	185	8	12	44	47	8 x 22	980
SCP150/460DS-200/4	70	210	913	860	790	2140	4	95	185	8	12	44	47	8 x 22	980
SCP150/530HA-55/4	-	-	958	730	670	1840	4	110	138	10	16	54	58	8 x 22	757
SCP150/530HA-75/4	-	-	958	730	670	1840	4	110	138	10	16	54	58	8 x 22	757
SCP150/530HA-90/4	-	-	958	730	670	1840	4	110	138	10	16	54	58	8 x 22	757
SCP150/530HA-110/4	-	-	958	860	790	2140	4	110	138	10	16	54	58	8 x 22	887
SCP150/530HA-132/4	-	-	958	860	790	2140	4	110	138	10	16	54	58	8 x 22	887
SCP150/530HA-160/4	-	-	958	860	790	2140	4	110	138	10	16	54	58	8 x 22	887
SCP150/530HA-200/4	-	-	958	860	790	2140	4	110	138	10	16	54	58	8 x 22	887
SCP150/580HA-45/4	-	-	935	860	790	2140	4	110	137	10	16	54	58	8 x 22	900
SCP150/580HA-55/4	-	-	935	860	790	2140	4	110	137	10	16	54	58	8 x 22	900
SCP150/580HA-75/4	-	-	935	860	790	2140	4	110	137	10	16	54	58	8 x 22	900
SCP150/580HA-90/4	-	-	935	860	790	2140	4	110	137	10	16	54	58	8 x 22	900
SCP150/580HA-110/4	-	-	935	860	790	2140	4	110	137	10	16	54	58	8 x 22	900
SCP150/580HA-132/4	-	-	935	860	790	2140	4	110	137	10	16	54	58	8 x 22	900
SCP150/580HA-160/4	-	-	935	860	790	2140	4	110	137	10	16	54	58	8 x 22	900
SCP150/580HA-200/4	-	-	935	860	790	2140	4	110	137	10	16	54	58	8 x 22	900
SCP200/310HA-18,5/4	-	-	716	610	550	1440	4	88	98	8	12	39	42	12 x 22	461
SCP200/310HA-22/4	-	-	716	610	550	1440	4	88	98	8	12	39	42	12 x 22	461
SCP200/310HA-30/4	-	-	716	610	550	1440	4	88	98	8	12	39	42	12 x 22	461
SCP200/310HA-37/4	-	-	736	660	600	1640	4	88	98	8	12	39	42	12 x 22	494
SCP200/310HA-45/4	-	-	736	660	600	1640	4	88	98	8	12	39	42	12 x 22	494
SCP200/310HA-55/4	-	-	736	660	600	1640	4	88	98	8	12	39	42	12 x 22	494
SCP200/320HA-22/4	-	-	818	610	550	1440	4	88	98	8	12	39	42	12 x 22	503
SCP200/320HA-30/4	-	-	818	610	550	1440	4	88	98	8	12	39	42	12 x 22	503
SCP200/320HA-37/4	-	-	838	660	600	1640	4	88	98	8	12	39	42	12 x 22	536
SCP200/320HA-45/4	-	-	838	660	600	1640	4	88	98	8	12	39	42	12 x 22	536
SCP200/320HA-55/4	-	-	838	660	600	1640	4	88	98	8	12	39	42	12 x 22	536
SCP200/320HA-75/4	-	-	838	730	670	1840	4	88	98	8	12	39	42	12 x 22	575
SCP200/360HB-37/4	-	-	883	660	600	1640	4	88	119	8	12	39	42	12 x 22	611
SCP200/360HB-45/4	-	-	883	660	600	1640	4	88	119	8	12	39	42	12 x 22	611
SCP200/360HB-55/4	-	-	883	730	670	1840	4	88	119	8	12	39	42	12 x 22	650
SCP200/360HB-75/4	-	-	883	730	670	1840	4	88	119	8	12	39	42	12 x 22	650
SCP200/360HB-90/4	-	-	883	730	670	1840	4	88	119	8	12	39	42	12 x 22	650

SCP

DIMENSIONAL TABLE (complete unit)

Unit name	Pump size	Flange dimensions		Nominal motor power	Motor casing	H1	H2	H3	H4	L	L0	L1	L2	L3	L4
		DN1	DN2	P2											
SCP200/360HB-110/4	SCP200/360HB	300	200	110	315S/M	450	310	276	276	2461	1426	471	560	470	350
SCP200/370HA-37/4	SCP200/370HA	200	200	37	225S/M	430	310	270	270	2069	1034	471	560	420	350
SCP200/370HA-45/4	SCP200/370HA	200	200	45	225S/M	430	310	270	270	2069	1034	471	560	420	350
SCP200/370HA-55/4	SCP200/370HA	200	200	55	250S/M	430	310	270	270	2148	1113	471	560	420	350
SCP200/370HA-75/4	SCP200/370HA	200	200	75	280S/M	430	310	270	270	2258	1223	471	560	420	350
SCP200/370HA-90/4	SCP200/370HA	200	200	90	280S/M	430	310	270	270	2258	1223	471	560	420	350
SCP200/370HA-110/4	SCP200/370HA	200	200	110	315S/M	430	310	270	270	2461	1426	471	560	420	350
SCP200/370HA-132/4	SCP200/370HA	200	200	132	315S/M	430	310	270	270	2461	1426	471	560	420	350
SCP200/390HA-37/4	SCP200/390HA	250	200	37	225S/M	464	315	292	292	2175	1034	525	612	483	381
SCP200/390HA-45/4	SCP200/390HA	250	200	45	225S/M	464	315	292	292	2175	1034	525	612	483	381
SCP200/390HA-55/4	SCP200/390HA	250	200	55	250S/M	464	315	292	292	2254	1113	525	612	483	381
SCP200/390HA-75/4	SCP200/390HA	250	200	75	280S/M	464	315	292	292	2364	1223	525	612	483	381
SCP200/390HA-90/4	SCP200/390HA	250	200	90	280S/M	464	315	292	292	2364	1223	525	612	483	381
SCP200/390HA-110/4	SCP200/390HA	250	200	110	315S/M	464	315	292	292	2567	1426	525	612	483	381
SCP200/390HA-132/4	SCP200/390HA	250	200	132	315S/M	464	315	292	292	2567	1426	525	612	483	381
SCP200/440HA-45/4	SCP200/440HA	250	200	45	225S/M	465	330	300	300	2135	1034	485	612	440	400
SCP200/440HA-55/4	SCP200/440HA	250	200	55	250S/M	465	330	300	300	2214	1113	485	612	440	400
SCP200/440HA-75/4	SCP200/440HA	250	200	75	280S/M	465	330	300	300	2324	1223	485	612	440	400
SCP200/440HA-90/4	SCP200/440HA	250	200	90	280S/M	465	330	300	300	2324	1223	485	612	440	400
SCP200/440HA-110/4	SCP200/440HA	250	200	110	315S/M	465	330	300	300	2527	1426	485	612	440	400
SCP200/440HA-132/4	SCP200/440HA	250	200	132	315S/M	465	330	300	300	2527	1426	485	612	440	400
SCP200/440HA-160/4	SCP200/440HA	250	200	160	315S/M	465	330	300	300	2527	1426	485	612	440	400
SCP200/460HA-55/4	SCP200/460HA	250	200	55	250S/M	463.5	344	298.5	298.5	2254	1113	525	612	482.5	458
SCP200/460HA-75/4	SCP200/460HA	250	200	75	280S/M	463.5	344	298.5	298.5	2364	1223	525	612	482.5	458
SCP200/460HA-90/4	SCP200/460HA	250	200	90	280S/M	463.5	344	298.5	298.5	2364	1223	525	612	482.5	458
SCP200/460HA-110/4	SCP200/460HA	250	200	110	315S/M	463.5	344	298.5	298.5	2567	1426	525	612	482.5	458
SCP200/460HA-132/4	SCP200/460HA	250	200	132	315S/M	463.5	344	298.5	298.5	2567	1426	525	612	482.5	458
SCP200/460HA-160/4	SCP200/460HA	250	200	160	315S/M	463.5	344	298.5	298.5	2567	1426	525	612	482.5	458
SCP200/460HA-200/4	SCP200/460HA	250	200	200	315S/M	463.5	344	298.5	298.5	2567	1426	525	612	482.5	458
SCP200/460HA-250/4	SCP200/460HA	250	200	250	315L	463.5	344	298.5	298.5	1141	-	525	612	482.5	458
SCP200/480HA-75/4	SCP200/480HA	200	200	75	280S/M	464	364	343	343	2364	1223	525	612	470	457
SCP200/480HA-90/4	SCP200/480HA	200	200	90	280S/M	464	364	343	343	2364	1223	525	612	470	457
SCP200/480HA-110/4	SCP200/480HA	200	200	110	315S/M	464	364	343	343	2567	1426	525	612	470	457
SCP200/480HA-132/4	SCP200/480HA	200	200	132	315S/M	464	364	343	343	2567	1426	525	612	470	457
SCP200/480HA-160/4	SCP200/480HA	200	200	160	315S/M	464	364	343	343	2567	1426	525	612	470	457
SCP200/480HA-200/4	SCP200/480HA	200	200	200	315S/M	464	364	343	343	2567	1426	525	612	470	457
SCP200/550HA-90/4	SCP200/550HA	200	200	90	280S/M	464	364	343	343	2364	1223	525	612	470	457
SCP200/550HA-110/4	SCP200/550HA	200	200	110	315S/M	464	364	343	343	2567	1426	525	612	470	457
SCP200/550HA-132/4	SCP200/550HA	200	200	132	315S/M	464	364	343	343	2567	1426	525	612	470	457
SCP200/550HA-160/4	SCP200/550HA	200	200	160	315S/M	464	364	343	343	2567	1426	525	612	470	457
SCP200/550HA-200/4	SCP200/550HA	200	200	200	315S/M	464	364	343	343	2567	1426	525	612	470	457
SCP200/550HA-250/4	SCP200/550HA	200	200	250	315L	464	364	343	343	1141	-	525	612	470	457
SCP200/550HA-315/4	SCP200/550HA	200	200	315	355M/L	464	364	343	343	2818	1677	525	612	470	457
SCP200/560HA-160/4	SCP200/560HA	250	200	160	315S/M	546	397	356	356	2717	1426	594	693	521	458
SCP200/560HA-200/4	SCP200/560HA	250	200	200	315S/M	546	397	356	356	2717	1426	594	693	521	458
SCP200/560HA-250/4	SCP200/560HA	250	200	250	315L	546	397	356	356	1291	-	594	693	521	458
SCP200/560HA-315/4	SCP200/560HA	250	200	315	355M/L	546	397	356	356	2968	1677	594	693	521	458
SCP200/560HA-355/4	SCP200/560HA	250	200	355	355M/L	546	397	356	356	2968	1677	594	693	521	458
SCP200/660DV-110/4	SCP200/660DV	250	200	110	315S/M	640	460	440	440	2688	1426	565	693	600	500
SCP200/660DV-132/4	SCP200/660DV	250	200	132	315S/M	640	460	440	440	2688	1426	565	693	600	500
SCP200/660DV-160/4	SCP200/660DV	250	200	160	315S/M	640	460	440	440	2688	1426	565	693	600	500
SCP200/660DV-200/4	SCP200/660DV	250	200	200	315S/M	640	460	440	440	2688	1426	565	693	600	500
SCP200/660DV-250/4	SCP200/660DV	250	200	250	315L	640	460	440	440	1262	-	565	693	600	500
SCP200/660DV-315/4	SCP200/660DV	250	200	315	355M/L	640	460	440	440	2939	1677	565	693	600	500
SCP200/660DV-355/4	SCP200/660DV	250	200	355	355M/L	640	460	440	440	2939	1677	565	693	600	500
SCP200/660DV-400/4	SCP200/660DV	250	200	400	355M/L	640	460	440	440	2939	1677	565	693	600	500
SCP200/660DV-450/4	SCP200/660DV	250	200	450	355A/B	640	460	440	440	3134	1872	565	693	600	500
SCP200/660DV-500/4	SCP200/660DV	250	200	500	355A/B	640	460	440	440	3134	1872	565	693	600	500
SCP250/250HA-15/4	SCP250/250HA	250	250	15	160L	410	265	222	222	1585	756	367	458	370	260
SCP250/250HA-18,5/4	SCP250/250HA	250	250	18,5	180M	410	265	222	222	1611	782	367	458	370	260
SCP250/250HA-22/4	SCP250/250HA	250	250	22	180L	410	265	222	222	1649	820	367	458	370	260

DIMENSIONAL TABLE (complete unit)

Unit name	P5	P6	HP	SA	SE	SL	A	S1	S2	S3	S4	S5	S6	Pump flange dimensions	Unit weight
														Qty x mm	kg
SCP200/360HB-110/4	-	-	883	730	670	1840	4	88	119	8	12	39	42	12 x 22	650
SCP200/370HA-37/4	-	-	863	660	600	1640	4	88	119	8	12	39	42	12 x 22	626
SCP200/370HA-45/4	-	-	863	660	600	1640	4	88	119	8	12	39	42	12 x 22	626
SCP200/370HA-55/4	-	-	863	660	600	1640	4	88	119	8	12	39	42	12 x 22	626
SCP200/370HA-75/4	-	-	863	730	670	1840	4	88	119	8	12	39	42	12 x 22	665
SCP200/370HA-90/4	-	-	863	730	670	1840	4	88	119	8	12	39	42	12 x 22	665
SCP200/370HA-110/4	-	-	863	730	670	1840	4	88	119	8	12	39	42	12 x 22	665
SCP200/370HA-132/4	-	-	863	860	790	2140	4	88	119	8	12	39	42	12 x 22	795
SCP200/390HA-37/4	-	-	902	660	600	1640	4	110	134	10	16	54	58	12 x 22	730
SCP200/390HA-45/4	-	-	902	660	600	1640	4	110	134	10	16	54	58	12 x 22	730
SCP200/390HA-55/4	-	-	902	730	670	1840	4	110	134	10	16	54	58	12 x 22	769
SCP200/390HA-75/4	-	-	902	730	670	1840	4	110	134	10	16	54	58	12 x 22	769
SCP200/390HA-90/4	-	-	902	730	670	1840	4	110	134	10	16	54	58	12 x 22	769
SCP200/390HA-110/4	-	-	902	730	670	1840	4	110	134	10	16	54	58	12 x 22	769
SCP200/390HA-132/4	-	-	902	860	790	2140	4	110	134	10	16	54	58	12 x 22	899
SCP200/440HA-45/4	-	-	918	730	670	1840	4	110	138	10	16	54	58	12 x 22	650
SCP200/440HA-55/4	-	-	918	730	670	1840	4	110	138	10	16	54	58	12 x 22	650
SCP200/440HA-75/4	-	-	918	730	670	1840	4	110	138	10	16	54	58	12 x 22	650
SCP200/440HA-90/4	-	-	918	730	670	1840	4	110	138	10	16	54	58	12 x 22	650
SCP200/440HA-110/4	-	-	918	860	790	2140	4	110	138	10	16	54	58	12 x 22	780
SCP200/440HA-132/4	-	-	918	860	790	2140	4	110	138	10	16	54	58	12 x 22	780
SCP200/440HA-160/4	-	-	918	860	790	2140	4	110	138	10	16	54	58	12 x 22	780
SCP200/460HA-55/4	-	-	930.5	730	670	1840	4	110	134	10	16	54	58	12 x 22	940
SCP200/460HA-75/4	-	-	930.5	730	670	1840	4	110	134	10	16	54	58	12 x 22	940
SCP200/460HA-90/4	-	-	930.5	730	670	1840	4	110	134	10	16	54	58	12 x 22	940
SCP200/460HA-110/4	-	-	930.5	730	670	1840	4	110	134	10	16	54	58	12 x 22	940
SCP200/460HA-132/4	-	-	930.5	860	790	2140	4	110	134	10	16	54	58	12 x 22	1070
SCP200/460HA-160/4	-	-	930.5	860	790	2140	4	110	134	10	16	54	58	12 x 22	1070
SCP200/460HA-200/4	-	-	930.5	860	790	2140	4	110	134	10	16	54	58	12 x 22	1070
SCP200/460HA-250/4	-	-	989.5	800	740	2250	4	110	134	10	16	54	58	12 x 22	750
SCP200/480HA-75/4	-	-	951	730	670	1840	4	110	134	10	16	54	58	12 x 22	889
SCP200/480HA-90/4	-	-	951	730	670	1840	4	110	134	10	16	54	58	12 x 22	889
SCP200/480HA-110/4	-	-	951	730	670	1840	4	110	134	10	16	54	58	12 x 22	889
SCP200/480HA-132/4	-	-	951	860	790	2140	4	110	134	10	16	54	58	12 x 22	1019
SCP200/480HA-160/4	-	-	951	860	790	2140	4	110	134	10	16	54	58	12 x 22	1019
SCP200/480HA-200/4	-	-	951	860	790	2140	4	110	134	10	16	54	58	12 x 22	1019
SCP200/550HA-90/4	-	-	951	730	670	1840	4	110	134	10	16	54	58	12 x 22	889
SCP200/550HA-110/4	-	-	951	730	670	1840	4	110	134	10	16	54	58	12 x 22	889
SCP200/550HA-132/4	-	-	951	860	790	2140	4	110	134	10	16	54	58	12 x 22	1019
SCP200/550HA-160/4	-	-	951	860	790	2140	4	110	134	10	16	54	58	12 x 22	1019
SCP200/550HA-200/4	-	-	1010	800	740	2250	4	110	134	10	16	54	58	12 x 22	699
SCP200/550HA-250/4	-	-	1010	800	740	2250	4	110	134	10	16	54	58	12 x 22	699
SCP200/550HA-315/4	-	-	1010	800	740	2250	4	110	134	10	16	54	58	12 x 22	699
SCP200/560HA-160/4	-	-	1125	800	740	2250	4	130	156	12	20	69	73.5	12 x 22	770
SCP200/560HA-200/4	-	-	1125	800	740	2250	4	130	156	12	20	69	73.5	12 x 22	770
SCP200/560HA-250/4	-	-	1125	800	740	2250	4	130	156	12	20	69	73.5	12 x 22	770
SCP200/560HA-315/4	-	-	1125	800	740	2250	4	130	156	12	20	69	73.5	12 x 22	770
SCP200/560HA-355/4	-	-	1125	800	740	2250	4	130	156	12	20	69	73.5	12 x 22	770
SCP200/660DV-110/4	-	-	1282	800	740	2250	4	130	156	12	20	69	73.5	12 x 22	1100
SCP200/660DV-132/4	-	-	1282	800	740	2250	4	130	156	12	20	69	73.5	12 x 22	1100
SCP200/660DV-160/4	-	-	1282	800	740	2250	4	130	156	12	20	69	73.5	12 x 22	1100
SCP200/660DV-200/4	-	-	1282	800	740	2250	4	130	156	12	20	69	73.5	12 x 22	1100
SCP200/660DV-250/4	-	-	1282	800	740	2250	4	130	156	12	20	69	73.5	12 x 22	1100
SCP200/660DV-315/4	-	-	1282	800	740	2250	4	130	156	12	20	69	73.5	12 x 22	1100
SCP200/660DV-355/4	-	-	1282	800	740	2250	4	130	156	12	20	69	73.5	12 x 22	1100
SCP200/660DV-400/4	-	-	1282	800	740	2250	4	130	156	12	20	69	73.5	12 x 22	1100
SCP200/660DV-450/4	-	-	1330	870	800	3000	4	130	156	12	20	69	73.5	12 x 22	1100
SCP200/660DV-500/4	-	-	1282	800	740	2250	4	130	156	12	20	69	73.5	12 x 22	1100
SCP250/250HA-15/4	-	-	857	800	740	2250	4	82	88	7	8	29	32	12 x 26	270
SCP250/250HA-18,5/4	-	-	857	800	740	2250	4	82	88	7	8	29	32	12 x 26	270
SCP250/250HA-22/4	-	-	857	800	740	2250	4	82	88	7	8	29	32	12 x 26	270

SCP

DIMENSIONAL TABLE (complete unit)

Unit name	Pump size	Flange dimensions		Nominal motor power	Motor casing	H1	H2	H3	H4	L	L0	L1	L2	L3	L4
		DN1	DN2	P2											
SCP250/250HA-30/4	SCP250/250HA	250	250	30	200L	410	265	222	222	1709	880	367	458	370	260
SCP250/250HA-37/4	SCP250/250HA	250	250	37	225S/M	410	265	222	222	1863	1034	367	458	370	260
SCP250/360HA-37/4	SCP250/360HA	300	250	37	225S/M	540	340	320	320	2135	1034	485	612	517	380
SCP250/360HA-45/4	SCP250/360HA	300	250	45	225S/M	540	340	320	320	2135	1034	485	612	517	380
SCP250/360HA-55/4	SCP250/360HA	300	250	55	250S/M	540	340	320	320	2214	1113	485	612	517	380
SCP250/360HA-75/4	SCP250/360HA	300	250	75	280S/M	540	340	320	320	2324	1223	485	612	517	380
SCP250/360HA-90/4	SCP250/360HA	300	250	90	280S/M	540	340	320	320	2324	1223	485	612	517	380
SCP250/360HA-110/4	SCP250/360HA	300	250	110	315S/M	540	340	320	320	2527	1426	485	612	517	380
SCP250/390HA-90/4	SCP250/390HA	300	250	90	280S/M	540	340	320	320	2324	1223	485	612	517	380
SCP250/390HA-110/4	SCP250/390HA	300	250	110	315S/M	540	340	320	320	2527	1426	485	612	517	380
SCP250/390HA-132/4	SCP250/390HA	300	250	132	315S/M	540	340	320	320	2527	1426	485	612	517	380
SCP250/390HA-160/4	SCP250/390HA	300	250	160	315S/M	540	340	320	320	2527	1426	485	612	517	380
SCP250/390HA-200/4	SCP250/390HA	300	250	200	315S/M	540	340	320	320	2527	1426	485	612	517	380
SCP250/390HA-250/4	SCP250/390HA	300	250	250	315L	540	340	320	320	1101	-	485	612	517	380
SCP250/450HA-110/4	SCP250/450HA	300	250	110	315S/M	546	380	343	343	2717	1426	594	693	533.5	457
SCP250/450HA-132/4	SCP250/450HA	300	250	132	315S/M	546	380	343	343	2717	1426	594	693	533.5	457
SCP250/450HA-160/4	SCP250/450HA	300	250	160	315S/M	546	380	343	343	2717	1426	594	693	533.5	457
SCP250/450HA-200/4	SCP250/450HA	300	250	200	315S/M	546	380	343	343	2717	1426	594	693	533.5	457
SCP250/450HA-250/4	SCP250/450HA	300	250	250	315L	546	380	343	343	1291	-	594	693	533.5	457
SCP250/450HA-315/4	SCP250/450HA	300	250	315	355M/L	546	380	343	343	2968	1677	594	693	533.5	457
SCP250/570HA-200/4	SCP250/570HA	300	250	200	315S/M	546	415	356	356	2717	1426	594	693	584	492
SCP250/570HA-250/4	SCP250/570HA	300	250	250	315L	546	415	356	356	1291	-	594	693	584	492
SCP250/570HA-315/4	SCP250/570HA	300	250	315	355M/L	546	415	356	356	2968	1677	594	693	584	492
SCP250/570HA-355/4	SCP250/570HA	300	250	355	355M/L	546	415	356	356	2968	1677	594	693	584	492
SCP250/570HA-400/4	SCP250/570HA	300	250	400	355M/L	546	415	356	356	2968	1677	594	693	584	492
SCP250/570HA-450/4	SCP250/570HA	300	250	450	355A/B	546	415	356	356	3163	1872	594	693	584	492
SCP250/570HA-500/4	SCP250/570HA	300	250	500	355A/B	546	415	356	356	3163	1872	594	693	584	492
SCP250/570HA-560/4	SCP250/570HA	300	250	560	355D	546	415	356	356	1291	-	594	693	584	492
SCP250/570HA-630/4	SCP250/570HA	300	250	630	400L	546	415	356	356	1291	-	594	693	584	492
SCP250/700DV-315/4	SCP250/700DV	300	250	315	355M/L	622	465	406.5	406.5	3088.5	1677	643	764.5	635	559
SCP250/700DV-355/4	SCP250/700DV	300	250	355	355M/L	622	465	406.5	406.5	3088.5	1677	643	764.5	635	559
SCP250/700DV-400/4	SCP250/700DV	300	250	400	355M/L	622	465	406.5	406.5	3088.5	1677	643	764.5	635	559
SCP250/700DV-450/4	SCP250/700DV	300	250	450	355A/B	622	465	406.5	406.5	3283.5	1872	643	764.5	635	559
SCP250/700DV-500/4	SCP250/700DV	300	250	500	355A/B	622	465	406.5	406.5	3283.5	1872	643	764.5	635	559
SCP250/700DV-560/4	SCP250/700DV	300	250	560	355D	622	465	406.5	406.5	1411.5	-	643	764.5	635	559
SCP250/700DV-630/4	SCP250/700DV	300	250	630	400L	622	465	406.5	406.5	1411.5	-	643	764.5	635	559
SCP250/740DV-400/4	SCP250/740DV	300	250	400	355M/L	622	465	406.5	406.5	3088.5	1677	643	764.5	635	559
SCP250/740DV-450/4	SCP250/740DV	300	250	450	355A/B	622	465	406.5	406.5	3283.5	1872	643	764.5	635	559
SCP250/740DV-500/4	SCP250/740DV	300	250	500	355A/B	622	465	406.5	406.5	3283.5	1872	643	764.5	635	559
SCP250/740DV-560/4	SCP250/740DV	300	250	560	355D	622	465	406.5	406.5	1411.5	-	643	764.5	635	559
SCP250/740DV-630/4	SCP250/740DV	300	250	630	400L	622	465	406.5	406.5	1411.5	-	643	764.5	635	559
SCP300/330HB-55/4	SCP300/330HB	350	300	55	250S/M	540	320	310	310	2214	1113	485	612	550	390
SCP300/330HB-75/4	SCP300/330HB	350	300	75	280S/M	540	320	310	310	2324	1223	485	612	550	390
SCP300/330HB-90/4	SCP300/330HB	350	300	90	280S/M	540	320	310	310	2324	1223	485	612	550	390
SCP300/330HB-110/4	SCP300/330HB	350	300	110	315S/M	540	320	310	310	2527	1426	485	612	550	390
SCP300/330HB-132/4	SCP300/330HB	350	300	132	315S/M	540	320	310	310	2527	1426	485	612	550	390
SCP300/380HA-110/4	SCP300/380HA	350	300	110	315S/M	546	370	317.5	317.5	2567	1426	525	612	559	390.5
SCP300/380HA-132/4	SCP300/380HA	350	300	132	315S/M	546	370	317.5	317.5	2567	1426	525	612	559	390.5
SCP300/380HA-160/4	SCP300/380HA	350	300	160	315S/M	546	370	317.5	317.5	2567	1426	525	612	559	390.5
SCP300/380HA-200/4	SCP300/380HA	350	300	200	315S/M	546	370	317.5	317.5	2567	1426	525	612	559	390.5
SCP300/380HA-250/4	SCP300/380HA	350	300	250	315L	546	370	317.5	317.5	1141	-	525	612	559	390.5
SCP300/400HA-110/4	SCP300/400HA	400	300	110	315S/M	610	393	350	350	2633.5	1426	536	667.5	550	350
SCP300/400HA-132/4	SCP300/400HA	400	300	132	315S/M	610	393	350	350	2633.5	1426	536	667.5	550	350
SCP300/400HA-160/4	SCP300/400HA	400	300	160	315S/M	610	393	350	350	2633.5	1426	536	667.5	550	350
SCP300/400HA-200/4	SCP300/400HA	400	300	200	315S/M	610	393	350	350	2633.5	1426	536	667.5	550	350
SCP300/400HA-250/4	SCP300/400HA	400	300	250	315L	610	393	350	350	1207.5	-	536	667.5	550	350
SCP300/490HA-110/4	SCP300/490HA	350	300	110	315S/M	590.5	405	343	343	2717	1426	594	693	584	482
SCP300/490HA-132/4	SCP300/490HA	350	300	132	315S/M	590.5	405	343	343	2717	1426	594	693	584	482
SCP300/490HA-160/4	SCP300/490HA	350	300	160	315S/M	590.5	405	343	343	2717	1426	594	693	584	482
SCP300/490HA-200/4	SCP300/490HA	350	300	200	315S/M	590.5	405	343	343	2717	1426	594	693	584	482
SCP300/490HA-250/4	SCP300/490HA	350	300	250	315L	590.5	405	343	343	1291	-	594	693	584	482

DIMENSIONAL TABLE (complete unit)

Unit name	P5	P6	HP	SA	SE	SL	A	S1	S2	S3	S4	S5	S6	Pump flange dimensions	Unit weight
														Qty x mm	kg
SCP250/250HA-30/4	-	-	857	800	740	2250	4	82	88	7	8	29	32	12 x 26	270
SCP250/250HA-37/4	-	-	857	800	740	2250	4	82	88	7	8	29	32	12 x 26	270
SCP250/360HA-37/4	-	-	1062	800	740	2250	4	110	138	10	16	54	58	12 x 26	540
SCP250/360HA-45/4	-	-	1062	800	740	2250	4	110	138	10	16	54	58	12 x 26	540
SCP250/360HA-55/4	-	-	1062	800	740	2250	4	110	138	10	16	54	58	12 x 26	540
SCP250/360HA-75/4	-	-	1062	800	740	2250	4	110	138	10	16	54	58	12 x 26	540
SCP250/360HA-90/4	-	-	1062	800	740	2250	4	110	138	10	16	54	58	12 x 26	540
SCP250/360HA-110/4	-	-	1062	800	740	2250	4	110	138	10	16	54	58	12 x 26	540
SCP250/390HA-90/4	-	-	1062	800	740	2250	4	110	138	10	16	54	58	12 x 26	540
SCP250/390HA-110/4	-	-	1062	800	740	2250	4	110	138	10	16	54	58	12 x 26	540
SCP250/390HA-132/4	-	-	1062	800	740	2250	4	110	138	10	16	54	58	12 x 26	540
SCP250/390HA-160/4	-	-	1062	800	740	2250	4	110	138	10	16	54	58	12 x 26	540
SCP250/390HA-200/4	-	-	1062	800	740	2250	4	110	138	10	16	54	58	12 x 26	540
SCP250/390HA-250/4	-	-	1062	800	740	2250	4	110	138	10	16	54	58	12 x 26	540
SCP250/450HA-110/4	-	-	1108	800	740	2250	4	130	156	12	20	69	73.5	12 x 26	906
SCP250/450HA-132/4	-	-	1108	800	740	2250	4	130	156	12	20	69	73.5	12 x 26	906
SCP250/450HA-160/4	-	-	1108	800	740	2250	4	130	156	12	20	69	73.5	12 x 26	906
SCP250/450HA-200/4	-	-	1108	800	740	2250	4	130	156	12	20	69	73.5	12 x 26	906
SCP250/450HA-250/4	-	-	1108	800	740	2250	4	130	156	12	20	69	73.5	12 x 26	906
SCP250/450HA-315/4	-	-	1108	800	740	2250	4	130	156	12	20	69	73.5	12 x 26	906
SCP250/570HA-200/4	-	-	1143	800	740	2250	4	130	156	12	20	69	73.5	12 x 26	975
SCP250/570HA-250/4	-	-	1143	800	740	2250	4	130	156	12	20	69	73.5	12 x 26	975
SCP250/570HA-315/4	-	-	1143	800	740	2250	4	130	156	12	20	69	73.5	12 x 26	975
SCP250/570HA-355/4	-	-	1143	800	740	2250	4	130	156	12	20	69	73.5	12 x 26	975
SCP250/570HA-400/4	-	-	1143	800	740	2250	4	130	156	12	20	69	73.5	12 x 26	975
SCP250/570HA-450/4	-	-	1191	870	800	3000	4	130	156	12	20	69	73.5	12 x 26	975
SCP250/570HA-500/4	-	-	1191	870	800	3000	4	130	156	12	20	69	73.5	12 x 26	975
SCP250/570HA-560/4	-	-	1191	870	800	3000	4	130	156	12	20	69	73.5	12 x 26	975
SCP250/570HA-630/4	-	-	1143	800	740	2250	4	130	156	12	20	69	73.5	12 x 26	975
SCP250/700DV-315/4	-	-	1269	800	740	2250	4	146	178	14	22	79	84	12 x 26	1480
SCP250/700DV-355/4	-	-	1269	800	740	2250	4	146	178	14	22	79	84	12 x 26	1480
SCP250/700DV-400/4	-	-	1269	800	740	2250	4	146	178	14	22	79	84	12 x 26	1480
SCP250/700DV-450/4	-	-	1317	870	800	3000	4	146	178	14	22	79	84	12 x 26	1480
SCP250/700DV-500/4	-	-	1269	800	740	2250	4	146	178	14	22	79	84	12 x 26	1480
SCP250/700DV-560/4	-	-	1317	870	800	3000	4	146	178	14	22	79	84	12 x 26	1480
SCP250/700DV-630/4	-	-	1317	870	800	3000	4	146	178	14	22	79	84	12 x 26	1480
SCP250/740DV-400/4	-	-	1269	800	740	2250	4	146	178	14	22	79	84	12 x 26	1480
SCP250/740DV-450/4	-	-	1317	870	800	3000	4	146	178	14	22	79	84	12 x 26	1480
SCP250/740DV-500/4	-	-	1317	870	800	3000	4	146	178	14	22	79	84	12 x 26	1480
SCP250/740DV-560/4	-	-	1317	870	800	3000	4	146	178	14	22	79	84	12 x 26	1480
SCP250/740DV-630/4	-	-	1317	870	800	3000	4	146	178	14	22	79	84	12 x 26	1480
SCP300/330HB-55/4	-	-	1042	800	740	2250	4	110	138	10	16	54	58	12 x 26	603
SCP300/330HB-75/4	-	-	1042	800	740	2250	4	110	138	10	16	54	58	12 x 26	603
SCP300/330HB-90/4	-	-	1042	800	740	2250	4	110	138	10	16	54	58	12 x 26	603
SCP300/330HB-110/4	-	-	1042	800	740	2250	4	110	138	10	16	54	58	12 x 26	603
SCP300/330HB-132/4	-	-	1042	800	740	2250	4	110	138	10	16	54	58	12 x 26	603
SCP300/380HA-110/4	-	-	1098	800	740	2250	4	110	134	10	16	54	58	12 x 26	1016
SCP300/380HA-132/4	-	-	1098	800	740	2250	4	110	134	10	16	54	58	12 x 26	1016
SCP300/380HA-160/4	-	-	1098	800	740	2250	4	110	134	10	16	54	58	12 x 26	1016
SCP300/380HA-200/4	-	-	1098	800	740	2250	4	110	134	10	16	54	58	12 x 26	1016
SCP300/380HA-250/4	-	-	1098	800	740	2250	4	110	134	10	16	54	58	12 x 26	1016
SCP300/400HA-110/4	-	-	1185	800	740	2250	4	110	147	10	16	54	58	12 x 26	880
SCP300/400HA-132/4	-	-	1185	800	740	2250	4	110	147	10	16	54	58	12 x 26	880
SCP300/400HA-160/4	-	-	1185	800	740	2250	4	110	147	10	16	54	58	12 x 26	880
SCP300/400HA-200/4	-	-	1185	800	740	2250	4	110	147	10	16	54	58	12 x 26	880
SCP300/400HA-250/4	-	-	1185	800	740	2250	4	110	147	10	16	54	58	12 x 26	880
SCP300/490HA-110/4	-	-	1177.5	800	740	2250	4	130	156	12	20	69	73.5	12 x 26	1110
SCP300/490HA-132/4	-	-	1177.5	800	740	2250	4	130	156	12	20	69	73.5	12 x 26	1110
SCP300/490HA-160/4	-	-	1177.5	800	740	2250	4	130	156	12	20	69	73.5	12 x 26	1110
SCP300/490HA-200/4	-	-	1177.5	800	740	2250	4	130	156	12	20	69	73.5	12 x 26	1110
SCP300/490HA-250/4	-	-	1177.5	800	740	2250	4	130	156	12	20	69	73.5	12 x 26	1110

SCP

DIMENSIONAL TABLE (complete unit)

Unit name	Pump size	Flange dimensions		Nominal motor power	Motor casing	H1	H2	H3	H4	L	L0	L1	L2	L3	L4
		DN1	DN2	P2											
SCP300/490HA-315/4	SCP300/490HA	350	300	315	355M/L	590.5	405	343	343	2968	1677	594	693	584	482
SCP300/490HA-355/4	SCP300/490HA	350	300	355	355M/L	590.5	405	343	343	2968	1677	594	693	584	482
SCP300/490HA-400/4	SCP300/490HA	350	300	400	355M/L	590.5	405	343	343	2968	1677	594	693	584	482
SCP300/570HA-250/4	SCP300/570HA	350	300	250	315L	590.5	442	378	378	1291	-	594	693	628.5	533
SCP300/570HA-315/4	SCP300/570HA	350	300	315	355M/L	590.5	442	378	378	2968	1677	594	693	628.5	533
SCP300/570HA-355/4	SCP300/570HA	350	300	355	355M/L	590.5	442	378	378	2968	1677	594	693	628.5	533
SCP300/570HA-400/4	SCP300/570HA	350	300	400	355M/L	590.5	442	378	378	2968	1677	594	693	628.5	533
SCP300/570HA-450/4	SCP300/570HA	350	300	450	355A/B	590.5	442	378	378	3163	1872	594	693	628.5	533
SCP300/570HA-500/4	SCP300/570HA	350	300	500	355A/B	590.5	442	378	378	3163	1872	594	693	628.5	533
SCP300/570HA-560/4	SCP300/570HA	350	300	560	355D	590.5	442	378	378	1291	-	594	693	628.5	533
SCP300/570HA-630/4	SCP300/570HA	350	300	630	400L	590.5	442	378	378	1291	-	594	693	628.5	533
SCP300/660DV-250/4	SCP300/660DV	350	300	250	315L	725	465	444.5	444.5	1479.5	-	645.5	830	660.5	610
SCP300/660DV-315/4	SCP300/660DV	350	300	315	355M/L	725	465	444.5	444.5	3156.5	1677	645.5	830	660.5	610
SCP300/660DV-355/4	SCP300/660DV	350	300	355	355M/L	725	465	444.5	444.5	3156.5	1677	645.5	830	660.5	610
SCP300/660DV-400/4	SCP300/660DV	350	300	400	355M/L	725	465	444.5	444.5	3156.5	1677	645.5	830	660.5	610
SCP300/660DV-450/4	SCP300/660DV	350	300	450	355A/B	725	465	444.5	444.5	3351.5	1872	645.5	830	660.5	610
SCP300/660DV-500/4	SCP300/660DV	350	300	500	355A/B	725	465	444.5	444.5	3351.5	1872	645.5	830	660.5	610
SCP300/660DV-560/4	SCP300/660DV	350	300	560	355D	725	465	444.5	444.5	1479.5	-	645.5	830	660.5	610
SCP300/660DV-630/4	SCP300/660DV	350	300	630	400L	725	465	444.5	444.5	1479.5	-	645.5	830	660.5	610
SCP300/660DV-800/4	SCP300/660DV	350	300	800		725	465	444.5	444.5	1479.5	-	645.5	830	660.5	610
SCP350/470HA-200/4	SCP350/470HA	450	350	200	315S/M	660	430	360	360	2688	1426	565	693	625	530
SCP350/470HA-250/4	SCP350/470HA	450	350	250	315L	660	430	360	360	1262	-	565	693	625	530
SCP350/470HA-315/4	SCP350/470HA	450	350	315	355M/L	660	430	360	360	2939	1677	565	693	625	530
SCP350/470HA-355/4	SCP350/470HA	450	350	355	355M/L	660	430	360	360	2939	1677	565	693	625	530
SCP350/470HA-400/4	SCP350/470HA	450	350	400	355M/L	660	430	360	360	2939	1677	565	693	625	530
SCP350/500HA-110/6	SCP350/500HA	450	350	110	315S/M	730	480	450	450	2770	1426	597	743	768	550
SCP350/500HA-132/6	SCP350/500HA	450	350	132	315S/M	730	480	450	450	2770	1426	597	743	768	550
SCP350/500HA-160/6	SCP350/500HA	450	350	160	315L	730	480	450	450	1344	-	597	743	768	550
SCP350/500HA-200/6	SCP350/500HA	450	350	200	315L	730	480	450	450	1344	-	597	743	768	550
SCP400/480HA-110/6	SCP400/480HA	500	400	110	315S/M	780	520	445	445	2770	1426	597	743	790	545
SCP400/480HA-132/6	SCP400/480HA	500	400	132	315S/M	780	520	445	445	2770	1426	597	743	790	545
SCP400/480HA-160/6	SCP400/480HA	500	400	160	315L	780	520	445	445	1344	-	597	743	790	545
SCP400/480HA-200/6	SCP400/480HA	500	400	200	315L	780	520	445	445	1344	-	597	743	790	545
SCP400/540HA-90/6	SCP400/540HA	500	400	90	315S/M	440	495	465	465	2834	1426	619	785	680	450
SCP400/540HA-110/6	SCP400/540HA	500	400	110	315S/M	440	495	465	465	2834	1426	619	785	680	450
SCP400/540HA-132/6	SCP400/540HA	500	400	132	315S/M	440	495	465	465	2834	1426	619	785	680	450
SCP400/540HA-160/6	SCP400/540HA	500	400	160	315L	440	495	465	465	1408	-	619	785	680	450
SCP400/540HA-200/6	SCP400/540HA	500	400	200	315L	440	495	465	465	1408	-	619	785	680	450
SCP400/540HA-250/6	SCP400/540HA	500	400	250	355M/L	440	495	465	465	3085	1677	619	785	680	450
SCP400/540HA-315/6	SCP400/540HA	500	400	315	355M/L	440	495	465	465	3085	1677	619	785	680	450
SCP400/550HA-160/6	SCP400/550HA	500	400	160	315L	780	495	470	470	1526	-	697	825	760	560
SCP400/550HA-200/6	SCP400/550HA	500	400	200	315L	780	495	470	470	1526	-	697	825	760	560
SCP400/550HA-250/6	SCP400/550HA	500	400	250	355M/L	780	495	470	470	3203	1677	697	825	760	560
SCP400/550HA-315/6	SCP400/550HA	500	400	315	355M/L	780	495	470	470	3203	1677	697	825	760	560
SCP400/660DV-315/4	SCP400/660DV	500	400	315	355M/L	800	515	483	483	3455	1677	815	959	762	660
SCP400/660DV-355/4	SCP400/660DV	500	400	355	355M/L	800	515	483	483	3455	1677	815	959	762	660
SCP400/660DV-400/4	SCP400/660DV	500	400	400	355M/L	800	515	483	483	3455	1677	815	959	762	660
SCP400/660DV-450/4	SCP400/660DV	500	400	450	355A/B	800	515	483	483	3650	1872	815	959	762	660
SCP400/660DV-500/4	SCP400/660DV	500	400	500	355A/B	800	515	483	483	3650	1872	815	959	762	660
SCP400/660DV-560/4	SCP400/660DV	500	400	560	355D	800	515	483	483	1778	-	815	959	762	660
SCP400/660DV-630/4	SCP400/660DV	500	400	630	400L	800	515	483	483	1778	-	815	959	762	660
SCP400/710HA-200/6	SCP400/710HA	450	400	200	315L	800	574	521	521	1532	-	703.5	824.5	864	762
SCP400/710HA-250/6	SCP400/710HA	450	400	250	355M/L	800	574	521	521	3209	1677	703.5	824.5	864	762
SCP400/710HA-315/6	SCP400/710HA	450	400	315	355M/L	800	574	521	521	3209	1677	703.5	824.5	864	762
SCP400/710HA-355/6	SCP400/710HA	450	400	355	355A/B	800	574	521	521	3404	1872	703.5	824.5	864	762
SCP400/710HA-400/6	SCP400/710HA	450	400	400	355A/B	800	574	521	521	3404	1872	703.5	824.5	864	762
SCP400/710HA-450/6	SCP400/710HA	450	400	450	400L	800	574	521	521	1532	-	703.5	824.5	864	762
SCP400/710HA-500/6	SCP400/710HA	450	400	500	450L	800	574	521	521	1532	-	703.5	824.5	864	762
SCP400/710HA-560/6	SCP400/710HA	450	400	560	450A	800	574	521	521	1532	-	703.5	824.5	864	762
SCP400/710HA-630/6	SCP400/710HA	450	400	630	450B	800	574	521	521	1532	-	703.5	824.5	864	762

DIMENSIONAL TABLE (complete unit)

Unit name	P5	P6	HP	SA	SE	SL	A	S1	S2	S3	S4	S5	S6	Pump flange dimensions	Unit weight
														Qty x mm	kg
SCP300/490HA-315/4	-	-	1177.5	800	740	2250	4	130	156	12	20	69	73.5	12 x 26	1110
SCP300/490HA-355/4	-	-	1177.5	800	740	2250	4	130	156	12	20	69	73.5	12 x 26	1110
SCP300/490HA-400/4	-	-	1177.5	800	740	2250	4	130	156	12	20	69	73.5	12 x 26	1110
SCP300/570HA-250/4	-	-	1214.5	800	740	2250	4	130	156	12	20	69	73.5	12 x 26	1255
SCP300/570HA-315/4	-	-	1214.5	800	740	2250	4	130	156	12	20	69	73.5	12 x 26	1255
SCP300/570HA-355/4	-	-	1214.5	800	740	2250	4	130	156	12	20	69	73.5	12 x 26	1255
SCP300/570HA-400/4	-	-	1214.5	800	740	2250	4	130	156	12	20	69	73.5	12 x 26	1255
SCP300/570HA-450/4	-	-	1262.5	870	800	3000	4	130	156	12	20	69	73.5	12 x 26	1255
SCP300/570HA-500/4	-	-	1262.5	870	800	3000	4	130	156	12	20	69	73.5	12 x 26	1255
SCP300/570HA-560/4	-	-	1262.5	870	800	3000	4	130	156	12	20	69	73.5	12 x 26	1255
SCP300/570HA-630/4	-	-	1214.5	800	740	2250	4	130	156	12	20	69	73.5	12 x 26	1255
SCP300/660DV-250/4	-	-	1372	800	740	2250	4	146	182	14	25	89	94	12 x 26	1540
SCP300/660DV-315/4	-	-	1372	800	740	2250	4	146	182	14	25	89	94	12 x 26	1540
SCP300/660DV-355/4	-	-	1372	800	740	2250	4	146	182	14	25	89	94	12 x 26	1540
SCP300/660DV-400/4	-	-	1372	800	740	2250	4	146	182	14	25	89	94	12 x 26	1540
SCP300/660DV-450/4	-	-	1420	870	800	3000	4	146	182	14	25	89	94	12 x 26	1540
SCP300/660DV-500/4	-	-	1420	870	800	3000	4	146	182	14	25	89	94	12 x 26	1540
SCP300/660DV-560/4	-	-	1420	870	800	3000	4	146	182	14	25	89	94	12 x 26	1540
SCP300/660DV-630/4	-	-	1420	870	800	3000	4	146	182	14	25	89	94	12 x 26	1540
SCP300/660DV-800/4	-	-	1372	800	740	2250	4	146	182	14	25	89	94	12 x 26	1540
SCP350/470HA-200/4	-	-	1272	800	740	2250	4	130	156	12	20	69	73.5	16 x 26	1150
SCP350/470HA-250/4	-	-	1272	800	740	2250	4	130	156	12	20	69	73.5	16 x 26	1150
SCP350/470HA-315/4	-	-	1272	800	740	2250	4	130	156	12	20	69	73.5	16 x 26	1150
SCP350/470HA-355/4	-	-	1272	800	740	2250	4	130	156	12	20	69	73.5	16 x 26	1150
SCP350/470HA-400/4	-	-	1272	800	740	2250	4	130	156	12	20	69	73.5	16 x 26	1150
SCP350/500HA-110/6	-	-	1392	800	740	2250	4	130	156	12	20	69	73.5	16 x 26	1125
SCP350/500HA-132/6	-	-	1392	800	740	2250	4	130	156	12	20	69	73.5	16 x 26	1125
SCP350/500HA-160/6	-	-	1392	800	740	2250	4	130	156	12	20	69	73.5	16 x 26	1125
SCP350/500HA-200/6	-	-	1392	800	740	2250	4	130	156	12	20	69	73.5	16 x 26	1125
SCP400/480HA-110/6	-	-	1482	800	740	2250	4	130	156	12	20	69	73.5	16 x 30	1134
SCP400/480HA-132/6	-	-	1482	800	740	2250	4	130	156	12	20	69	73.5	16 x 30	1134
SCP400/480HA-160/6	-	-	1482	800	740	2250	4	130	156	12	20	69	73.5	16 x 30	1134
SCP400/480HA-200/6	-	-	1482	800	740	2250	4	130	156	12	20	69	73.5	16 x 30	1134
SCP400/540HA-90/6	-	-	1117	800	740	2250	4	130	175	12	20	69	73.5	16 x 30	1400
SCP400/540HA-110/6	-	-	1117	800	740	2250	4	130	175	12	20	69	73.5	16 x 30	1400
SCP400/540HA-132/6	-	-	1117	800	740	2250	4	130	175	12	20	69	73.5	16 x 30	1400
SCP400/540HA-160/6	-	-	1117	800	740	2250	4	130	175	12	20	69	73.5	16 x 30	1400
SCP400/540HA-200/6	-	-	1117	800	740	2250	4	130	175	12	20	69	73.5	16 x 30	1400
SCP400/540HA-250/6	-	-	1117	800	740	2250	4	130	175	12	20	69	73.5	16 x 30	1400
SCP400/540HA-315/6	-	-	1117	800	740	2250	4	130	175	12	20	69	73.5	16 x 30	1400
SCP400/550HA-160/6	-	-	1457	800	740	2250	4	146	178	14	22	79	84	16 x 30	1453
SCP400/550HA-200/6	-	-	1457	800	740	2250	4	146	178	14	22	79	84	16 x 30	1453
SCP400/550HA-250/6	-	-	1457	800	740	2250	4	146	178	14	22	79	84	16 x 30	1453
SCP400/550HA-315/6	-	-	1457	800	740	2250	4	146	178	14	22	79	84	16 x 30	1453
SCP400/660DV-315/4	-	-	1545	870	800	3000	4	197	215	14	25	94	99	16 x 30	2700
SCP400/660DV-355/4	-	-	1545	870	800	3000	4	197	215	14	25	94	99	16 x 30	2700
SCP400/660DV-400/4	-	-	1545	870	800	3000	4	197	215	14	25	94	99	16 x 30	2700
SCP400/660DV-450/4	-	-	1575	1160	990	3040	4	197	215	14	25	94	99	16 x 30	2700
SCP400/660DV-500/4	-	-	1575	1160	990	3040	4	197	215	14	25	94	99	16 x 30	2700
SCP400/660DV-560/4	-	-	1575	1160	990	3040	4	197	215	14	25	94	99	16 x 30	2700
SCP400/660DV-630/4	-	-	1545	870	800	3000	4	197	215	14	25	94	99	16 x 30	2700
SCP400/710HA-200/6	-	-	1604	870	800	3000	4	146	178	14	22	79	85.5	16 x 30	2515
SCP400/710HA-250/6	-	-	1604	870	800	3000	4	146	178	14	22	79	85.5	16 x 30	2515
SCP400/710HA-315/6	-	-	1604	870	800	3000	4	146	178	14	22	79	85.5	16 x 30	2515
SCP400/710HA-355/6	-	-	1634	1160	990	3040	4	146	178	14	22	79	85.5	16 x 30	2515
SCP400/710HA-400/6	-	-	1634	1160	990	3040	4	146	178	14	22	79	85.5	16 x 30	2515
SCP400/710HA-450/6	-	-	1604	870	800	3000	4	146	178	14	22	79	85.5	16 x 30	2515
SCP400/710HA-500/6	-	-	1634	1160	990	3040	4	146	178	14	22	79	85.5	16 x 30	2515
SCP400/710HA-560/6	-	-	1634	1160	990	3040	4	146	178	14	22	79	85.5	16 x 30	2515
SCP400/710HA-630/6	-	-	1634	1160	990	3040	4	146	178	14	22	79	85.5	16 x 30	2515

SCP

NOTES

RANGE OF USE

Temperature ranges:	+5° to +90°C	
Max. ambient temperature:	+50°C	
	EXPANSON COMFORT-H	EXPANSON COMFORT-V
Operating pressure to be maintained:	≤ 6 bar	≤ 8 bar
Total installed power:	8000 kW	13000 kW
No. of pumps:	1 - 2	2
Collector DN:	Tapered G1 G11/4 threaded	G11/4 threaded

EXPANSON COMFORT

PRESSURE MAINTENANCE UNIT

Hot water – Cold water

50 Hz

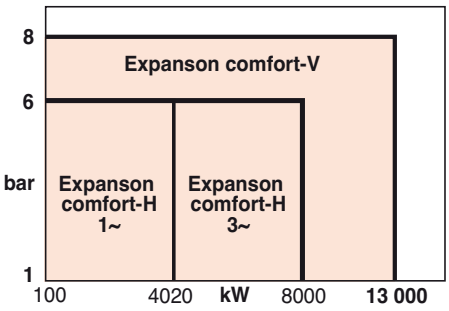

EXPANSON principle COMFORT-V

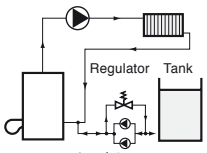

1 maintenance pump
1 back-up pump

EXPANSON principle COMFORT-H

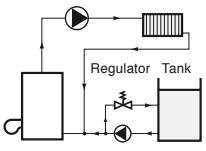

1 maintenance pump

APPLICATIONS

- Maintaining pressure in closed circuits subject to temperature variations.
- Absorbs and compensates for network dilatation.
- Allows for the automatic or manual filling of the system by means of a tank with disconnection between the heating or air conditioning circuit and the mains water supply.

For hot water heating circuits (VDI 2035) and cold water circuits (up to 40% of glycol).

- Residential and office facilities,
- hotels, hospitals, clinics,
- shopping centres, shops,
- junior schools, high schools, universities, barracks.



• EXPANSON COMFORT-V
electronic box version (separate storage tank)



• EXPANSON COMFORT-H
tank assembled pump version

EXPANSON COMFORT

EXPANSON COMFORT-H

Pressure maintenance unit operated by pump and adjustable regulator.

- **EXPANSON COMFORT-H, version 2 pumps recommended for 200 to 3,000 litre tanks.**
- **Module fitted with:**

- Two MUH horizontal multicellular pumps with stainless steel discharge collector.
- availability of a back-up pump.
- one or two adjustable regulators with filter.

- **EXPANSON COMFORT-H, version 1 pump recommended for 200 to 1,500 litre tank.**
- **Module fitted with:**

- one MUH horizontal multicellular pump.
- one adjustable regulator with filter.

- These two versions are fitted with:

- an electronic regulation box (CE+) with automatic pump permutation in 2 pump version,
- one set of insulation valves and one non-return valve per pump,
- one module insulation valve (1 pump version),
- a pressure transmitter to control the pumps and detect safety thresholds.

The unit is assembled on a frame and is to be connected directly to the polypropylene tank PPH Salmson delivered separately.

ADVANTAGES OF THE EXPANSON COMFORT-H MODULE

- **Single-section unit on frame with reduced dimensions and weight.**
- **Economical, easy-to-install modules.**
- **Integral operating automatism.**
- **Preassembled unit to be connected directly to a light PPH tank delivered separately for ease of transport and installation.**
- **Automatic filling with water line with disconnections between heating or air conditioning circuit and supplying with mains water.**
- **Easy service launch with display and adjustment thresholds grouped together in the box.**

IDENTIFICATION

EXPANSON COMFORT-H305-2-CE-T-2D

Name of range

H: Standard Horizontal Pump
V: Standard Vertical Pump

Nominal flow rate in m3/h

Total number of impellers per pump:

Module operating mode
1: 1 pump
2: 2 pumps including 1 back-up

Automatism: CE: Electronic control

Supply voltage:
T: Three-phase 400V / M: Single phase 230V

Number of regulators:
Nothing: 1 regulator
2D: 2 regulators

EXPANSON DESIGN COMFORT-V

Pressure maintenance unit operated by pump and adjustable regulator.

- **EXPANSON COMFORT-V recommended for 200 to 5,000 litre tank**
- **Module fitted with:**

- two vertical multicellular pumps (one as a back-up) for reinjection of water in the network,
- one adjustable regulator allowing the expanded volume to pass into the tank (with protective filter),
- an electronic regulation box (CE+) with automatic pump permutation,
- two 304 stainless steel collectors,
- one set of insulation valves at suction and discharge points of each pump,
- one non-return valve per pump assembled between flanges,
- a pressure transmitter to control the pumps and detect safety thresholds,
- an automatic, permanent pump degassing system to be connected to the tank.

The unit is assembled on a frame and is to be connected to the PPH Salmson polypropylene tank which is delivered separately.

ADVANTAGES OF THE EXPANSON COMFORT-V MODULE

- **Compact unit, reduced floor space requirement.**
- **Easy service launch with display and adjustment thresholds grouped together in the box.**
- **Integral operating automatism.**
- **Operating safety: fault reports, stoppage of lights, permanent availability of a back-up pump.**
- **Preassembled unit to be connected directly to a light PPH tank delivered separately for ease of transport and installation.**
- **Permanent degassing of mechanical seals to be connected to the tank.**
- **Automatic filling with water line with disconnections between heating or air conditioning circuit and supplying with mains water.**

DESCRIPTION OF EXPANSON COMFORT-H AND TANK

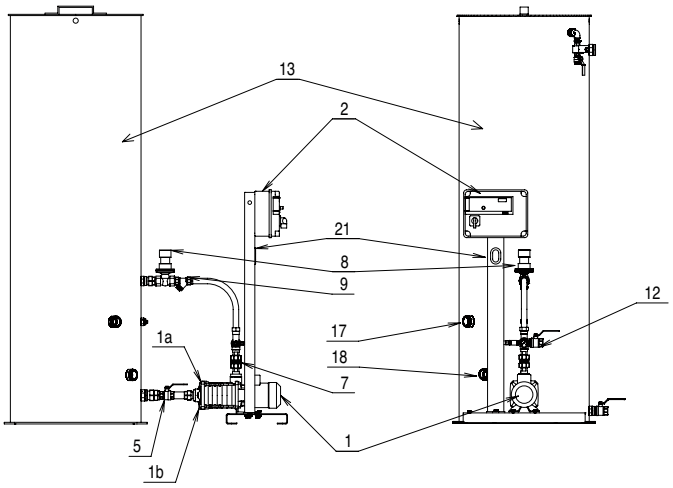

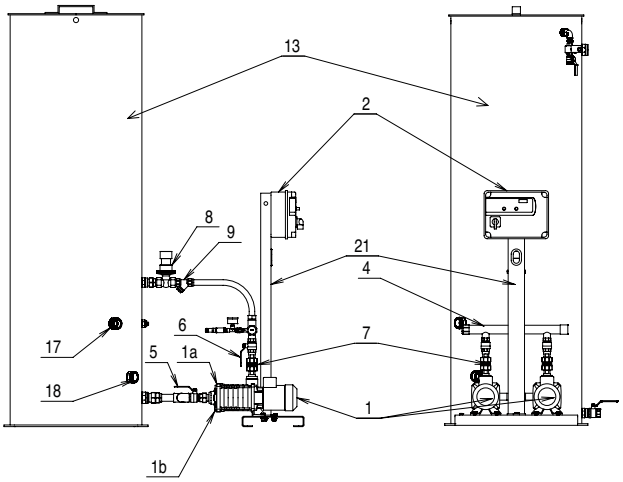

01 - Multicellular horizontal pumps type MUH.
1a - Filler plug.
1b - Emptying plug.
02 - Control box.
04 - Discharge collector.
05 - Insulation valve at suction point.
06 - Insulation valve at discharge point .
07 - Non-return valve.
08 - Regulator.
09 - Filter with protective screen.
12 - Module insulation valve (1 pump version).
13 - Tank.
14 - Pressure gauge.
15 - Pressure sensor.
16 - Sensor insulation valve.
17 - Filling control float.
18 - Water level float.
19 - Solenoid valve
20 - Stop valve.
21 - Bracket.

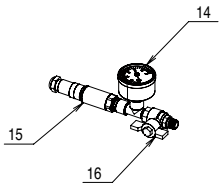

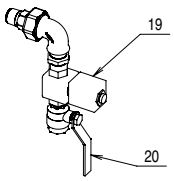

(Delivered with elbow stuck onto tank; solenoid valve and connector in a box connected electrically).

DESCRIPTION OF EXPANSON COMFORT-V

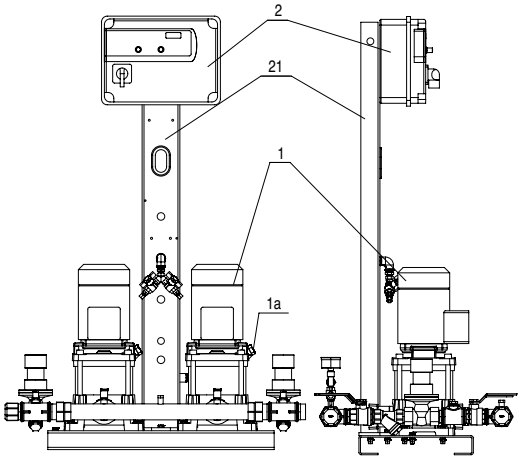

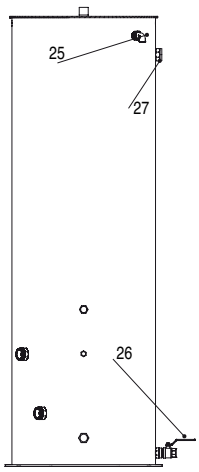

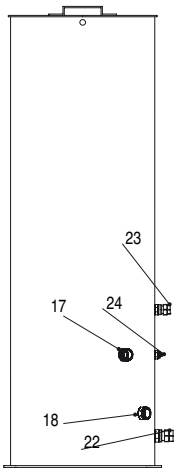

(Delivered connected to box with 5m of cable).

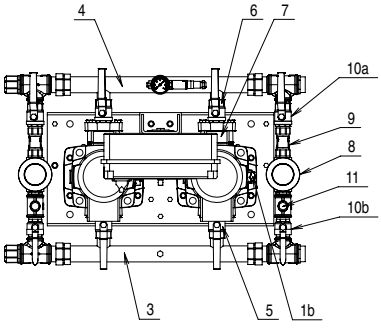

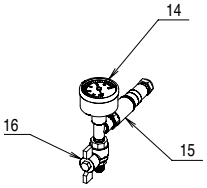

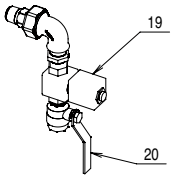

01 - 2 Multicellular vertical pumps type MUV.
1a - Filler plug.
1b - Emptying plug.
02 - Control box.
03 - Suction collector.
04 - Discharge collector.
05 - Insulation valve at suction point.
06 - Insulation valve at discharge point.
07 - Non-return valve.
08 - Regulator.
09 - Filter with protective screen.
10a - Insulation valve.
10b - Insulation valve.
11 - Adjustment plug.
14 - Pressure gauge.
15 - Pressure sensor.
16 - Stop valve.
17 - Filling control float.
18 - Water level float.
19 - Solenoid valve.
20 - Stop valve.
21 - Bracket.
22 - Connection of suction point to tank.
23 - Connection of regulator unit and filter to tank.
24 - Degassing tapping point.
25 - Connection of solenoid valve unit to tank.
26 - Emptying valve.
27 - Overflow opening.

EXPANSON COMFORT

RAPID DETERMINATION OF EXPANSON COMFORT MODULES

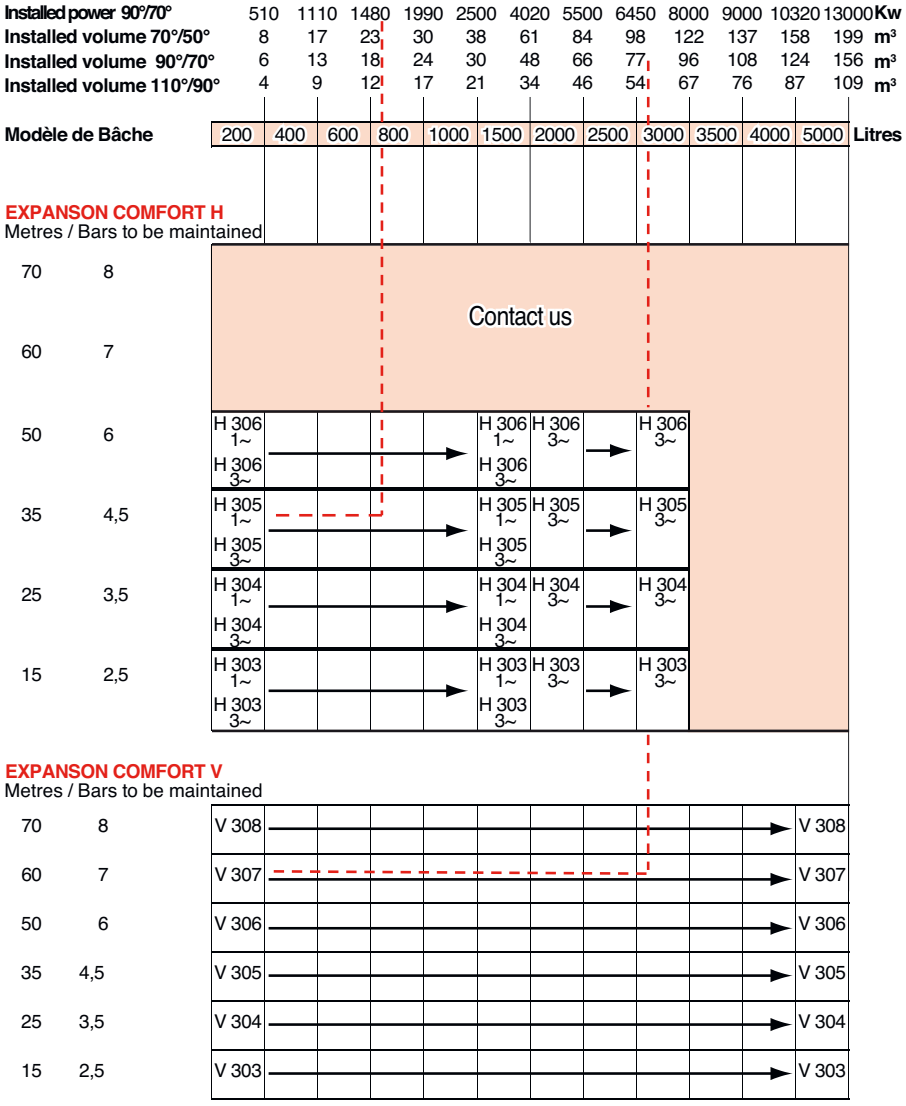

PRE-PROJECT CALCULATIONS

Theoretical installation volume

Conversion of kW/h to litres

Heating element only	for 1 kW/h	for installations
Steel convectors	7 litres	≤ 500 kW
Steel radiators	7 litres	
Cast iron radiators	10 litres	
Heating plates	9 litres	
All heating elements	7 litres	> 500 kW

If the installation volume is not known, the calculation basis used should be 12 litres per kW of useful power.

Example opposite:
pressure to be maintained = 4 bars and installation power = 1600 kW, select:
- EXPANSON module COMFORT-H- 305 - 1 or 2 pumps
- with 800l tank.

HOT WATER CIRCUIT

Expansion volume:
Vexp = Vt x (Cm – Cr)
with:
Vt: total installation volume
Cm: dilatation coefficient at average operating temperature, i.e.:

$$\frac{\text{boiler initiation T° + return T°}}{2}$$

Cr: dilatation coefficient at filling temperature (10° to 12°C)

Example opposite:
static height = 55 metres and
installation volume = 80 m³ (at 90°C), select:
- EXPANSON module COMFORT-V-307-CE-T
- with 3,000l tank.

Dilatation coefficients of water

Temperature °C	coefficient	Temperature °C	coefficient
10°	0,0004	75°	0,0256
20°	0,0018	80°	0,0288
30°	0,0044	85°	0,0322
40°	0,0079	90°	0,0357
50°	0,0119	95°	0,0394
55°	0,0143	100°	0,0431
60°	0,0169	105°	0,0472
65°	0,0196	110°	0,0513
70°	0,0225		

ADJUSTMENT DEFINITION

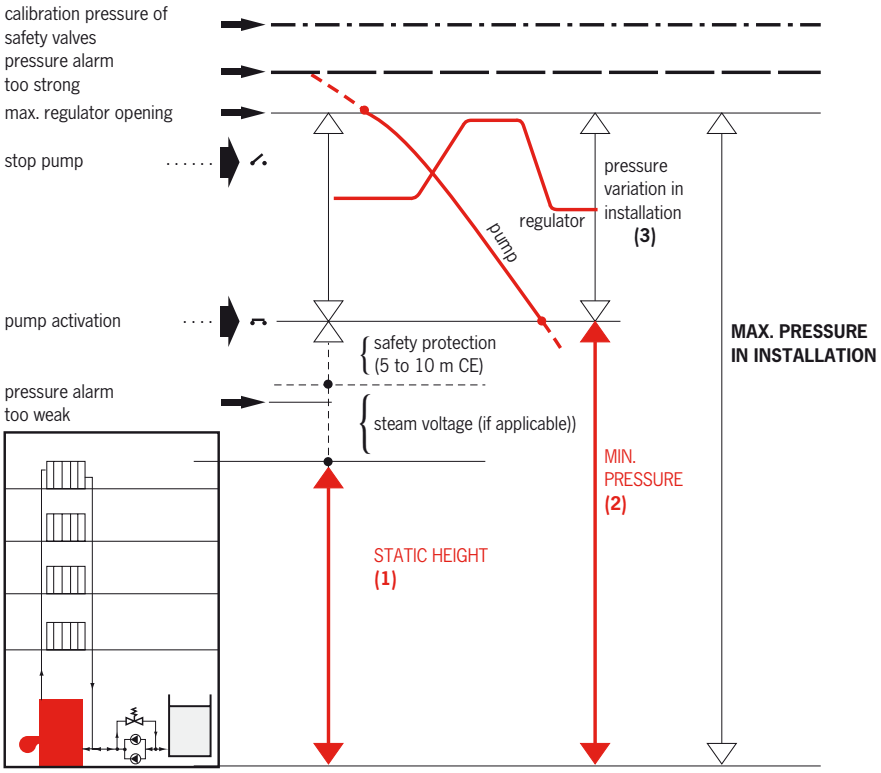

(1): Static height at highest point of installation. Value to be used to enter in the selection table by height scale.
(2): Minimum pressure to be maintained by the module. Value to be used to enter in the selection table by pressure scale.
(3): Corresponds to the module differential of 0.8 to 1 bars.

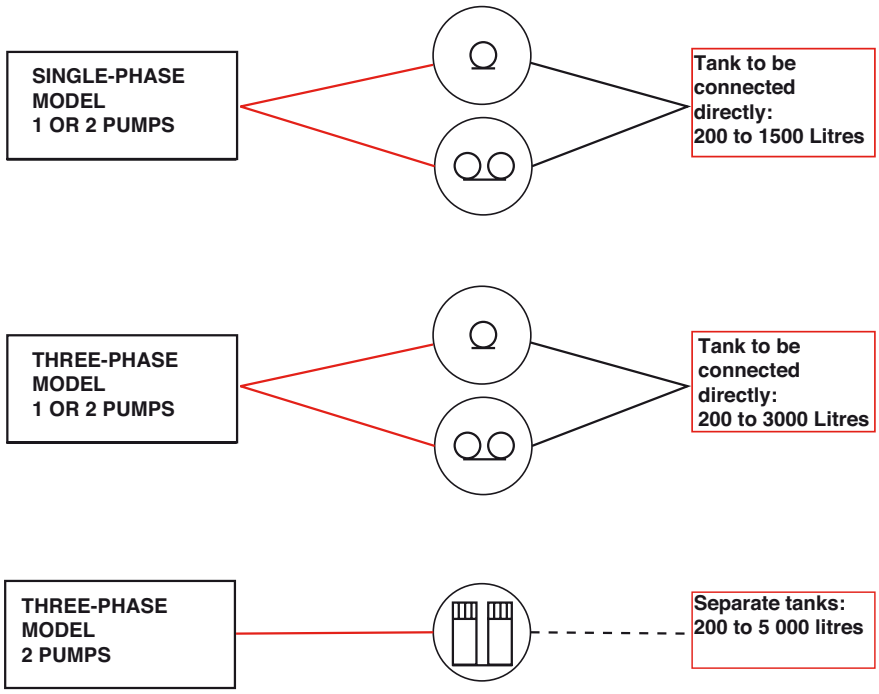

OPERATING PRINCIPLE

a) Temperature increase

Upon activation of the burner (heating network) or stoppage of the refrigeration unit (air conditioning network) the temperature and therefore the pressure in the circuit increase.
As soon as the pressure exceeds the adjustment value of the regulator, the latter opens and allows the surplus volume of dilated water (expansion phase) to escape into the storage tank until the adjustment value is restored.

b) Temperature decrease

Upon deactivation of the burner (heating mode) or activation of the refrigeration unit (air conditioning network) the temperature of the fluid decreases and the static pressure drops (contraction phase).
As soon as the pressure reaches the minimum pressure threshold to be maintained in the system, the pump is activated by the control transmitter. The pump applies suction in the storage tank and discharges into the circuit to increase the pressure until the pump deactivation value is reached.
When the pressure in the system is stable, the regulator and the pump are no longer in operation.

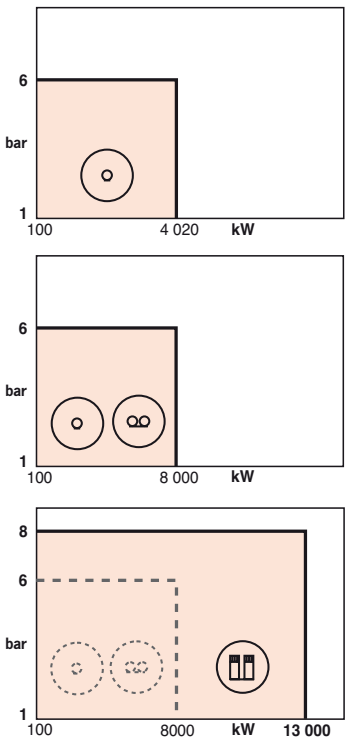

EXPANSON COMFORT

FURNITURES

STANDARD

- Pump shut-off valves,
- Module shut-off valve (EXPANSON COMFORT-H - 1 pump),
- non-return valve,
- regulator with protective filter,
- pressure gauge,
- water level floats and filling,
- filling solenoid valve.

OPTIONAL

- Module shut-off valves (EXPANSON COMFORT-H - 2 pumps or EXPANSON COMFORT-V),
- anti-vibration rubber sleeves,
- back-flanges,
- surge tank,
- surge tank,
- 2nd regulator.

NB

The pressure maintenance units and tanks are delivered in two sections and have different item number.

INSTALLATION FLOW DIAGRAMS

EXPANSON COMFORT-H - 1 pump

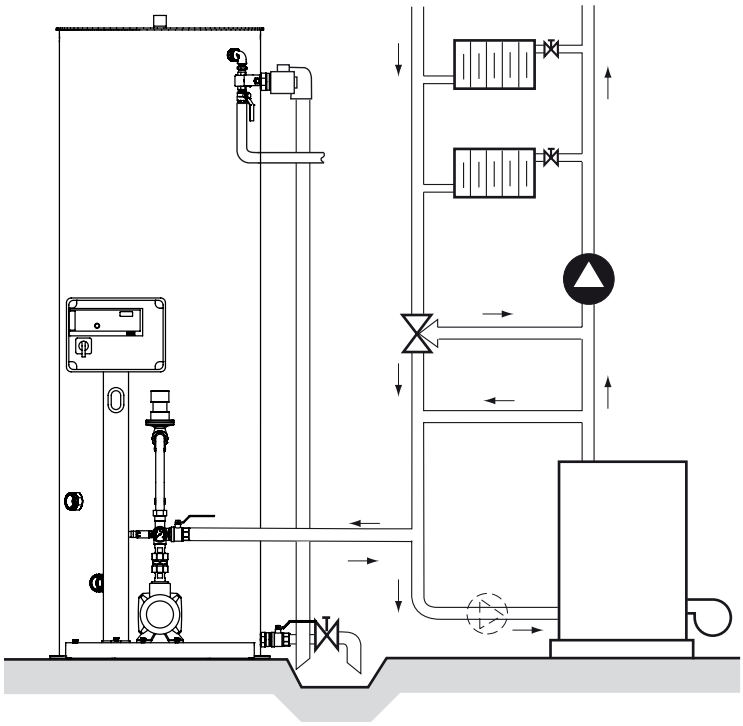

EXPANSON COMFORT-V

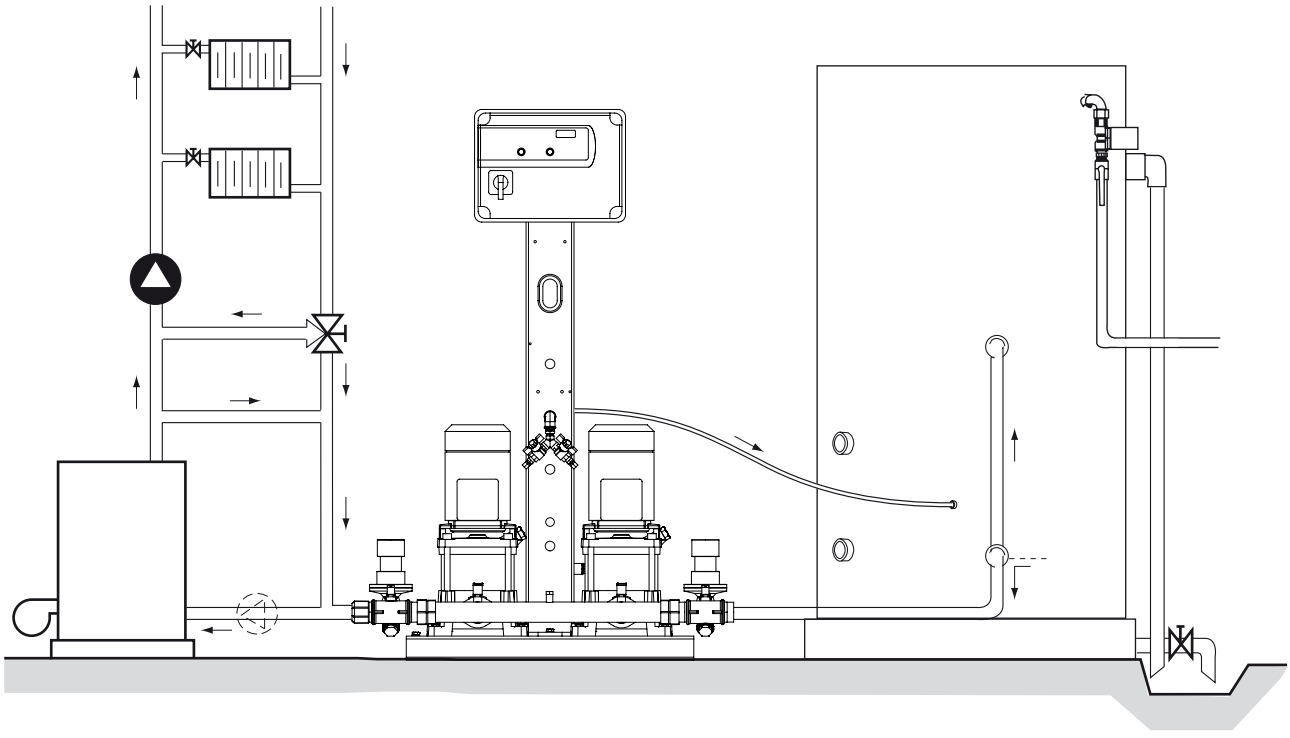

ELECTRONIC BOX: DESCRIPTION AND OPERATION

Box compliant with standards in force. Watertight, IP55 protection.

Functions

- Motor protection by electronic thermal relays.
- Automatic activation and stoppage of pumps according to minimum pressure to be maintained.
- Permutation of the activation order (2 pump version).

Power supply

Three-phase: 230/400 v - (50hz)
Single phase(option) : 230 v - (50hz)

Description: 2 pumps version

Front panel

Rotating power and safety isolation switch, control panel with:

1. Power-on indicator
2. Water shortage indicator
3. 3 x 7 segment display
4. Activation indicator for each pump
5. Fault indicator for each separate pump
6. Rotating switch, 3 positions: Manual - 0 (reset) - Auto
7. Filling activation indicator
8. Rotating switch, 2 positions: Manual- Auto
9. Excess pressure indicator
10. Insufficient pressure indicator

Interior

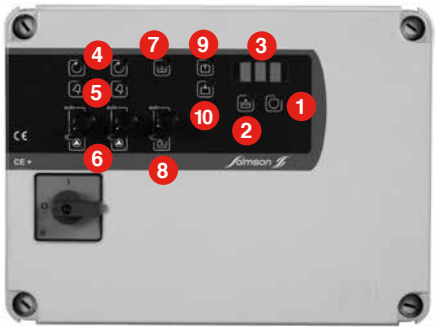

1. General isolation switch with power supply connection points.
2. 230-400V / 24V safety transformer.
3. Magnetic circuit breaker.
4. Contactor (1 per pump) with motor connection points.
5. High-pressure potentiometer.
6. Low-pressure potentiometer.
7. Excess-pressure potentiometer.
8. Insufficient-pressure potentiometer.
9. Thermal protection potentiometer for motors
10. Connection points for external elements (pressure transmitter, water switch, fault reports, remote control).
11. Voltage selector: allows the transformer to be supplied according to the supply voltage (230V or 400V).
12. Primary protective fuses for transformer.
13. Secondary protective fuses for transformer.
14. Pressure transmitter range selection dipswitch.
15. Operating selection dipswitch for insufficient pressure fault.

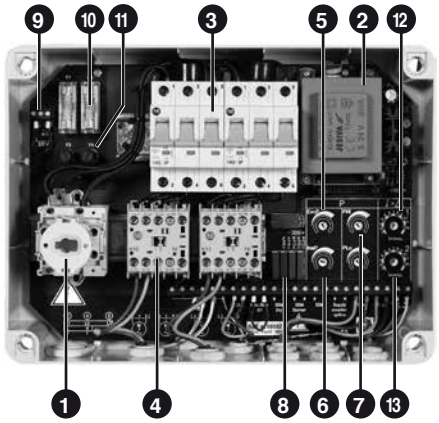

Operation: 2 pumps version

Principle

The automatic operation of the module is guaranteed by 1 electronic pressure

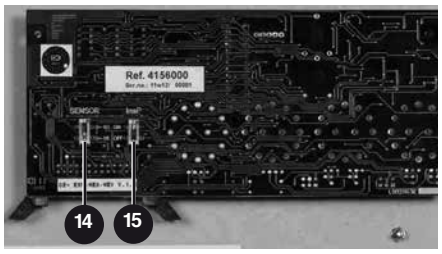

sensor which provides the real pressure value of the system through the intermediary of a 4-20mA current signal. If the discharge pressure of the system is lower than the recommended «low pressure adjustment» pressure, the priority pump is activated.
As soon as the pressure exceeds the recommended «high pressure adjustment» pressure, the pump is deactivated. The second pump serves as a back-up.
The start-up order of the pumps is permutated in each cycle. If a pump fault is detected, the back-up pump is activated immediately. In the event of an operating request in the pump whose switch is set at O (off), the module automatically switches to the second pump.
In manual operations (switch in (temporary) manual position) the 2 pumps may operate at the same time.
If the pressure is too high, the regulator opens and a volume of water returns to the system's tank

Filling

In automatic mode, the solenoid valve opening switch responds to the closure of a contact (float switch) and starts to fill the tank.
The tank may also be filled manually: switch in manual position (locking).

Safety

The activated pump stops in the event of:

a short circuit or overcurrent in the motor,
- insufficient motor power with intensity lower than 0.5Amp,
- excess pressure,
- insufficient water detected by the floater in the tank,
- auxiliary water valve opening too frequently in the tank,
- lack of network phase.

In the case of insufficient pressure, the pump may either,
- Switch in Off position: stop (to avoid risks of flooding in the event of a leak),
- Switch in On position: remain in operation (to avoid vaporisation risks when the leakage risk has been eliminated).

In one of the 3 cases highlighted, the lights must be switched off according to DTU 65-11 (NFP 52-203). A dry opening contact is provided for this purpose.

Fault reports

The different dry contacts for fault reports are:
- The general fault, comprising insufficient water, excess or insufficient pressure, pump fault, pressure sensor fault, phase fault, motor load fault, water consumption fault,
- The separate insufficient water fault,
- The general fault for switching off lights.

Operation: 1 pump version

In the case of an Expanson-Comfort H - 1 pump, the electronic box comprises only one power line.
The automatism board is adapted for operation without a back-up pump.
The lights (opening contact) must still be switched off.

EXPANSON COMFORT

ELECTRICAL AND DIMENSIONAL CHARACTERISTICS OF EXPANSON COMFORT-H

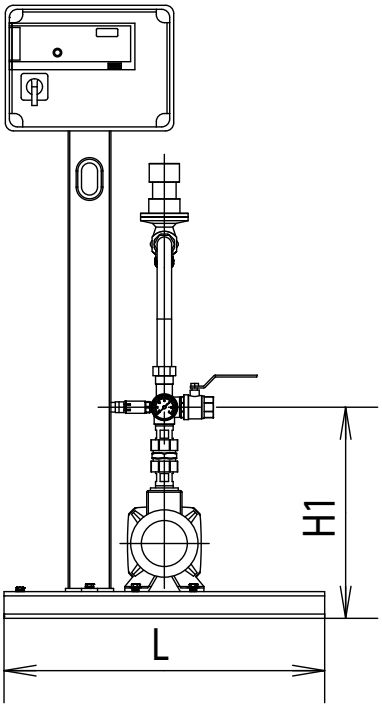

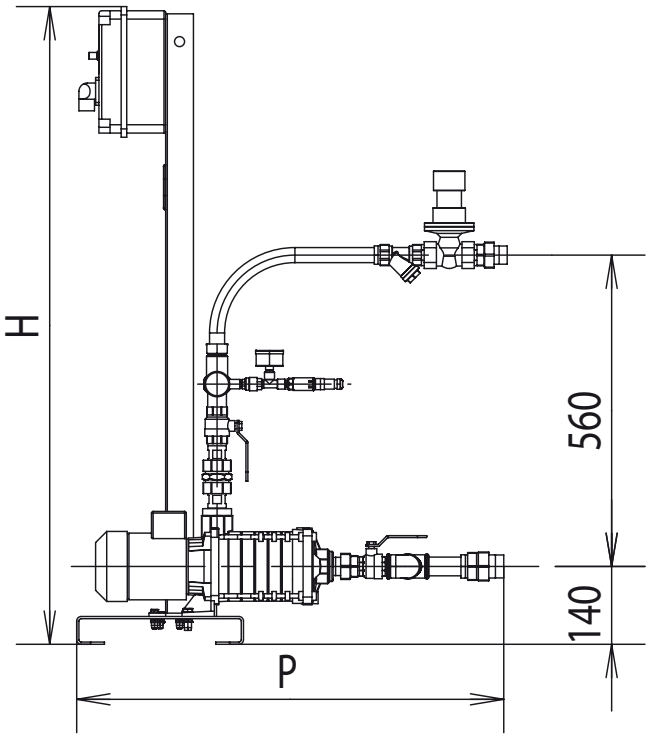

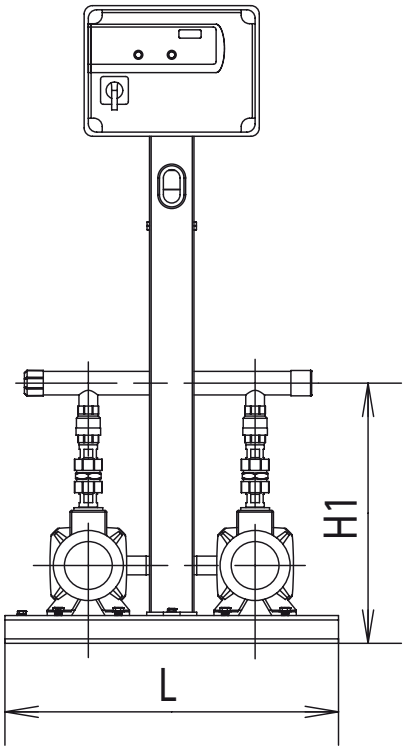

Module reference	Max intensity. 1~ 230V	Max intensity. 3~ 400V	P2	Nber pumps	Nber stages	Nber regulators	Collector	H	L	P	H1	Net mass
	A	A	Kw					mm	mm	mm	mm	Kg
EXPANSON-Comfort-H303-1-CE-M	4	-	0,55	1	3	1	1"	1150	600	678	395	44
EXPANSON-Comfort-H304-1-CE-M	4	-	0,55	1	4	1	1"	1150	600	702	395	45
EXPANSON-Comfort-H305-1-CE-M	5,1	-	0,75	1	5	1	1"	1150	600	676	395	48
EXPANSON-Comfort-H306-1-CE-M	7,2	-	1,1	1	6	1	1"	1150	600	700	395	51
EXPANSON-Comfort-H303-1-CE-T	-	1,7	0,55	1	3	1	1"	1150	600	678	395	44
EXPANSON-Comfort-H304-1-CE-T	-	1,7	0,55	1	4	1	1"	1150	600	702	395	45
EXPANSON-Comfort-H305-1-CE-T	-	2,1	0,75	1	5	1	1"	1150	600	676	395	50
EXPANSON-Comfort-H306-1-CE-T	-	3,1	1,1	1	6	1	1"	1150	600	700	395	50
EXPANSON-Comfort-H303-2-CE-M	8	-	2x0,55	2	3	1	1"1/4	1150	600	748	470	59
EXPANSON-Comfort-H304-2-CE-M	8	-	2x0,55	2	4	1	1"1/4	1150	600	772	470	61
EXPANSON-Comfort-H305-2-CE-M	10,2	-	2x0,75	2	5	1	1"1/4	1150	600	746	470	69
EXPANSON-Comfort-H306-2-CE-M	14,4	-	2x1,1	2	6	1	1"1/4	1150	600	770	470	75
EXPANSON-Comfort-H303-2-CE-T	-	3,4	2x0,55	2	3	1	1"1/4	1150	600	748	470	59
EXPANSON-Comfort-H304-2-CE-T	-	3,4	2x0,55	2	4	1	1"1/4	1150	600	772	470	61
EXPANSON-Comfort-H305-2-CE-T	-	4,2	2x0,75	2	5	1	1"1/4	1150	600	746	470	72
EXPANSON-Comfort-H306-2-CE-T	-	6,2	2x1,1	2	6	1	1"1/4	1150	600	770	470	72
EXPANSON-Comfort-H303-2-CE-T-2D	-	3,4	2x0,55	2	3	2	1"1/4	1150	600	748	470	62
EXPANSON-Comfort-H304-2-CE-T-2D	-	3,4	2x0,55	2	4	2	1"1/4	1150	600	772	470	64
EXPANSON-Comfort-H305-2-CE-T-2D	-	4,2	2x0,75	2	5	2	1"1/4	1150	600	746	470	75
EXPANSON-Comfort-H306-2-CE-T-2D	-	6,2	2x1,1	2	6	2	1"1/4	1150	600	770	470	75

ELECTRICAL AND DIMENSIONAL CHARACTERISTICS OF EXPANSON COMFORT-V

Storage tanks

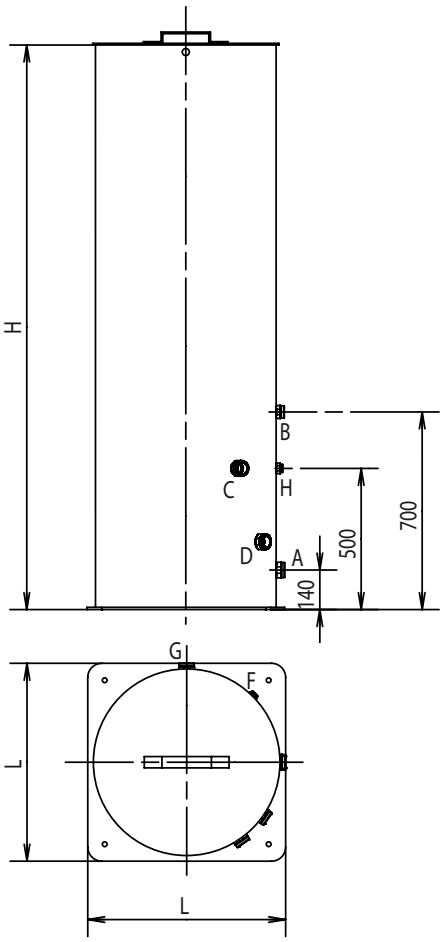

A = Suction opening	1"1/2 G
B = Regulator connection	1"1/2 G
C = Filling float	1"1/4 G
D = Water level float	1"1/4 G
F = Solenoid valve connection	1/2" G
G = Emptying opening	1" G
H = Degassing opening	1/4"G

Cap.	Useful volume	H	L	Net mass
litres	litres	mm	mm	Kg
200	170	1550	495	21
400	355	2000	620	36
600	485	2000	700	35
800	665	2000	800	39
1000	800	2000	890	60
1500	1240	2000	1110	100
2000	1790	2000	1290	110
2500	2030	2000	1390	120
3000	2580	2000	1540	165
3500	2860	2000	1630	180
4000	3340	2000	1740	200
5000	4220	2000	1950	285

•Connection by 1"1/4 threated collectors either left or right

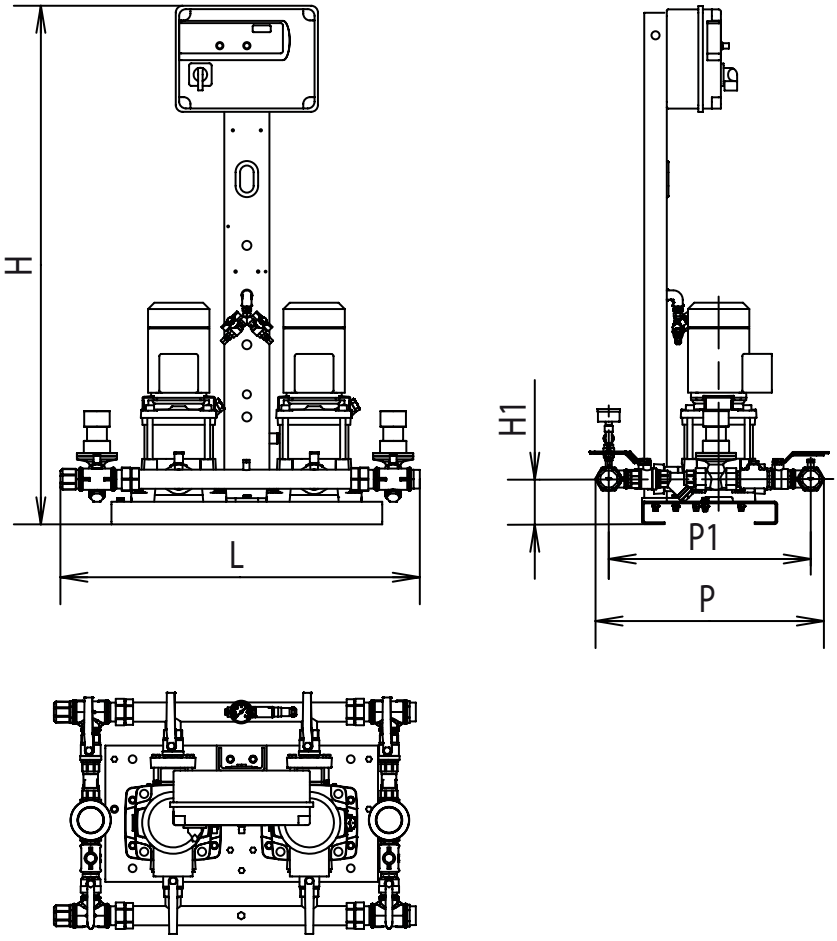

Module reference	Max intensity 3~400V		P2	Nber pumps	Nber stages	Nber regulators	Collector	H	L	P	H1	P1	Net mass
	A		Kw					mm	mm	mm	mm	mm	Kg
EXPANSON-Comfort-V303-2-CE-T	2x3,6		2x0,55	2	3	1	1"1/4	1150	685	510	100	450	84
EXPANSON-Comfort-V304-2-CE-T	2x3,6		2x0,75	2	4	1	1"1/4	1150	685	510	100	450	91
EXPANSON-Comfort-V305-2-CE-T	2x3,6		2x0,75	2	5	1	1"1/4	1150	685	510	100	450	92
EXPANSON-Comfort-V306-2-CE-T	2x4,8		2x1,1	2	6	1	1"1/4	1150	685	510	100	450	89
EXPANSON-Comfort-V307-2-CE-T	2x4,8		2x1,1	2	7	1	1"1/4	1150	685	510	100	450	93
EXPANSON-Comfort-V308-2-CE-T	2x6,6		2x1,5	2	8	1	1"1/4	1150	685	510	100	450	100
EXPANSON-Comfort-V303-2-CE-T-2D	2x3,6		2x0,55	2	3	2	1"1/4	1150	800	510	100	450	88
EXPANSON-Comfort-V304-2-CE-T-2D	2x3,6		2x0,75	2	4	2	1"1/4	1150	800	510	100	450	95
EXPANSON-Comfort-V305-2-CE-T-2D	2x3,6		2x0,75	2	5	2	1"1/4	1150	800	510	100	450	96
EXPANSON-Comfort-V306-2-CE-T-2D	2x4,8		2x1,1	2	6	2	1"1/4	1150	800	510	100	450	93
EXPANSON-Comfort-V307-2-CE-T-2D	2x4,8		2x1,1	2	7	2	1"1/4	1150	800	510	100	450	97
EXPANSON-Comfort-V308-2-CE-T-2D	2x6,6		2x1,5	2	8	2	1"1/4	1150	800	510	100	450	104

EXPANSON COMFORT

TECHNICAL SPECIFICATIONS OF MODULE COMPONENTS

Pump(s)
- Centrifugal, multicellular, vertical (EXPANSON Comfort V) or horizontal (EXPANSON Comfort H). stainless steel hydraulic,
-Watertight thanks to mechanical seal
- Three-phase motors 230/400 v - 50 hz - IE2.
- Single-phase (optional in version V).
- Insulation category 155° (F).
- Protection index minimum IP 54.

Electrical box
See descriptions on previous pages.

Regulator
- Stainless steel valve seat and spring.
- Brass housing and valve.
- ø 1" tapered openings.
- E.P.D.M. adjustment membrane.
- kvs coefficient: 5.

For the EXPANSON Comfort V model, the regulator assembly group is fitted with a leak control plug to optimise the adjustment of the opening pressure.

Protective regulator filter
- Brass housing.
- ø 1" tapered openings".
- Stainless steel screen which can be quickly removed for cleaning.

Pressure transmitter to control the pumps and detect safety thresholds
- 0-10 or 0-16 bar model.
- 4/20mA, /10V signal.
- 316L stainless steel housing.
- With M12 cabling connector.

NB

In the event of an insufficient pressure fault, a switch inside the box offers a choice between two solutions:
Off) pump stopped to avoid flooding risks in the event of leaks in the system.
On) pump maintained in operation to avoid vaporisation risks in the system if the leakage risk is eliminated by impulse meter for example,

Suction / discharge collectors
(2 pump modules)
In 304 stainless steel, threaded Diam 1"1/4 (33-42).

Storage tanks
Vertical, in PPH (homopolymer polypropylene), fitted with:

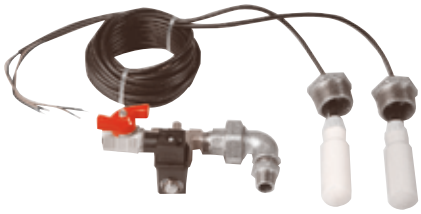

•Level regulators (filling and insufficient water) and filling solenoid valve for storage tank.

- 2 level regulators (filling and insufficient water), pre-wired to the box, to be assembled on the tank openings.
- 1 filling solenoid valve pre-wired to the box, to be assembled on the tank.
- 1 overflow opening and 1 emptying opening located on the same level for ease of connection to the drain.
- 1 connection opening for permanent degassing of mechanical seals (version V) with adjustment valve to avoid risks in the event of long-term pump stoppages.
- Lifting holes or eyes in upper section from 1,000 l for ease of transport.

NB

The tanks are filled under the water line to avoid backwash and oxygenation of the water whilst observing the disconnection from the mains water.

- Single-phase EXPANSON Comfort H: 200 to 1,500 litre tanks to be connected directly to the module.
- Three-phase EXPANSON Comfort H: 200 to 3000 litre tanks to be connected directly to the module.
- EXPANSON Comfort V 2 pumps: 200 to 3000 litre tanks separate from the module.

PARTICULARITIES

a) Electricity
- Three-phase 230/400V - 50Hz without neutral or single-phase 230V 50Hz to be specified with the order.
- All the control units are connected in the factory.
- To be completed: connection to electrical network, fault reports (if necessary) and switching off of lights (according to Dtu 65-11).

b) Assembly
- On a stable, horizontal floor.
- Hydraulic connections to be made:
  - Mains water supply.
  - Tank overflow and emptying.
  - Module on system return.
  - Module and pump degassing on tank (EXPANSON COMFORT-v).
  - Level floats on tank (Version V).

c) Packaging
- Module delivered on pallet under cover.
- Separate tank.

d) Maintenance
- Replacement or repair of defective elements in the module.
- Spare parts recommended for pump(s).

OPTIONS

- Module shut-off valves,
- Anti-vibration sleeves with Ø of collectors,
- Back-flanges with Ø of collectors,
- Surge tank,
- Impulse water meter.
- 2nd regulator, connection on right or left of module (EXPANSON COMFORT-v).

STANDARDS

Compliance with standards:
- Dtu 65-11 (NFP 52-203), which requires the lights to be switched off in case of:
- Insufficient water,
- Insufficient pressure,
- Excess pressure.
- Nfc 15-100, in low voltage electrical systems.
- En 60-204, on machine safety.
- CEM en 61000-6-1 and 6-2.
- CEM en 61000-6-3 and 6-4.
- CE declaration: "machines" directive.

RANGE OF APPLICATION

Vol. of the installation to be treated:	**0,5 to 40 m³**
Maximum working pressure:	**10 bar**
Temperature range:	**0 to +100°C**
DN of closed system :	**15 to 250**

KIDSON

SLUDGE-REMOVAL SETS
For heating systems
50 Hz

ADVANTAGES

- **Removes natural sludge, NON-POLLUTING, HARMLESS TO THE ENVIRONMENT.**
- **Saves energy: a clean system means no more blocked pipes and no hot-spots.**
- **The water characteristics are maintained and the flow of the installation is extended.**
- **Separator in 316 stainless steel.**
- **Valve to automatically balance the flow.**
- **Wet running circulating pumps.**
- **Module preset in factory.**
- **Easy to fit and maintain.**

APPLICATIONS

The essential function of the Kidson is to protect the heating system against silting by continuously removing material in suspension..

The Kidson is particularly recommended for:
- residential flats,
- service industries.

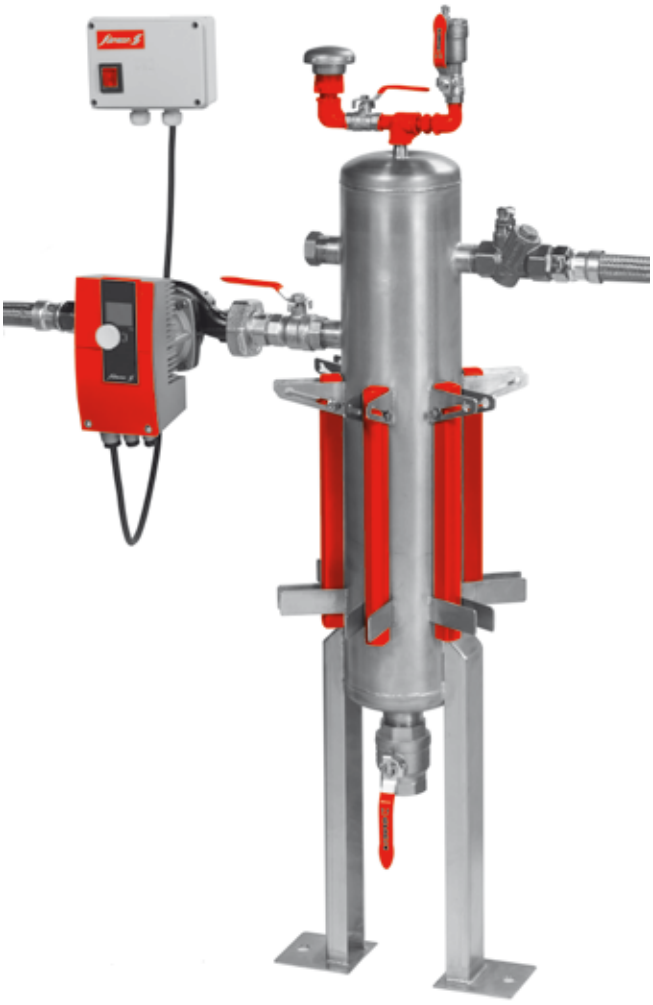

KIDSON

DESIGN

The Kidson is a complete module delivered in kit form, easy to assemble, including:

- **A separator:** a static pièce in stainless steel, fitted with magnetic bars on guide supports.

- **A hydraulic and electro mechanical section fitted with:** a wet running circulating pump specific to each model, of a drain cock, a dynamic balancing valve and a vent valve, de-aerator, a stand or a support bracket, depending on the model, and connecting hoses.

- **A control box.**

IDENTIFICATION

KIDSON 0,5

Pump code

size of the module
(0,5 ; 1 ; 2 ; 3 ; 4 ; 5)

TECHNICAL SPECIFICATIONS

CONTROL BOX

- Power supply single phase 230V.
- An on-off switch.

CIRCULATING PUMP

- Wet running, Priux home or Siriux master type.
- Single phase 230V power supply.
- Insulation class 155 (F).

BALANCING VALVE

- Flow adjustment cartridge.
- Direct selection without adjusting the optimum flow.
- Ensures dynamic balance.

DESCRIPTION OF THE MODULE

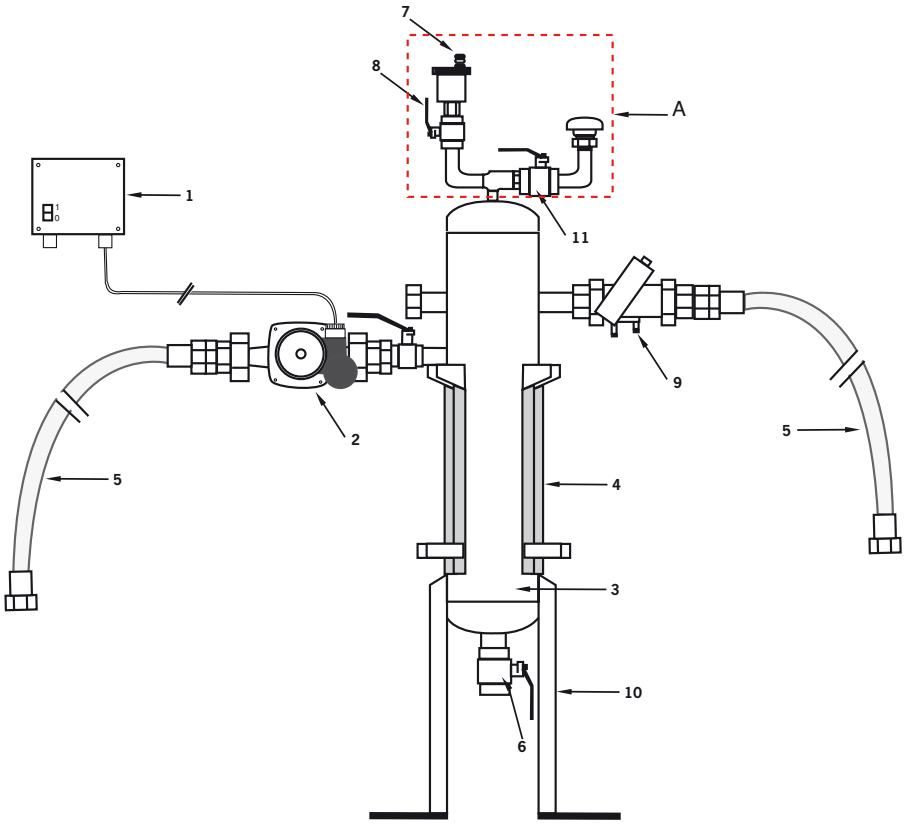

KEY

1 - control box (wall-mounted).
2 - Circulating pump specific to each Kidson model.
3 - Separator with sludge retention chamber.
4 - Polar magnetic elements.
5 - Woven hoses in and out of the separator.
6 - Drain valve.
7 - Automatic de-aerator.
8 - Shut-off valve.
9 - Balancing valve.
10 - *Stand.
11 - Vent valve.
a - Unit delivered pre-assembled.
*Stand for Kidson models 3, 4 and 5
Bracket for Kidson models 0.5, 1 and 2

OPERATING PRINCIPLE

• Kidson 3, 4 and 5

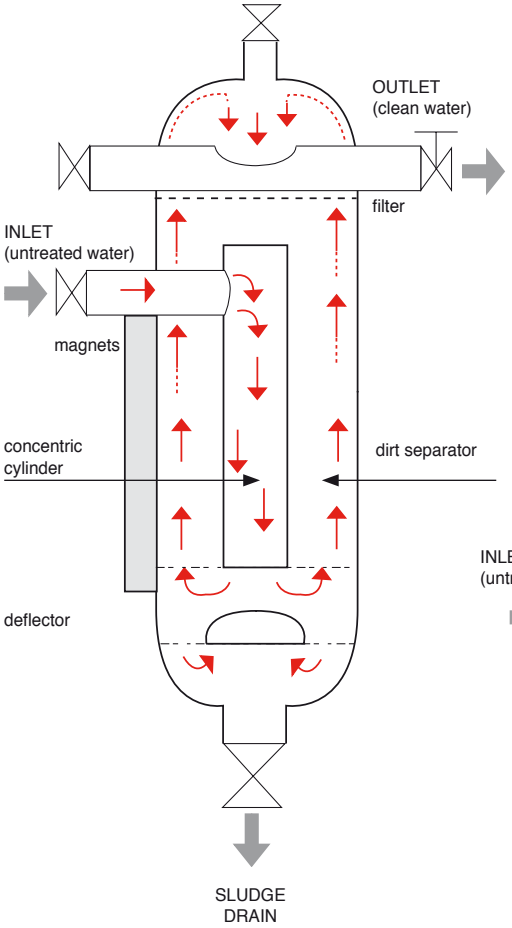

• Kidson 0,5, 1 and 2

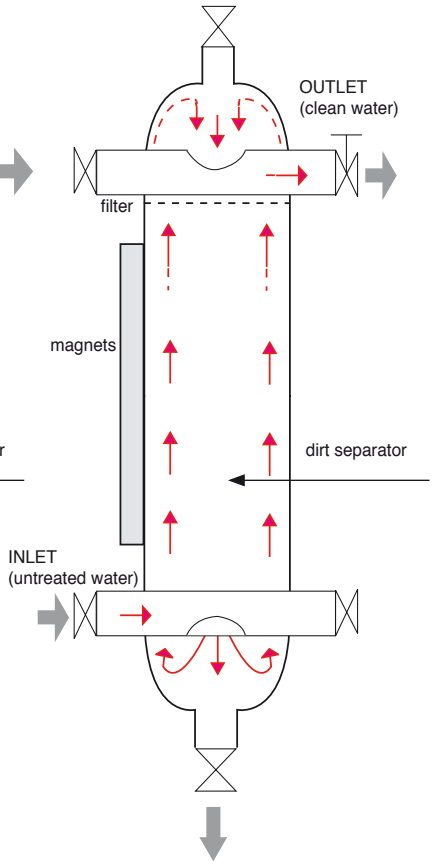

The Kidson effectively removes sludge from heating systems by means of natural physical phenomena.
The operating principle is based on physical separation through the combined actions of:

Gravitation
+ filtration
+ the magnetic effect
+ the "pressure-breaker" effect of the separator.

Water is introduced from the system into the separator by the lower junction. The constant pressure from the circulating pump makes the water move slowly up and down in the separator.
The particles in suspension fall by their own weight under gravity to the bottom of the dirt separator.
A millimetric filter captures floating bodies such as tow or polystyrene.
Under the action of the polar magnetic field, ferromagnetic particles condense on the inner walls of the separator.
The separator has a "pressure-breaker" role in the flow of the fluid and encourages venting through the automatic air bleed.
The system is purged manually: stop the circulating pump, open and close the valves a quarter-turn and move the magnetic bars (breaking the magnetic field).
When draining the system, the corps interior of the dirt separator is automatically cleaned by the counter-current.

CHOOSING A MODULE

		Nominal diameter of return pipe												
Max. vol. of installation	**No. of homes**	**15**	**20**	**25**	**32**	**40**	**50**	**65**	**80**	**100**	**125**	**150**	**200**	**250**
0,5≤Vmax.≤1m³	≤10	Kidson 0,5	Kidson 0,5	Kidson 0,5	Kidson 1									
01≤Vmax.≤3m³	≤40		Kidson 1	Kidson 1	Kidson 1	Kidson 1	Kidson 1	Kidson 2						
03≤Vmax.≤10m³	≤120		Kidson 2	Kidson 2	Kidson 2	Kidson 2	Kidson 2	Kidson 2	Kidson 3					
10≤Vmax.≤15m³	≤170			Kidson 3	Kidson 3	Kidson 3	Kidson 3	Kidson 3	Kidson 3	Kidson 4	Kidson 4			
15≤Vmax.≤20m³	≤220				Kidson 4	Kidson 4	Kidson 4	Kidson 4	Kidson 4	Kidson 4	Kidson 4	Kidson 5	Kidson 5	
20≤Vmax.≤40m³	≤300				Kidson 5	Kidson 5	Kidson 5	Kidson 5	Kidson 5	Kidson 5	Kidson 5	Kidson 5	Kidson 5	Kidson 5

KIDSON

DIMENSIONS FEATURES

Kidson 0,5, 1 et 2

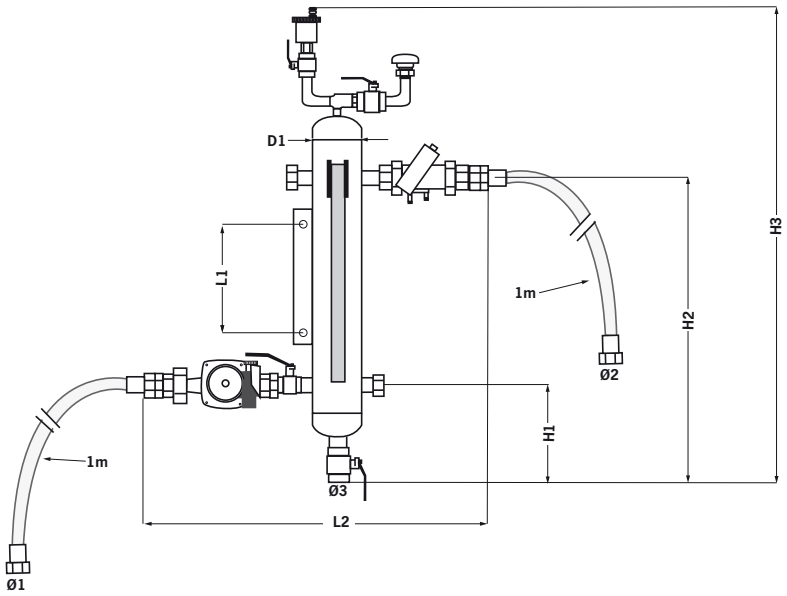

Kidson 3, 4 et 5

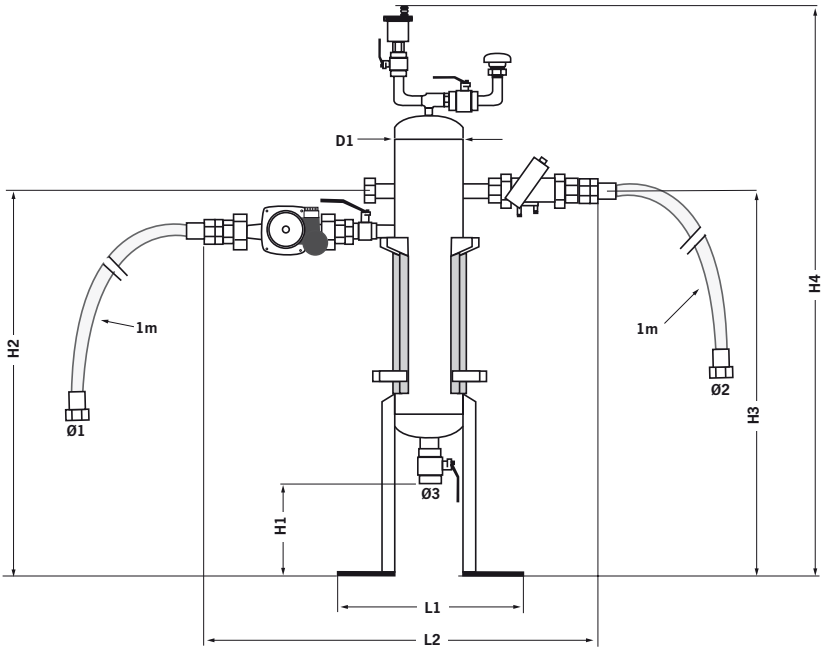

FEATURES

a) Electrical

- Power supply: single phase 230 V - 50 Hz. Connection made in factory:
- from motor to circulating pump.

To be made on site:

- from single phase power supply to the terminals of the control box mains switch.
- from control box to circulating pump.

b) Fitting

to a branch connection on the return pipe of the system.

Can be wall- or floor-mounted, using anchor bolts (not provided).

Connect using threaded couplings.

Three hydraulic connections:

- module inlet,
- module outlet,
- sludge drain (arranged so that when opened the contents drain at atmospheric pressure).

NOTE

Draining the sludge requires a fresh water supply to the installation.

c) Packaging

Module delivered in kit in cardboard box, with assembly instructions.

d) Maintenance

Manual purges (method described in the maintenance instructions).

MANDATORY ACCESSORIES

Il is essential to install shut-off valves upstream and downstream of the product.

ORDER REFERENCE	H1	H2	H3	H4	L1	L2	D1	Ø1 threaded	Ø2 threaded	Ø3 threaded	magnets number	Mass	Capacity	Flow	Type of circulating pump
	mm	mm	mm	mm	mm	mm	mm	Enter	Exit	Purge		kg	litres	l/h	
Kidson 0.5*	140	440	710	-	150	440	48.3	1/2”	1/2”	3/4”	1	7.2	0.63	100	Priux home 40-25/130 mm
Kidson 1*	140	440	710	-	150	490	70	3/4”	3/4”	3/4”	2	10.6	1.85	300	Priux home 60-32/180 mm
Kidson 2*	140	440	710	-	150	490	88.9	3/4”	3/4”	3/4”	4	12.6	2.55	1000	Siriux master 32-65 PN6/10
Kidson 3	220	790	890	1175	265	880	139.7	1”	1”	1”½	6	22	9.1	1500	Siriux master 32-65 PN6/10
Kidson 4	220	1125	1275	1585	280	910	159	1”¼	1”¼	1”½	12	32.7	19.57	2000	Siriux master 32-65 PN6/10
Kidson 5	220	1125	1335	1680	280	910	168.3	1”¼	1”¼	1”½	12	37.8	25	4000	Siriux master 32-65 PN6/10

*These models are wall-mounted.

Each of the six models in the range has a different operating flow. This is predefined by the adjustment valve. They cannot be adjusted manually.

RANGE OF USE

Vol. of the installation to be treated:	**10 à 900 m³**
Max. operating pressure :	**10 bar**
Temperature range :	**–8° to +100°C**
Nominal diameter of systems :	**40 to 600**

CLEANSON

DE-SLUDGING MODULES
For heating systems
50 Hz

ADVANTAGES

- **98% optimum efficiency: all particles up to 40 microns are removed.**
- **Maintains the characteristics of the water over time without added chemicals.**
- **Removes natural sludge, no pollutants, no risk to the environment.**
- **Energy-saving: clean systems, no more blocked pipes, no more localised overheating.**
- **Separator in stainless steel 316L.**
- **Automatic and permanent bleeding of air.**
- **Separator can be dismantled, meets D.T.U. no. 60-1 standards.**
- **Operation totally supervised and automated.**

APPLICATIONS

The Cleanson has the essential task of protecting central heating systems from sludge by continuously removing material in suspension while ensuring that the system is permanently bled.

The Cleanson is particularly recommended for :
- blocks of flats,
- the service sector,
- industry.

• Cleanson 12 to 40



• Motorised butterfly drain valve



• Leak detector





• Monobloc in-line pump LRL (mod. 12 to 40)

CLEANSON

DESIGN

The Cleanson is a complete module comprising:

- A separator: a static piece, fitted with several magnetic elements around a particle separation cylinder and of a sludge collection chamber.
- A hydraulic and electromechanical assembly with: a specific pump for each model, a motorised automatic sludge drain valve, a motorised safety valve (in case of power cut or leakage) and a leak detector.
- A control and protection box maintains completely automated operation.

The Cleanson is delivered pre-wired, painted and ready to install.

DESCRIPTION OF THE MODULE (MODELS 12 TO 40)

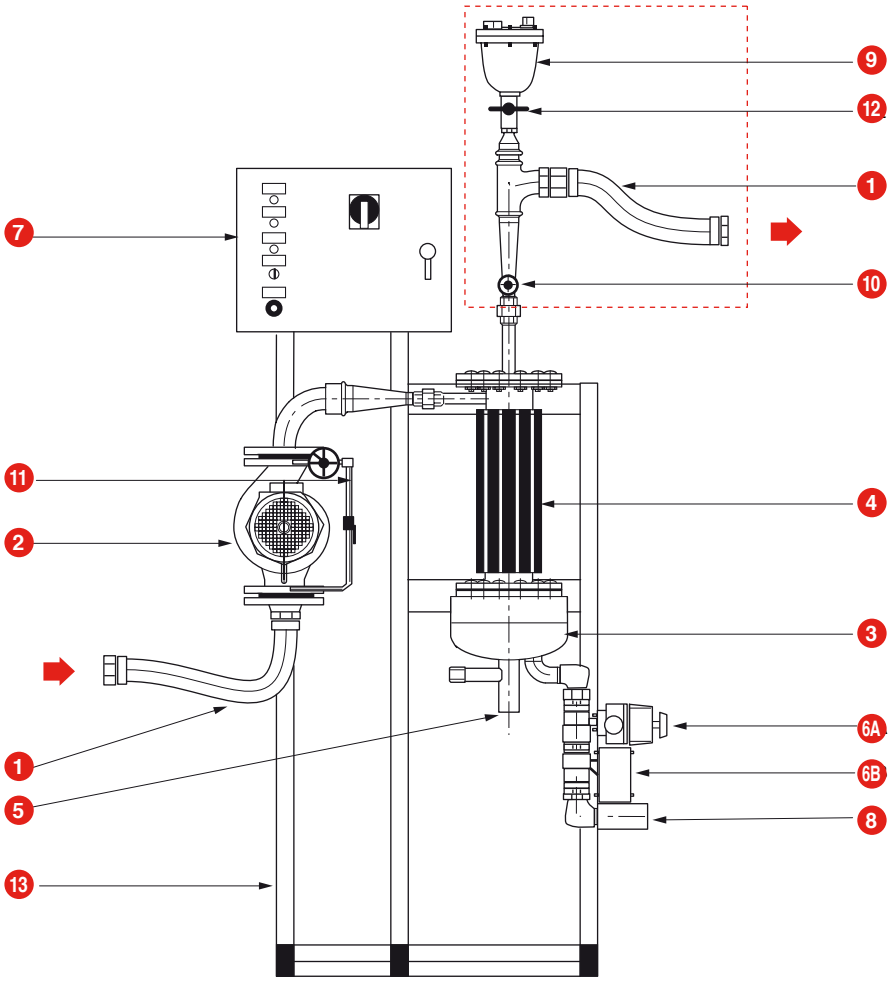

KEY

1 - Braided flexible hoses at the intake and output of the module.
2 - Specific pump.
3 - Separator with centrifuge and sludge retention chamber.
4 - Polar magnets.
5 - Deflector rod to adjust the fineness of filtration.
6A - Motorised butterfly drain valve.
6B - Motorised butterfly safety valve.
7 - Control and automatic system box.
8 - Leak detector.
9 - Automatic ventilation.
10 - Flow rate adjustment valve.
11 - Pressure tapping kit (Kit Press 10 bar).
12 - Ventilation shut-off valve.
13 - Support frame.

SPECIFICATIONS

Electrical box 7

- Watertight - Protection IP 559.
- 3~ supply 230V or TRI 400V-50 Hz.
- Lockable fastening (7 on figure below).
- Pump motor protected by factory-adjusted magneto-thermal circuit-breaker.
- Thermal protection on opening (PTO) on the Cleanson 12 to 40.

Operating cycles of pumping and draining programmed by clock switch and adjustable delays :

- Pump switches off when draining.
- Controlled motorised valves.
- Automatic supervised sludge draining.

Three indicator lamps on front panel display the operation of the Cleanson :

1 - Power on
2 - General fault (pump - drainage - leak)
3 - General operation

To these indicators are added :

4 - A two position switch to choose the operation: off/automatic
5 - A reset button
6 - A general safety switch to stop the pump immediately if there is a malfunction
7 - Lockable fastening

The Cleanson box maintains completely automated operation of the module.

Pump 2

- Type LRL or PBS depending on the model of Cleanson.
- Waterproofed by mechanical seal.
- Three-phase motor.
- Insulation class 155 (F).
- Protection IP54.

Motorised drain valve 6A

Reversible-action butterfly valve, without return spring.

- Supply 24 V.
- Consumption 6 W on opening.
- Protection Class III - IP65.
- Opening 10 seconds.
- Closing 10 seconds.
- Ambient temperature – 20° to + 55°C.

Motorised safety valve 6B

Butterfly valve with return spring.

- Supply 24 V.
- Consumption 6 W on opening.
- Protection Class III - IP42.
- Opening 150 seconds.
- Closing 16 seconds.
- Ambient temperature – 30° to + 50°C.

Adjustment valve 10

A gate valve, to select the optimum flow rate depending on information read on the manometer.

- Maximum temperature + 100 °C.
- PN 10.

SEPARATOR

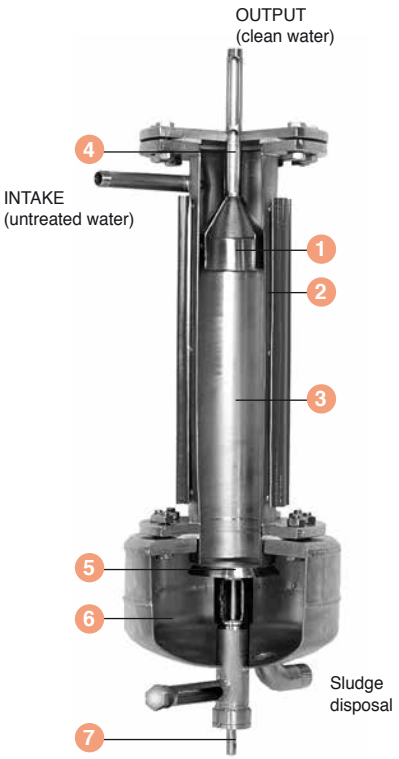

1 Exhaust cone.
2 Polar magnets.
3 Chamber of separation.
4 Tangential intake.
5 Adjustable deflector.
6 Sludge retention chamber.
7 Rod to adjust of the fineness of filtration* and the Vortex effect.

* Fineness of filtration is factory-set to 40 microns, it may be reset on site.

CONTROL BOX



VALVES



CLEANSON

OPERATING PRINCIPLE

The Cleanson demonstrates an unprecedented new kind of technology.
It uses natural physical phenomena without adding any chemicals [1].
This patented innovation consists of physical separation and ventilation through the combined actions of:

Centrifuging
+ Magnetic filtration
+ The vortex effect.

Magnetic filtration is a way of flocculating iron oxides and separating them from water, using magnetism.
The water drawn into the module from the system is accelerated by the pump; it enters the separator through the tangential intake.
The constant thrust of the pump and the exhaust cone force the water into a very high speed centrifugal motion.
Under the action of the powerful centrifugal field thus generated and the multipolar magnetic field, the particles in suspension in the water slide along the walls of the separator.
They are then sucked into the retention chamber below.
The presence of the deflector reverses the direction of movement of the water, which creates a vortex effect.
The water rises back up centre of the separator to be returned to the system.
Automatic, permanent ventilation takes place at the output from the separator.
The iron oxides transform into magnetite or black sludge which is drawn off through the motorised drain valve.
The operation is totally automatic and its progress is displayed on the control box.

CHOICE OF THE MODULE

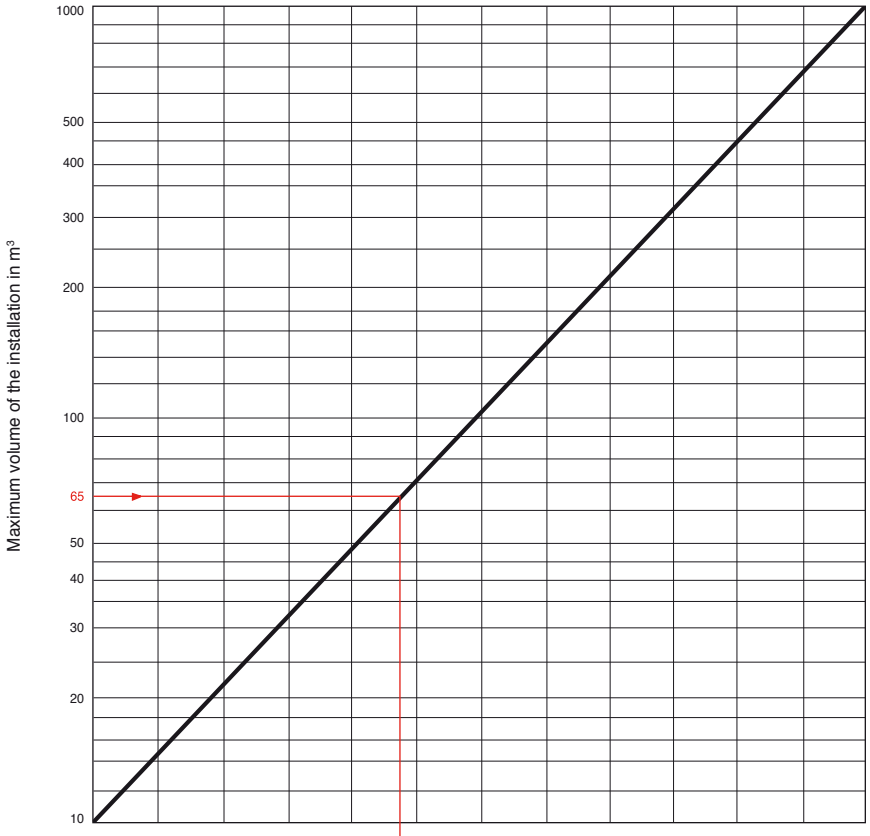

Cleanson model

Return pipework												
40	12	15	20							Consult us		
50	12	15	20	25								
65	12	15	20	25	30							
80	15	20	20	25	30	40						
100	20	20	25	25	30	40						
125	20	25	25	30	30	40	50					
150	25	25	30	30	40	40	50	65				
200		30	30	40	40	50	50	65	80			
250			40	40	50	50	65	65	80	100		
300				40	50	50	65	65	80	100	125	
350					50	65	65	80	80	100	125	125
400						65	80	80	80	100	125	125
450						65	80	80	80	100	125	125
500							80	80	100	125	125	125
600		Consult us					80	80	100	125	125	125

1) If it proves necessary in some cases of rehabilitation, to progressively put incrusted sludge into a suspension, only a water treatment professional should carry out this once and for all operation

GENERAL INSTALLATION DIAGRAM

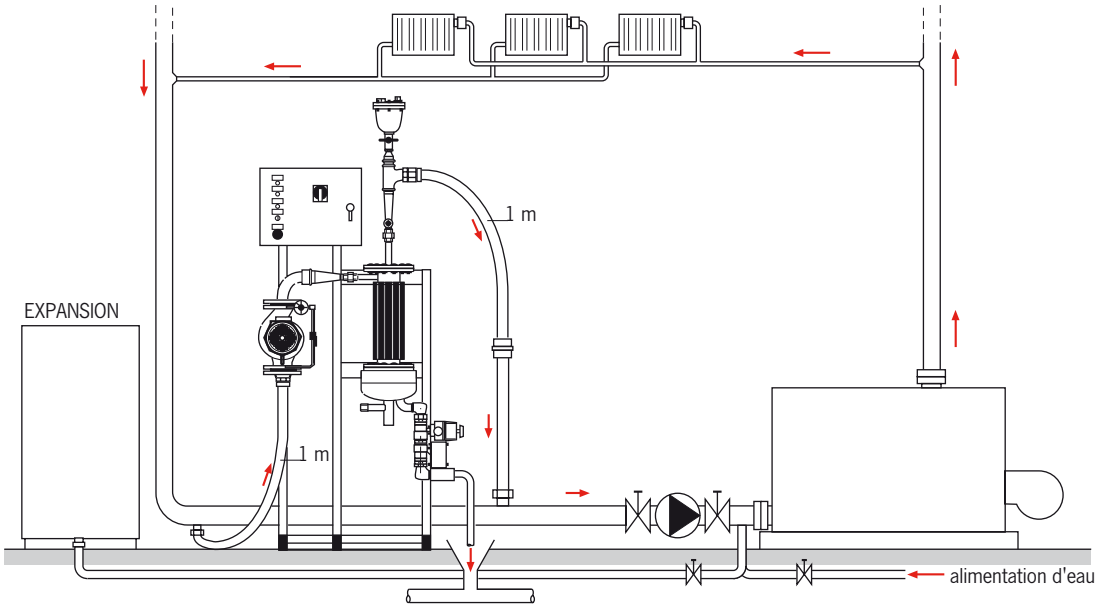

SIZES - CLEANSON 12 TO 40

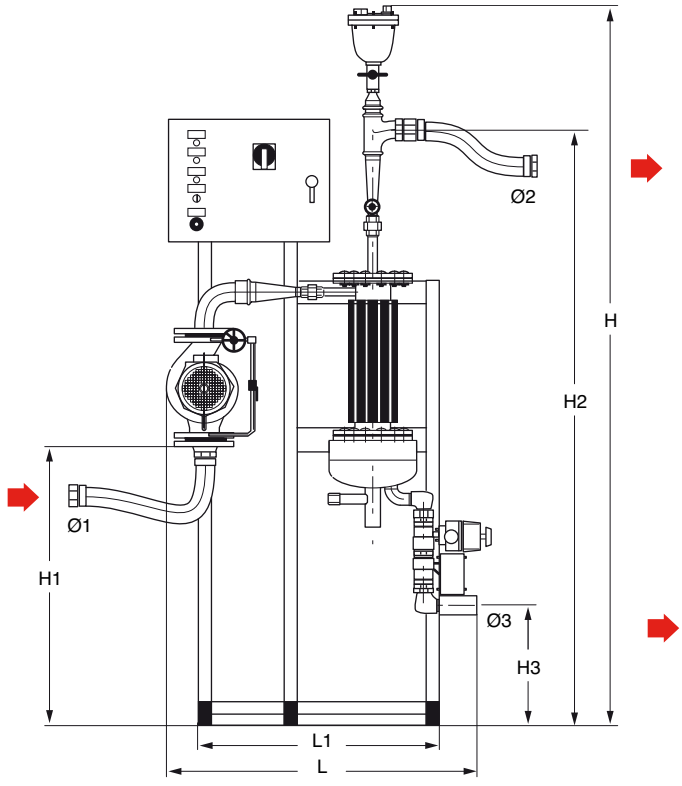

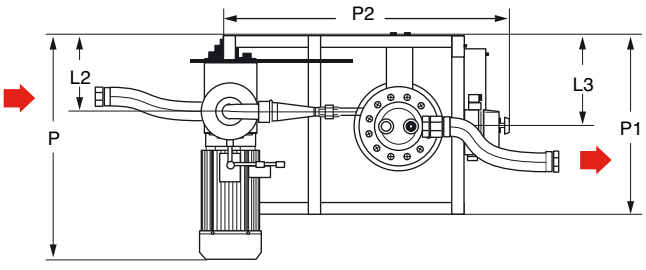

CLEANSON

DIMENSIONS

CLEANSON 50

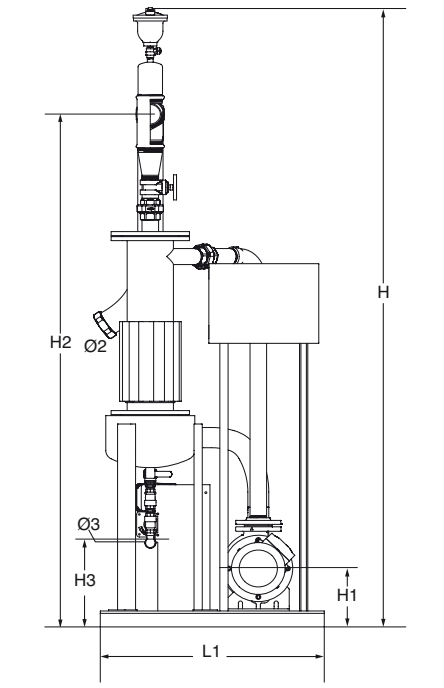

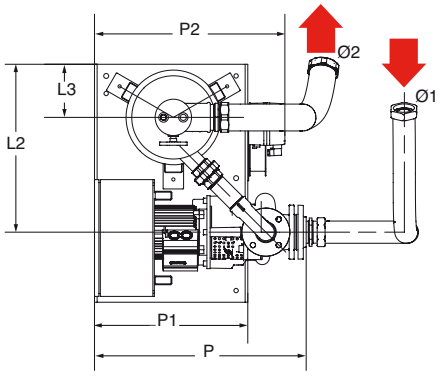

CLEANSON 65

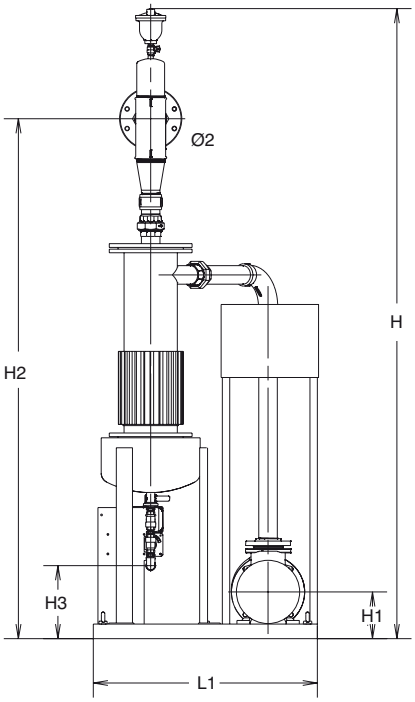

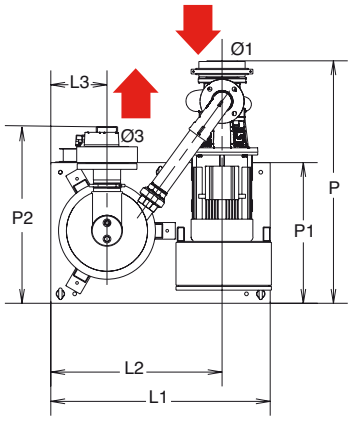

FEATURES

a) Electrical

- Modules TRI 230 V or 400 V - 50 Hz.

Connections made in the factory :

- pump motor,
- motorised valves,
- leak detector.

To be made:

- three-phase supply to the terminals on the mains switch in the box.

Protection by differential circuit-breaker is essential (range C or D) up-current of the box.

b) Fitting

On a branch connection from the return pipe to the boiler or air conditioning.

Three hydraulic connections:

- entry to the module,
- exit from the module,
- sludge drain (drain by disconnecting the outlet at atmospheric pressure).

NOTE

Automatic sludge removal requires a top-up water supply to the installation.

c) Packaging

Module delivered on pallet, shrink-wrapped.

d) Maintenance

Any part found to be defective will be exchanged or repaired.

Recommended spare parts for the pump.

OPTIONS

Adjustment and assistance in commissioning the module by Salmson.

ORDER REFERENCE COMMANDE	H	L	P	H1	H2	H3	L1	L2	L3	P1	P2	Ø 1 threaded	Ø 2 threaded	Ø 3 threaded	mass	Type of pump
	mm	mm	mm	mm	mm	mm	mm	mm	mm	mm	mm	entrée	sortie	purge	kg	
CLEANSON 12 C-N	1770	800	531	670	1520	290	600	190	225	450	700	1"1/4	1"1/4	3/4"	125	LRL203-11/0.75
CLEANSON 15 C-N	1770	800	531	670	1520	290	600	190	225	450	700	1"1/4	1"1/4	3/4"	135	LRL203-11/0.75
CLEANSON 20 C-N	1770	800	531	670	1470	290	600	190	225	450	700	1"1/4	1"1/4	3/4"	150	LRL203-11/0.75
CLEANSON 25 C-N	2070	880	546	720	1700	290	725	200	240	415	750	2"	2"	3/4"	185	LRL205-11/0.75
CLEANSON 30 C-N	2370	1100	586	770	1970	290	950	200	250	510	970	2"1/2	2"1/2	3/4"	220	LRL206-12/1.5
CLEANSON 40 C-N	2270	1100	608	770	1970	290	950	220	250	510	970	3"	3"	3/4"	265	LRL208-12/2.2
CLEANSON 50 C-N	2350	-	858	225	1930	290	815	575	180	645	600	2"1/2	3"	3/4"	290	PBS50-140-3
CLEANSON 65 C-N	2740	-	1020	192	2135	290	920	717	235	590	650	3"	5"	3/4"	350	PBS65-140-5.5
CLEANSON 80 C-N	Consult us for the sizes of these 3 models															
CLEANSON 100 C-N																
CLEANSON 125 C-N																

OPERATING LIMITS

Tank volume :	**1,2 L**
Temperature range :	**50° C max.**
PH :	**> 2,4**
ND of inlet orifice :	**Ø 19 or 30 mm**
ND of discharge orifice :	**Ø 10 mm**

CONDENSON CLASSIC

CONDENSATE LIFTING UNIT
Clear condensation water
50 Hz

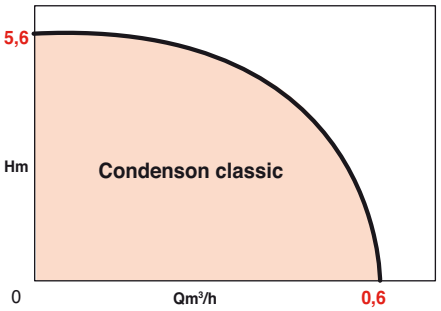

APPLICATIONS

- Refrigerated display cabinets
- Ice makers
- Refrigerated drink vending machines
- Wine cellars
- Dehumidifiers
- Wall-mounted condensation boilers with a max. power of 200 kW

Evaporators
For any condensate system, whenever the collecting point is below the collection sump (or the sewer).

Air-conditioned :
- Cooling battery;
- Fan coil units.

ADVANTAGES

• Ready to Plug: Easy installation

• Stainless: body made from composite material: doesn't rust.

• Compact product: Fits in a small space.

• Low noise level <50 dB

• Easy installation, servicing and maintenance. condensate tray allowing assembly with catchment on the left or the right depending on the installation.

• Alarm: normally closed contact (NC) 4A/250V. Class 2 circuit under 24V use.



CONDENSON CLASSIC

DESIGN

• Hydraulic part

Common pump-motor shaft.
Open centrifugal impeller.
2 metal rod floats :
- float 1: to start and stop the pump;
- float 2: alarm on a connection to one heater or another.

Vertical discharge.
Check valve that closes when the head reaches 1m.

• Single-phase synchronous motor

Bearing :	ball bearing
Speed :	2900 tr./mn
Max. intensity :	0,6 A
Winding :	1~230 V (± 10%)
Frequency :	50 Hz
Insulation class :	F
Protection index :	IP 20
Thermal protection :	prode 130°C
Noise level :	50dBA at 1 m

HYDRAULIC PERFORMANCE

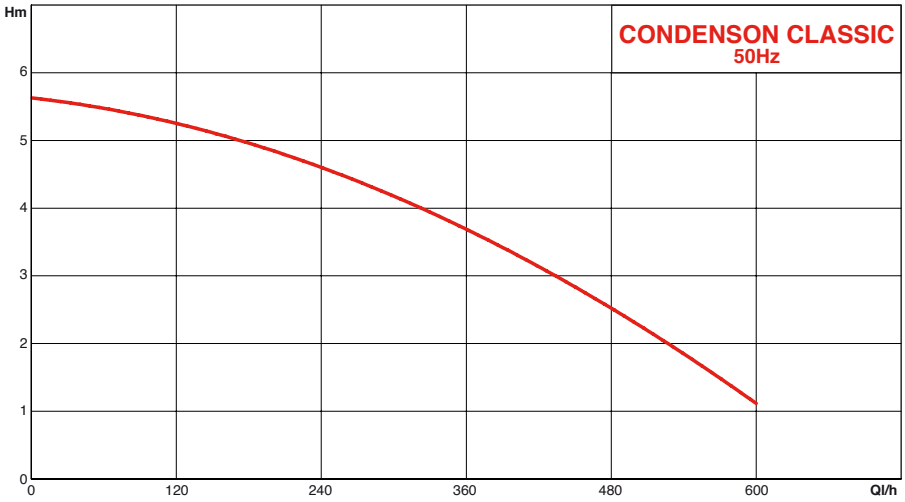

STANDARD CONSTRUCTION

Main parts	Material
Tank	Self-extinguishable ABS-V- 0
Cover	Self-extinguishable ABS-V- 0
Valve	ABS
Shaft	AISI 303
Fastenings	EPDM

STANDARDS & SPECIFICATIONS

• Low voltage directive 2006/95/CE and related standard EN60335-2-41
• Directive CEM 2004/108/EC and related standards :
EN55014-1
EN55014-2
EN 61000-3-2
EN 61000-3-3

• Low noise level based on standard EN ISO 3744.

CONDENSON CLASSIC

DIMENSIONS

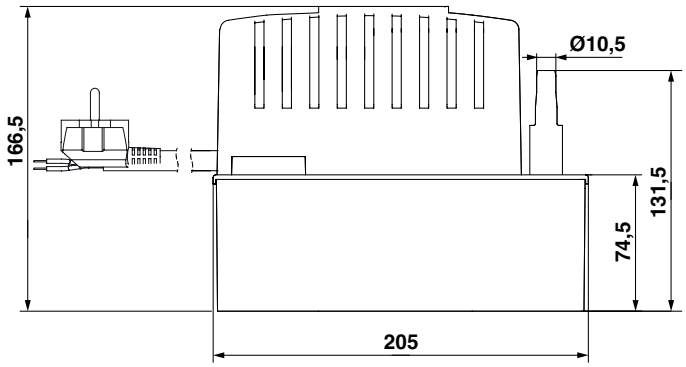

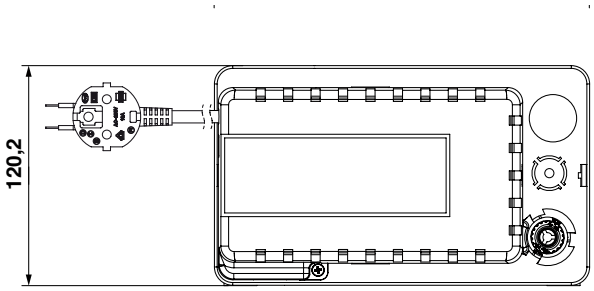

SECTIONAL DRAWING

Figure 1
1- Condensate inlet orifice (30mm)
2- Condensate inlet orifice (19 mm)
3- Clip to open the tank
4- Outlet orifice with check valve
5- Wall bracket
6- Tank
7- Alarm cable
8- Plug
9- Transport tongue
10- Blocking screw
11- Lid

Figure 2
1- Tank
2- Float switch of the pump
3- Alarm float switch
4- Alarm stop and start switch
5- Impeller
6- Clips to open impeller
A- Stop level
B- Start level
C- Alarm level

FIG. 1

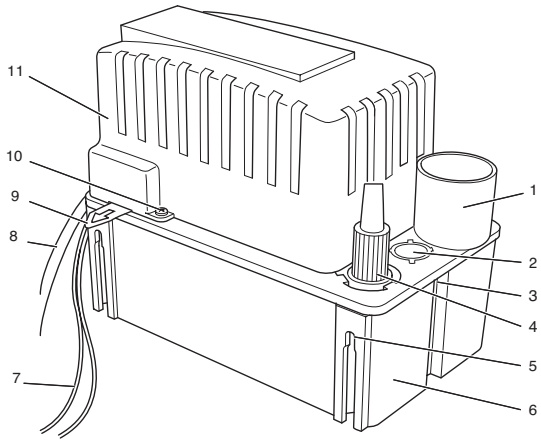

FIG. 2

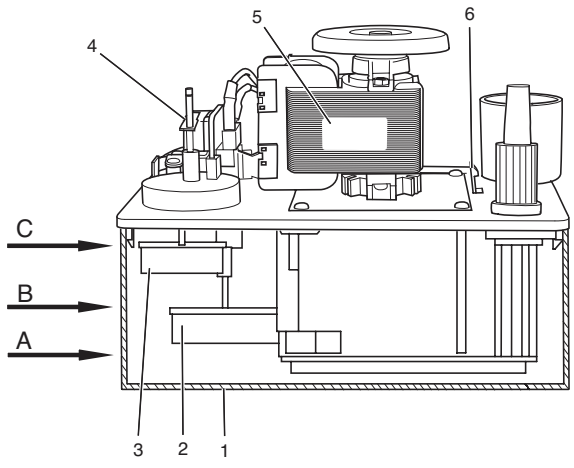

CONDENSON CLASSIC

INSTALLATION DIAGRAM



FEATURES

a) Electriques

—230V ± 10%, 50/60 Hz

Electrical connecting of the alarm

Providing of a 250 VAC NC dry contact with a 1A inductive and 4A resistive breaking capacity.

Electric power cable :

- 3 G 0,75 mm2 (18AWG) 300 V
- alarm via 1 G 0.75mm2 (18 AWG) 300 V cable

b) Assembly

- The module may be flat mounted (false ceilings, in the bottom of a cabinet, etc) or surface mounted.

c) Packaging

Weight : 2 kg

Condenson classic is delivered with:

- CE plug and 2m of cable
- alarm (not included)
- valve
- Ø 10 mm flexible tube (cable : 5m)
- bag with 2 screws and pegs for wall mounting.

RECOMMENDATIONS

1 - The disposal PH must be checked to avoid any risk of corrosion to pipes that cannot withstand weak acids.

2 - The alarm consists of a 250 VAC NC dry contact with a 1A inductive and 4A resistive breaking capacity to cut off refrigeration output if there is a risk of overflowing.

Sanitary hot water

Circulators

Zen Ô home	**1239**
Thermo'clock	**1243**
Celciux	**1247**
NSB-NSB-S-DSB	**1251**
SXS	**1257**

Pump

NEC	**1265**

RANGE OF USE

Flow rates up to:	**0,35 m³/h**
Maximum operating pressure:	**10 bar**
Minimum pressure at intake:	**0,2 bar***
Circulator temperature range:	**+2°C to +65°C**
Maximum ambient temperature:	**+ 40°C**
Water hardness:	**20 dH**
circulating pump openings:	**15 (1")**

* to + 65° C

ZEN Ô HOME

SIMPLE CIRCULATING PUMPS
domestic hot water
50 Hz

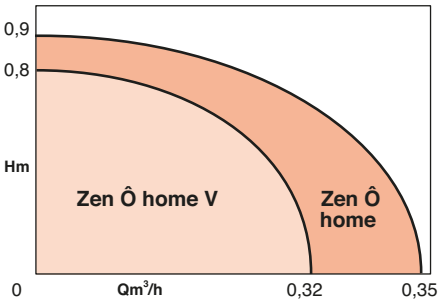

APPLICATION

This circulating pump can be used solely for drinking water. Its field of use is circulating systems for drinking water / domestic hot water circuits in:

- Industrial systems.
- Domestic systems.

Hot water obtained merely by turning on a tap, no stagnant water in the domestic hot water circuit.

ADVANTAGES OF THE RANGE

- **Saves energy and water**
- **Convenient to use**
- **Easy to install**
- **Zen Ô V version with non-return valve and ball valve**
- **Robust design**

Certified ACS

• Zen Ô home V



• Salmson connector



ZEN Ô HOME

ADVANTAGES OF ZEN Ô HOME

• Saves energy and water.

- very low consumption of electricity: from 2 to 4.5W.
- Its synchronous motor saves 80% of the energy used by a traditional domestic circulating pump.
- An end to wasting water, hot water obtained merely by turning on a tap.

• Convenient to use

- Hot water obtained merely by turning on a tap.
- Extremely quiet circulating pump.

• Easy to install

- Compact: takes up less space.
- Easy and fast electrical connexions with the Salmson connector. No tools needed.

• Robust design

- Standard prefabricated insulation to give the best performance
- Stainless steel impeller for longer life and protection against corrosion.

DESIGN

• Motor

Speed :	3000 rpm
Single-phase winding :	230 V
Frequency :	50 Hz
Insulation category :	155 (F)
Complies with:	EC standards for low voltage EMC Directive

BASIC CONSTRUCTION

Main components	Material
Body of pump	Laiton
Motor casing	Polypropylene
Impeller	Stainless steel
Rotor shaft	Ceramic
Bearings	Graphite
Rotor housing	Stainless steel
Pump gasket	Ethylene-Propylene

HYDRAULIC PERFORMANCE

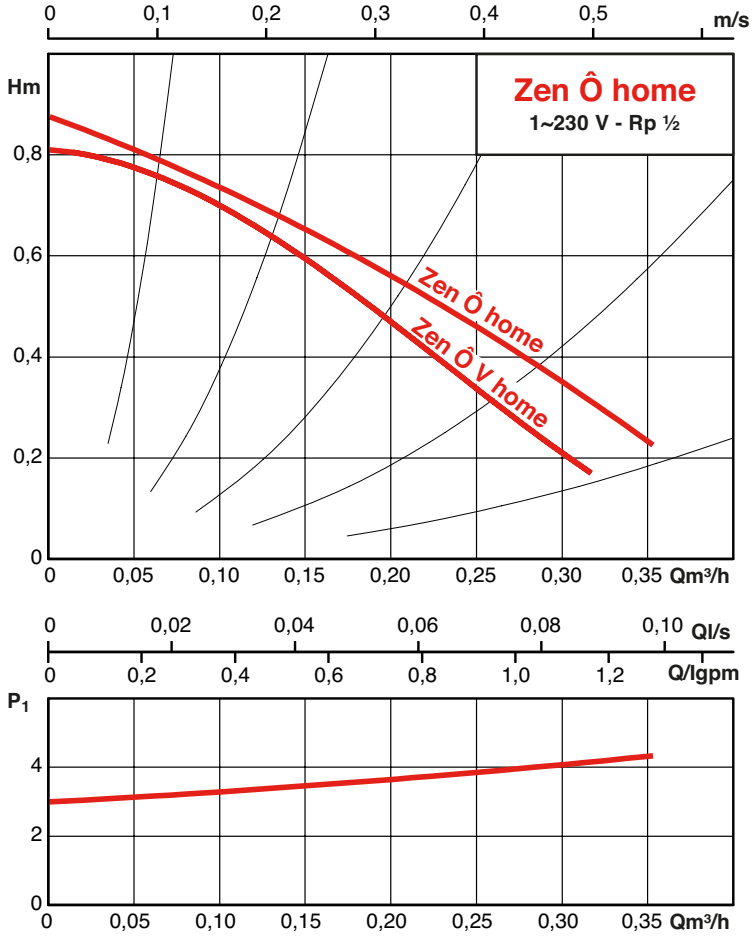

INSTALLATION DIAGRAM AND CHOOSING THE RIGHT PUMP

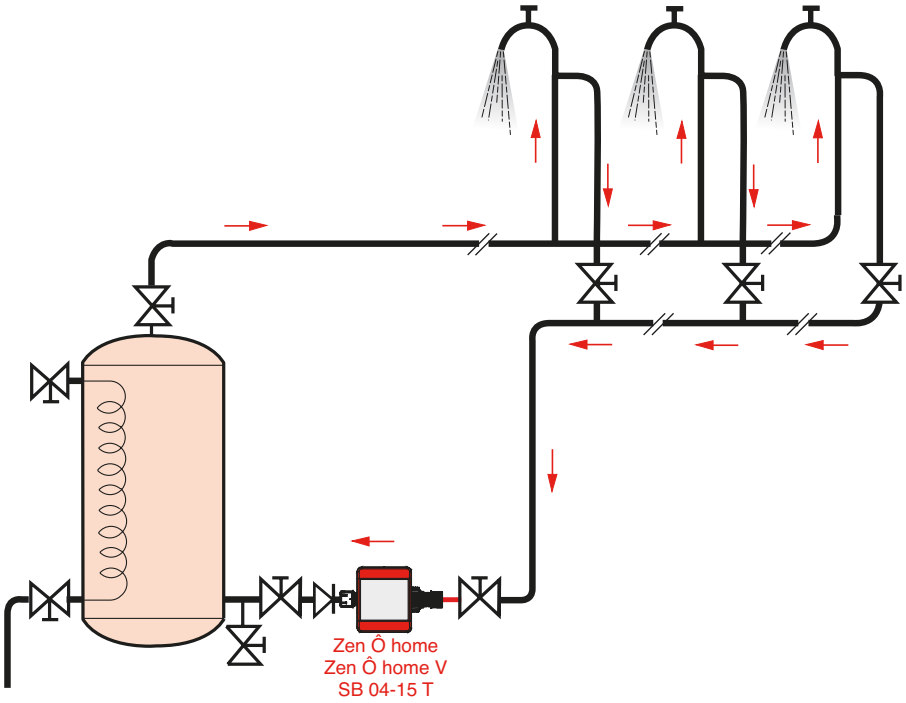

Domestic hot water circuit:

- Maximum temperature of the circuit 60 °C (in accordance with the Unified Technical Document) and up to 80°C for heat disinfection.
- Recommended flow speed between 0.5 and 1 m/s maximum.
- Circulating pump mounted on the return of the circuit, after the taps.

Total length Circuit pipework	**1 to 10 taps**
0 to 35 m	Zen Ô home Zen Ô home V Thermo'Clock SB04-15 T NSB05-15B
36 to 75 m	NSB10-15B
76 to 100 m	NSB15-15B

Pumps chosen as a guide, using the following criteria:

- Category 2 insulation for the pipework
- DHW temperature: 60°C
- Temperature loss over the circuit: 3°C
- Ambient temperature: 20°C
- External temperature: : - 7°C
- pipework Ø: 15/21

EXPLODED VIEW



ZEN Ô HOME

FITTING POSITIONS

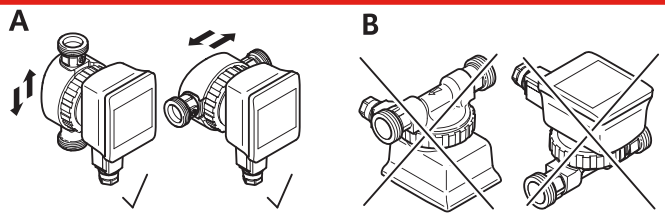

SIZES AND ELECTRICAL REQUIREMENTS

• Zen Ô home

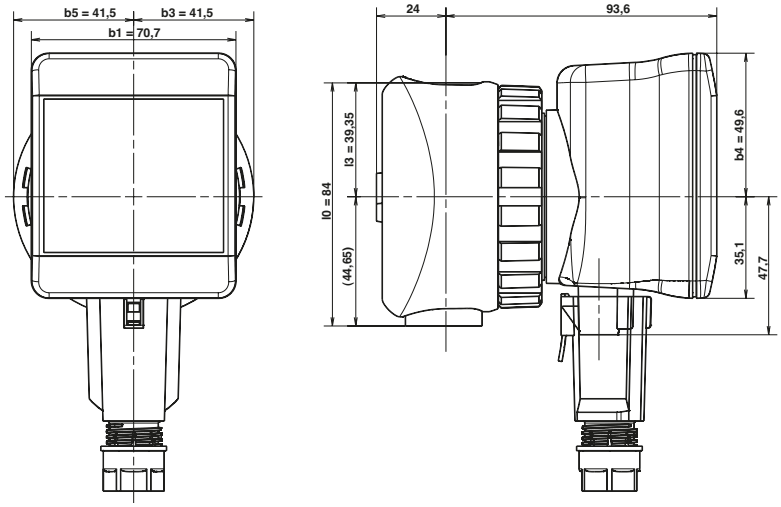

• Zen Ô home V

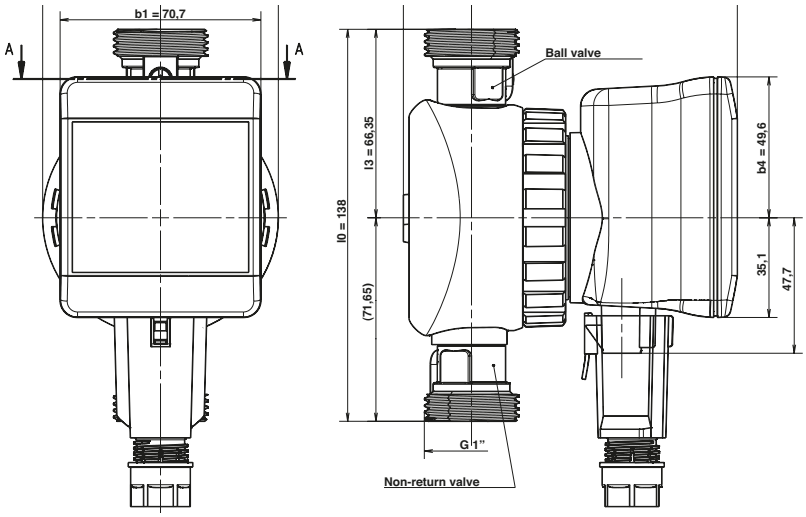

FEATURES

a) Electrical

All types single-phase 230 V - 50 Hz
Standard voltage:
- tolerance 50 Hz ± 10 %

b) Fitting

- Fitting direct onto horizontal or vertical pipework, on the return pipe, after the taps
- Motor always horizontally placed.

Connection to the installation:
Depending on model:
- copper soldered connections (R) or brass screwed connections (RU brass) onto copper pipework,
- steel screwed connections (RU) onto galvanised steel pipework.

c) Packaging

- Pump delivered with:
- Heat insulation.
- Salmson. connector.
- Gaskets for the version Zen Ô home V.

d) Maintenance

- Appliance automatically exchanged.

RECOMMENDED ACCESSORIES

- Soldered connections
- Brass or steel pipe unions
- Shut-off valves
- 2m cable with lateral connector (per 10)

Order reference	MOTOR			PUMP		Connection on	
	Speed rpm	P1 nominal W	current A	mass kg	Ø G mm	Tube to be soldered	Thread rod
Zen Ô home	3000	4,5	0,05	1,1	-	-	-
Zen Ô home V	3000	4,5	0,05	1,3	G1	RU 2022 (laiton)	RU 1521 (laiton)

OPERATING RANGES

Flow rates of up to:	**0.35 m³/h**
Max. operating pressure:	**10 bar**
Min. intake pressure:	**0.2 bar***
Max. loop temperature:	**+ 80°C**
Circulating pump temperature range:	**0° to + 95°C**
Max. ambient temperature:	**+ 40°C**
Water hardness (TH) :	**35°f**
ND of circulating pump ports:	**15 (1")**

* to + 65° C

THERMO'CLOCK

SINGLE DOMESTIC CIRCULATING PUMPS

Domestic hot water
50 Hz

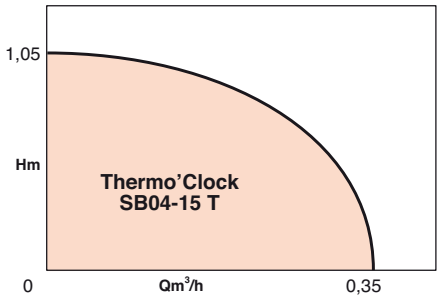

APPLICATIONS

This circulating pump is only suitable for drinking water.
Faster circulation in domestic hot water distribution loops.
- Industrial systems.
- Domestic installations.

Instant hot water on demand, no stagnant water in the DHW loop.
Ideal for floor-standing boilers

BENEFITS OF THE RANGE

- **Compact size**
  - **The Thermo'clock has an integral non-return valve and gate valve in a port-to-port distance of just 138 mm**

- **Extremely quiet**
  - **Special mechanical design**

- **Reliable**
  - **New design prevents the build-up of lime scale**

- **Quick electrical connections**
  - **Plenty of room for electrical cables**
  - **Large gap between the three levers**
  - **«Earth - Live - Neutral» marked very clearly**
  - **Easily accessible ports, for wiring of up to 2.5 mm²**

- **Easy to clean**
  - **Easily dismantled for any repairs to components in contact with water**

Certified ACS



• Thermo'Clock SB04-15T

THERMO'CLOCK

THERMO'CLOCK + POINTS

+ Comfort

- The accuracy of the thermostat guarantees hot water at the desired temperature on demand.

+ Safety

- Consolidates the boiler's role in the fight against legionnaire's disease.
- Boilers increasingly incorporate an automatic thermal disinfection function to kill off legionellosis bacteria. This operation entails raising the water temperature in the domestic hot water tank (to approx. 70°C). The Thermo'clock's «Thermal Disinfection» function detects this operation and starts operating to facilitate the circulation of water in the loop.
- Automatic degumming

+ Savings

Energy:

- Reduced operating time
- The Programmer allows the operation to be adapted to the users' needs

Water:

- Less wasted water
- Instant hot water distribution

Time:

- No more waiting for hot water.

SETTINGS

• Icons

Time menu
Setting the current time.

Programmer menu
Possible to programme up to 3 operating time slots (On/Off) per 24 hr period.

Thermostat menu

- Adjustment of the temperature setting.
- Possible to activate or deactivate the «thermal disinfection» function.

Display function

- Alternating display of the current time and the minimum temperature setting.
- If the «Thermal Disinfection» message is displayed, this function is activated

• Simple and intuitive settings

Turn to select an icon or adjust a parameter



Press for > 3 sec: Select a menu
Quick press: Confirm the setting of a parameter

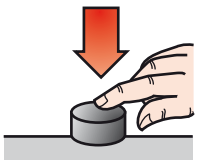



DESIGN

• Motor

Speed:	2600 rpm
Single-phase winding:	230 V
Frequency :	50 Hz
Insulation class:	155 (F)
Conformity:	NF EN 60.335.2.51
	CE

BASIC CONSTRUCTION

Main parts	Material
Pump housing	Brass
Motor casing	Polypropylene
Impeller	Composite material
Rotor shaft	Ceramic
Bearings	Graphite
Rotor sleeve	Stainless steel
Pump gasket	Ethylene-propylene

HYDRAULIC PERFORMANCE

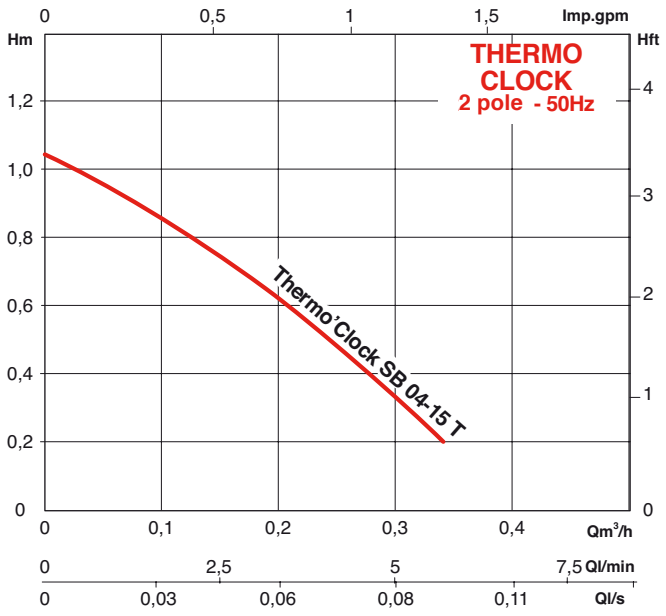

INSTALLATION DIAGRAM AND CHOICE OF PUMP

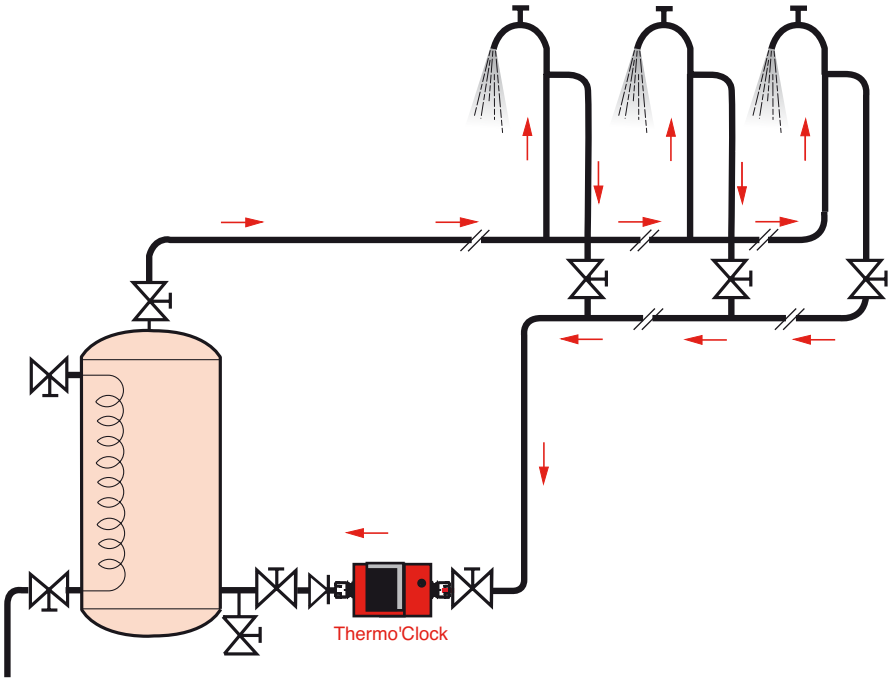

Domestic hot water distribution loop:

- Max. temperature of loop: 60°C (according to DTU [French Codes of Practice]) and up to 80°C for thermal disinfection.
- Recommended max. flow rate of between 0.5 and 1 m/s.
- Circulating pump fitted on the return leg of the loop, after the drawing-off points.

Total length of pipework in the loop	1 to 10 drawing-off point(s)
0 to 35 m	Zen Ô home Zen Ô home V Thermo'Clock SB04-15 T NSB05-15B
36 to 75 m	NSB10-15B
76 to 100 m	NSB15-15B

Choices given for information only, using the following criteria:

- Insulation class 2 for pipework
- DHW temperature: 60°C
- Temperature decrease around the loop: 3°C
- Ambient temperature: 20°C
- Exterior temperature: - 7°C
- Ø pipework in loop: 15/21

EXPLODED VIEW



• Thermo'Clock SB04-15T

THERMO'CLOCK

INSTALLATION POSITIONS

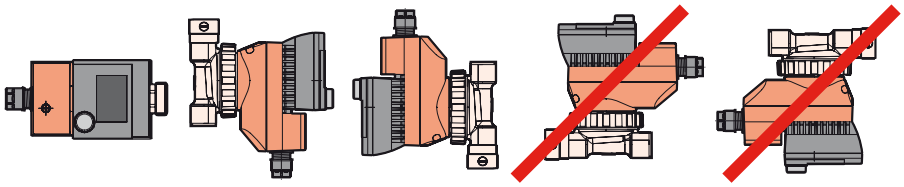

ELECTRICAL AND DIMENSIONAL SPECIFICATIONS

• **Thermo'Clock SB 04-15T**

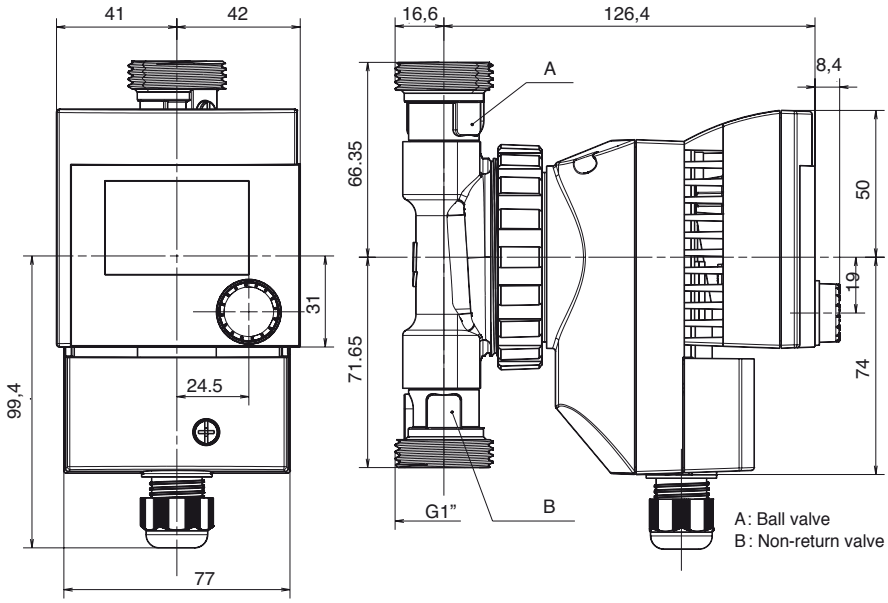

FEATURES

a) Electrical

All types on 230 V - 50 Hz single-phase
Standard voltage:
- tolerance 50 Hz ± 10 %

b) Fitting

- Direct installation on horizontal or vertical pipework, on the return leg of the distribution loop, after the drawing-off points.
- Axis of motor always horizontal.

Connection to the system:
According to the model:
- soldered copper connectors (R) or screw-on brass connectors (RU brass) on copper pipework
- screw-on steel connectors (RU) on galvanised steel pipework.

c) Packaging

- Supplied with gaskets but without connectors.

d) Maintenance

- Standard replacement of the appliance.

RECOMMENDED ACCESSORIES

- Soldered connectors
- Brass or steel pipe unions
- Shut-off valves

Order reference	MOTOR			PUMP		Connection onto	
	Speed rpm	P1 rating W	Current A	Weight kg	Ø G mm	Soldered pipe	Threaded pipe
Themo'clock SB 04 – 15 T	2600	22	0,25	2,1	G1	RU 2022 (brass)	RU 1521 (brass)

RANGE OF USE

Flow rate up to	**2,5 m³/h**
Manometric head up to	**5 m**
Max. operating pressure	**10 bar**
Max. temperature in circuit	**+ 80°C**
Max. temperature Circulating pump	**+ 110°C**
Max. ambient temperature	**+ 40°C**
Hardness of the water (TH)	**35°f**
ND of ports	**DN 25 (1"1/2)**

CELCIUX

CIRCULATING PUMPS HIGH PERFORMANCE

Bronze Body
Domestic hot water
50 Hz

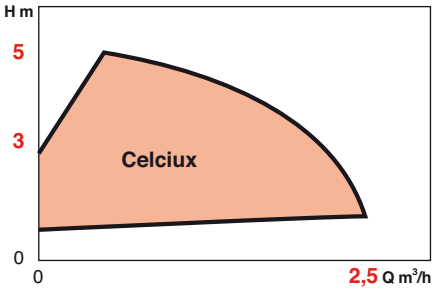

APPLICATIONS

This circulating pump is suitable only for drinking water.
For accelerated circulation in domestic water systems.
- Domestic and small collective installations

To obtain domestic hot water as soon as the taps are turned on

Certified ACS

ADVANTAGES

- **Saves energy**
  High performance motor and technology
- **Reliability**
- **Easy selection**
- **Fast and easy to install**
- **Preserves the quality of the water**



• Celciux

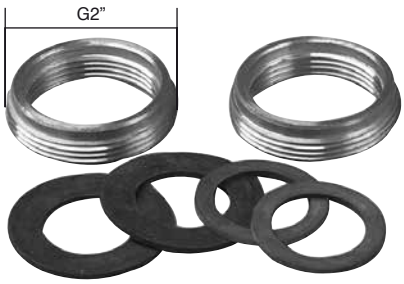

• Adaptor rings 1½" - 2" Ref. 4051850

CELCIUX

DESIGN

Hydraulic Part

- Body with threaded ports for fitting direct on pipework
- Body of pump: Bronze

• Motor

- Monophase, wet runner, bearings lubricated by the fluid pumped.
- Self-adjusting, adapts to the pressure required by the installation.
- Self-protected, by impedance, not needing exterior protection
- synchronous motor with E.C.M. (Electronically Commuted Motor) technology fitted with a permanent-magnet rotor. The rotating magnetic field of the stator is engendered by the coils being electronically switched.

This rotating field creates a continuous torque by attraction of the opposite magnetic poles of the rotor, thus controlling its position (synchronous motor). This gives the motor optimum performance, whatever its speed.

Protection class:	IP 44
Max. temperature of the fluid being pumped :	TF 110
CEM compliance :	- emission 61000-6-3
	- immunity 61000-6-2

ENERGY-SAVING

High performance circulating pumps, with optimisation of the point of operation.
Up to 80 energy-saving compared with a traditional circulating pump.

IDENTIFICATION

CELCIUX

Circulating pump for domestic systems
Bronze Body
H max : 5 m
ND 25 - Centre distance: 180 mm

BASIC CONSTRUCTION

Main components	Material
Pump casing	Bronze
Impeller	Composite
Shaft and can	Stainless steel
Impeller joint ring	Stainless steel
Bearings	Graphite
Waterproof gasket	Ethylene-propylene

HYDRAULIC PERFORMANCES

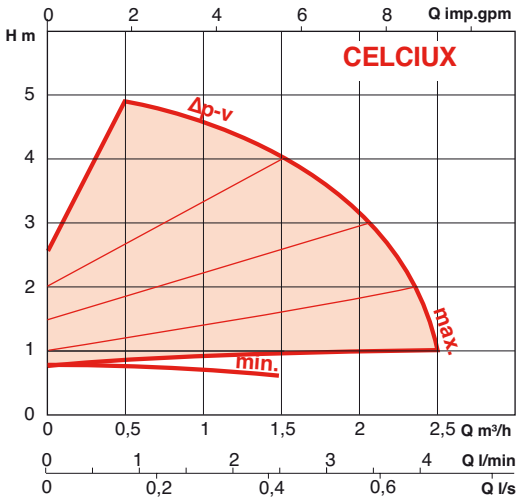

INSTALLATION

• Fast and easy to install

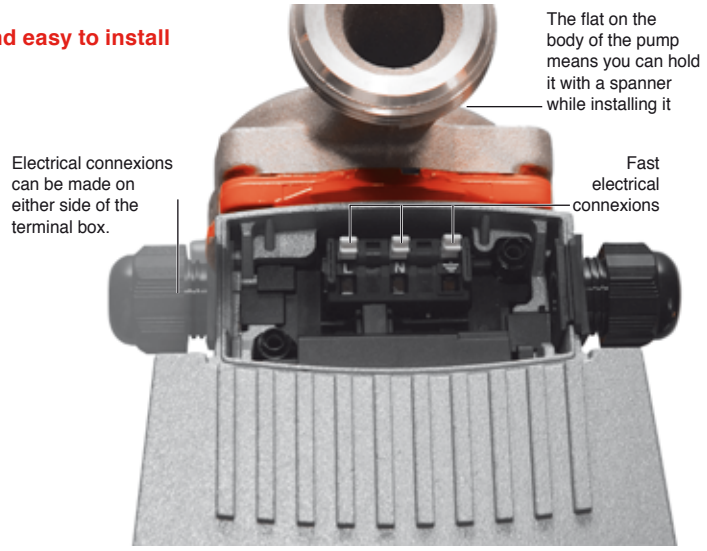

SETTINGS

ALL SETTINGS ON JUST ONE BUTTON



The selector button on the front of the terminal box selects the hydraulic curve to suit the needs of the installation.
The figures from 1 to 5 show the manometric head.
All the intermediate positions are possible for meet the needs of any installation.

INSTALLATION DIAGRAM

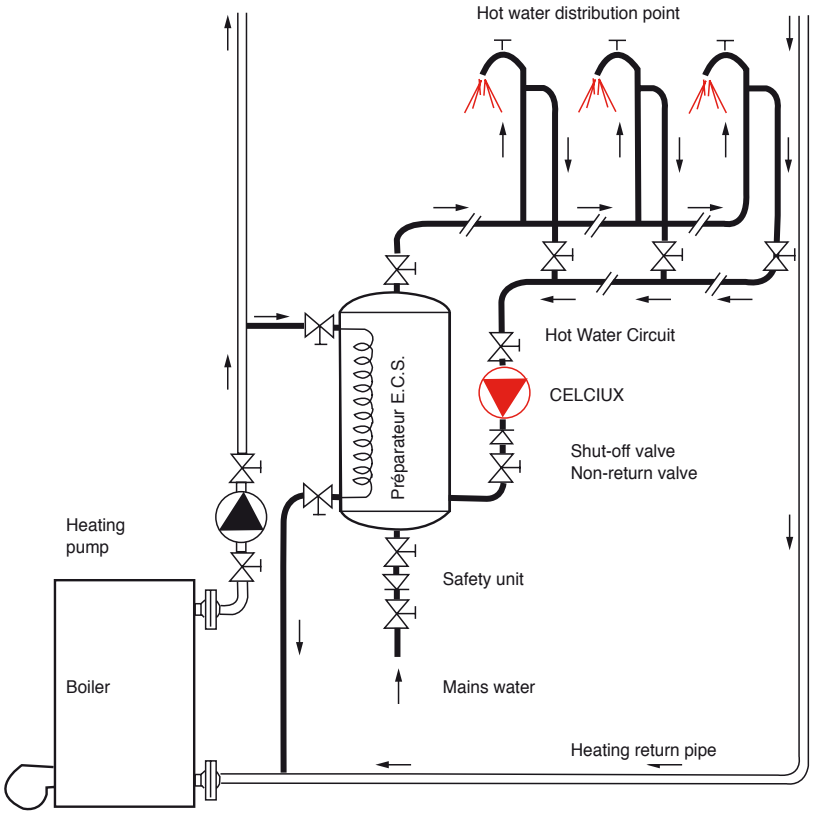

Domestic hot water distribution system:

- Maximum temperature of the system 60°C (according to D.T.U) and up to 80°C for sterilisation purposes.
- Recommended speed of flow between 0.5 and 1 m/s max.
- Circulating pump mounted on the return pipe, after the taps.

CROSS-SECTION

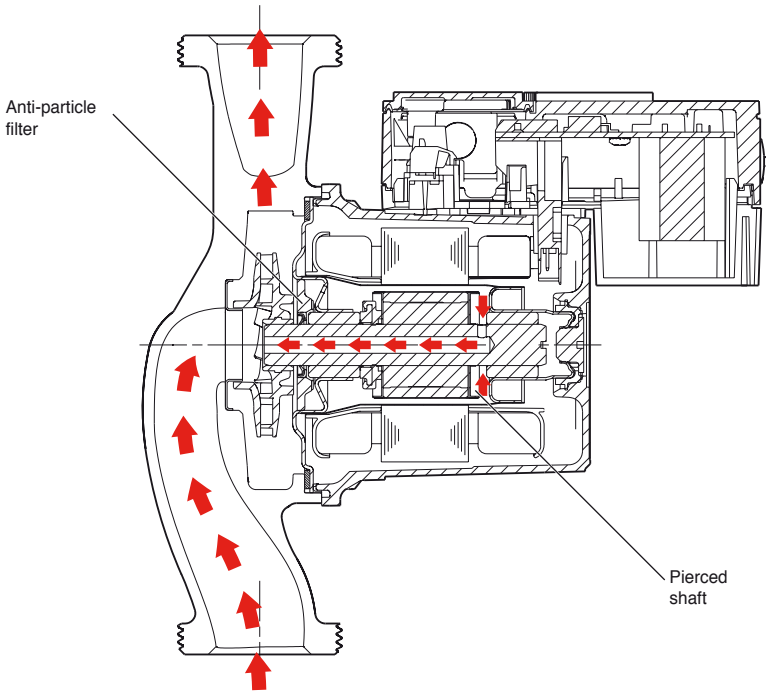

CELCIUX

ELECTRICAL FEATURES AND SIZES

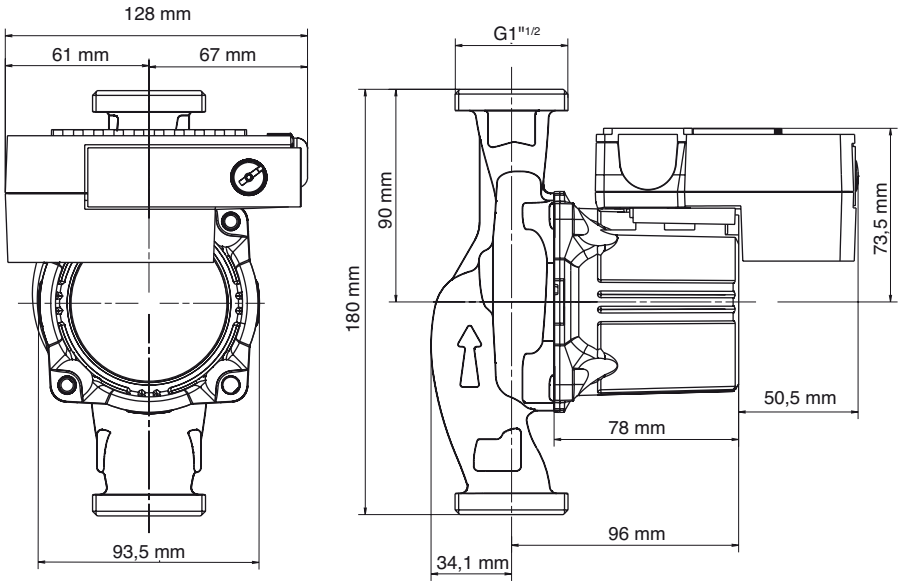

SPECIAL FEATURES

a) Electrical
- Monophase 230 V - 50 Hz (60Hz) with condenser built into the terminal box.
- Motor protected by circuit-breaker – not essential.

b) Fitting
- Motor shaft always horizontal.
- Connected to the installation by pipe unions.

c) Packaging
- Delivered with joints, without pipe unions.

d) Maintenance
- Appliance automatically exchanged.

If you want information on the CELCIUX with centralised technical management system, **please contact us.**

Order Reference	MOTOR						PUMP			
	Speed (Tr/min)		P1 (W)		I1 (A)		Entraxe	Connecting on threaded pipe		Mass (kg)
	Min	Max	Min	Max	Min	Max		Ø 3/4"	Ø 1"	
CELCIUX	1 400	3 500	5,8	59	0,07	0,46	180 mm	RED 2027 ref 4016195	RU 2634 ref 4016173	2,9

FITTING POSITIONS

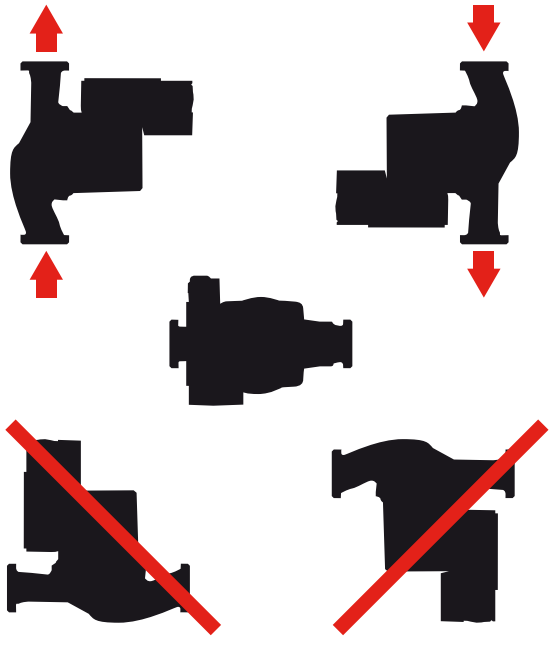

ACCESSORIES



• Adaptor rings ØG 1"1/2 - 2"
Ref.: 4051850



• Shut-off ball valve
RU 2634 - Réf.: 4063825

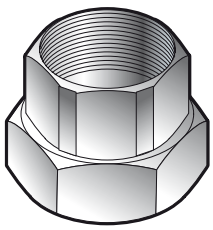

• Pipe union

OPERATING LIMITS

Flow rates up to :	**6 m³/h**
Heads up to :	**6,5 m**
Max. operating pressure :	**10 bar**
Max. loop temperature :	**+80°C**
Max. circulator temperature:	**110°C**
Max. ambient temperature :	**+40°C**
Water hardness (TH) :	**35°F**
ND ports :	**15-20-25**

NSB - NSB-S - DSB

SINGLE AND TWIN-HEADS CIRCULATORS

Bronze and stainless steell casings Domestic secondary hot water range - 50 Hz

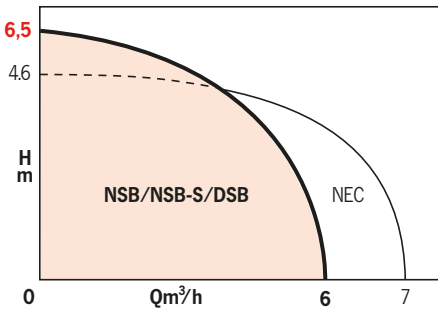

APPLICATIONS

This circulator is suitable for drinking water only.
Hot water accelerated circulation in distribution loops.

- Domestic installations and small commercial installations.

Hot water on opening tap.

ADVANTAGES

- **Water quality preserved:**
  - **constant water renewal in rotor chamber ;**
  - **choice of materials compatible with network ;**
  - **DSB "Anti legionella" Infection System.**
- **Anti-blocking system guaranteeing exceptional resistance to hard water, up to 35°F.**
- **Easier choice :**
  - **3 speed,**
  - **adaptation accessories enabling replacement without altering the piping.**
- **DSB : continued availability of an emergency circulator with perfect irrigation of the domestic hot water loop due to the ALS system.**
  - **Simultaneous operation possible in the case of increase in flow rate.**
- **Automatic permutation possible through the Pump Management Unit (see specific instructions: MGP N° 300-88).**
- **For NSB-S: integrated and automatic motot overload protection.**



• NSB 25-20B with [1] & without counter flanges [2]

1) assembled with CBOV3342, perfectly interchangeable with the old references SA15 (distance between ports = 158 mm)





• NSB 15-15B with [1] and without adapters [2] : Dual assembly possible

1) NSB 15-15B with kit150 = distance between ports 150 mm ØG1¼
2) NSB 15-15B = distance between ports 130 mm ØG1

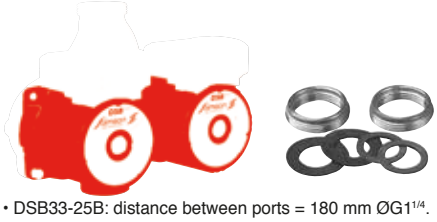

• DSB33-25B: distance between ports = 180 mm ØG1¼.
DSB33-25B with "BAG-ADAPT" distance between ports = 180 mm ØG2

DSB33-25B "Anti legionella" Infection System (ALS)

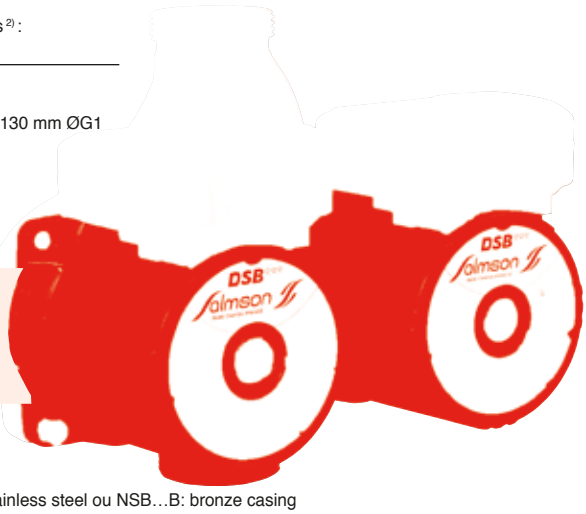

NSB-S: stainless steel ou NSB…B: bronze casing
DSB: bronze casing : a choice of material compatible with network

NSB - NSB-S - DSB

DESIGN

• Hydraulic part

Casing with threaded ports for direct assembly on piping :
- in bronze for assembly on copper piping (NSB and DSB) ;
- in stainless steel for assembly on galvanized piping (NSB-S).

Rotating parts in contact with water in anti-corrosive material.
Stainless steel ring at impeller seal.
DSB : single bronze casing with suction and discharge ports on the same axis.
DSB : check valve integrated with the “Anti legionella” Infection System.

• Motor

3 speed (NSB 05-15B single speed).
Manual speed change.
Wet rotor and self-lubricating bearing bushings.
Capacitor incorporated in the terminal.

Speed :	see table
Winding 1-phase :	230 V
Frequency :	50 Hz (option 60 Hz)
Insulating category :	F (155°C)
Conformity :	CE
NSB-S Specific :	IP 44
Immunity :	EN 61000-6-2
Emission :	EN 61000-6-3

STANDARD CONSTRUCTION

Main parts		Material
Pump casing	NSB…B	Bronze
	NSB-S	Stainless steel
	DSB	Bronze
Impeller		Composite material
Impeller shaft		Ceramic
Bushings		Graphite
Can		Stainless steel
Leaktight seals		EPDM

IDENTIFICATION

NSB - S - 33 - 25 B

- domestic range
  D : twin casing
  N : single casing
- Q nominal
- Ø suction and discharge ports
- Type of casing :
  B = bronze
  S = Stainless steel

PRESELECTION CURVES AT MAXIMUM SPEED

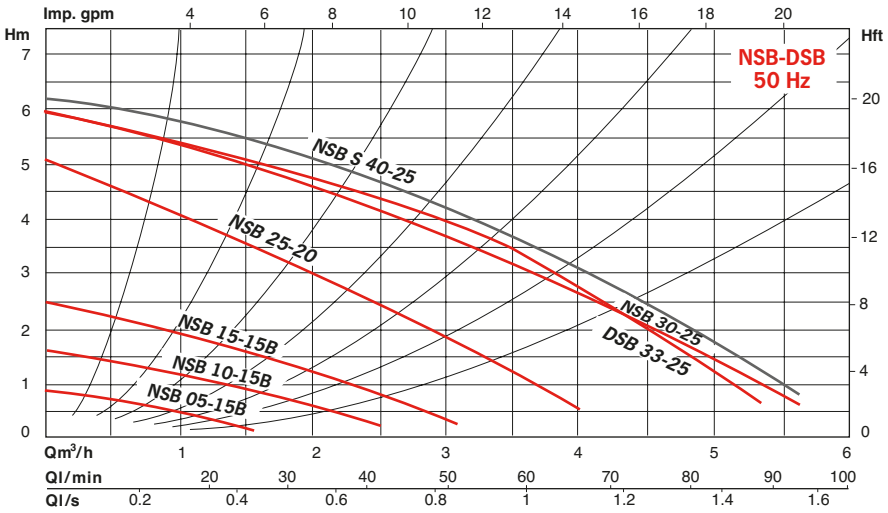

FITTING POSITIONS

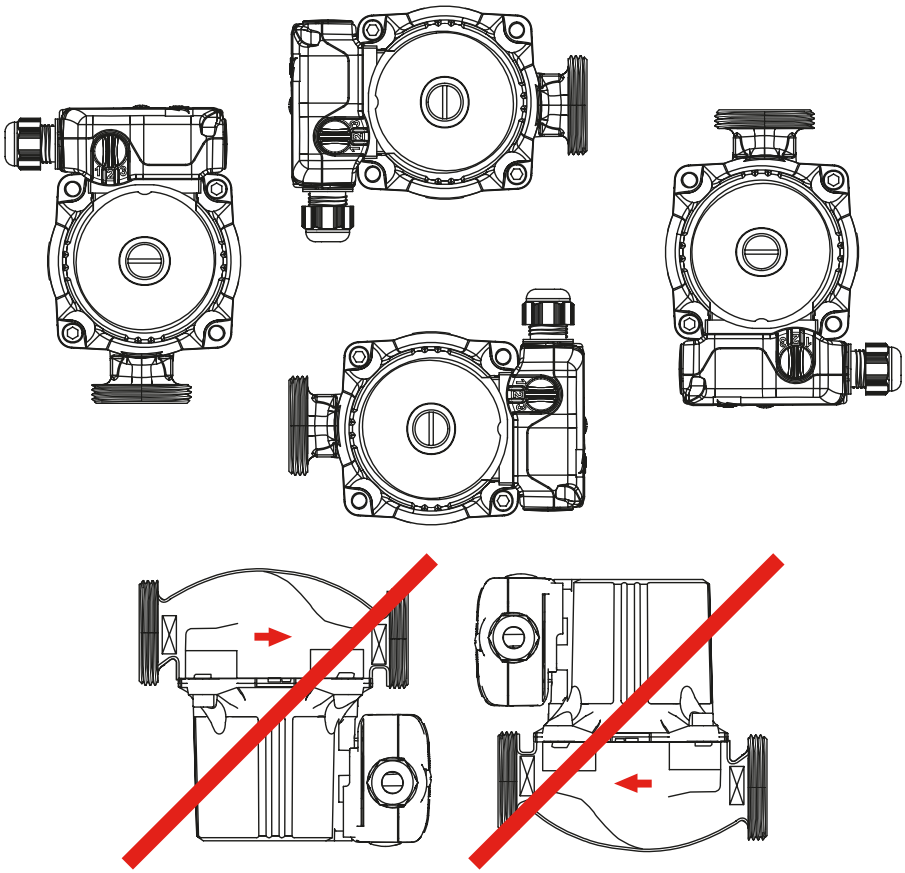

SECTIONAL DRAWINGS

• NSB-S

Interior of the single circulator

1 - Stainless steel casing proposed on wide diameter apparatus - compatibility with galvanized steel piping.

2 - Ceramic shaft :
- constant renewal of water, temperature maintained above the thereshold of lime precipitation.

3 - Stainless steel cartridge and rotor with a stainless steel sleeve.

4 - Integrated and automatic motor overload protection for running security.

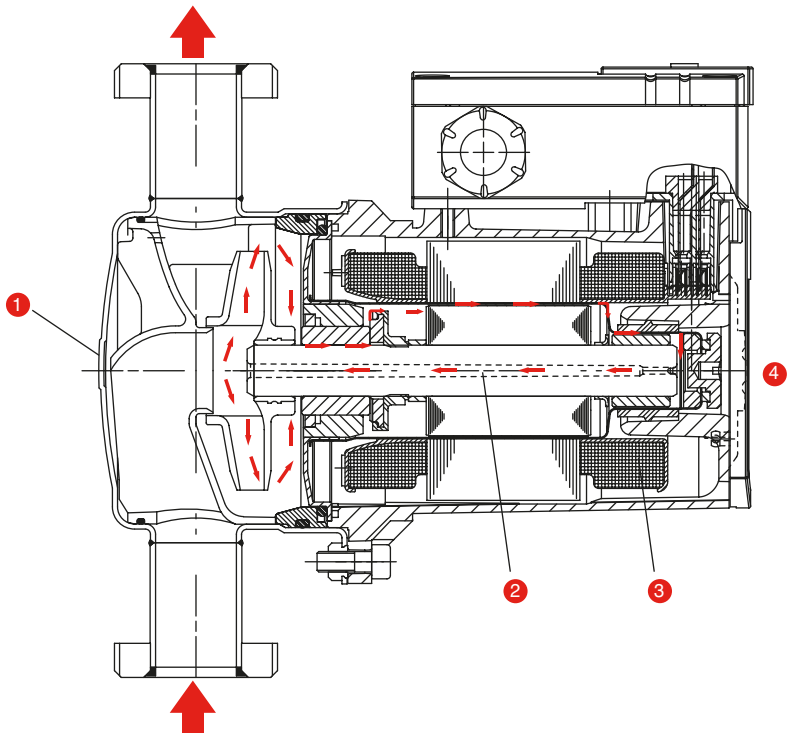

• Twin circulator: principle of the anti-legionella infection system (ALS) (Patent pending).

Interior of the single circulator

The ALS gives constant circulation and renewal of water in the hydraulic casing of the emergency circulator when its motor is shut down :
- no stagnant water (no ox-bow phenomenon);
- maintaining a steady temperature between the two circulator units which avoids formation of “legionella” infection in hot water installations adjusted to a normal operating temperature.

1 - Casing with motor in operation.

2 - Casing with motor shut down

→ - Water circulation in the domestic hot water loop.

→ - ALS water circulation.

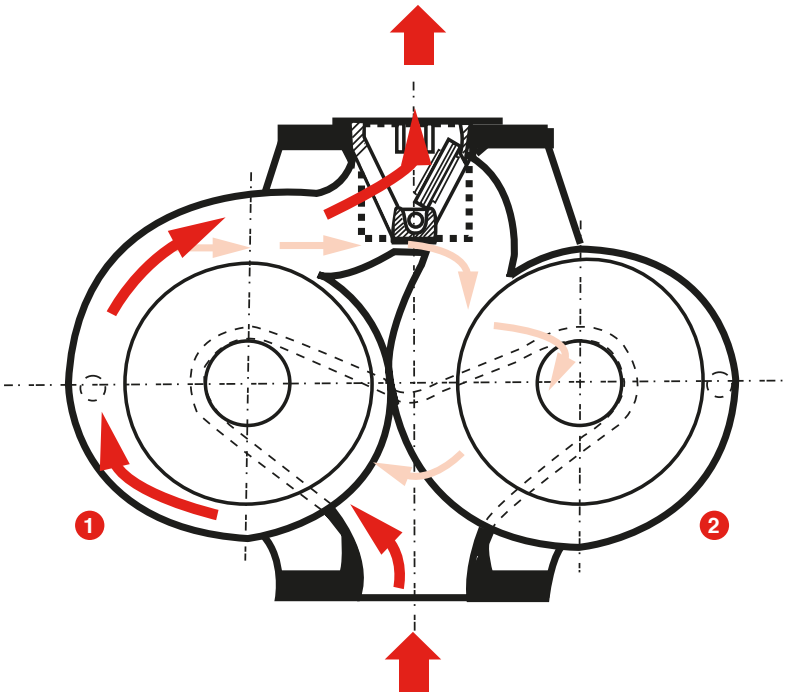

NSB - NSB-S - DSB

HYDRAULIC PERFORMANCES

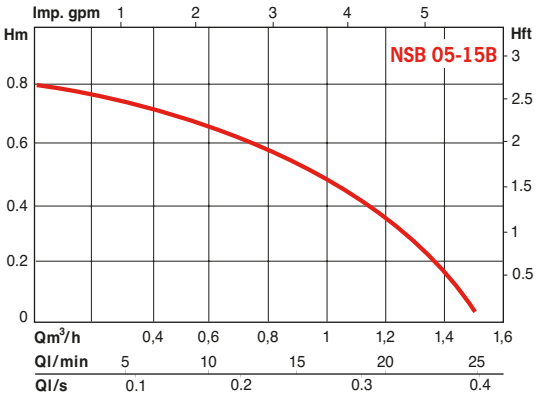

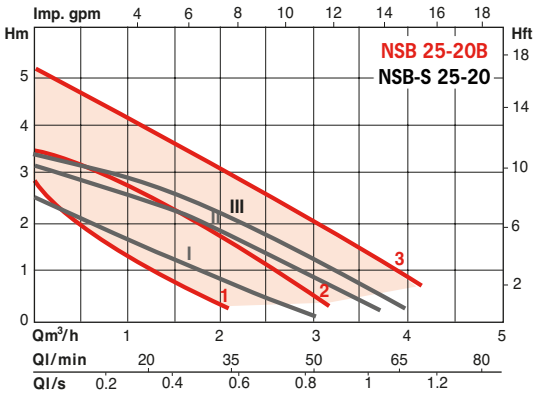

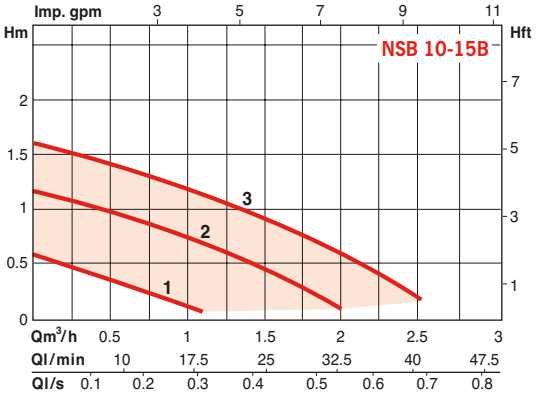

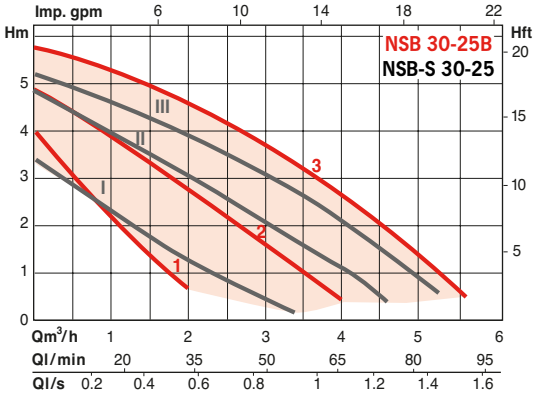

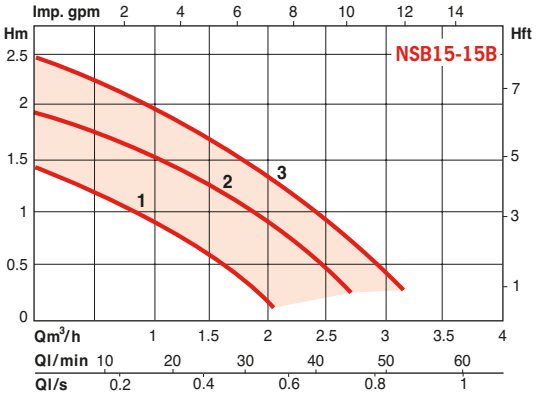

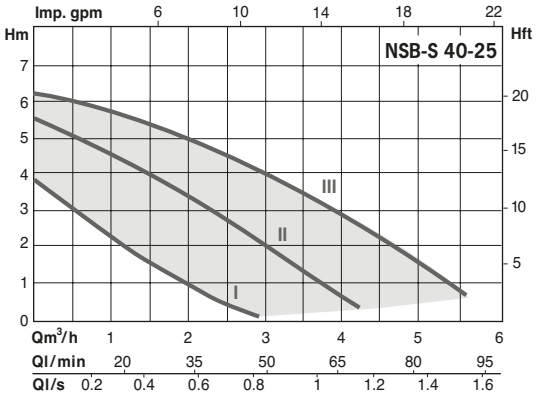

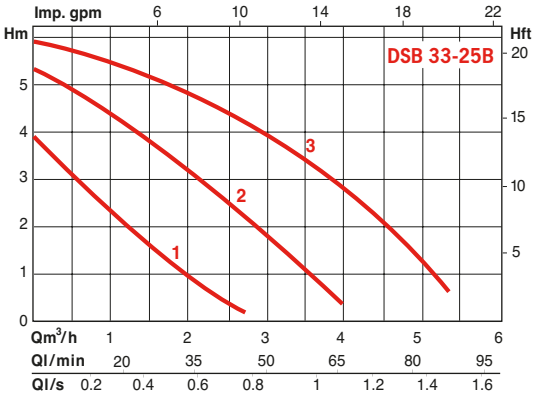

INSTALLATION DIAGRAM

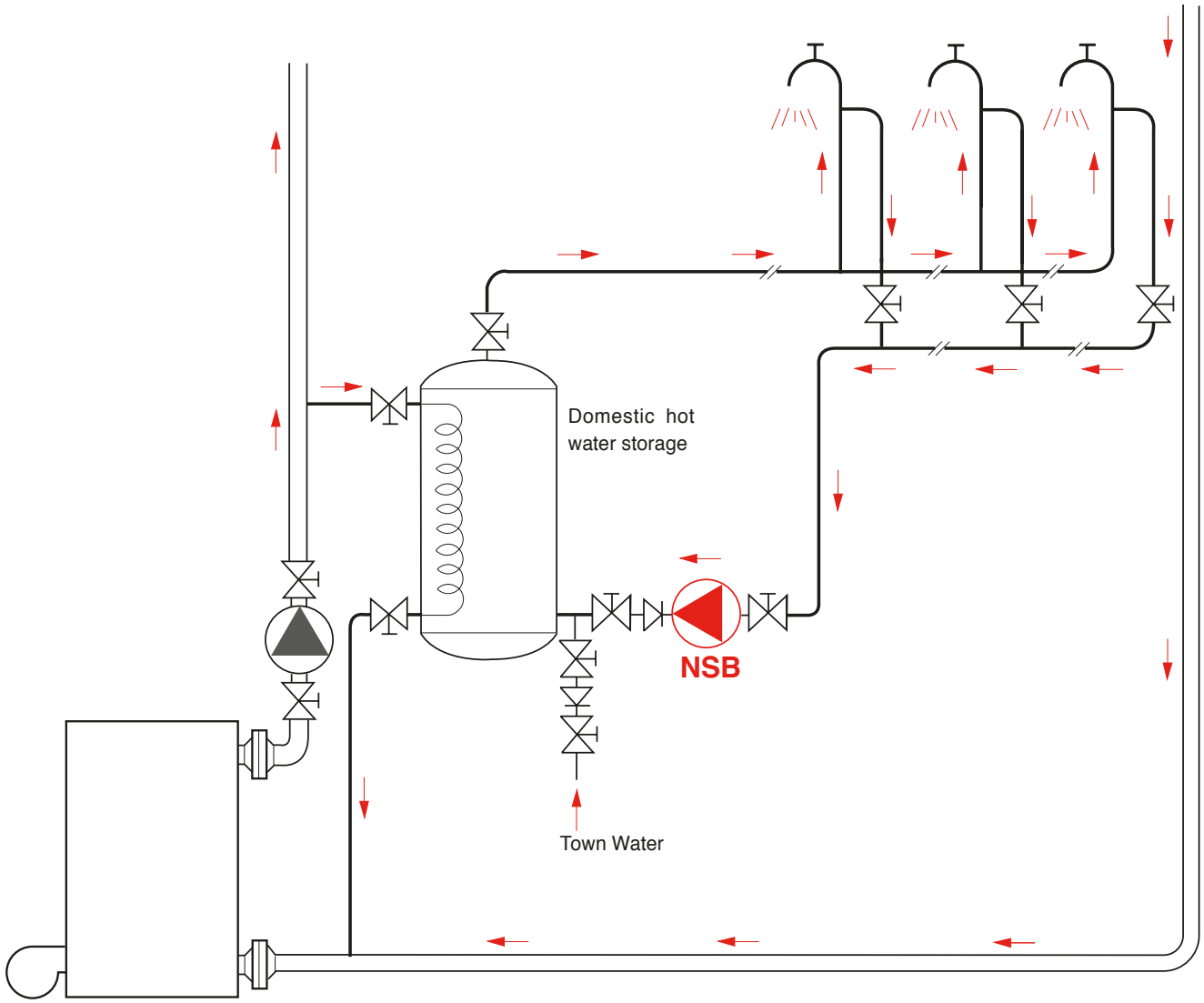

Domestic hot water distribution loop :

- Loop maximum temperature 60° C (according to Standard Local Rule).
- Recommended flow speed between 0.5 and 1 m/s maximum.
- Circulator assembled on the backflow of the loop, after the drawing points.

NSB - NSB-S - DSB

ELECTRICAL DATA AND DIMENSIONS

NSB-B bronze casing

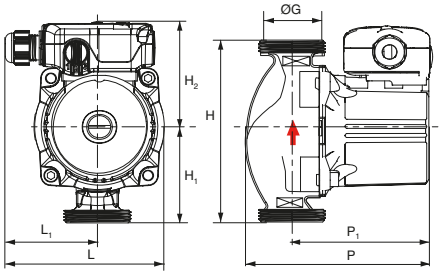

NSB-S stainless casing

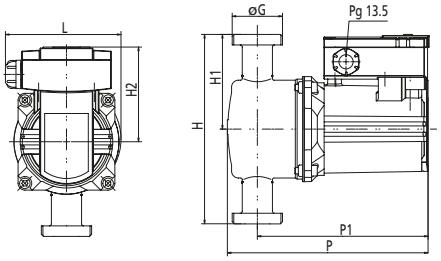

DSB bronze casing

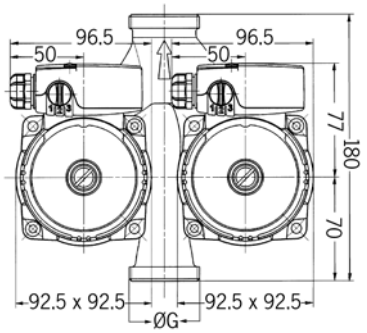

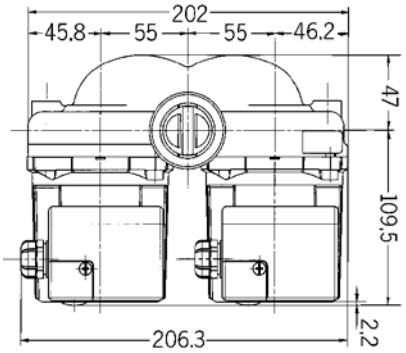

FEATURES

a) Electrical

- Single-phase 230 V, 50 Hz with capacitor integrated in the terminal box.

b) Installation

- Motor shaft always horizontal.

Connection with the network:

Depending on the model:

- Copper unions (R) to be welded, or brass unions to be screwed (RU brass) on copper piping,
- Steel unions to be screwed (RU) on galvanized steel piping.

c) Conditionnement

- With gaskets, without union.

d) Maintenance

- Standard exchange of the assembly.

OPTIONS & ACCESSORIES

- Unions.
- NP6 oval screw-on counter flanges to be screwed.
- Check valve.
- Isolating valves.

ORDER REFERENCE	Motor					Pump										
	speed selector position	Speed	P1	nominal amperage	capacitor capacity	H	P	L B.A.B.	L1	P1	H2	H1	mass	Ø G	connection by	standard assembly
		rpm	W	A	µF	mm	mm	mm	mm	mm	mm	mm	kg	mm		
NSB05-15B	–	1850	30	0,15	1,6 x 400 V	130	129	96	74	96	73	65	2	G1	R2022 or RU1521 brass	9h
NSB10-15B	1	1000	20	0,10	1,6 x 400 V	130	130	96	74	96	74	65	2	G1	R2022 or RU1521 brass	9h
	2	1600	32	0,15												
	3	2000	48	0,22												
NSB15-15B	1	1700	27	0,12	2 x 400 V	130	130	96	74	96	74	65	2	G1	R2022 or RU1521 brass	9h
	2	2200	39	0,18												
	3	2500	56	0,24												
NSB25-20B	1	1000	45	0,20	2,6 x 400 V	158	132	123	77	96	77	79	2,4	G1¼	R2022/2628 or RU2027 brass or CBOV3342	9h
	2	1450	66	0,29												
	3	1950	89	0,39		150*										
NSB30-25B	1	1150	70	0,32	2,6 x 400 V	180	145	96	77	109	77	90	2,8	G1½	RED2027 brass or RU2634 brass	12h
	2	1650	102	0,46												
	3	2300	114	0,50												
NSB-S 25-20	1	2100	65	0,35	3,7 x 400 V	158	191	110	–	163	90	79	3	G1¼	RU2027	12h
	2	2600	110	0,40												
	3	2790	105	0,50												
NSB-S 30-25	1	1750	105	0,55	5,0 x 400 V	180	191	110	–	163	90	90	3	G1½	RU2634	12h
	2	2354	140	0,70												
	3	2670	170	0,85												
NSB-S 40-25	1	1260	120	0,65	5,0 x 400 V	180	191	110	–	163	90	90	3,4	G1½	RED2027 or RU2634	12h
	2	1810	175	0,90												
	3	2390	200	1,00												
DSB33-25B	1	1400	70	0,32	3,5 x 400 V	(See drawing)								G1½	RED2027 or RU2634 brass	12h
	2	2000	101	0,46												
	3	2500	128	0,56												

* also available in H = 150 mm ØG 1¼

OPERATING RANGES

Flow rates of up to	**65 m³/h**
Manometric heads of up to	**9 m**
Max. operating pressure	**10 bar**
Max. ambient temperature	**+ 40°C**
Max. loop* temperature *	**+ 60°C**
Water hardness (TH)	**35°F**
DN ports	**DN 32 at 80**

* –10 à + 110°C for the circulating pump

SXS

CIRCULATING PUMPS FOR COLLECTIVE APPLICATIONS

Domestic hot water
Bronze housing
2 poles – 50 Hz

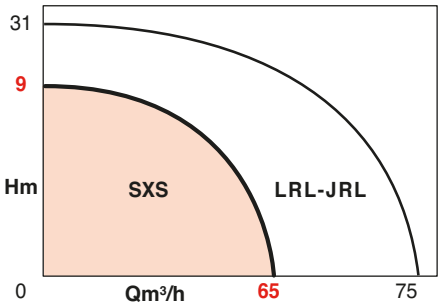

APPLICATIONS

This circulating pump is only suitable for drinking water.
Accelerated circulation in domestic hot water loops.
Instant hot water on demand.

- Collective housing
- Offices
- Local authorities
- Industries
- Hospitals
- Hotels, etc.

Certified ACS

BENEFITS

- **Reliable components**
- **Motor compartment insulated by a mechanical seal.**
- **Motor equipped with an integral (and automatic in SXS 32-35M) ipsothermal sensor**
- **Compact size.**
- **Easy to install - no alignment problems.**
- **Harmless materials in contact with water - maintains water quality.**
- **Very quiet operation as all rotating parts and components in contact with water are integrated into the motor cartridge.**
- **Choice of operating speeds (dual voltage, three-speed motor in three-phase).**
- **Automatic venting.**
- **Maintenance-free**

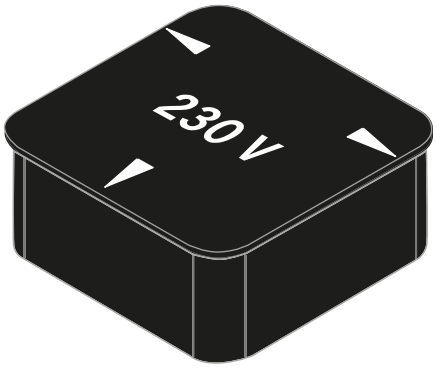

• 3-speed selector~230 V (accessory)



SXS

DESIGN

• Hydraulic part

- Housing with G2 pipe unions for SXS 32-35(M) and flanges equipped with pressure taps at the suction and discharge ends for other models.
- In-line ports, DN 40 to 80 - PN 10/16.

• Motor

- 2-pole, 3-speed motors (except for SXS 40-40M: 2-pole - 2 speed
- Wet runner.
- Integral ipsothermal sensor for exterior connection.
- Self-lubricating bearings.

Rotation speed:	see table
Winding:	Dual voltage with 3 speeds chosen via a plug-in selector connected to the voltage (400 V **three-phase** supplied as standard, 230 V three-phase as an option) 230 V **single-phase**
Frequency:	50 Hz
Insulation class:	H
Protection class:	IPX4D
Conformity :	CE Immunity EN 61000-6-2 Emission EN 61000-6-3

BASIC CONSTRUCTION

Main parts	Material
Pump housing	Bronze
Motor shaft	X 35 CrMo 17
Impeller	PPS Composite
Bearings	Resin-impregnated carbon

IDENTIFICATION

SXS 40-40 M

- SXS: single domestic hot water circulating pump
- ND of ports (mm)
- HMT (dm) at rated capacity
- If M: single-phase model

PRE-SELECTION NOMOGRAPH

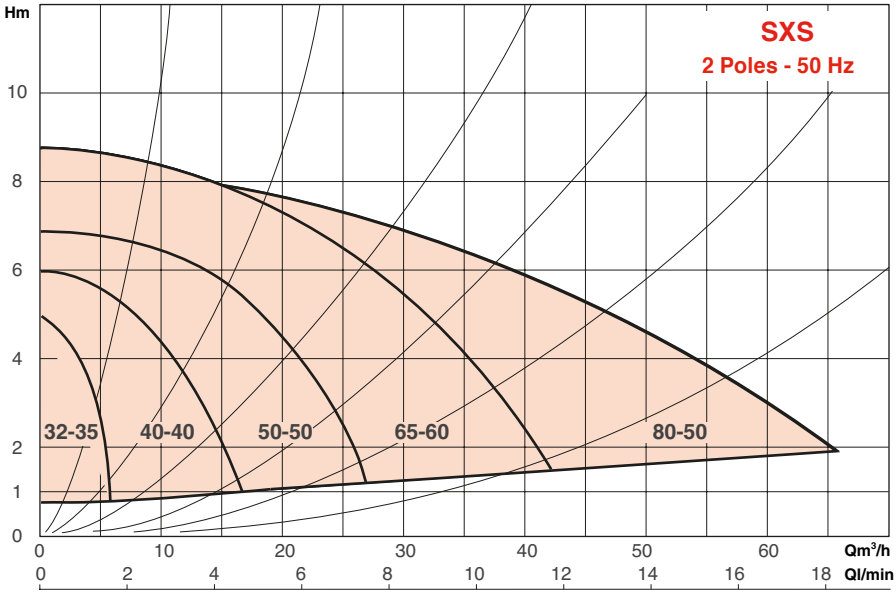

SECTIONAL DRAWING

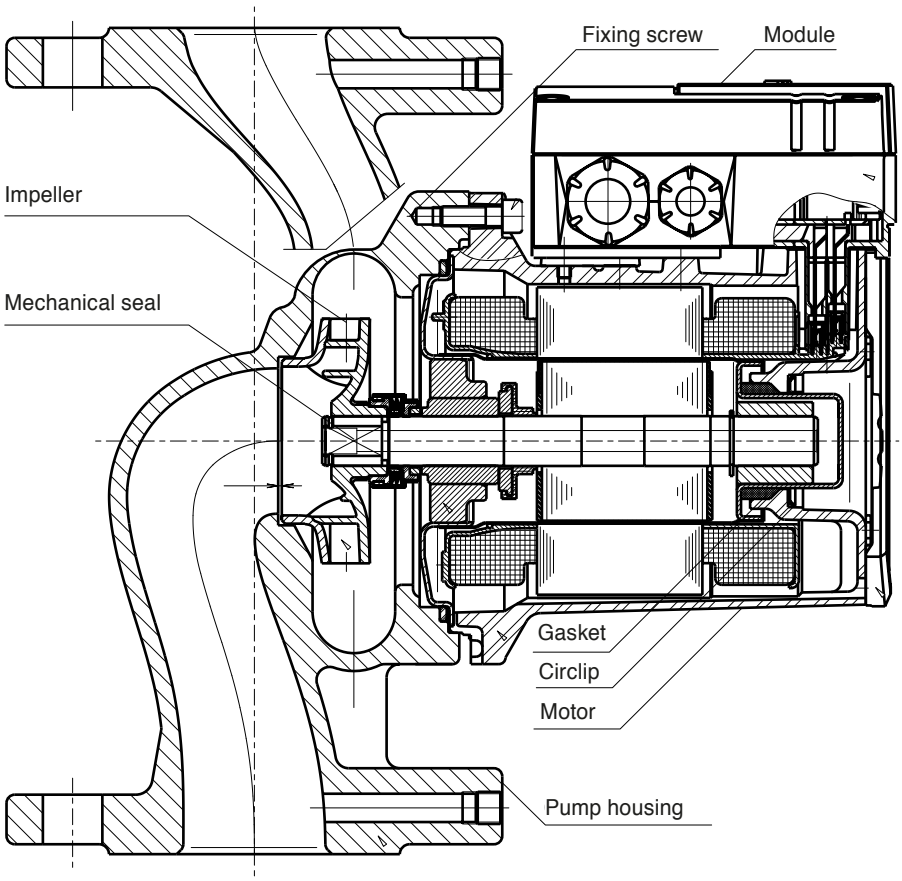

INSTALLATION PRINCIPLES

• Flooded head

Minimum flooded head (in m wc) at the circulating pump intake, according to the operating temperature.

	+ 40°C	+ 80°c	+110°c
DN 32	5 m	8 m	20 m
DN 40	5 m	8 m	20 m
DN 50	8 m	10 m	30 m
DN 65	8 m	10 m	30 m
DN 80	8 m	10 m	30 m

• Installation positions

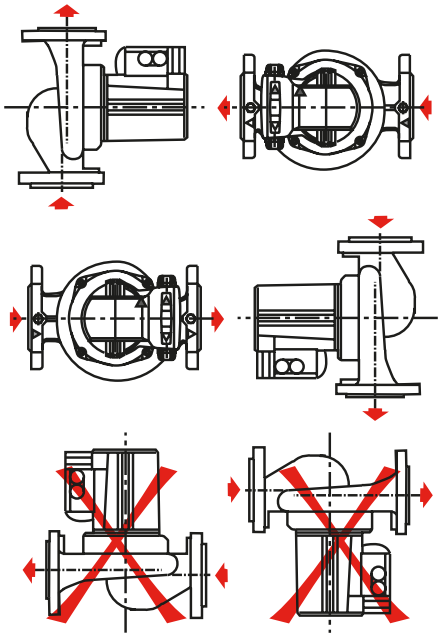

• Installation diagram

Circulating pump on return circuit of the domestic hot water distribution loop. (Max. temperature of circuit = 60°C – DTU (French Codes of Practice) standard

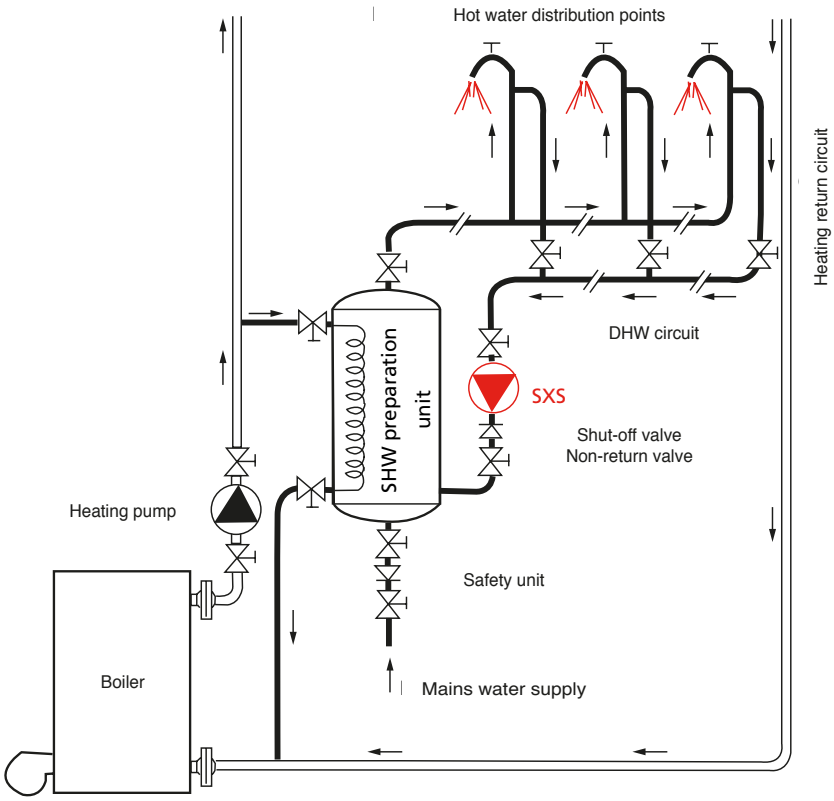

SPEED/VOLTAGE SELECTION

• Voltage selection

A plug-in selector is used to select the voltage:

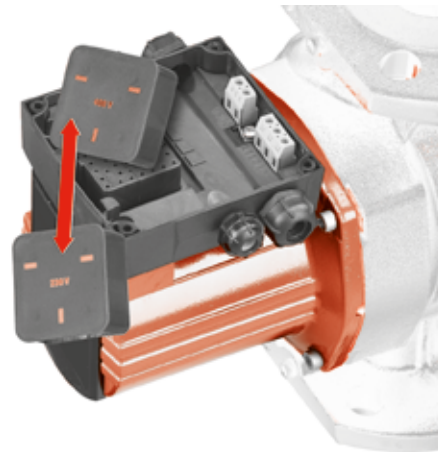

• Speed selection

The operating speed of the circulating pump is linked to the supply voltage of the motor.
The selected speed is shown in the upper window of the terminal box.
For SXS 32-35M, the speed is chosen by a rotating selector.



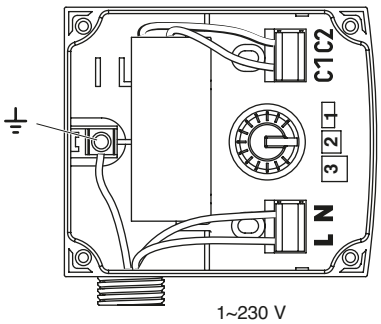

1~230 V

SXS

HYDRAULIC PERFORMANCE

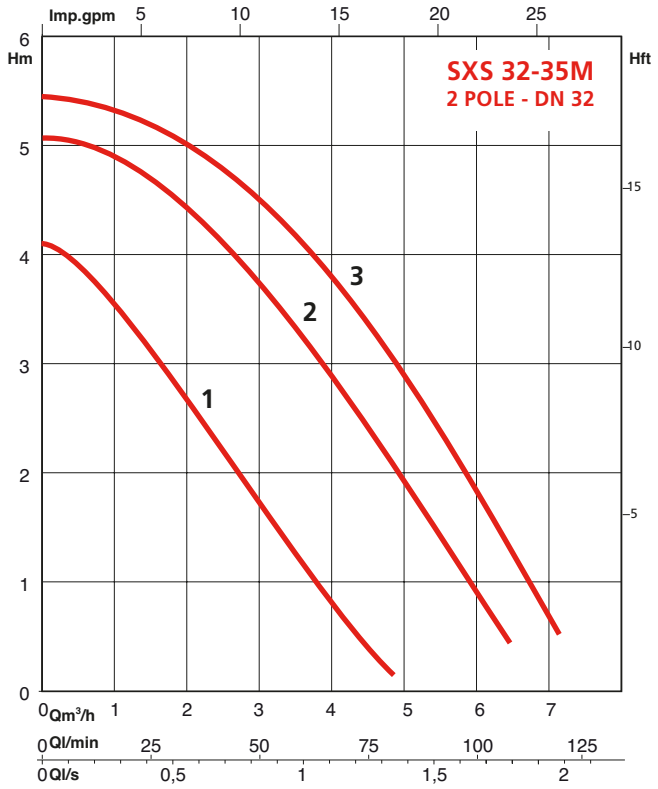

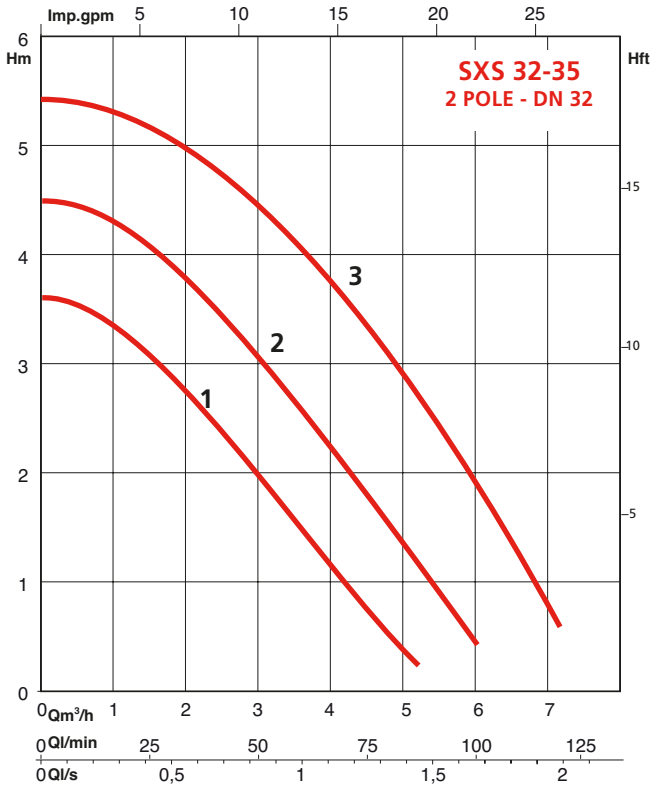

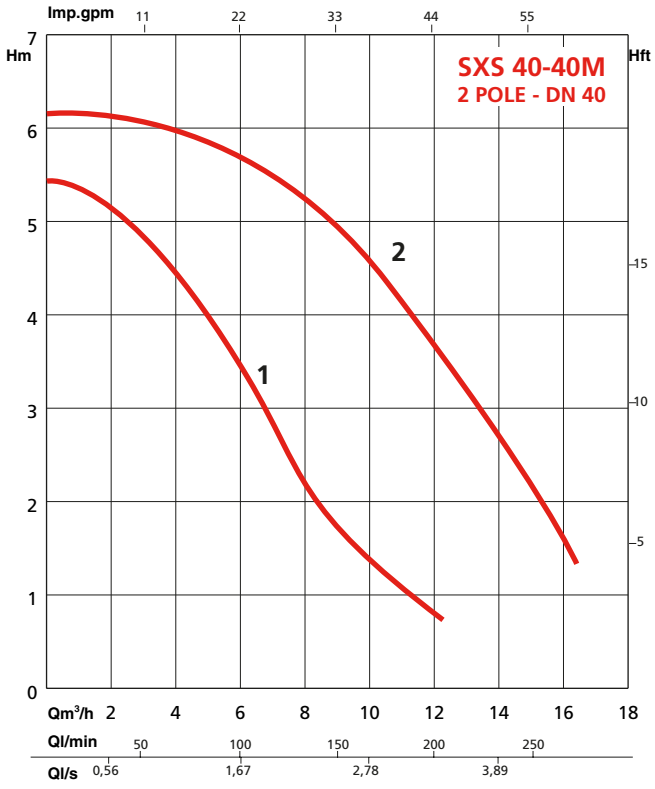

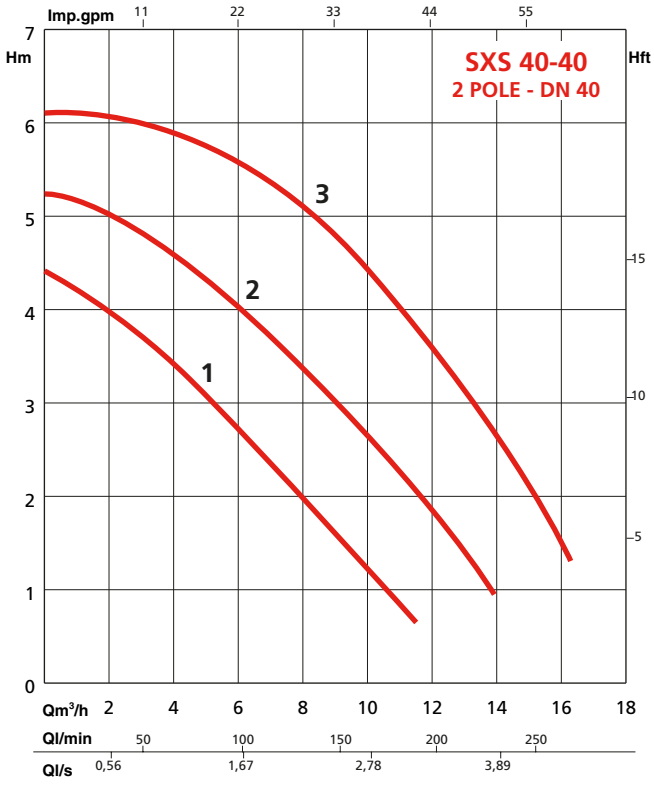

HYDRAULIC PERFORMANCE

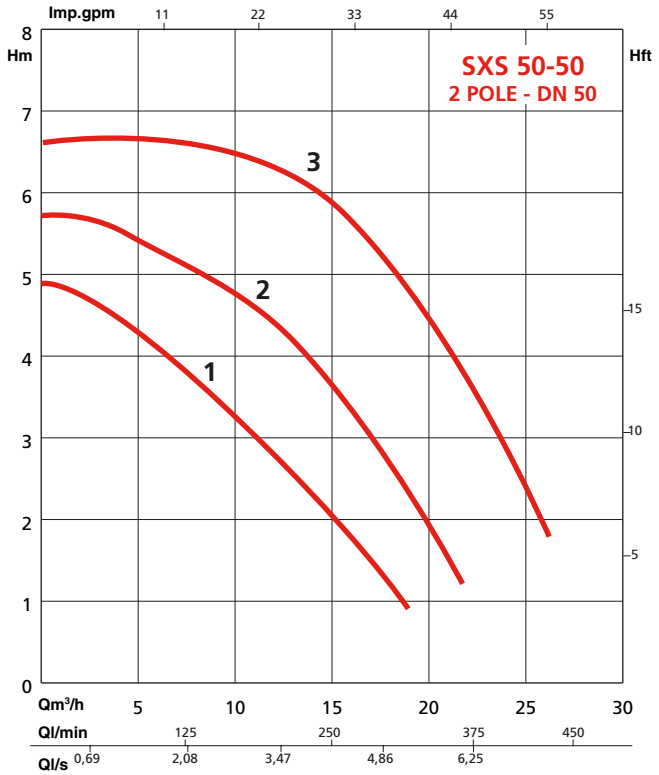

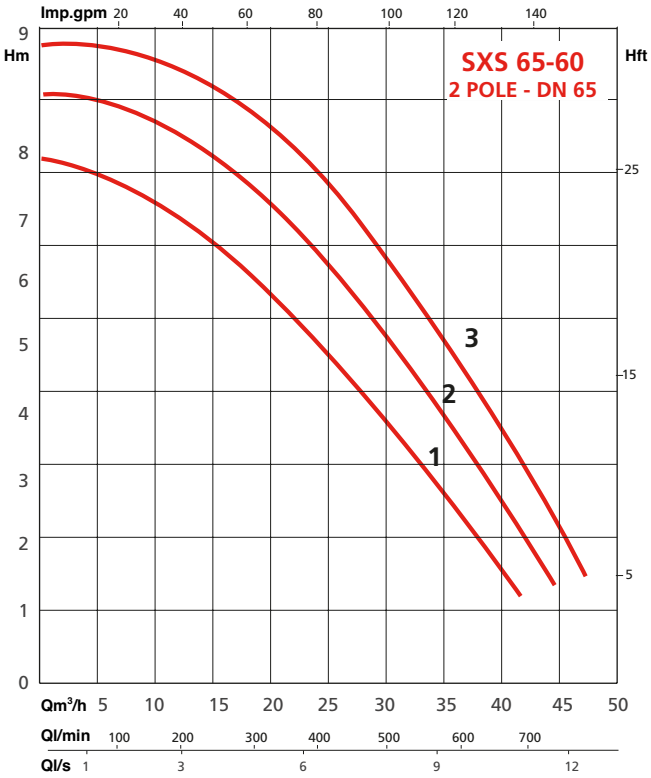

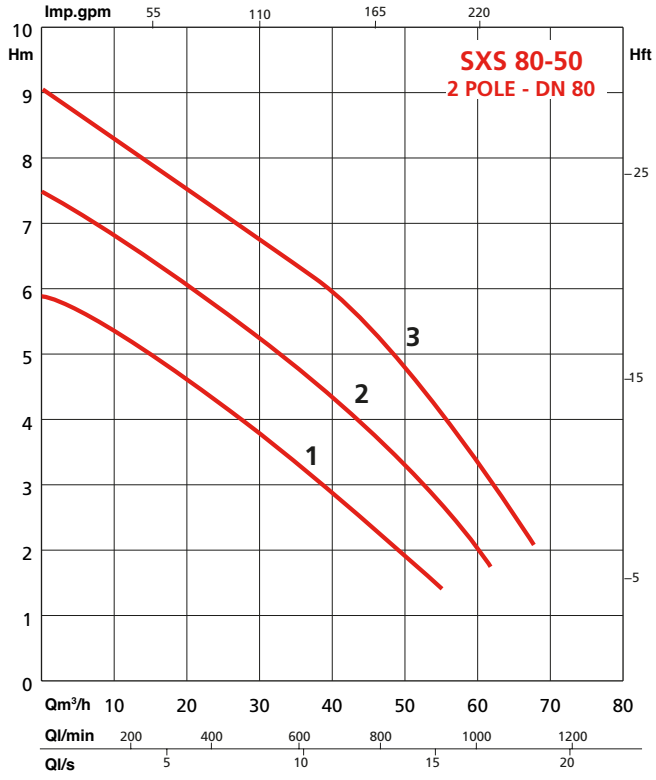

SXS

ELECTRICAL SPECIFICATIONS

ORDER REFERENCE	Capacitor	Selector position	Speed	Power	Network power cons.		Max. current			Motor unit	Ref.
			rpm	P2 max	P1Min	P1 Max	(A)				
	µF			W	W	W	1~230V	3~230V	3~400V		
SXS 32-35M	5 x 400	1	2100	90	70	110	0,56			BMSXS32-35M	2045568
		2	2500	90	100	145	0,72				
		3	2700	90	135	165	0,8				
SXS 32-35		1	2050	90	50	80		0,26	0,15	BMSXS32-35N	2095378
		2	2350	90	70	105		0,37	0,21		
		3	2700	90	105	155		1,72	0,42		
SXS 40-40M	8 x 400	1	2400	180	175	310	1,54			BMSXS40-40M	2065416
		2	2700	180	240	340	1,62				
SXS 40-40		1	2000	180	120	180		0,55	0,32	BMSXS40-40N	2065415
		2	2300	180	145	240		0,76	0,44		
		3	2700	180	195	320		1,22	0,7		
SXS 50-50		1	2000	350	240	390		1,19	0,69	BMSXS50-50N	2065417
		2	2300	350	280	520		1,6	0,92		
		3	2700	350	375	680		2,38	1,38		
SXS 65-60		1	2500	700	515	720		2,25	1,3	BMSXS65-60N	2065418
		2	2700	700	580	840		2,68	1,55		
		3	2850	700	760	1050		4,19	2,42		
SXS 80-50		1	2200	1100	865	940		2,91	1,68	BMSXS80-50N	2065419
		2	2500	1100	1055	1155		3,56	2,06		
		3	2800	1100	1290	1440		5,06	2,92		

DIMENSIONAL SPECIFICATIONS

Circulating pump with pipe unions

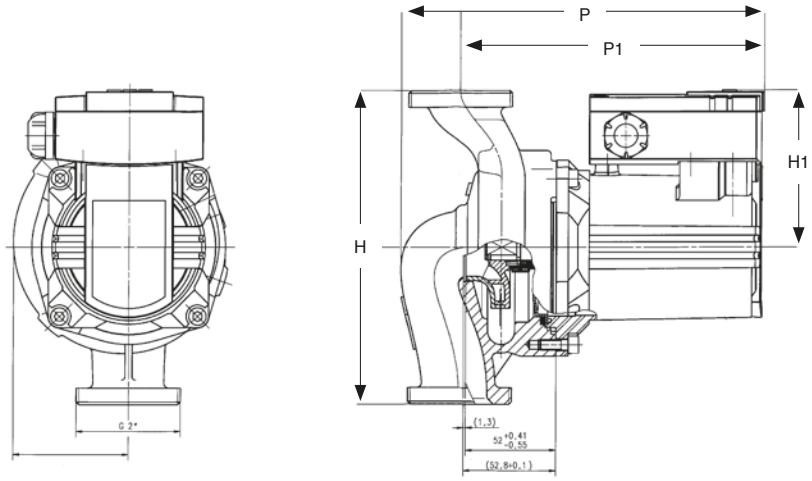

Circulating pump with flanges

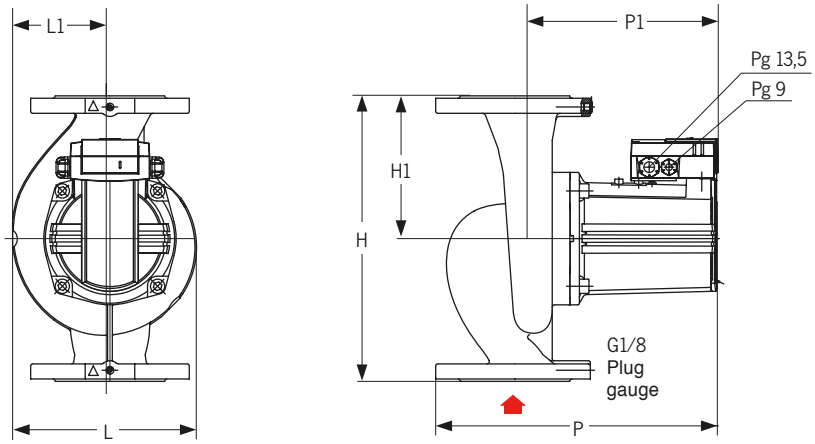

ORDER REFERENCE	Ports	L	H	P	L1	H1	P1	Mass
	ND	mm	mm	mm	mm	mm	mm	kg
SXS 32-35M	G2"	—	180	208	66	90	174	5,5
SXS 32-35	G2"	—	180	208	66	90	174	5,5
SXS 40-40M	40	155	250	269	80	125	194	11
SXS 40-40	40	155	250	269	80	125	194	11
SXS 50-50	50	174	280	308	91	140	225	16
SXS 65-60	65	218	340	349	118	170	256	25,5
SXS 80-50	80	244	360	358	135	180	258	30

PN 10 flanges - EN 1092-2

DN	D	c	g	Holes
	mm	mm	mm	nb x mm
40	150	110	88	4 x 18
50	165	125	102	4 x 18
65	185	145	122	4 x 18
80	200	160	138	8 x 18

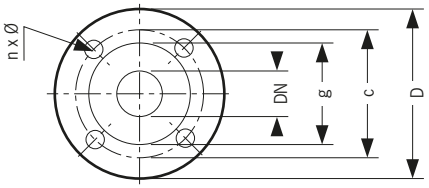

FEATURES

a) Electrical

- 230 V - 50 Hz single-phase with integral capacitor in the motor.
- 400 V or 230* V (50 Hz) three-phase

*For 3~230V, add a "speed selector": ref. 2040641- sold separately.

b) Fitting

- Directly onto pipework.
- Axis of motor always horizontal.
- Connection to the system via round, soldered-on counter-flanges (not supplied).

c) Packaging

- Models with pipe unions supplied with gaskets but without pipe unions.
- Models with flanges packaged with gaskets and bolts but without counter-flanges.

d) Maintenance

- Complete exchange of the motor unit or assembly.

RECOMMENDED ACCESSORIES

- Protective slave switch for motor.
- Non-return valve.
- Shut-off valves.
- Pressure taps kit.
- Anti-vibration sleeves.
- Round, soldered-on counter-flanges.

Differential pressure tap kit

Order ref.
KIT PRESS 6 or KIT PRESS 16



NOTES

NEC

SINGLE IN-LINE PUMPS
Domestic hot water
50 Hz

OPERATING LIMITS

Flow rates up to :	**6,5 m³/h**
Head of up to :	**7 m**
Max.operating pressure :	**10 bar**
Temperature range :	**–8° à +110°C**
for domestic hot water. :	**≤ +60°C***
ND of connections :	**25 ou 32****

* As per D.T.U.
** With EC 33 kit

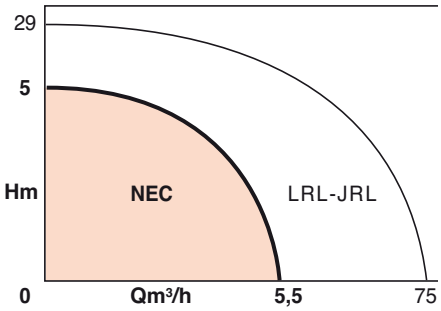

APPLICATIONS

Circulating pumps for :
- domestic hot water distribution systems,
- low-pressure heating systems,
- air conditioning systems,etc

And for all type of pumping for non- aggressive hot or cold water without abrasive particles in suspension.

ADVANTAGES

- **Preserves quality of water whateve the type of pipes thanks to the stainless steel casing .**
- **Single-piece design for direct fitting onto piping by means of 26-34 pipe unions (not supplied).**
- **Two fitting possibilities with adapters for ND 32.**
- **Small overall size.**
- **Simple to install,no problems with alignment.**
- **Reliable components.**
- **Corrosion-resistant mechanical seal.**
- **Extremely silent operation thanks to new motor bearings.**
- **Suitable for hard water (TH up to 50 °F).**

Certified ACS

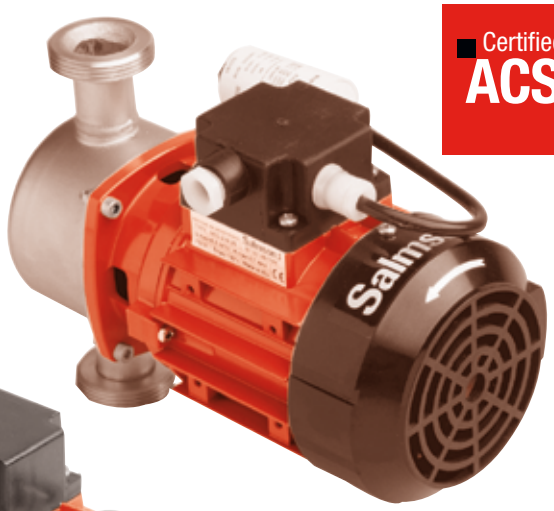

• NEC 1/2 for 3-phase

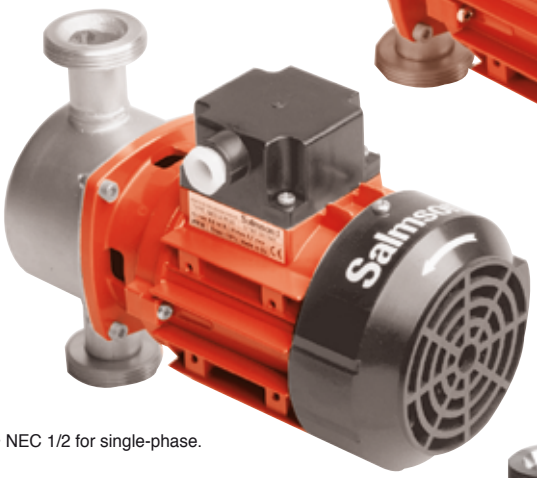

• NEC 1/2 for single-phase.



• NEC single-phase - ND25 with NEC 33 kit for ND 32



• NEC 33 adapter kit

NEC

DESIGN

• Hydraulic part

- Single cell,centrifugal.
- Volute casing body with “in-line”suction-discharge ports for direct fitting onto piping.
- Tight sealing on shaft feed-through ensured by self-lubricated,maintenance-free mechanical seal.

• Motor

- Ventilated at end of extended stainless steel shaft.
- High starting torque.
- Bearings greased for whole motor service life.
- Silent running.

Rotational speed	
NEC 1 :	1450 rpm
NEC 2 :	2850 rpm
Winding	single-phase : 230 V
	3-phase : 230-400 V
Frequency :	50 Hz
Insulation class :	155 (F)
Protection index :	IP 44 (motor)
	IP 54 (terminal box)

STANDARD CONSTRUCTION

Main parts	Material
Pump casing	Stainless steel 304L
Motor casing	aluminium
Motor shaft	Stainless steel X6 Cr Ni Mo 17.12.2
Impeller	Noryl GFN1630V
Mechanical seal	Ceramic/graphite/E.P.
Casing gasket	Ethylene - Propylene

DRAWING - SCHEMATIC SECTIONAL VIEW

• NEC 1/2-M/T-25

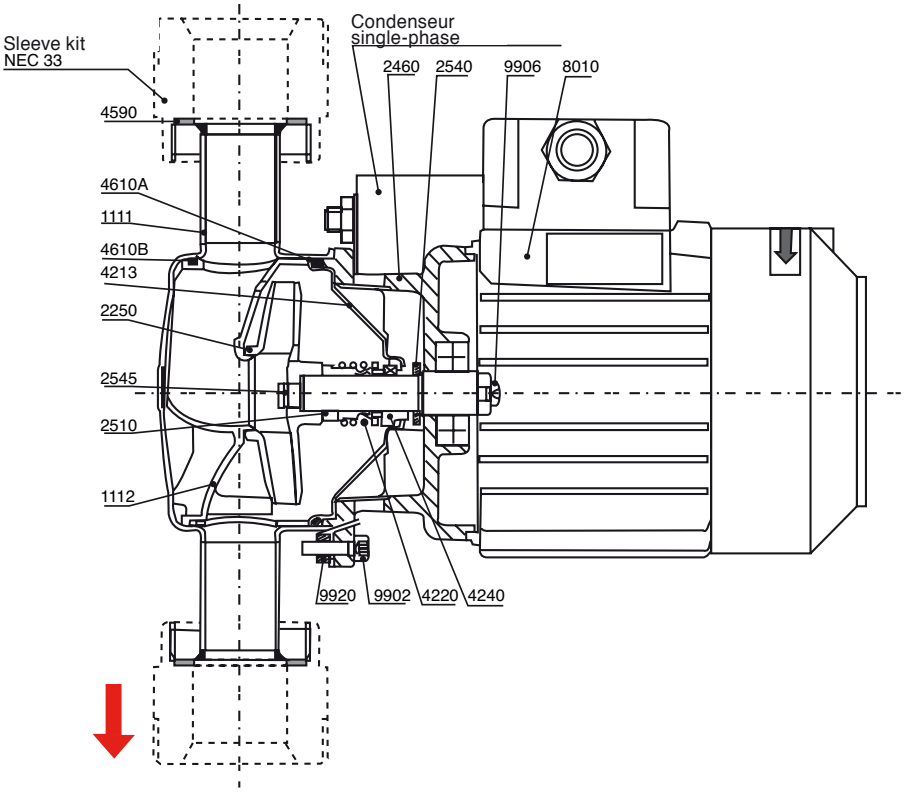

- 1111H - Pump casing
- 1112H - Internal volute casing
- 2460H - Spacer sleeve
- 2510H - Mechanical seal thrust washer
- 2540H - Deflector
- 2545H - Circlip
- 2250H - Impeller
- 4213H - Mechanical seal carrier
- 4220H - Rotating seal ring | mechanical seal
- 4240H - Stationary seal ring | mechanical seal
- 4590H - Flat gasket
- 4610A - O-ring
- 4610B - O-ring
- 6545H - Shaft circlip
  8010H - Motor with extended shaft
- 9902H - Socket head screw
  - 9906 - Hexagonal head screw
  - 9920 - Special nut

(•) Recommended spare parts

FITTING POSITION

Standard supply

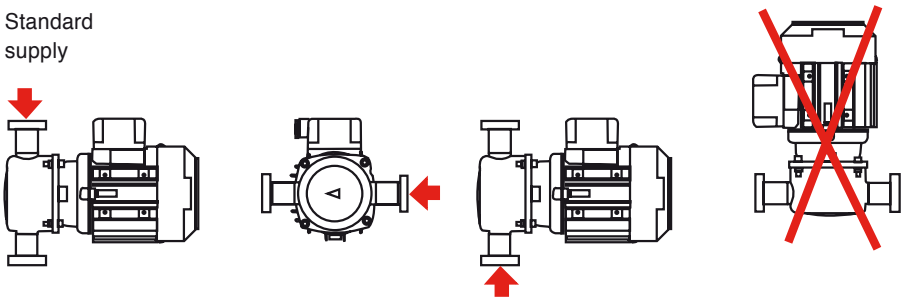

HYDRAULIC PERFORMANCE

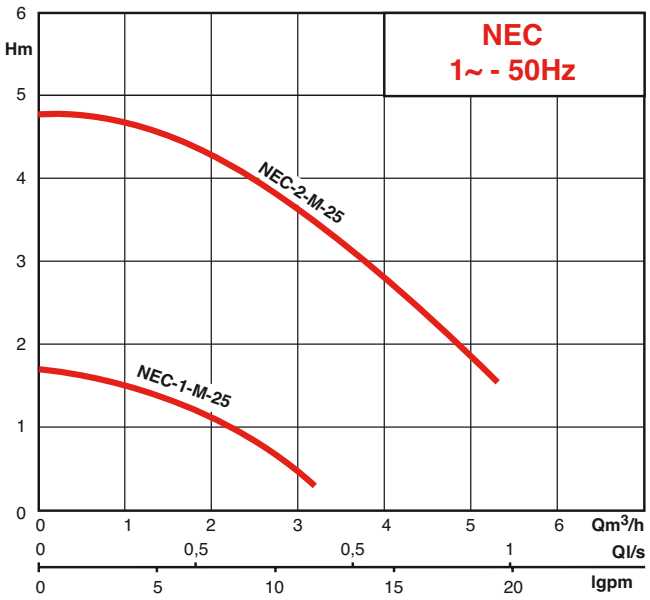

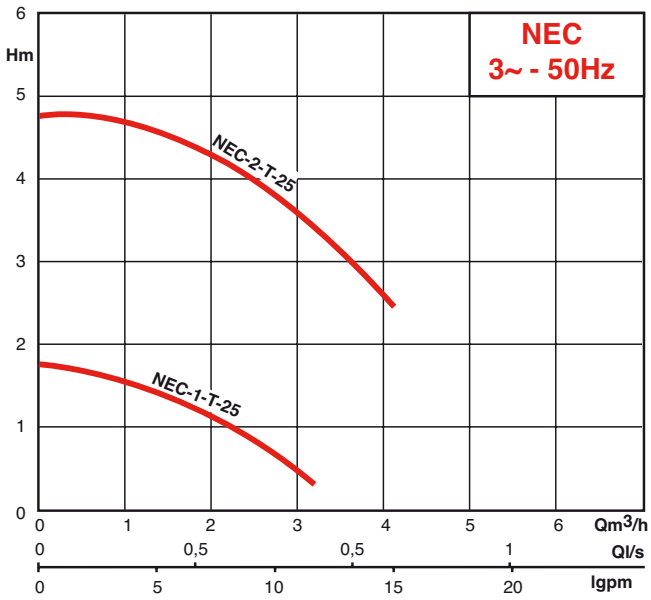

INSTALLATION DIAGRAM

• Pump on return system of domestic hot water (D W) distribution loop

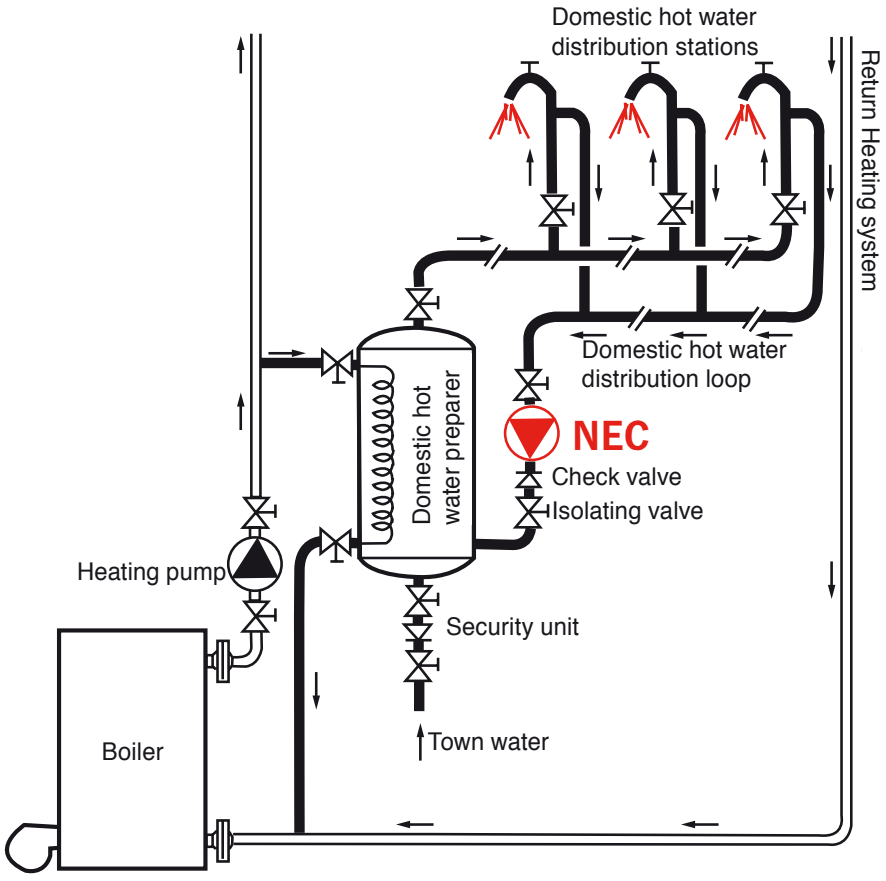

NEC

ELECTRICAL DATA AND DIMENSIONS

• **NEC SINGLE-PHASE**

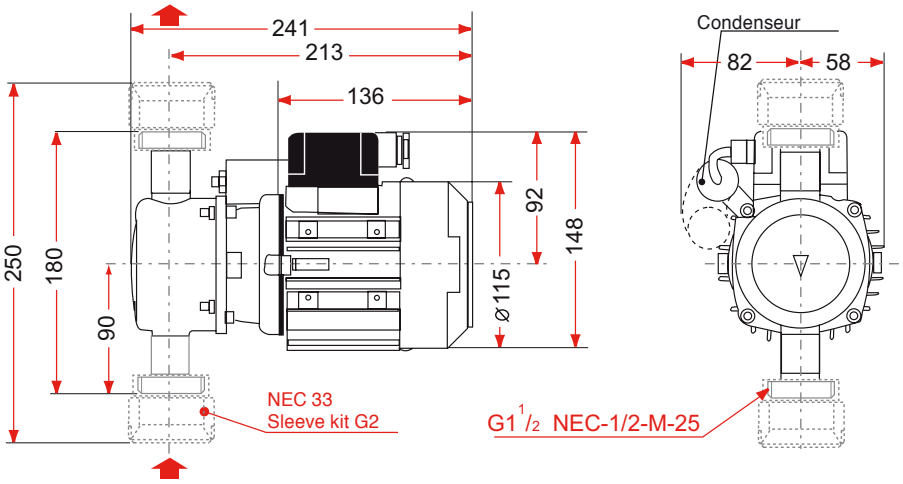

• **NEC 3-PHASE**

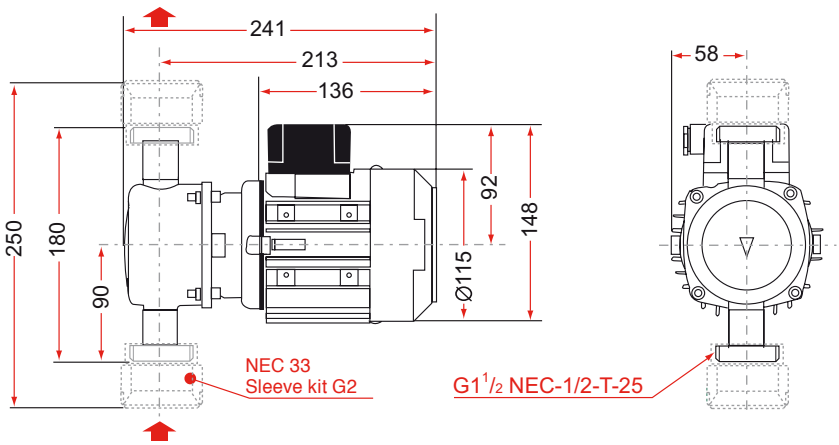

ORDER REFERENCE	Motor							Pump
	P2	P1	Current in A for				Sound Pressure Level	
		max.	Single-ph	3-phase	3-phase	Capa		Mass
	W	W	230 V	230 V	400 V	Mf	dBSPL	kg
NEC-1-T-25	090	067	—	0,50	0,29	—	34,5	4,5
NEC-1-M-25	100	155	1,05	—	—	4,0	40,0	5,5
NEC-2-T-25	120	215	—	0,66	0,38	—	43,5	4,5
NEC-2-M-25	180	240	1,15	—	—	6,3	44,5	5,5

SPECIFIC FEATURES

a) Electrical features
- Versions: 3-phase 230-400 V (T) or single-phase 230 V (M) - 50 Hz.
- Motor protection by circuit breaker.

b) Fitting
- Direct fitting on piping.
- Motor centreline always horizontal.
- Connection to installation by pipe unions (not supplied).

c) Packaging
- Supplied as standard domestic hot water version with suction port on top and discharge on bottom.
- With two gaskets without pipe unions.

d) Maintenance
- omplete replacement of the set or repair: see recommended spare parts (•) liable to wear.

ACCESSORIES

- Pipe unions.
- Adapters: NEC 33 kit (for replacement of NEC 33.
- Circuit breaker for motor protection.
- Check valves.
- Isolating valves.

Equipments

Control devices

Acson	**1271**
Acson vario	**1273**
Floats	**1277**
IPAE	**1281**
YN 1200	**1283**
MS lift	**1285**
YN 3000	**1287**
SC lift	**1291**
CC-HVAC	**1295**
MGP	**1303**

Warning device

Alarmson	**1309**

Tanks

Tanks	**1311**

Equipment submersible pumps

Immerson Cables	**1317**

RANGE OF USE

Maximum flow rates:	**10 m³/h**
Max. operating pressure:	**10 bar**
Cut-in pressure:	**1,5 to 3 bar**
Range of temperatures:	**0° to +60°C**
ND (threaded openings):	**G1**
Maximum current:	**10 A**
Protection:	**IP 65**

ACSON

AUTOMATIC CONTROL DEVICE

For pumps for domestic use 50 Hz - 60 Hz

BENEFITS

• Multi-purpose
- Automatic on/off.
- Protection against running dry.
- Protection against water hammer.

• Simple
- Each function is identified by indicator lights and a manometer.

• Flexible
- Start-up pressure adjustable depending on the mains water pressure available.

• Reliable
- Internal components resist corrosion.

DESIGN

- The ACSON is a hydraulic system designed for automating and protecting pumps.
- The start-up pressure of the pump is adjustable from 1.5 to 3 bars.
- The pressure can be monitored by a manometer.
- Can be mounted left-hand or right-hand.
- A non-return valve is provided as standard.
- Supply voltage: monophase 220-240V.

BASIC CONSTRUCTION

Main components	Material
Body	Composite material
Membrane	Natural rubber *
Spring	Cadmium steel
Non-return valve (inlet	Composite material
Joints	Nitrile rubber

* Food quality.

APPLICATIONS

The automatic protection, control and management of the operation of a pump in a domestic water supply system.

ACSON is recommended for all installations for domestic water supply, watering and washing.
Use with AQUASON, SPRINGSON, HYDROSON and MULTi-H pumps (including Multi-H 316L).

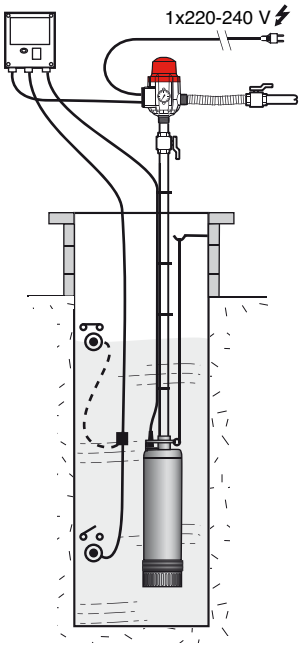

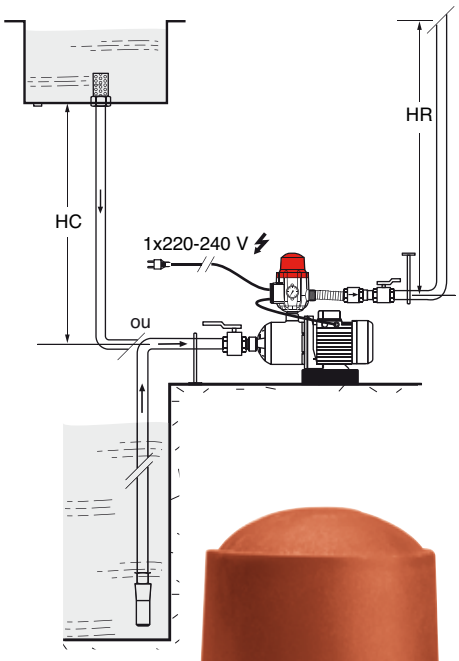



• SPRINGSON PAC (fitted with an ACSON device)



• ACSON

ACSON

METHOD OF OPERATION

Automatic device

When a tap is opened, the pressure in the installation falls and the pump instantly starts up at a factory-set threshold of 1.5 bars. This threshold can be increased to 3 bars on site depending on the mains water pressure (or HR, HC). The pump continues to operate as long as a minimum flow rate exists in the system.

"Anti water-hammer" device

When the tap is turned off, the pump stops automatically after a pause of 3 to 5 seconds. This pause prevents an air-block from arising.

Protection from running dry

The automatic device protects the pump from running dry, by stopping the motor. This halt is indicated by the "ALARM" light coming on. The pump has to be restarted manually with the "RESET" button. Even with the use of the automatic device, the characteristics of the pump are preserved intact. The self-priming function is retained by keeping the "RESET" button held down during priming.

DESCRIPTION

1 - Intake port with built-in non-return valve
2 - Output port
3 - Control manometer (0 - 10 bars)
Left-hand and right-hand fitting
4 - Electrical control box with electronic circuitry including protection against running dry by stopping the motor, and pump and system connection box
5 - Hydraulic chamber with membrane
6 - Pressure compensation chamber with spring
7 - Screw to adjust the start-up pressure of the pump
8 - Reset button (RESET)
9 - Voltage indicator light (POWER)
10 - Indicator light that the pump is operating (ON)
11 - Indicator light that the safety system is activated (ALARM)
12 - Bottom casing
13 - Manometer spindle

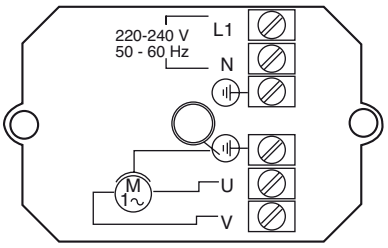

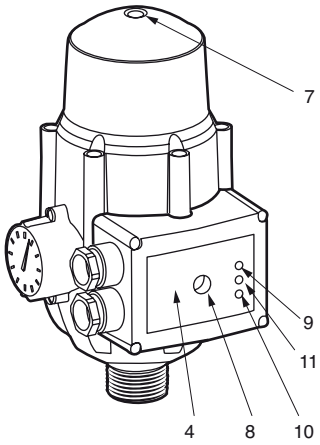

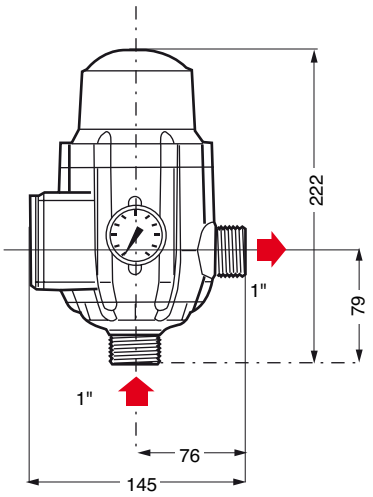

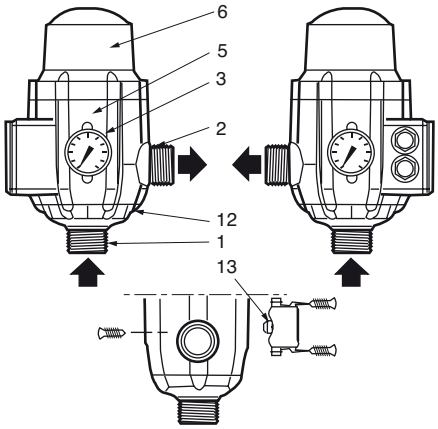

ACSON AND THE PUMPS

The ACSON is designed as an automatic control for surface pumps (SPRINGSON, HYDROSON, MULTi-H, etc.) and sump pumps (AQUASON) pumping clean water.

It can be connected either directly on the pump outlet (if DNR = 1"), or on rigid pipework between the pump and the ACSON.

To avoid any strain on the body of the ACSON you are advised to fit flexible piping to the outlet.

The ACSON can be used with a pump connected to the mains water supply without any running-dry protection (mains pressure less than or equal to 1 bar), as this forms part of the automatic device.
For the same raison, a non-return valve is not needed between the pump outlet and the automatic device.

SPECIAL FEATURES

a) Electrical

- The ACSON is intended to operate on a monophase 220-240 V - 50 Hz or 60 Hz current (TRI current is possible, please enquire).
- Connections to the terminal box by cable screw.

b) Mounting

- Must be vertical.
- Connect directly to the output port of the pump or on rigid pipework between the pump and the ACSON.

c) Packaging

- Delivered in a carton with fitting instructions.

d) Maintenance

- Automatic exchange of any device found to be faulty during its period of guarantee.

OPTIONAL ACSON KIT containing:

- An electrical cable for connexion between the motor and the automatic device (length 0.6 m).
- An electrical cable with standard plug (2 pin + earth) for connection to the mains (length 1.5 m).
- A flexible tube ØG1 to join the outlet of the automatic device to the water supply to the installation.

Order no	Reference no
Kit acson	4046703

RANGE OF USE

Maximum flow rate:	**15 m³/h**
Max. operating pressure:	**16 bars**
Operating pressure:	**1,5 to 12 bars**
Temperature of the fluid:	**0 to +40°C**
Maximum ambient temperature:	**+50°C**
ND (threaded openings):	**G1''1/4**
maximum current:	**10 A***
Protection:	**IP 55**

* Version VST 10A

ACSON VARIO

VARIABLE SPEED CONTROL AND PROTECTION DEVICE

For domestic use
50 Hz - 60 Hz

BENEFITS

MULTI-PURPOSE
- **Maintains pressure**
- **Automatic on/off**
- **Protection against running dry**

SIMPLE
- **Screen to display settings**
- **Fast, intuitive menu**

ECOLOGICAL
- **Saves water**
- **Saves energy**

RELIABLE
- **Not susceptible to corrosion**
- **Frost-protected**

COMPACT
- **Built-in pressure sensor**

APPLICATIONS

Automatic control device using electronic speed variation and protection for of surface or underwater pump for domestic use.

Pressurising and distributing clean water with no abrasive particles in suspension.

Domestic installations:
- Individual homes or small developments
- Watering and washing

Recommended for managing pumps in the following ranges:
- Hydroson
- MULTi-H
- MUH
- Aquason
- Immerson D
- Springson

EVS









ACSON VARIO

PUMP ADAPTABILITY

The Acson-Vario can be used with all models of centrifugal pumps for clean water, surface pumps (MUH, MULTi-H, Hydroson, Jetson, Springson) and submersibles (Aquason, Immerson D4), on condition that the maximum current (A) of the motor is within the limits of use of the device.

It can be fitted directly onto the pump (1'' threaded openings) or the outflow pipe. You are always advised to install a membrane tank, even a small one, to reduce the number of times the pump starts up. If the outflow pipe is not supported, you are advised to use flexible pipework.

The Acson-Vario can also be used with installations connected to the mains supply. The mains system will ensure against running dry.

METHOD OF OPERATION

The Acson-Vario is a protection and control device intended for domestic pressurised water installations. The system includes a speed control (frequency converter) driven by a dedicated program, and a pressure sensor. The controller controls the speed of the motor while the sensor measures the pressure within the installation and transmits a signal to the controller to adapt the speed according to need.
The Acson-Vario maintains a constant pressure in the installation according to the actual water requirement by regulating the speed of rotation.
The operating parameters are adjusted simply and intuitively through the settings displayed on the built-in LCD screen.

The Acson-Vario handles the turning on and off of the pump, protects the pump against running dry and, if ambient temperature is particularly low, a temperature sensor protects the installation from freezing by starting the pump temporarily even if this has not been requested.
The Acson-Vario also includes protection against peaks and drops in voltage. As well as giving optimum performance, this type of equipment considerably reduces energy and water consumption, offers comfort of use and significantly reduces noise from the pump.

IDENTIFICATION

ACSON-VARIO VS M 9A

Name of the range

Variable speed

Pump with 230 V monophase motor

Maximum current of the pump motor

INSTALLATION DIAGRAM

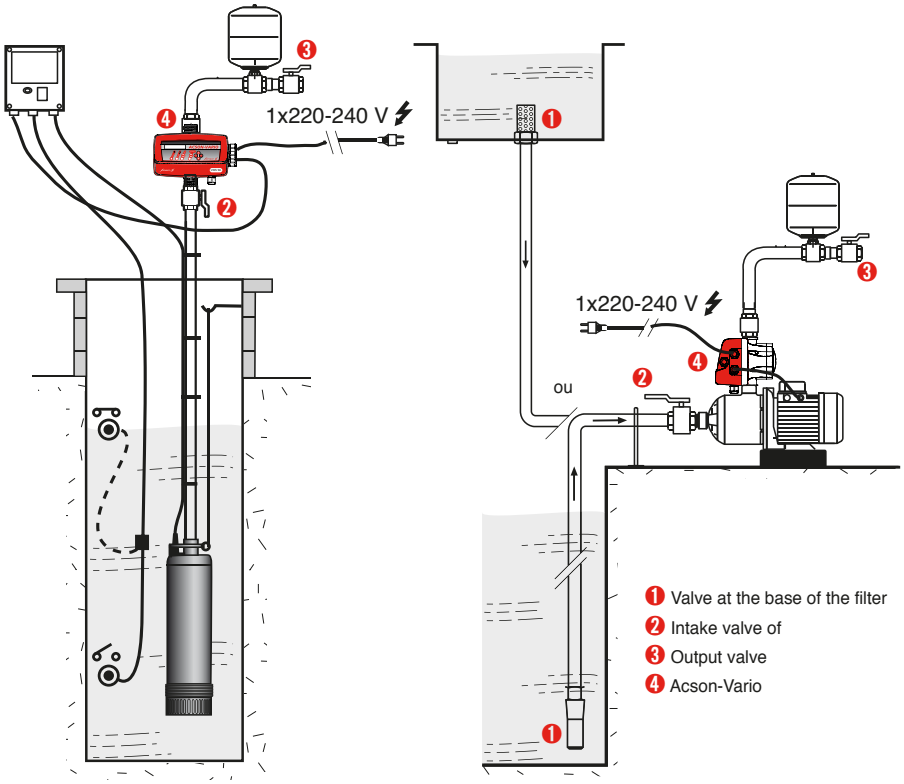

ACSON VARIO

ACSON-VARIO

- Acson-Vario VSM 05A
  Monophase supply 230 V ; 50 Hz
  Monophase pump P2 max. 0.75 kW
  maximum current 5 A

- Acson-Vario VSM 09A
  Monophase supply 230 V ; 50 Hz
  Monophase pump P2 max. 1.85 kW
  Intensité maxi 9 A

- Acson-Vario VST 10A
  Monophase supply 230 V ; 50 Hz
  Three-phase pump P2 max. 1.85 kW
  Intensité maxi 10 A

- Two devices can operate in master-slave, cascade and alternating mode.

DESCRIPTION

- Mains voltage ~1x230 V
- Frequency 50/60 Hz
- Max. electrical absorption 10 A (~3x230 V)
- Maximum electrical absorption in the event of peaks 15 A
- Maximum operating pressure 15 bars
- Pressure adjustable from 1 to 12 bars
- Protection IP55
- Maximum temperature of the fluid +40 °C
- Maximum ambient temperature +50 °C
- Maximum flow rate 15 m^3/h
- Threaded output/intake openings, 1¼"
- Protection against surge voltage
- Protection against the running dry
- Built-in pressure sensor

FUNCTIONS OF THE SOFTWARE

- **ART (automatic restart):**
  If the system is closed down by the device for protection against running dry, this function runs a program which checks that the water supply has returned and restarts normal operations.

- **APP (Adaptability to peaks of pressure):**
  This is a regular analysis of the installation which checks the variability of the water supply so as to reduce peaks in the pressure. This means that Acson-Vario can be installed in systems whether or not they are fitted with a membrane tank.

- **AIS (Protection against frost):**
  A temperature sensor automatically starts up the device even if it has not actually been requested, if the temperature of the fluid is below 5 °C, so as to prevent the pump from freezing.

- **Automatic reprograming:**
  The system has a non-volatile memory. In the event of a power cut, when the supply returns, the system is ready to operate and there is no need to reprogram the Acson-Vario.

- **Operating memory:**
  The system is fitted with a non-volatile memory which creates a register to give information on:
  - the number of hours of use;
  - the number of starts;
  - the number and type of anomalies.

DESCRIPTION OF THE DEVICE



Description

1. 1¼" output port
2. LCD screen
3. LED status/alarm indicators
4. Set-up buttons
5. 1¼" intake port
6. Connection boxes
   - Supply
   - Pump cable
   - Float switch against the running dry

ACSON VARIO

DIMENSIONS AND ELECTRICAL FEATURES

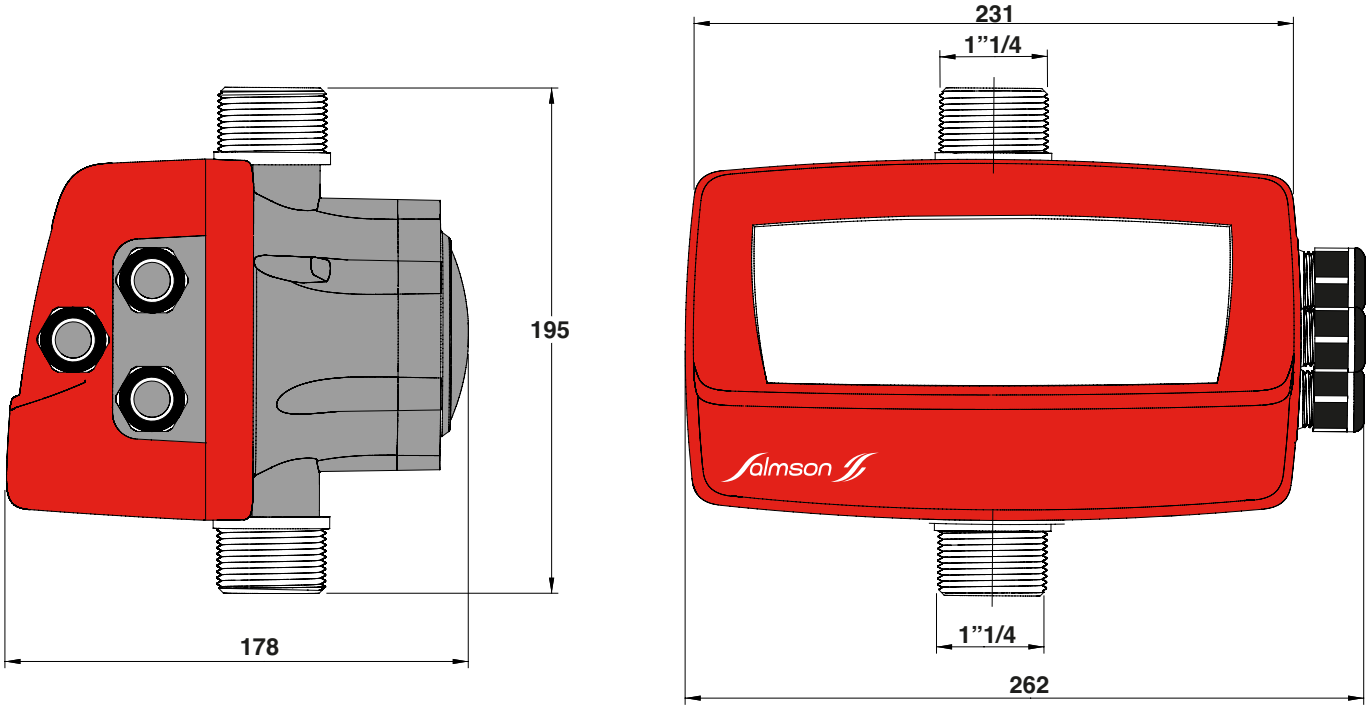

Description of the item	Acson-Vario	Centrifuge pump		
	Supply (input)	Supply (output)	Maximum current (A)	Max. power P2 (kW)
Acson-Vario VSM 05A	Single-phase 230 V	Single-phase 230 V	5	0,75
Acson-Vario VSM 9A	Single-phase 230 V	Single-phase 230 V	9	1,85
Acson-Vario VST 10A	Single-phase 230 V	Tree-phase 230 V	10	1,85

SPECIAL FEATURES

a) Electrical
- Voltage of single-phase supply 230 V
- Frequency 50/60 Hz

b) Fitting
- Must be installed vertically
- Flexible or rigid pipework
- Installation on the output port of the pump or as close as possible.

c) Packaging
- With cables and electric plug
- With ends of electrical cables stripped ready for connection to the pump control box
- Version VST 10A with electrical cables ready for the connection to another Acson-Vario, for use in master-slave mode
- Complete in carton with user and maintenance manual.

d) Options and accessories recommended
- Membrane tank
- Butterfly valve
- Non-return valve
- Master-slave connection kit

FLOATS

NIVOSTABLE 430

OPERATING LIMITS

Max. temperature :	**+5 to 60°C**
Max. current :	**10 A**
Protection index :	**IP68**
Switch insulation class :	**Class II**

ADVANTAGES

- **Stable, reliable level.**
- **Micro-switch control.**
- **Emptying or filling with the same float.**
- **Ideal for muddy water.**

CHARACTERISTICS

Descriptions

NIVO430-1X10	10 m Cable	1,58 Kg
NIVO430-1X20	20 m Cable	2,31 Kg

Material :	PVC
Number of wires :	3 x 1 mm2
Polypropylene cable :	7,5 mm + - 0,3 mm
Float size mm :	210 x Ø 100
Float thickness :	6 mm
Number of cycles :	50 000
Displacement radius :	4 cm
Min. sump dimensions :	0,5 x 0,5 m
Switch compliance :	CEE
Current :	250 V max.
Max. motor load for switch :	10A
Weight of float :	0,8 Kg
Depth of immersion :	20 m max.

FEATURES

a) Installation

Emptying or filling according to choice of wires.

b) Packaging

Individual packaging.

PRINCIPLE OF OPERATION

- Ballasted float level control.
- Switchover at chosen level.
- 1 float for each level of detection.
- On control per pump, off, alarm.



INSTALLATION DIAGRAM

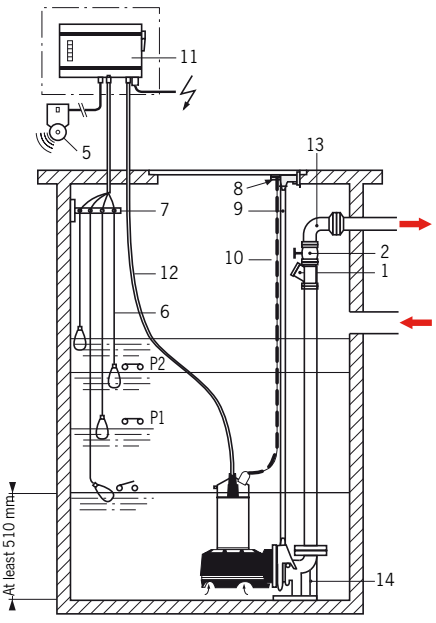

FLOATS

INTERAFLOT 410

OPERATING LIMITS

Max. temperature:	**85°C**
Max. operating pressure:	**3,5 bar**
Max. motor intensity:	**6 A**
Protection index :	**IP68**
Switch insulation :	**Classe II**
Density of liquid :	**0.7 to 1.1**

PRINCIPLE OF OPERATION

- Stainless steel float switch with counterweight and standard cable.
- Can be used to provide two levels of control, turn one pump on/off, or provide a safety level.

ADVANTAGES

- **Meets requirements for drinking water with ACS approval,**
- **Operates in emptying or filling mode.**
- **Counterweight adjustable to provide the travel required.**
- **Not sensitive to disturbance on the surface of the liquid.**



INSTALLATION DIAGRAM

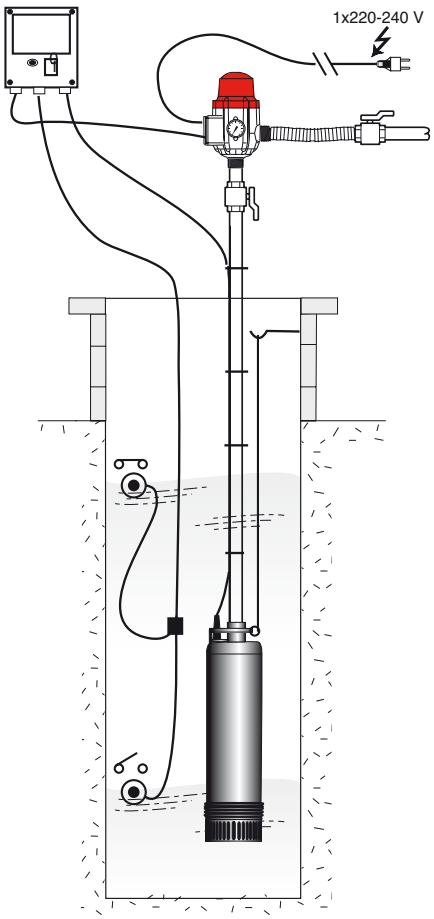

CHARACTERISTICS

Description

INTERAFLOT 410 ACS

Material :	Float	Polypropylène
	Counterweight	Stainless steel 316L
Cable :		3x1mm2 EPDM (ACS)
Length of cable		10 m
Diameter of the float		95 mm
Differential angle		165°
Maximum voltage		250V
Maximum motor load		6A
Contact		changeover contact

FEATURES

a) Installation

Emptying or filling according to choice of wires

b) Packaging

Individual packaging.

FLOATS

EUROFLOT 421-10

OPERATING LIMITS

Max. temperature :	**-20 to 80°C**
Max. current:	**10A**
Protection index :	**IP55**

ADVANTAGES

- **Control and protection against dry running.**
- **Float and counter weight position according to utilisation.**
- **Operates in emptying or filling mode depending on position of counterweight/ float.**

CHARACTERISTICS

Designations

INTERAFLOT 421-10

Material of casing :	Composite
Nylon wire :	Ø 2,9 mm, 10 m long
Float :	0,40 Kg
Number of cycles :	6 000
Polypropylene float :	Ø 127 mm
Displacement radius:	100 mm
Switch compliance :	NFEN 60917
Three pole contact :	400 V max.
Max. motor load for switch :	10 A
Weight of the kit with counterweight:	1,5 Kg

FEATURES

a) Installation

Emptying or filling according to choice of wires.

b) Packaging

Individual packaging.

PRINCIPLE OF OPERATION

- Switch with counterweighted float and adjustable level cable
- Operation: on/off operation of one pump.
- Control levels adjusted by altering the length of the cable and the counterweight.



INSTALLATION DIAGRAM

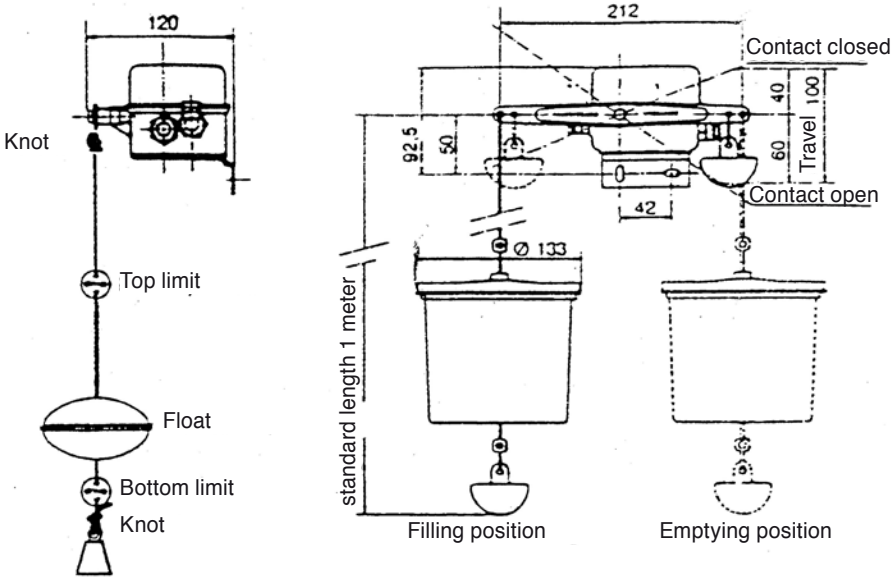

FLOATS

EUROFLOT 423 VR

OPERATING LIMITS

Max. temperature :	**+5 to 80°C**
Max. current :	**10A**
Protection index :	**IP68**
Switch insulation class :	**Class II**

PRINCIPLE OF OPERATION

- Switch with counterweighted float.
- Manages two levels of control: on one pump On/Off.
- Control levels adjusted by altering length of cable and counterweight.

ADVANTAGES

- **Dual control of a single pump.**
- **Counterweight can be adjusted according to the desired range of travel.**
- **Emptying or filling with the same float.**
- **Ideal for clear water.**



INSTALLATION DIAGRAM

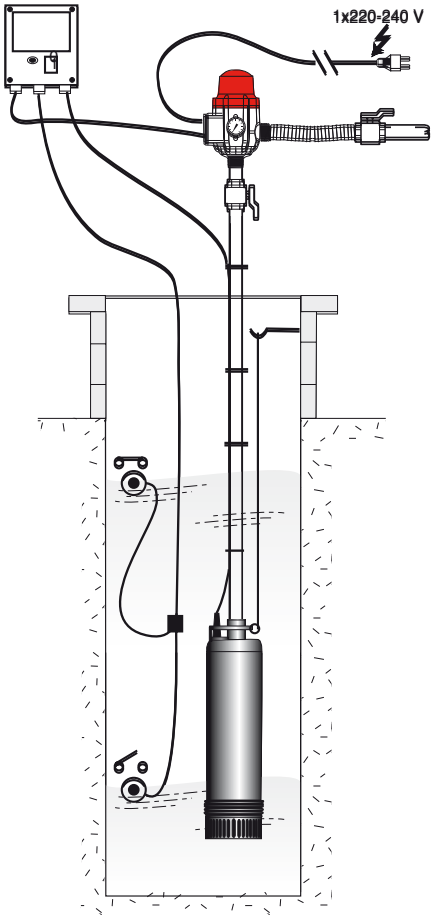

CHARACTERISTICS

Descriptions

EUROFLOT 423VR1-5	5 m Cable	0,8 Kg
EUROFLOT 423VR1-10	10 m Cable	1,5 Kg
EUROFLOT 423VR1-20	20 m Cable	2,9 Kg

Number of wires :	3 x 1 mm²
Cable AO7RN-F diameter :	8 mm + - 0,3 mm
Float diameter :	82 mm
Float :	Neoprene
Number of cycles :	50 000
Displacement radius :	10 m max.
Weight of float :	0,34 Kg
Switch compliance :	CEE24 NFC61-120
Current :	250 V max.
Max. motor load for switch :	8A
Depth of immersion :	10 m max.

FEATURES

a) Installation

- Emptying or filling according to choice of wires.

b) Packaging

Individual packaging.

OPERATING RANGES

Max. temperature:	**0 to 50°C**
Protection class:	**IP68**
Max. submergence depth:	**100m**

I.P.A.E.

ELECTRONIC AIR PRESSURE SWITCH IPAE

BENEFITS

- **Impervious to scum.**
- **Perfectly sealed, even if the cable is damaged.**
- **Only reacts to pressure.**
- **Ideal for an explosion-proof installation.**

Option: several cable lengths 10, 20 and 30 m (different lengths available to order).

ATEX INSTALLATION

(EXPLOSION-PROOF)
Use the Zener barrier: 2521216
Usable in the following zones:
Gases and vapours: zone 0, zone 1 and zone 2
Dust: zone 20, zone 21 and zone 22

SPECIFICATIONS

Output signal:	4mA to 20 mA
Protection class:	IP68
Max. submergence depth:	100m
IPAE material:	Inox 1.4571
Cable material:	PUR

OPERATING PRINCIPLE

- Air pressure switch for controlling submersible pumps.
- This air pressure switch has been designed to measure level accurately and reliably. Low sensitivity to its environment due to sealed operation.
- To be used with Yn 5000 E switch boxes

DIMENSIONS

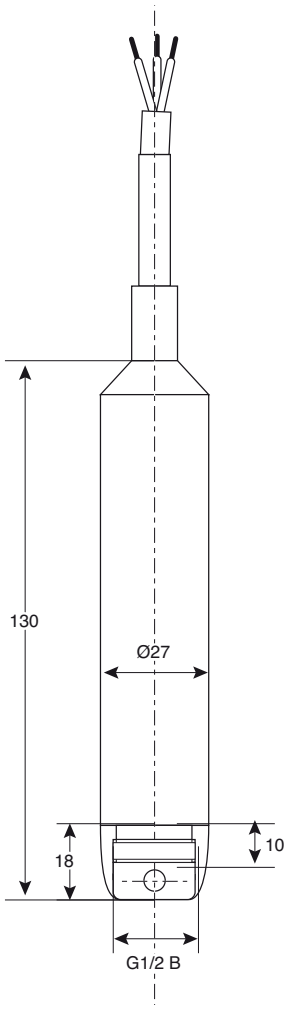



I.P.A.E.

NOTES

OPERATING RANGES

Power supply:	**230 V single-phase or 230/400 V three-phase**
Frequency:	**50 Hz***
Current:	**0,32 to 30 A****
Motor protection:	
	1 or 3 ~ 230 V : 0,15 to 5,5 kW
	3 ~ 400 V : 0,15 to 15 kW
Max. ambient temperature:	**+ 50°C**
Protection class:	**IP54**

*60 Hz, on request
** Above this, please contact us

YN 1200

SWITCH AND PROTECTION BOXES

For double pumps or two single 50 Hz pumps

BENEFITS

- **Safe operation due to the automatic activation of the backup pump in the event of a fault on the pump in operation.**
- **TPO (thermal protection on opening) or PTC (thermistors) protection of motors against over-current and ipsothermal protection.**
- **Management of pump operating times via a weekly clock programmable in two-hour units.**
- **Remote control and transmission of operating and fault statuses.**
- **Signalling on front panel via indicator lights.**
- **Easy to install and use.**
- **Fully automated by the PMS (Pump Management System).**
- **Dual voltage as standard.**

APPLICATIONS

- Control and management of two motors for:
  Double pumps : DIL, JRL,
  - single and double circulating pumps: DCX, DXM, SXM, etc.
  - single twin pumps: LRL, SIL, PBS, NOS, GET, etc, …
- For any type of new, old or reconditioned system.

DESIGN

PE (polyethylene) housing.
Screwed closure of cover.
Wall-mounting via 4 brackets (supplied).
Sealed cable glands.
Conforms to EN 60.439-1 standard
Electromagnetic compatibility:
EN 50081-1 / EN 50081-2.











YN 1200

DESCRIPTION

Front panel

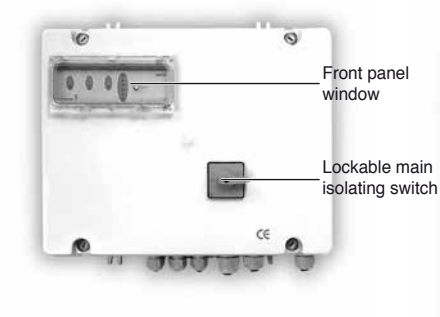

Interior of box

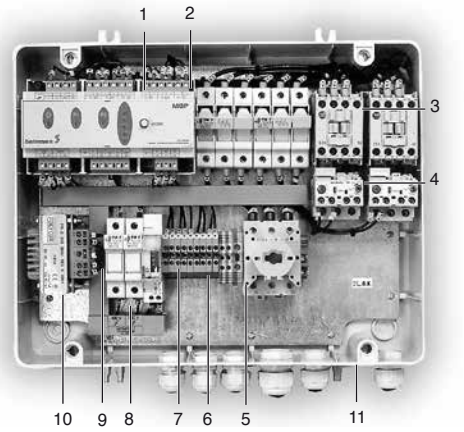

1 - PMS (Pump Management System)
2 - Fuse holders/fuses to protect motors against short-circuits
3 - Contact
4 - Thermal relay with slider for adjusting motor amperage
5 - Main isolating switch with mains power supply connection terminals
6 - Grounding terminal assembly
7 - Terminal block
8 - Weekly clock for automatic pump changeover (in 2 hr time slots)
9 - Fuse holder/voltage selection fuse (230 V or 400 V)
10 - Transformer
11 - Cable glands

View of clock

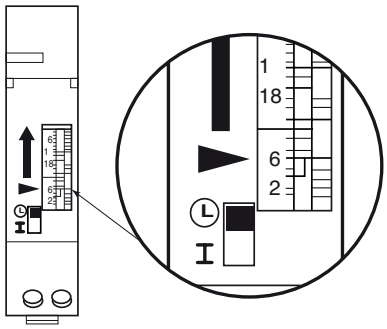

MGP description

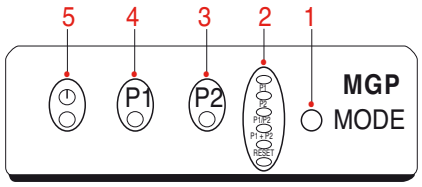

1 - Rotating operating mode selector
2 - Selected mode LED indicator
3 - Dual-colour Pump 2 On or fault LED indicator
4 - Dual-colour Pump 1 On or fault LED indicator
5 - Voltage on LED indicator

Operating mode

0 : units shut down

P1: pump 1 override position

P2: pump 2 override position

P1/P2 : the pumps operate alternately, according to the logic state of the external clock control

P1 + P2 : the pumps operate in parallel, with one of the two pumps shut down according to the logic state of the external clock control

RESET : manual resetting of the system after an ipsothermal fault on the motor

CHOICE OF BOXES

According to the nominal current of the pump. Consult the pump identification plate.

Item	Current range in amperes	Order reference
YN1201	0,32 to 1,0	4059524
YN1203	1,0 to 2,9	4059525
YN1205	1,6 to 5,0	4059526
YN1212	3,7 to 12	4059527
YN1230	12 to 30	4059528

ANCILLARY CONNECTIONS

The following elements shall be connected to the box:
- power supply
- pump(s)
- isothermal or PTC sensor
- remote control
- reporting

DIMENSIONAL SPECIFICATIONS

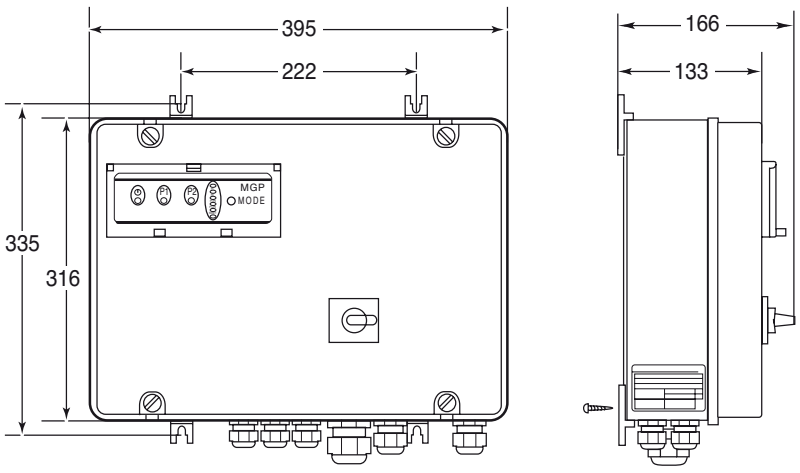

OPERATING RANGES

Power supply:	**single-phase 230V or 400 V three-phase***
Frequency:	**50 / 60 Hz**
Current:	**1,5 to 12A**
Motor protection:	**0,55 to 4 kW**
Ambient temperature:	**-30°C to +50°C**
Protection class :	**IP54**

*according to model

MS LIFT

SWITCH AND PROTECTION BOXES
For lift pumps 50 Hz / 60 Hz

ADVANTAGES

- **Management functions dedicated to lift-pumping, according to level detection by floats.**
- **Total protection of pump motors (overload and thermal + TPO (thermal protection on opening) sensors.**
- **Intuitive control of operations via buttons, LEDs and icons.**
- **Signalling on front panel by LED indicators**
- **Manual override of the pump(s) on overflow.**
- **Integrated overflow alarm which can be made independent from the power supply system by connecting 9V* batteries to the input provided for this purpose.**
- **Possible to lock the control box controls in the event of an outside installation.**
- **Configurable delay on stoppage of pump in order to allow for possible draining of pump, if required.**
- **Anti-blocking protection can be activated for a 2-second test every 24 hr.**
- **Use of NIVO430 or EUROFLOT423 type floats according to type of liquid.**
- **Information transmissions dry contact.**
- **Safe operation in the event of interventions thanks to the external isolating switch.**

*Not supplied

APPLICATIONS

- Management of one or two pumps in a fixed installation: submerged sump or dry pit (SVO, SVA, SHS, SBS, SDL, TP 2800, AQUAVAL).
- Monitoring of level and protection of motor(s) from overcurrent, thermal overloads and dry running.

MS-Lift for 2 pumps



DESIGN

- UV-resistant IP54 case.
- Wall-mounting via 4 screws (not supplied).
- Cover is screwed shut.
- Conforms to the EN 50178, EN 60204-1, EN 60730-1, EN 61000-6-2 and EN 61000-6-3 standards
- Electromagnetic compatibility: 2004/108/EG
- Low-voltage directive: 2006/95/EG.

Four standard models

- MS-Lift 1x4 kW: 230 V single-phase or 400 V three-phase for 1 pump with 2 floats.
- MS-Lift 2x4 kW 230 V or 400 V three-phase: for 2 pumps with 3 floats.

MS LIFT

DESCRIPTION

MS-Lift 1x4kW



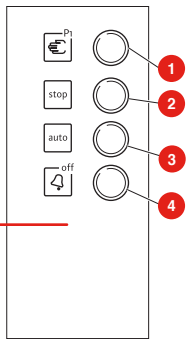

1- Manual operation of pumps (press and hold)
2- Stoppage of automatic mode
3- Automatic mode
4- Stoppage and clearance of alarm
5- Pump 1 automatic mode indicator light
6- Pump 1 operating indicator light
7- Pump 1 overload indicator light
8- Pump 1 winding fault indicator light
9- Pump 2 automatic mode indicator light
10- Pump 2 operating indicator light
11- Pump 2 overload indicator light
12- Pump 2 winding fault indicator light
13- Maintenance indicator light
14- Overflow fault indicator light
15- Power indicator light

MS-Lift 2x4kW



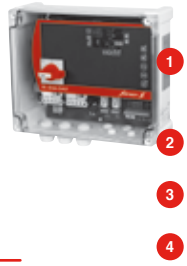

ANCILLARY CONNECTIONS

The following elements shall be connected to the box:
- Power supply for pump(s),
- TPO for pump(s),
- General pump fault transmission,
- 230 V~1 A outlet for auxiliary overflow alarm (siren),
- Power supply.
- Overflow alarm transfer (2x4 kW model only).

DIMENSIONS OF BOXES

Weight (in kg) :	MS-Lift 1x4kW	MS-Lift 2x4kW
without packaging	2,0	2,8
Width (mm)	191	289
Height (mm)	240	239
Depth (mm)	155	155

OPERATION

1 pump + 2 floats operation

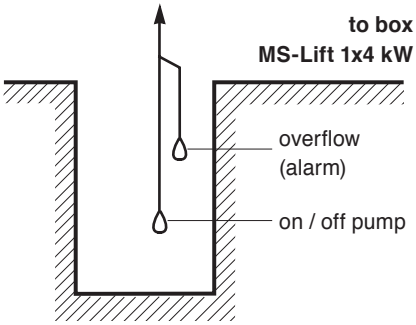

2 pumps + 3 floats operation

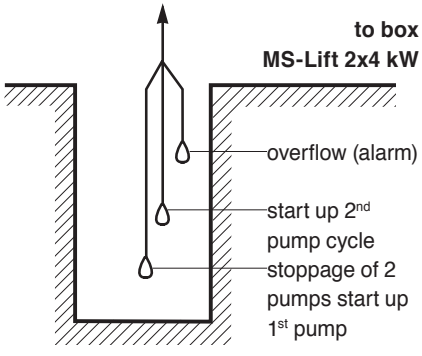

RECOMMENDED ACCESSORIES

- NIVO430 floats for muddy water
- EUROFLOT423 floats for clean to slightly muddy water



• NIVO430 floats

• EUROFLOT423 floats



RANGE OF USE

System of supply:	**Mono 230V or Tri 400V**
Frequency:	**50/60 Hz**
Current:	**0,3 to 12 A**
Power maximal of the motor:	**4 kW**
Temperature range:	**-20° to + 60°C**
Protection class:	**IP65**

YN 3000

CONTROL AND PROTECTION BOXES

For 1 or 2 50-60 Hz lift pumps

BENEFITS

- **Continuous display of the state of the system: fill level, pumps in operation, amperage, separate timer for each pump...**
- **Visual and audible indicators for faults (option of connecting an external light or audible alarm).**
- **Fault(s) retained in memory until they are dealt with.**
- **Pumps regulated by float switches or EAPS piezometric sensor (4-20mA signal).**
- **Pump changeover at each start-up.**
- **Safety of operation: automatic start of the emergency pump if operating pump fails.**
- **Protections: optional connection to iso-thermal sensors, float switch prevents overflow.**
- **If the pumping system is stopped for an extended time, option of setting the pumps to operate automatically for 5 seconds every 24 hours.**

APPLICATIONS

- Microprocessor-control of one or two immersed or dry pit lift pumps (UCA, UCB, UVO, SVO, SCA, SBS, AQUAVAL, Mini-SDL, FVO,...).



• Yn 3212-Box 2-pump version



• EAPS clean and waste water level sensor (only 0-1 m scale)

• EUROFLOT 423
float switch for clean water



• NIVO 430
float switch for waste water



YN 3000

DESIGN

- polycarbonate casing.
- Transparent front cover.
- Wall-mounted.
- Complies with European standards EN61010-1, EN61000-6-3, EN61000-6-2.
- Complies with directives for low voltage as amended (directive 73/23/EEC) and "electromechanical compatibility" (directive 89/336/EEC).

DESCRIPTION OF OPERATION

Servo-control uses a microprocessor (CPU) to control, monitor, record and regulate all the operating functions. Electronic slave switches give excess current protection. The box has a deck carrying both power and control relays. The box operates only with pumps with direct-on-line starting.
The level can be controlled either by a piezometric EAPS sensor, or by float switches: Nivo 430 (muddy water) or Euroflot 423 (clean water).

Box Yn 3100: for 1 pump
- 3 float switches, or
- 1 EAPS + 1 float switch safety level haut (option).

Box Yn 3200: for 2 pumps
- 4 float switches, or
- 1 EAPS + 1 float switch safety level haut (option)

IDENTIFICATION

YN3112 M

Name of the range

Number of pumps:
1 = 1 pump
2 = 2 pumps

maximum current

M = Single-phase 230V
T4 = Three-phase 400 V

DESCRIPTION OF FRONT (SINGLE-PUMP VERSION)

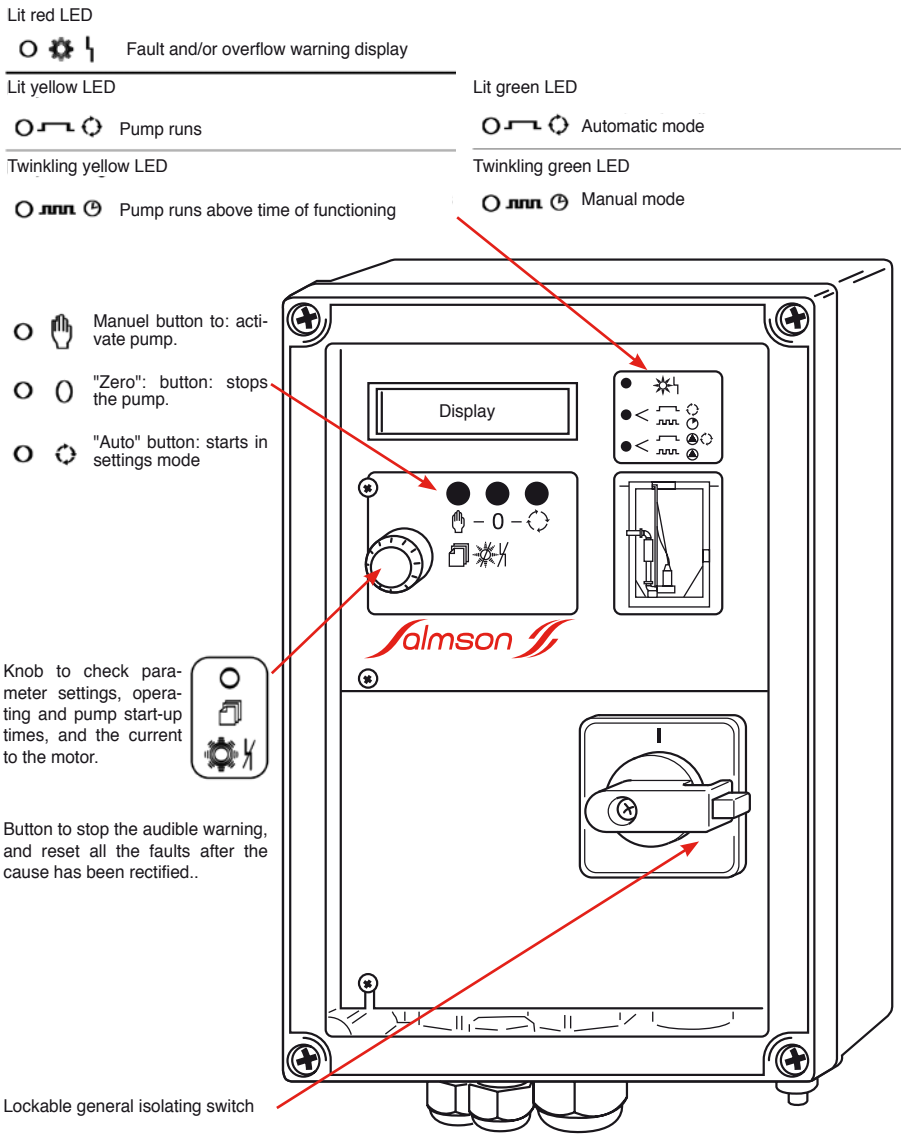

OPERATING MODES AVAILABLE FOR LEVEL ADJUSTMENT

• A - with piezometric EAPS sensor

The EAPS sensor is connected to the box by an electrical cable. The static pressure varies with the water level. These pressure variations are sensed by a stainless steel membrane and converted in to an 4-20mA analogue signal.

For more safety, it is possible to connect a float switch to the box to detect level overflow (4) controlled by the operation of the pumps.

In Atex zones use a Zener barrier

• B - with float switches

A maximum of four float switches (operated with 2 pumps) can be connected to the box.

Changeover of pumps

- each time pumps are started up.
- automatic in emergency operation, when there is a breakdown of the pump in operation (fail soft mode).
- override possible in manual mode.

Threshold levels (see drawings below)

1 - At low level: both pumps are switched off simultaneously.
2 - First pump start-up level.
3 - Second pump start-up level if the first pump is faulty.
4 - Level overflow. The audible warning and indicator light are activated as soon as the overflow level is reached.

Example of operation
2 pumps with EAPS sensor and safety float switch

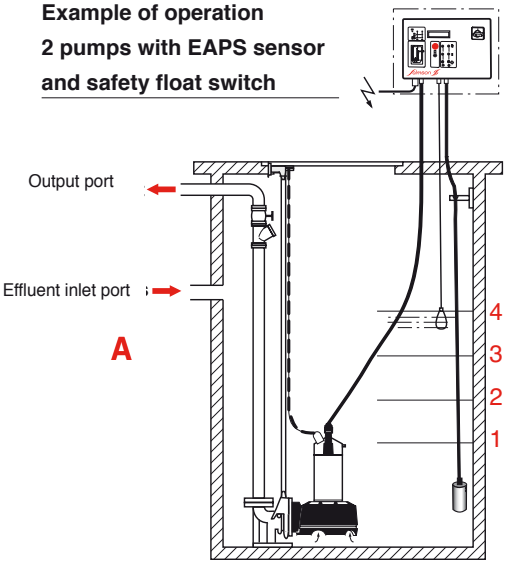

OR

Example of operation
2 pumps with 4 float switches

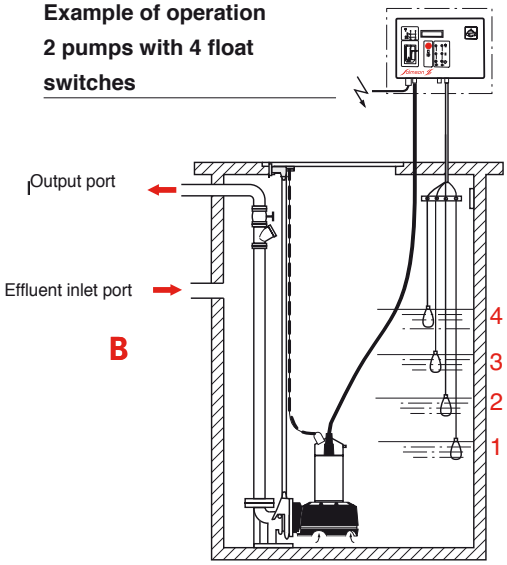

CONNECTIONS (EXAMPLE BOX YN3212)

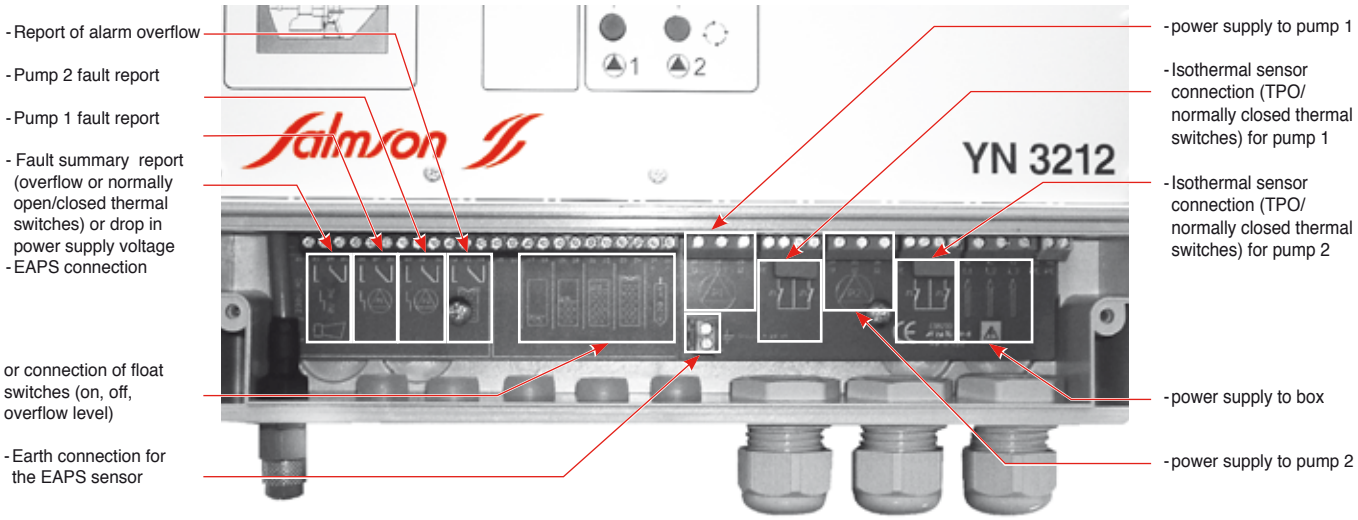

YN 3000

SIZES AND ELECTRICAL REQUIREMENTS

Name of the box	Order reference	Number of pumps	Voltage	Amperage	Dimensions (mm)	Masse
			V	A	Width x Height x Depth	kg
Yn 3112 M	2522869	1	1~230	0,3 - 12	180 x 255 x 180	1,5
Yn 3112 T4	2522870	1	3~400	0,3 - 12	180 x 255 x 180	1,5
Yn 3212 M	2522871	2	1~230	0,3 - 12	320 x 300 x 120	2,8
Yn 3212 T4	2522872	2	3~400	0,3 - 12	320 x 300 x 120	2,8

SPECIAL FEATURES

Installation

- Fixes to wall with 4 screws for the YN3112 box (1 pump) and with 3 screws for the YN3212 box (2 pumps).
- Must be installed in a dry place under cover or in a roadside box.

Packaging

- Box delivered in a shock-proof padded card-board box, with Installation Manual, but with no float switch, or EAPS.

ACCESSORIES

- **EAPS level sensor**, 0-1 Metre , for clean or muddy water (Ref.: 2519924 - 10 m of cable / 2519925 - 30 m of Cable / 2519926 - 50 m of cable). For Installation in an ATEX, use the Zener barrier (Ref.: 2521216).
- EAPS cable hanger (Ref.: 2519927).
- **NIVO 430** type float switch for muddy water (Ref.: 4027319 - 10 m of cable /4027320 - 20 m of cable).
- **EUROFLOT 423** type float switch for clean water (Ref.: 4048052 - 5 m of cable - 4048483 - 10 m of cable / 4048484 - 20 m of cable).

SC LIFT

PROTECTION AND SWITCH BOXES

OPERATING RANGE

Number of pumps:	**1 to 4**
Network supply:	**3 ~ 400V**
Frequency:	**50 Hz/60Hz**
Nominal intensity up to:	**72A**
Motor power up to*:	**35-40kW**
Max. ambient temperature:	**+40°C**
Protection index:	**IP54**

*For information only

ADVANTAGES

- **Competitive unit intended for collective or communal applications.**
- **Easy use and handling with a "Man-Machine-Interface" using a single button.**
- **Navigation on screen with symbols and menus according to latest generation Salmson in-line pump principle.**
- **Pump and system status and current values permanently displayed.**
- **Fault history with up to 16 separate messages.**
- **Data bus interface available for future options (ModBus, BACnet).**
- **Service function menu protected by access code.**

APPLICATIONS

- Pump management in fixed system: submerged sump or dry pit (Rocsan evo, UVO-UCA-UCB).
- Level supervision and protection of motor/motors against overcurrent, thermal overload and dry running.



SC LIFT

IDENTIFICATION

SC - L - 2X 16A - T4 - DOL

- Product range
- Pumping application
- number of pumps
- nominal current per pump
- three-phase power supply
- start-up (DOL : direct, SD : étoile/triangle)

OPERATION

The SC Lift boxes can be used to control up to two standard pumps for untreated or waste waste pumping systems. These boxes are coordinated with a programmable micro-controller (“Soft- PLC”) which controls and regulates centrifugal pumps.

The system pumps are activated with an SC Lift according to the level measured and the different activation thresholds set. Different control methods can be selected depending on whether a tank is to be emptied or filled. The pumps are completed protected and monitored.
Options are available on request for other requests of specific systems

DESIGN

- Painted sheet steel cover
- Lid closed with standard key lock for switch board
- Wall attachment
- Concealed cable screws
- LED display
- MODbus communication
- Compliant with standards EN 60439-1 and EN 60439-2
- EN electromagnetic compatibility 61000-6-2 and EN 61000-6-3

DESCRIPTION

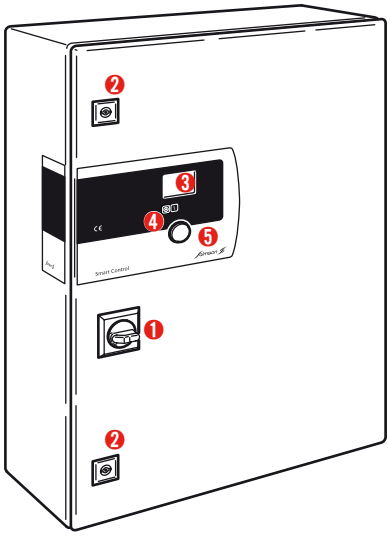

1. Main switch
2. Standard key locks
3. LCD screen
4. VGeneral pump operation and fault lights
5. Navigation button

A. Main isolation switch
B. Circuit breaker<12 A ; fuses >12A in Y/Δ
C. Transformeur
D. Operating switches 1-0-Auto
E. Motor protections and switches (here in Y/Δ)
F. Salmson SC card (“Soft-PLC”)
G. User interface connection
H. Filter for DI analogue inputs
I. Connection for motor and motor protection
J. Connection for sensors, float switches and E/S

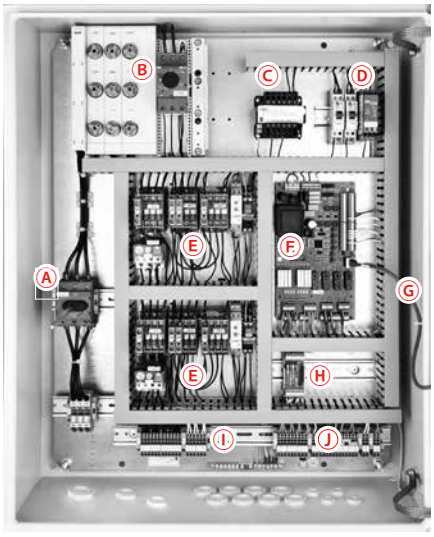

ELECTRICAL AND DIMENSIONAL FEATURES

Item code	Description	Intensity range	Voltage	Frequency	Number of controllable pumps	Height x Width x Depth
		A	V	Hz		mm
2539076	S-CTRL-SC-L-1x9A-T4-DOL-WM-PKG	6,3-10,0	3~400	50/60	1	600 x 380 x 210
2539077	S-CTRL-SC-L-2x9A-T4-DOL-WM-PKG	6,3-10,0	3~400	50/60	2	600 x 600 x 210
2539080	S-CTRL-SC-L-1x12A-T4-DOL-WM-PKG	8,0-12,0	3~400	50/60	1	600 x 380 x 210
2539081	S-CTRL-SC-L-2x12A-T4-DOL-WM-PKG	8,0-12,0	3~400	50/60	2	600 x 600 x 210
2539100	S-CTRL-SC-L-1x12A-T4-SD-WM-PKG	10,3-14,6	3~400	50/60	1	600 x 600 x 210
2539101	S-CTRL-SC-L-2x12A-T4-SD-WM-PKG	10,3-14,6	3~400	50/60	2	760 x 600 x 210
2539104	S-CTRL-SC-L-1x18A-T4-SD-WM-PKG	12,9-19,0	3~400	50/60	1	600 x 600 x 210
2539105	S-CTRL-SC-L-2x18A-T4-SD-WM-PKG	12,9-19,0	3~400	50/60	2	760 x 600 x 210
2539108	S-CTRL-SC-L-1x24A-T4-SD-WM-PKG	17,2-24,1	3~400	50/60	1	600 x 600 x 210
2539109	S-CTRL-SC-L-2x24A-T4-SD-WM-PKG	17,2-24,1	3~400	50/60	2	760 x 600 x 210
2539112	S-CTRL-SC-L-1x32A-T4-SD-WM-PKG	22,4-32,7	3~400	50/60	1	600 x 600 x 210
2539113	S-CTRL-SC-L-2x32A-T4-SD-WM-PKG	22,4-32,7	3~400	50/60	2	760 x 760 x 210
2539116	S-CTRL-SC-L-1x42A-T4-SD-WM-PKG	31,0-43,1	3~400	50/60	1	600 x 600 x 210
2539117	S-CTRL-SC-L-2x42A-T4-SD-WM-PKG	31,0-43,1	3~400	50/60	2	760 x 760 x 210
2539120	S-CTRL-SC-L-1x55A-T4-SD-WM-PKG	37,9-55,1	3~400	50/60	1	600 x 600 x 210
2539121	S-CTRL-SC-L-2x55A-T4-SD-WM-PKG	37,9-55,1	3~400	50/60	2	760 x 760 x 210
2539124	S-CTRL-SC-L-1x72A-T4-SD-WM-PKG	50,0-72,4	3~400	50/60	1	760 x 760 x 210
2539125	S-CTRL-SC-L-2x72A-T4-SD-WM-PKG	50,0-72,4	3~400	50/60	2	760 x 1000 x 210

CONNECTIONS

- Switch box supply 3~400 V or 1~230 V
- Pump supply 3~400 V or 1~230 V
- PTO or PTC motor protections
- Up to 5 floats for 2 pumps (3 on/off floats, 2 overflow and dry run safety floats)
- IPAE hydrostatic level probe (possibility of adding 2 overflow and dry run safety floats
- External on/off contact
- Fault and general operation signal
- Fault and individual operation signal with optional card

SC LIFT

INSTALLATION

Drainage method

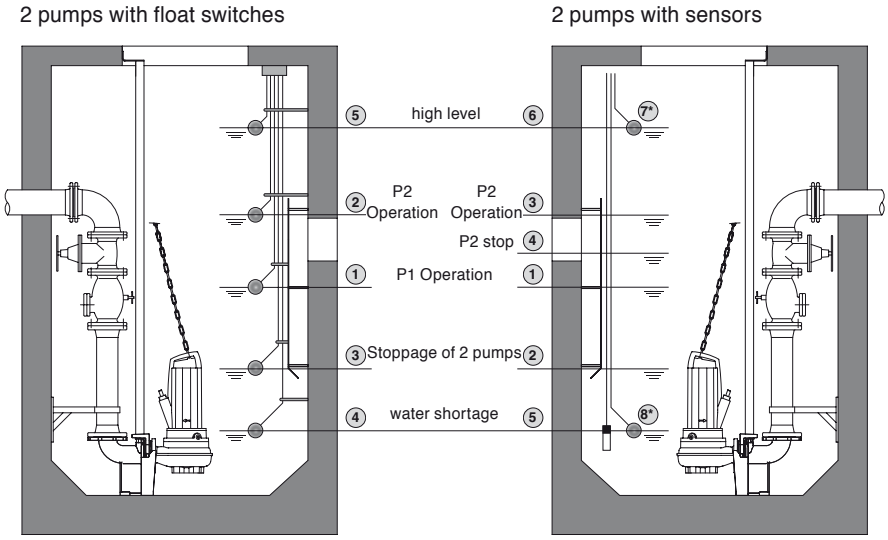

Filling method

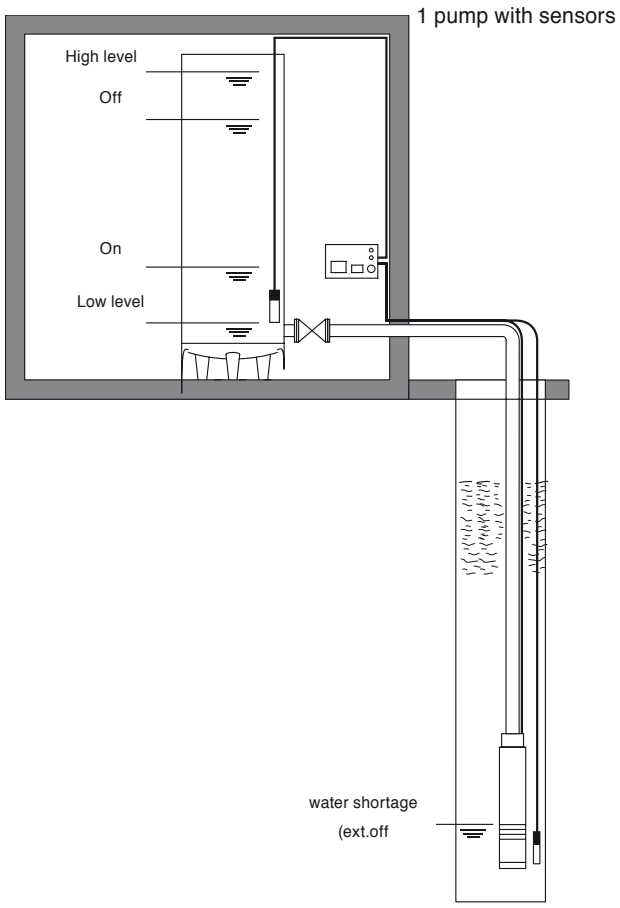

RECOMMENDED ACCESSORIES

- **Euroflot 423**, uroflot 423 float for clear fluids with 10m of cable, ref. 4048483.
- **Nivo 430**, Nivo 430 float for aggressive fluids and waste water with 10m of cable, ref. 4027319.
- **IPAE**, probe with integrated hydrostatic pressure sensor with 10m of cable, ref. 2519924.
- **GSM/GPRS unit**, data communication via GSM network.

CC-HVAC

MULTI-PUMP PROTECTION AND CONTROL BOX
For air conditioning pumps 50-60 Hz

RANGE OF USE

Supply system:	**3~400V**
Frequency :	**50/60 Hz**
Max current:	**see identification plate on the cabinet**
Nominal power per pump:	**max. 200kW***
Max. ambient temperature:	**0°C to +40°C**
Max. storage temperature:	**-10°C to +50°C**
Range of speed:	**40% to 100% of nominal speed of the motor**
Number of pumps:	**1-6****
Protection class:	**IP54*****

* Greater power on demand
** More pumps on demand
*** The cabinet can be installed out of doors, under certain conditions

ADVANTAGES

APPLICATION

- **The performance of the pumps can be matched to thermal requirements.**
- **The point of operation of the pumps can be optimised.**
- **The electrical consumption of the pumps is reduced.**
- **The consumption of energy in manufacture is reduced.**
- **Levels of noise and vibration are improved.**

PRODUCT

- **Backlit touch screen provides a single point for inputting, viewing and altering parameters.**
- **Numerous adjustment and control modes.**
- **Several settings programmable internally or externally.**
- **Service maintained if the controller fails.**
- **Compatible with communication protocols CANopen, Ethernet, Lonworks, Profibus and Modbus RTU.**
- **GSM module, GPRS, and web server for remote control (optional).**
- **Variation of speed possible on all types of pump.**

APPLICATIONS

Variation of flow rate from 1 to 6 pumps by report from an analogue measurement signal (4-20mA) to adapt to the needs of the installation.

Pumps compatible with CC-HVAC : LRL/JRL, LRN/JRN, SIL, DIL, PBS, NOS, NRG, GET, SCP.

The CC-HVAC is designed for:
- Heating
- Ventilation
- Air-conditioning systems
- Transfer of fluid
- Cooling processes (process peripherals).

• CC-HVAC CF – cabinet, 6-pump version, star-delta starting



CC-HVAC

DESIGN

- Cabinet: metal.
- Box: metal.
- Wall mounted (WM) with four ø 8 mm screws (not supplied).
- Base mounted (BM): 100 mm-tall base supplied for cable entry.
- Meets European standards EN60439-1 EN 61000-6-2 EN 61000-6-3 (P ≤ 30 KW) EN 61000-6-4 (P>30KW).
- Complies with the provisions of the “low voltage” directives as amended (Directive 2006/95/CEE) and “electromechanical compatibility” as amended (Directive 2004/108 CEE).
- Meets European standards in force (see Installation Manual.

IDENTIFICATION

CC-HVAC 4X 5,5 FC WM/BM

- Name of the range
- Number of pumps from 1 to 6
- Nominal power P2 motor (kW)
- With frequency controller
- Wall-mounted appliance
- Base-mounted appliance

OPTIONAL ACCESSORIES

- Differential Pressure Sensor DPS 0.2 bar 1 bar (2 bar 4 bar 6 bar 10 bar).



- Pressure Sensor
  - 0 - 10 bar,
  - 0 - 16 bar,
  - 0 - 25 bar,
  - 0 - 40 bar.
- External temperature sensor PT100

DESCRIPTION (EXAMPLE WALL-MOUNTED BOX, DIRECT STARTING VERSION)

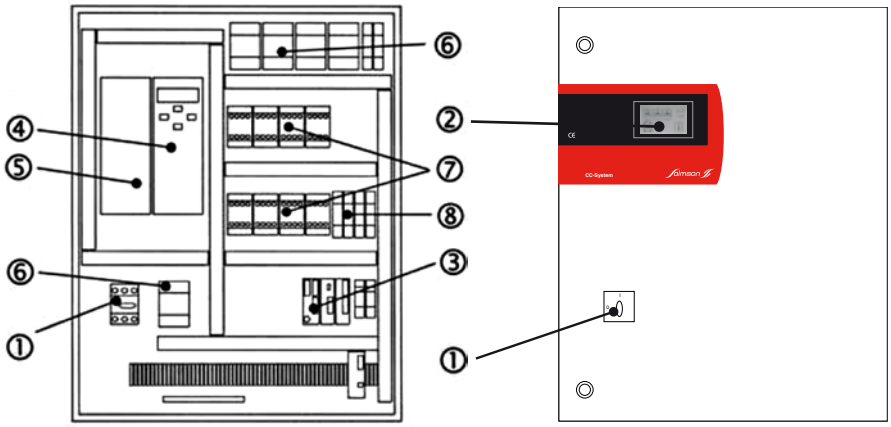

1 : Main switch

2 : Tactile backlit screen to display operating and state of service data (different colours) and to input parameters

3 : Frequency controller

5 : Sine filter

6 : Motors and frequency controller protected by fuses (circuit-breaker on request)

7 : Contactors / Combinations of contactors for direct (or star-delta) starting and splitting the power circuit (system and speed variation)

8 : Switch to select pump operating modes: automatic (control by automatic system) / manual (emergency / test mode) / 0 (pump off and disconnected from the automatic system)

METHOD OF OPERATION

The system is controlled by a programmable automat. This can manage from 1 to 6 set-speed pumps. If the system has a built-in frequency controller (FC), then in regulated mode an adjustable set value is entered into the automated system which compares this value with the measured temperature, pressure and flow rate. The automated system adjusts the number of pumps in operation and the speed of the lead pump for bring the measured value into line with the set value.

When not in regulated mode, the system serves an external control signal. In this case the system is restricted to single-pump operation.

OPERATION IN CONSTANT REGULATED MODE

With frequency controller

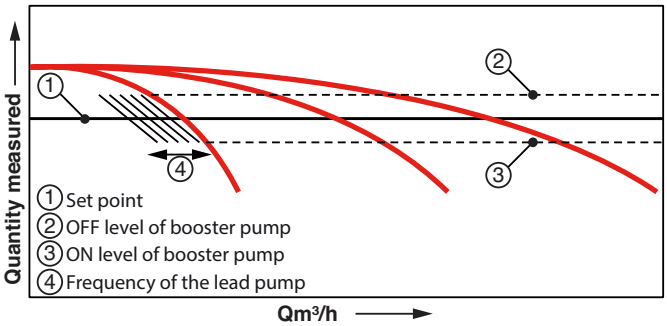

Depending on the flow rate required by the installation, set point 1 will be maintained by the automated system by starting up zero or more pumps at a fixed speed, and the lead pump at a variable speed.

Without frequency controller

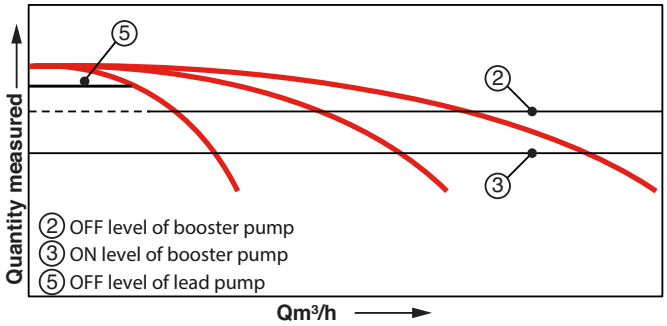

For boxes operating without a frequency controller (direct connections) and/or with one that is faulty, the principle is the same by comparing the set value and the actual value. Since there is no possibility of adjusting the speed of rotation of the lead pump, the system will operate on two states between the ON level 3 and OFF level 2 of the booster pumps.

The starting of the booster pump is identical to operating with the frequency controller.

To stop the lead pump, a different threshold can be defined in menu 5.

TECHNICAL DATA AND SIZES OF THE BOX

Max nominal power P2(kW)	1,1	1,5	2,2	3,0	4,0	5,5	7,5	11,0	15,0	18,5	22,0	30,0	37,5	45,0	55,0
Maximum nominal current allowed per pump (A)	3,0	3,7	5,2	7,0	9,0	13,0	16,0	24,0	32,0	37,5	43,1	61,0	72,4	89,6	106,0
Power factor cos φ	> 0,90														
Max yield for P	> 0,90														
Yield in the partial load interval allowed	> 0,85														
Electrical connection	3X400 V * +PE / 50 Hz														
Output voltage	3 x 130 V – 400 V														
Output frequency	20 Hz – 50 Hz/60 Hz														
Range of control (%nominal motor speed)	40% - 100%														
Permitted ambient temperature	0°C to +40°C														

*3X230 V on request

There are eight different sizes of CC-HVAC. The choice of the structure depends on the motor power en kW (direct starting or delta star) and on the number of pumps to be controlled. To discover the motor power, consult the identification plate on the pump concerned.

Nominal power P2 (kW)	**Dimensions and Weight of the CC-HVAC**			
	Number of pumps	Dimensions (LxHxP) (mm)	Wall mounted (WM) or base mounted (BM)	Weight (kg)
0.75 – 4.0	1-4	600X760X250	WM	50
	5-6	760X760X250	WM	70
5.5-7.5	1-2	600X1900X500	BM	175
	3-4	800X1900X500	BM	205
	5-6	1000X1900X400	BM	230
11.0 – 15.0	1-2	800X1900X500	BM	220
	3-4	1000X1900X400	BM	270
11.0	5-6	1000X1900X400	BM	300
15.0	5-6	1200X1900X500	BM	360
18.5 – 22.0	1-2	800X1900X500	BM	250
	3-4	1000X1900X400	BM	320
	5-6	1800X1900X500	BM	500
30	1-2	800X1900X500	BM	270
	3-4	1200X1900X500	BM	380
	5-6	2000X1900X500	BM	580

CC-HVAC

PERMITTED METHODS OF CONTROL

Automatic regulation in air conditioning systems is a way to obtain constant performance in spite of variations in the load

Adjustments are made by the frequency controller acting on the lead pump and by switching one or more booster pumps on and off.

The set point differential (between the flow rate and the return rate) is held constant by comparison between the set point itself and an actual measurement using a differential measurement sensor.

MODE	DESCRIPTION		OPTIONAL ACCESSORIES	ACCESSORIES PROVIDED BY THE CLIENT
ΔP-C: constant pressure differential	**FUNCTION**: The pressure differential provided by a pump is held constant at the value of a set pressure. **APPLICATIONS:** Maintains a pressure always sufficient to provide fluid to all the circuits whatever the variations of loss of load. Ensures stability of operation and reduces disturbances from the operation of one transmitter on the operation of another.	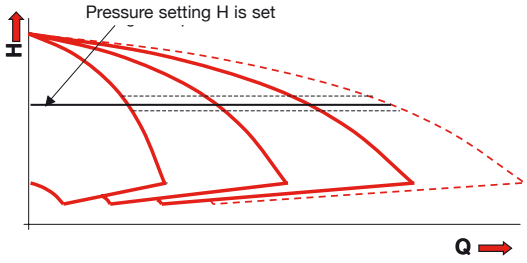 Up to six pumps in cascade can be controlled	1 differential pressure sensor DPS	-
ΔP-V: variable differential pressure point	**FUNCTION**: - The set value, proportional to the flow rate, is established for the lead pump. - Set value changes in a predefined curve. **APPLICATIONS:** Saves more energy than Δp-c mode. Used for systems with greater loss of load. Reduces hiss from 2-way and thermostatic valves.	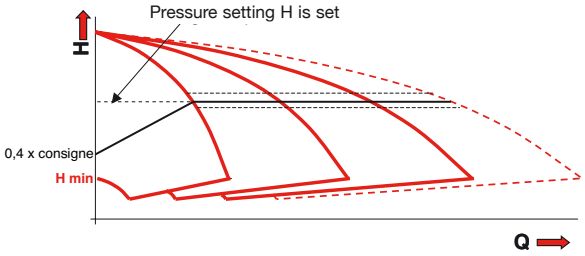 Up to six pumps in cascade can be controlled	1 differential pressure sensor DPS	-
ΔT-C: temperature differential constant between 2 points	**FUNCTION**: to maintain a constant temperature between the flow pipe and the return pipe in a system or an transmitter, regardless of changes in loss of load. **APPLICATIONS:** the thermal regulation of single circuits, single-pipe heating systems, air-conditioning, solar heating, domestic hot water storage systems, process control, etc. Outgoing temperature Return temperature...	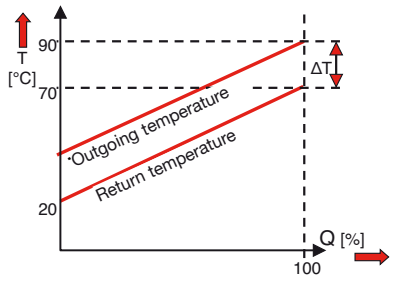 Six pumps can be run in cascade	1 automated temperature module	Two PT100 or PT1000 temperature sensors
ΔT-V: constant temperature differential between 2 points, setting can be exterior temperature or temperature of process	**FUNCTION**: to maintain a constant temperature between the flow pipe and the return pipe in a system or an transmitter, regardless of changes in loss of load. The set point ΔT can vary with changes in the exterior temperature or the temperature of the process. **APPLICATIONS:** the thermal regulation of single circuits, single-pipe heating systems, air-conditioning, solar heating, domestic hot water storage systems.	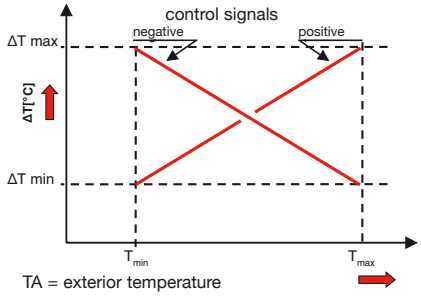 TA = exterior temperature TP = temperature of process Six pumps can be run in cascade	1 automated temperature module PT100 Salmson exterior temperature sensor available	Three PT100 or PT1000 temperature sensors

PERMITTED METHODS OF CONTROL

MODE	DESCRIPTION		OPTIONAL ACCESSORIES	ACCESSORIES PROVIDED BY THE CLIENT
p-c : constant pressure: Maintains the pressure constant at one point in the system regardless of changes in the flow rate	**FUNCTION** : Ensures constant pressure in an installation regardless of fluctuations in the flow rate. System using one or more pumps in cascade according to the flow rate. **BENEFITS:** Saves energy. Enables installations to be run flexibly, reduces water-hammer. Less wear and tear on the pumps.	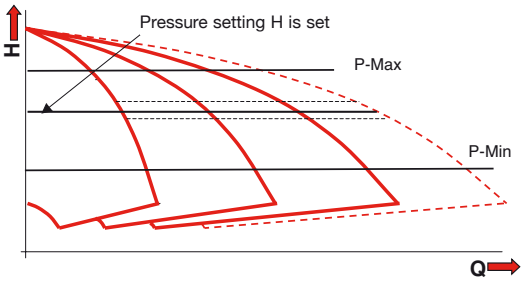 Up to six pumps in cascade can be controlled **Attention: in this mode a zero flow rate is not detected**	1 pressure sensor	-
T constant: maintains a constant temperature on a flow, return or process pipe	**FUNCTION**: - Maintains a constant temperature on the flow pipe or the return pipe in a system or an transmitter, regardless of changes in the loss of load. - Maintains a constant temperature in a process. **APPLICATIONS:** - The heat regulation of single circuits, single-pipe heating systems, air-conditioning, solar heating, storage of domestic hot water. - Controlling processes.	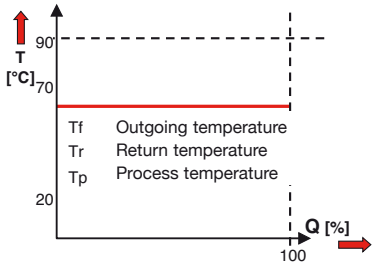 Up to six pumps in cascade can be controlled	1 automated temperature module PT100 Salmson exterior temperature sensor available	1 PT100 or PT1000 temperature sensor
n = f(T): Speed variable according to temperature	**FUNCTION**: The speed is controlled according to a linear scale by an external unit of measurement (here, the temperature). **APPLICATIONS:** Can be used in processing systems..	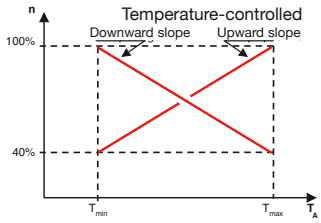 **Attention: operation limited to one pump only**	1 automated temperature module PT100 Salmson exterior temperature sensor available	1 PT100 or PT1000 temperature sensor
n = f Speed variable by an external analogue signal 0/4-20mA	**FUNCTION**: The speed is controlled by an external control signal 0/4-20mA. **APPLICATIONS :** Can be used in processing systems. Adjustments (ΔT, Δp or other) made by another system, the speed of the pump under control is then locked in..	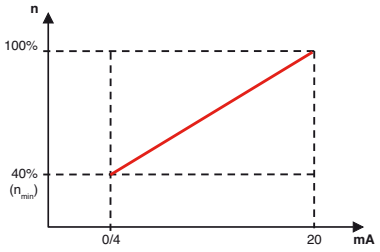 **Attention: operation limited to one pump only**	-	-

CC-HVAC

STANDARD FUNCTIONS

Name	Description
Backlit touch screen	Intuitive navigation and visual report on faults by changing the colour of the screen: red = active fault not cleared; Orange = active fault cleared; Green = inactive fault not cleared
Multilanguage control unit	Six languages active for on-screen text: D, GB, F, R (Romanian), SP, T(Turkish). (future: 27 languages)
System protected by password and levels of access	Read/write access to parameters at three levels: read-only, operator, administrator
Permutations of pumps	Pumps can be switched between Lead, Booster and Backup according to the hours of service of each pump, to a cycle, or by an Ext. Off pulse
Pump operation test	When there is a prolonged period of inactivity (parametrable), the pumps are automatically run for a paramétrable period of time to prevent the equipment seizing up
Entering the values of the settings	The control system can operate on three different internal values of set points, driven either by an internal clock or by external contacts (see the table of dry contacts available). The set point can vary over a scale of 24 hours. Day / night mode can be set up
Maximum and minimum values (mode p-c)	Control is maintained even if there are peak loads, through the monitoring of these values.
Protection against over-current	The pump motors are protected by a thermal or electromagnetic tripping device or a thermal overload relay
Controller frequency fault	If the controller fails, the pumps operate directly on the system
PID adjustment	Depending on the application, the PID adjustment can be made positive (heating) or negative (cooling
Error management	The last 35 faults are displayed in date order

DRY CONTACTS AVAILABLE AS STANDARD

Name	Description	Dry contacts	
Report on operation and system failure	Dry contacts for information on the state of the pumps: SBM : at least one pump operating SSM : system failure	Dry contacts X3 1, 2, 3 (SBM) and X3 4, 5, 6 (SSM)	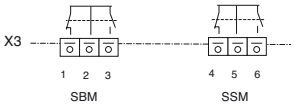
sensor connection 4-20mA	On fault, all the pumps operate at maximum speed OR one pump runs at adjustable speed OR all pumps stop	Dry contacts X4 5, 6, 7	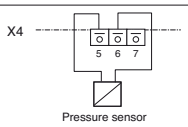
Remote On/Off	Stops and starts the installation externally (either by un external «On/Off» button on the door of the cabinet or on an external On-Off remote box)	Dry contacts X4 1, 2	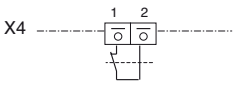
Protection from excessive temperature PTO or PTC (power > 30kW)	In the case of a PTO: pump motors are protected by a bimetal switch opening when the temperature is excessive In the case of a PTC: a rise in the temperature of the pump motors is detected by a PTC sensor	Dry contacts X2 1 to 12 for 6 pumps	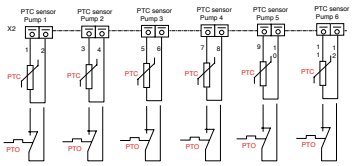
Remote switching of the three values of set points		Dry contacts X4 10, 11, 12, 13	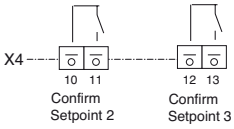
Exterior control of the frequency controller	Exterior 4/20mA signal to control the speed of one pump. The operation of several pumps is not possible	Dry contacts X4 8, 9	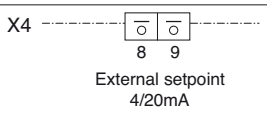
Exterior control of the set value	The set value can be adjusted by the analogue signal 4… 20mA external.		
Detection of running dry or frost	Normally closed dry contact giving information on running dry or frost	Dry contacts X4 3, 4	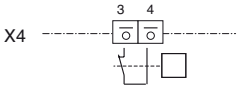
Exterior read-out of the pressure and speed parameters	Connections for 0/10V outputs giving pressure and speed values	Dry contacts X5 1, 2, 3, 4	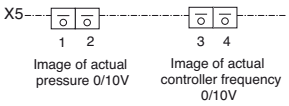

OPTIONAL FUNCTIONS

Option	Detail	Equipment provided	Equipment to be provided by the client
Power backup	Supply to the API backed up in the event of the mains supply failing. Different capacities available.	Supply unit	-
PTC relay (only for power <30kW)	Detects rise in the temperature of the pumps by means of PTC sensors	One PTC relay per pump	The pumps must be fitted with a PTC sensor
Uses an adjustable exterior set value and/ or an external 0/2…10V command	The set value can be adjusted by the external 0/2… 10V analogue signal and / or the box can be driven by a component generating a 0/2… 10V analogue signal	Converter 0-4…20A / 0/2…10V	-
Exterior control 0/10 V of the frequency controller	Exterior 0/10 V signal to control the speed of one pump. Operates on one pump only		
Backup frequency controller	If the frequency controller fails, switches over to the backup frequency controller	Frequency controller and wiring + special automation program	-
Redundant sensor	A second sensor provides a check on the measured value	An analogue input module + a second pressure or differential pressure sensor + special automation program	-
Soft start of fixed pumps	For pumps ≥ 5.5 KW. This progressive starter replaces the star/delta starting system	1 starter per pump	-
Temperature measurement	Measures an exterior temperature. For temperature regulation modes.	Temperature module (1 for three pumps) Salmson PT100 exterior temperature sensor available	sensor PT 100 or PT 1000
Unit to cut off power to each pump	Each pump can be isolated with a lock or padlock for safe maintenance.	Automated system GTC + control board/ card DDC + connecting cable	-

OPTIONAL MODULES - CENTRALISED TECHNICAL MANAGEMENT BY DRY CONTACTS

Control of the system

Equipment required: GTC Automated system board + DDC control card + Connecting cable + pump control card(s) (1 card for every 2 pumps)

Name	Description
Clearing faults	NO contact to clear faults externally
Pump switching override	NO contact to override the cyclic pump switchover externally
Remote control of each pump	NO contacts for switching the booster pumps on and off externally, Which replaces the internal operation.
External control of the H/0/A switches	Contacts for controlling the pumps externally - On (pump operating at set speed) - Off - Automatic operation

System information report

Equipment required: GTC Automated system board + operation information board + connecting cable + information board, pumps 1 and 2 + information board, pumps 3 to 6.

Name	Description
Individual report on operations and faults	Individual report on operations and faults
Report on controller operations and faults	Controller operation (NO contact) and fault (NC contact)
Report running dry	Running dry (contact NF)

CC-HVAC

OPTIONAL MODULES FOR GTC BY COMMUNICATION BUS

Option	Equipment provided
CANopen Bus	CANopen Module + COM-Interface on the CPU module of the API (automated system) + software + table of échange and specific files
Ethernet Bus	Ethernet (web server) module connected to the API (automated system) + software + table of échange and specific files
Lonworks Bus	LON/Modbus Gateway (Lonworks / Modbus converter) + COM-Interface on the CPU module of the API (automated system) (if CC-HVAC without FC)) + software + table of échange and specific files
Profibus Bus	Profibus Module + software + table of échange and specific files
Modbus RTU Bus	RS 232 RS 485 Converter + COM-Interface on the CPU module of the API (automated system) (if CC-HVAC without FC) + software + table of échange and specific files
Bacnet Bus	Bacnet Module + COM-Interface on the CPU module of the API (automated system) + software + table of échange and specific files (available from 2012)

OPTIONAL COMMUNICATION MODULES

Modules for remote diagnosis / maintenance

Option	Additional equipment provided
GSM Communication	GSM Modem + aerial (2.3m 10m or 15m) + software + installation and operating document
Web server Communication	Web server module + aerial (2.3m 10m or 15m) + software + installation and operating document
GPRS Communication	GPRS Modem + aerial (2.3m 10m or 15m) + software + installation and operating document

ELECTRICAL CONNECTIONS

Electric terminal boxes	
X0	Mains supply
X1	Power connection to pumps
Control terminal boxes	
X2	PTC PTO motor
X3	General Operating / Fault reports
X4	Sensors External control / Running dry / Anti-Frost / others
X5	Analogue input
X9	Fan

CC-HVAC electrical connection, direct starting, with frequency controller

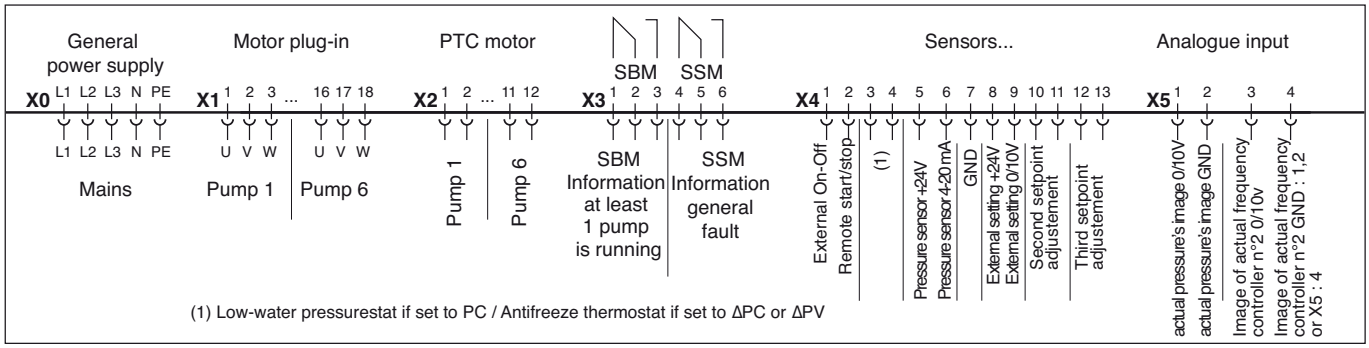

(1) Low-water pressurestat if set to PC / Antifreeze thermostat if set to ΔPC or ΔPV

CC-HVAC electrical connection, star delta startup, with frequency controller

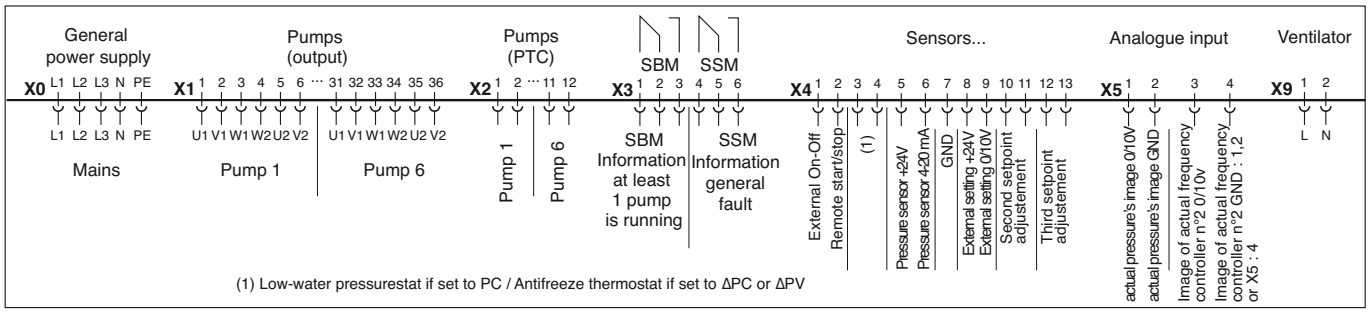

(1) Low-water pressurestat if set to PC / Antifreeze thermostat if set to ΔPC or ΔPV

OPERATING LIMITS

Power supply voltage :	**1~24/230/400V**
Frequency :	**50 & 60 Hz**
Ambient temperature :	**0° to + 60°C**
Tightness, protection :	**IP 20**
EMC (electromagnetic compatibility) :	**EN 61000-6-3 & EN 61000-6-4**

MGP

DRIVING DEVICE
for twin pumps or 2 single pumps

ADVANTAGES

• Multi-purpose use :
- with glandless circulating pumps and glanded circulating pumps,
- for heating or air conditioning,
- usable whatever the motor nominal power.

• Complete functions :
- automatic management of twin units,
- remote control and display of operating and fault statuses.

• Operating safety:
- automatic start-up of the standby pump in case of failure of the operating pump.
- Module protection via a built-in fuse.

• Easy installation :
- Reduced overall dimensions for installation inside an existing cabinet,
- easy electrical connections thanks to the unpluggable terminal blocks.

APPLICATIONS

• Driving of two pumps via power contactors.
• Management of motor faults through thermal relay contacts and/or ipsothermal probes.
• Program adjustment by external clock.

For :
• twin pumps,
• twin circulators,
• twinned single pumps.

For any type of installation: new, old or for modernization.



• MGP module:
driving of two LRL single pumps



• MGP module:
driving of a JRL twin pump

• Unpluggable terminal blocks:
easy electrical connections

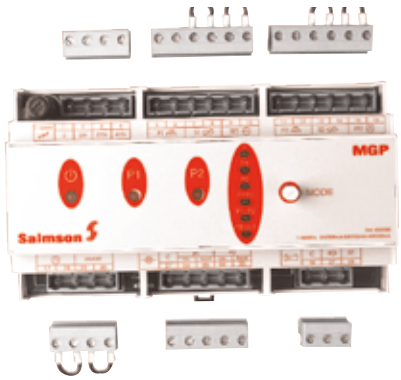

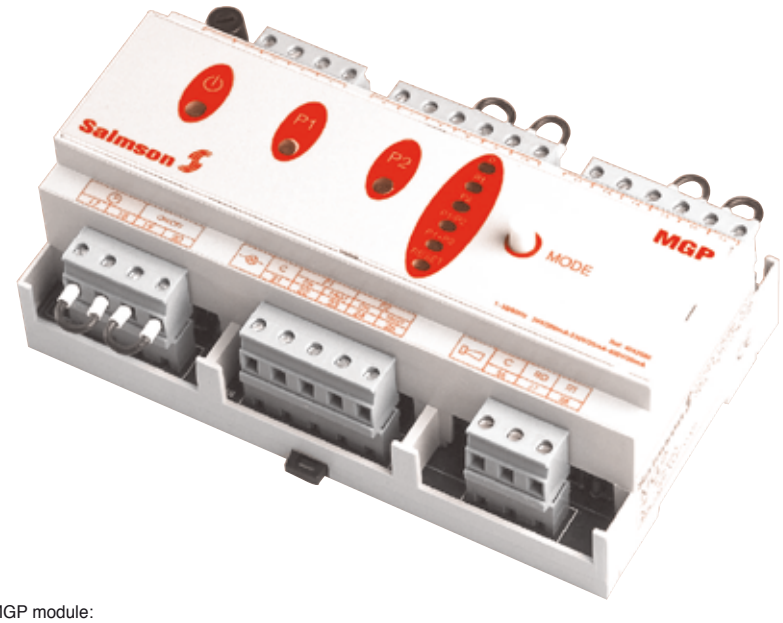

• MGP module:
a single model whatever the motor power

MGP

MAIN FUNCTIONS

A - operating modes

- O : units stopped.
- P1 : forced operation pump No. 1.
- P2 : forced operation pump No. 2.
- P1/P2 : the pumps operate alternately according to the logic state of the external clock control.
- P1+P2 : the pumps operate in parallel, with shutdown of one of the pumps according to the logic state of the external clock control.
- Reset : manual reset of the system after ipsothermic failure of the motor.

B - other functions

- Monitoring of the contact logic state on the thermal relay.
- Monitoring of the contact logic state on the ipsotherms or CTP probes (according to motors).
- Automatic switchover from the operating pump to the standby pump in case of thermal relay fault, on the ipsotherm or the CTP.
- Display of the operating and fault statuses on the module front panel.

Other connections possible :

a) Remote-control start-stop by external dry contact.

b) Remote display of faults and remote alarm by double reversed contact.

- FAULT : normally-open contact (PTF),
- REMOTE ALARM : normally-closed contact (PTO).

C - Display

on cabinet front panel or to GTC :

- of operating statuses,
- of fault statuses, for each pump.

DESIGN

- Electronic box to be installed inside one of the pumping station master cabinets.
- Mounting on 35-mm symmetrical rail (EN 50.022).
- A single model whatever the motor power.
- Box made out of self-extinguishing material.
- Protection IP20.
- Electro-magnetic compatibility (EMC).
- Unpluggable terminal blocks for easy electrical connections.
- Built-in protection fuse.

LUMINOUS INDICATORS

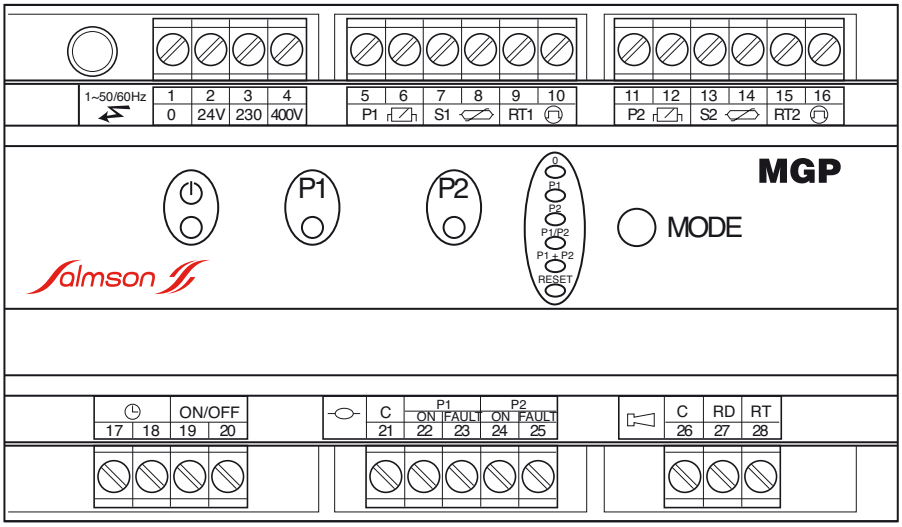

	Voltage present	Yellow
P1	Running	Green
	Fault	Red
P2	Running	Green
	Fault	Red
0 P1 P2 P1/P2 P1 + P2 RESET	Display of "MODE" selection	Yellow
	Thermal fault	Steady red
	Ipsothermal fault	Flashing red

DESCRIPTION OF MGP MODULE

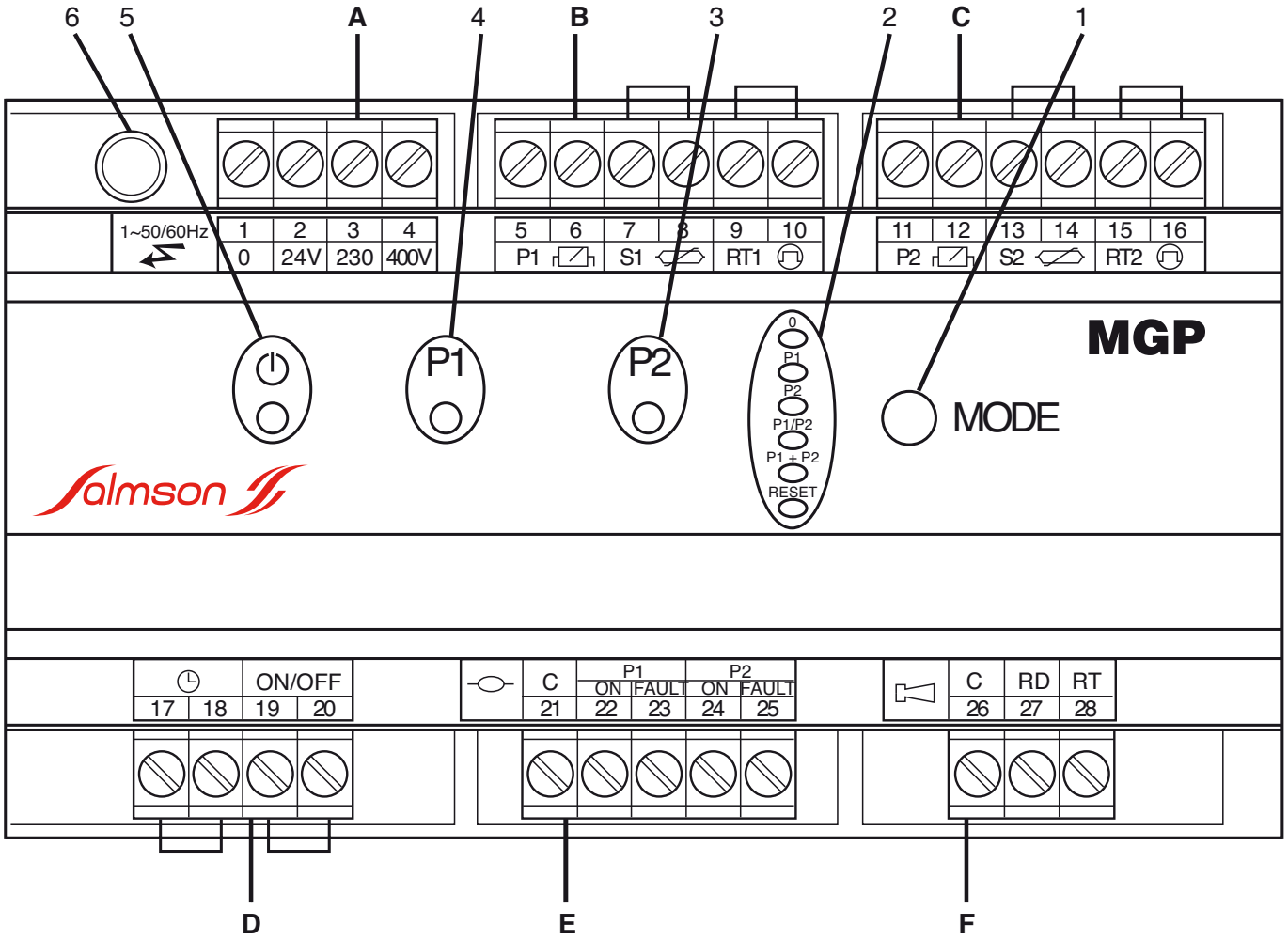

Front panel

1 - Rotary selector switch for operating mode selection
2 - LED indicator lights showing the selected mode
3 - Dual-colour LED indicator light showing operation or fault (resp. green or red) pump No. 2
4 - Dual-colour LED indicator light showing operation or fault (resp. green or red) pump No. 1
5 - LED indicator light showing voltage presence
6 - Protection fuse

Unpluggable connection terminal blocks

A - Power supply terminal block
B - Pump No. 1 terminal block
C - Pump No. 2 terminal block
D - External control terminal block
E - Display terminal block
F - General fault display terminal block

MGP

MGP MODULE: OPERATION DESCRIPTION

The MGP Module ensures the following functions :
- management of twin groups,
- management of information display,
- management of motor faults.

1 - Operating mode choice

Selection is performed by rotating the 'MODE' selector switch (1) until obtaining the desired mode (2), in the following order :

O ► P1 ► P2 ► P1/P2 ► P1+P2 ► RESET

By default, the module is delivered in configuration "O".

Functions :

"O" : both pumps are stopped
"P1" : pump No. 1 operates continuously (pump No. 2 is not on standby)
"P2" : pump No. 2 operates continuously (pump No. 1 is not on standby)
"P1/P2" : the pumps operate alternately according to the logic state of the external clock control, with switchover upon a fault
"P1+P2" : both pumps operate in parallel, with a cyclic shutdown of one of the pumps, according to the logic state of the external clock control, with switchover upon a fault
"RESET" : manual system reset after ipsothermal fault.

Each operating mode change stops the pumps for a few seconds.

2 - Switchover/remote control clock:

The state of the open/closed contact (terminal box (D) - terminals "17" and "18") produced by the external clock controls the operating time of the pumps depending on the mode selected.
The second pump is automatically started if there is a fault on the pump in operation.

Functions :

"P1/P2" : contact closed — P1 only operating
contact open — P2 only operating

Upon stoppage of one of the pumps, the other will start after a time delay of a few seconds.

"P1+P2" : closed contact — both pumps operating in parallel open
contact open — cyclic shutdown of a pump.

The REMOTE CONTROL (terminal block (D) - terminals "19" and "20") enables a remote shutdown of the pumps without changing the selected operating mode nor the cycle programmed by the clock.

3 - Displays - terminal block (E) :

Functions :

They display on the front panel of the pumping station master cabinet, for example, the operating or fault status of each pump.
The displays enable to manage various information items such as the operating time or the number of faults for each pump, etc.

The fault display is general, and does not dissociate a thermal fault from an ipsothermal fault.

4 - Fault display - terminal block (F) :

General fault display that changes status upon detection of thermal or ipsothermal faults on one of the pumps.
Applications are numerous: alarm, indicator light, revolving light, etc.

5 - "Reset" function :

Operation:

The red "RESET" LED indicator light :

- comes on steady upon a thermal fault.
It goes off after resetting the relay or the thermal circuit-breaker associated with the pump.

- comes on flashing upon an ipsothermal fault.
Reset is only possible if the motor temperature has gone back to normal.

To switch off the light and enable start-up: temporarily set the 'MODE' selector switch to 'RESET' (anti-clockwise rotation to the extreme position) then set the switch back to the desired operating mode.

CONNECTION WIRING DIAGRAM

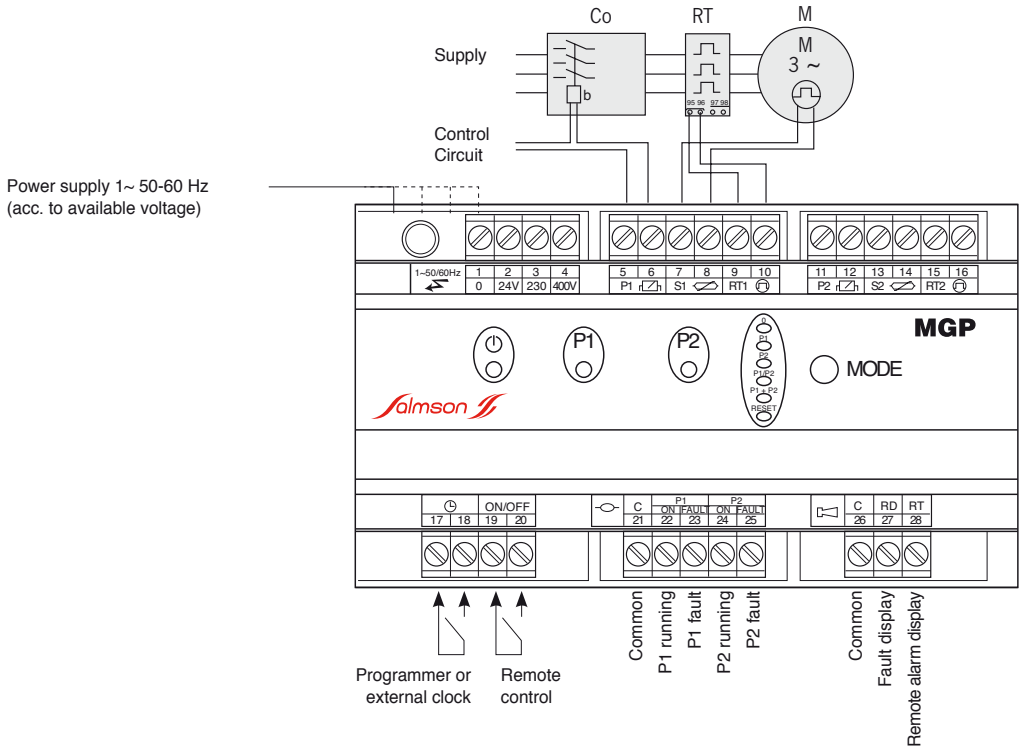

ELECTRICAL CONNECTIONS

1 - Terminal block power supply

Connect the power supply between terminal '1' (common) (terminal block (A)) and that corresponding to the available voltage 24, 230 or 400 V, resp. terminals "2", "3" ou "4".

2 - Pump control and protections

Captions: Co = contactor
b = coil associated to the contactor
RT = thermal relay
M = motor
Supply = power supply

"P1" Control terminal block (B):
output ports "5" et "6".
De-energized contact:
max. voltage = 400V / max. current = 1A
Insert contacts "5" et "6" into the power supply circuit of coil (b) of contactor associated with the pump control.

"P1" protections terminal block (B): input ports "7/9" and "9/10" to be activated by a de-energized external organ.
- **"S1" ipsothermal protection:** connect the pump probe, if any, (bimetal opening upon a fault or CTP) to terminals "7" and "8" in lieu of the shunt provided.

"RT1" thermal protection: connect the auxiliary contact opening upon a fault (normally closed) of the thermal relay associated with the pump to terminals "9" and "10" in lieu of the shunt provided.
"P2" control terminal block (C):
output ports "11" and "12".
De-energized contact:
max. voltage = 400V / max. current = 1A
Insert contacts "11" and "12" into the power supply circuit of coil (b) of contactor associated with the pump control.
"P2" protections terminal block (C): input ports "13/14" and "15/16" to be activated by a de-energized external organ.
"S2" ipsothermal protection: connect the pump probe, if any, (bimetal opening upon a fault or CTP) to terminals "13" and "14" in lieu of the shunt provided.
"RT2" thermal protection: connect the auxiliary contact opening upon a fault (normally closed) of the thermal relay associated with the pump to terminals "15" and "16" in lieu of the shunt provided.

3 - External controls

Terminal Block (D). Input ports "17/18" and"19/20" to be activated by a de-energized external organ.
- Connect the contact of a clock to terminals "17" and "18" in lieu of the shunt provided (positions P1/P2 and P1+P2 only).
- Connect a remote control to terminals "19" and "20" in lieu of the shunt provided.

4 - Displays

Terminal block (E). Output ports "21" (common) and "22/23/24/25".
De-energized contact (dry):
max. voltage = 250V / current = 2A
Terminals "21" and "22": P1 running - Terminals "21" and "23": P1 fault
Terminals "21" and "24": P2 running - Terminals "21" and "25": P2 fault

5 - Fault displays

Output ports "26" (common) and "27/28".
De-energized contact (dry):
max. voltage= 250V / max. current= 2A
Terminals "26" and "27":
normally-open contact (between C and RD)
Terminals "26" and "28":
normally-closed contact (between C and RT).
N.B. : to identify the terminal blocks, see figure under "design and description of the MGP module".

MGP

DIMENSIONS OF BOXES

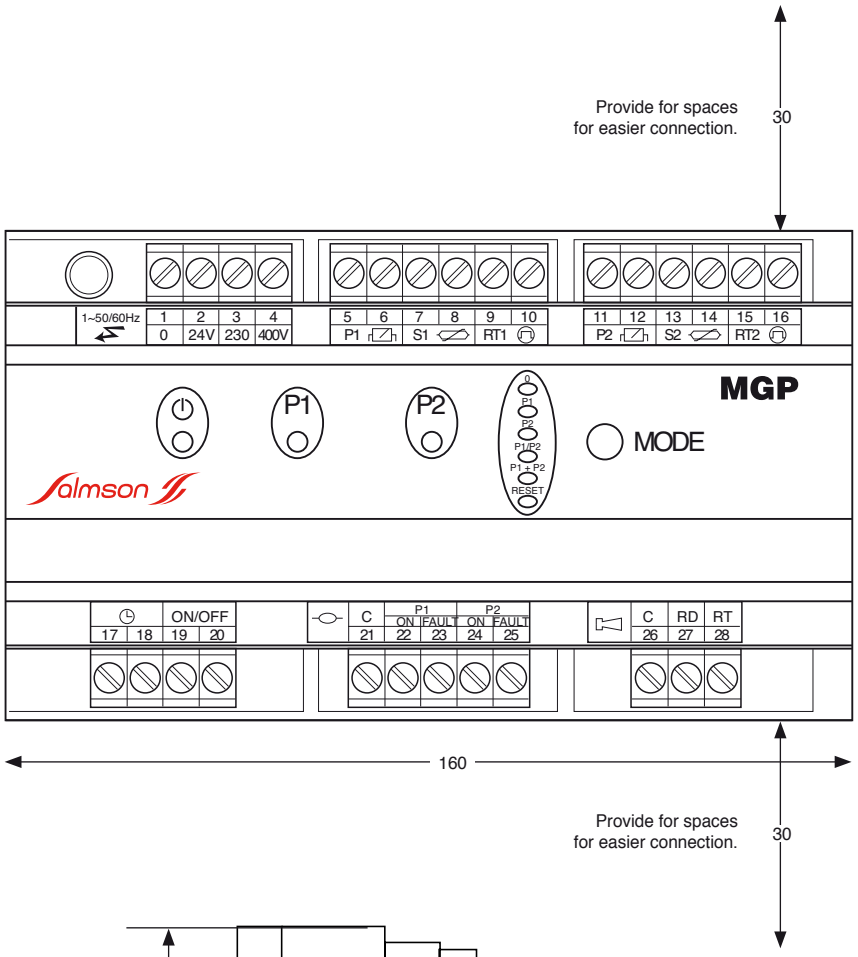

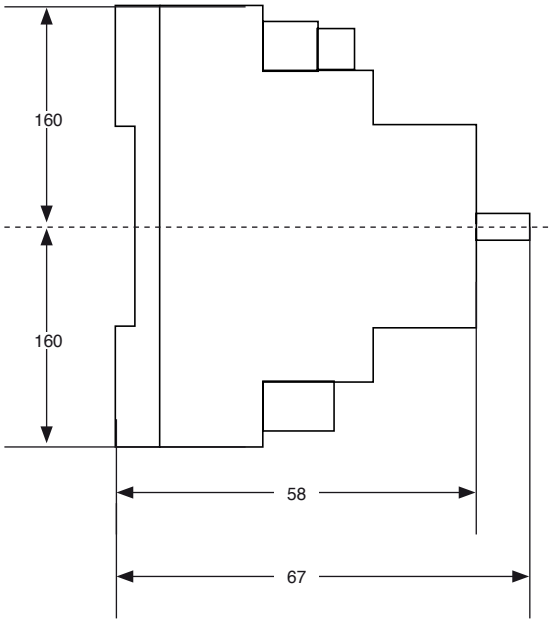

FEATURES

a) Electrical

- Single-phase power supply 24, 230 ou 400V (±10 %).

50-60 Hz

Output ports

Max. U = 400V

Max. I = 1A

Displays

Max. U = 250V

Max. I = 2A

- Connection be unpluggable terminal blocks.
- Input protection by built-in fuse.

b) Mounting

- In a cabinet, on a 35-mm symmetrical rail (EN 50.022).

c) Packaging

Individual packing.

d) Maintenance

- The MGP module does not require any particular servicing.
- Carry out standard replacement of the defective device.

Order reference : 4042680
Attachment : 35-mm symmetrical rails
Cable section : 1 to 1,5 mm²
Tightness/protection : IP20
Weight : 490g

ALARMSON

OVERFLOW ALARM

USE

- Audible alarm.
- Operates when filling.
- Operates when emptying.
- Clean or muddy water

.

APPLICATIONS

Alarm for monitoring water level

- Level overflow: protection against overflow when emptying.
- Level trop bas: protection against running dry when filling.

Clean water, river water…
Muddy water, waste water, sewage, etc.



DESIGN

• Single-phase alarm box 220/230 V - 50/60 Hz

2 Models	Alarmson	réf.: 2529590	weight: 0,85 Kg
	Alarmson-S	réf.: 2529591 with standby capacity of 8 h. max.	weight: 1 Kg
Connexion by cable screws	• Connection to system		
	• Connection to float switch		
	• Connection to remote error report		
Display on front panel	3 lights :	Green (ON)	
		Yellow (ERROR)	
		Red (FAULT)	
Display on side	Push button to inhibit alarm, positioned on the side		
Protection	Fuses		
	Alarmson	1 x dia 5 x 20	1.0 A.
	Alarmson-S	1 x dia 5 x 20	1.0 A.
Connection to mains	Standard EC plug with 1.9m of cable		
Terminal box	Cables held by screws (screws not provided)		
Source	CPU board		
Material of the box	Polycarbonate		
Protection	IP54		

ALARMSON

DIMENSIONS OF BOXES

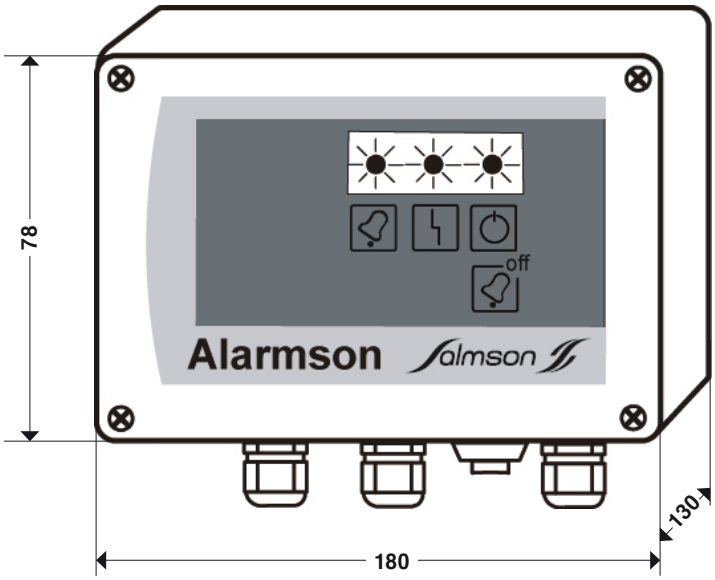

PARTICULAR FEATURES

- Individually packed.
- Alarmson-S: connection to battery made on site.

INSTALLATION & CONNECTION DIAGRAMS

• Emptying mode

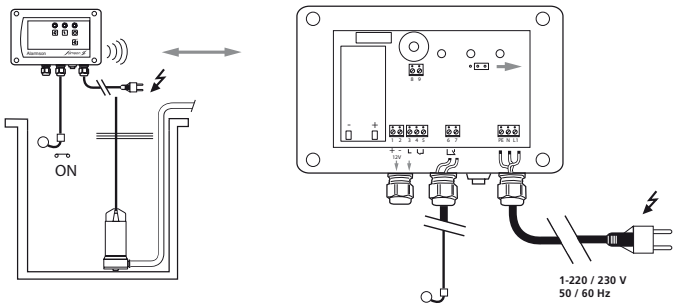

• Filling mode

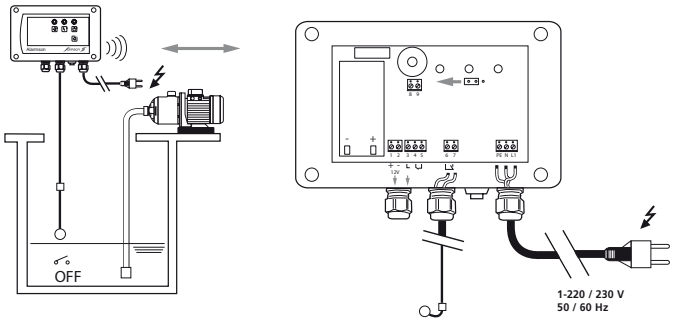

• Version with accumulator

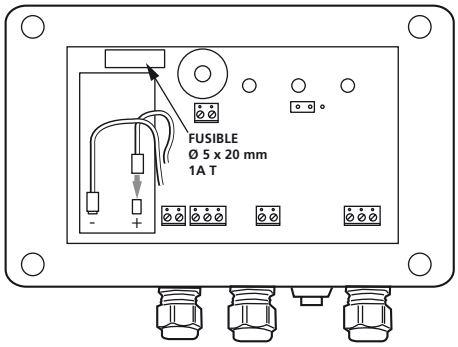

• Version without accumulator

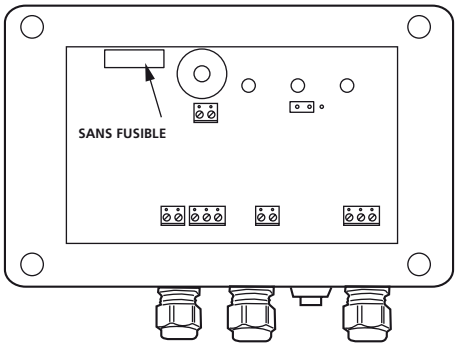

OPERATING LIMITS

Temperature range :	**-10° to + 100°C***
Operating pressure :	**to 20 bar***

* according to models.

TANKS

DIAPHRAGM OR BLADDER TANKS
For expansion and pressure boosting applications

ADVANTAGES

- **Closed vessels removing any risk of evaporation and frost.**
- **Large useful water reserve avoiding starting the pump too often in pressure boosting configuration.**
- **Speedy, easy installation.**

DESIGN

- Horizontal or vertical closed vessel.
- The bladder or diaphragm ensures total separation between water and air.
- It is protected by a strainer at the water inlet.
- The vessel enveloppe is coated (inside and outside) with an anti-corrosion paint.
- Vessels with 2 to 24 litres' capacity are mounted directly on the piping; other models are to be placed on the ground.
- Vessels are in accordance with european standard (PED 97/23/CE).
- Tanks with interchangeable bladder are ACS approved (for potable water).

APPLICATIONS

EXPANSION

For maintaining the pressurization of systems subject to temperature variations by compensation of water expansions.

- For central heating, cooling and air-conditioning systems.

PRESSURE BOOSTING

- **Direct pressure boosting**

A small vessel maintains the pressure in the installation when no delivery is required and protects the pressure controller against pressure variations and water expansion.

- **Conventional pressure boosting**

A large vessel with a large useful water reserve covers the low deliveries required by the installation.





TANKS

EXPANSION : OPERATING PRINCIPLE

• Principle of the diaphragm vessel

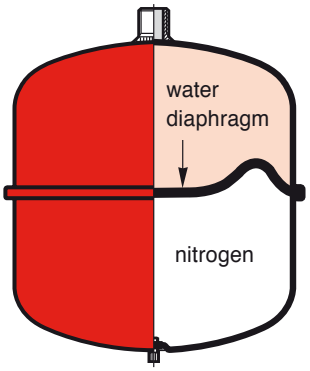

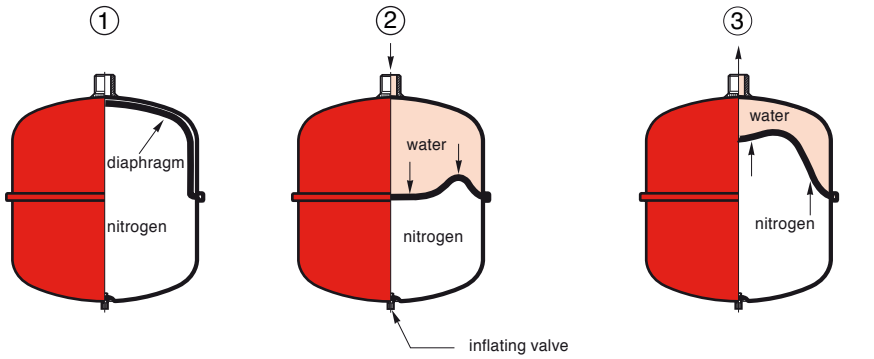

Before the increase in temperature, the pressure inside the vessel balances the installation static pressure. The nitrogen fills the whole vessel volume. The diaphragm remains stuck against the wall.

During the increase in temperature, the water volume in the system increases under the effect of expansion and compresses the diaphragm. The nitrogen volume decreases and the pressure in the installation increases. After the increase in temperature, the final pressure nears the calibration pressure of the safety valve.

When the boiler is shut down, the water in the system cools down and the installation pressure decreases. The water contained in the vessel returns to the system to restore the pressure and the water volume.

• Principle of the bladder vessel

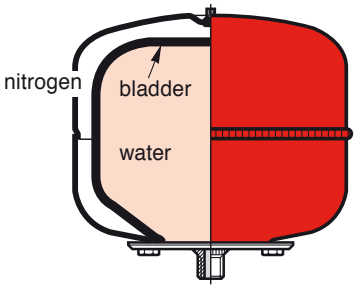

In cooling and air-conditioning installations :

- when the system cools down, the water volume decreases; the expansion vessel returns the water to the system to maintain the pressure.
- upon shutdown, the water at ambient temperature expands, the increased volume of water enters the vessel and compresses the diaphragm.

Theoretical installation volume

Conversion of kW into litres:

heating body	for 1 kW	for installations
Convectors and steel radiators	7 litres	
Cast iron radiators	10 litres	≤ 581 th/h
Hot plates	8,5 litres	
Any heating body	7 litres	> 581 th/h

1 th/hr = 1000 kcal = 1.163 kW.

BASIS FOR COMPUTATION

Hot water system

1 - Expansion volume :

Vexp = Vt x (Cm – Cr)

where :

Vt : total installation volume

Cm : Expansion coefficient at average operating temperature, i.e.:

$$\frac{T° \text{ boiler outlet} + T° \text{ return}}{2}$$

Cr : Expansion coefficient at filling temperature (10° to 12°C)

2 - Total vessel volume :

$$V = \frac{Vt \times (Cm - Cr)}{1 - \frac{P1}{P2}}$$

where :

P1 : effective inflating pression corresponding to the static head + 1 bar*

P2 : valve cracking pressure + 1 bar*

* Corresponding to the atmospheric pressure.

Water expansion coefficients

Temperature	coefficient	Temperature	coefficient
°C		°C	
10°	0,0004	075°	0,0256
20°	0,0018	080°	0,0288
30°	0,0044	085°	0,0322
40°	0,0079	090°	0,0357
50°	0,0119	095°	0,0394
55°	0,0143	100°	0,0431
60°	0,0169	105°	0,0472
65°	0,0196	110°	0,0513
70°	0,0225		

Note : volumes of still cold water submitted to expansion require a food-processing grade expansion system.

APPLICATION : EXPANSION

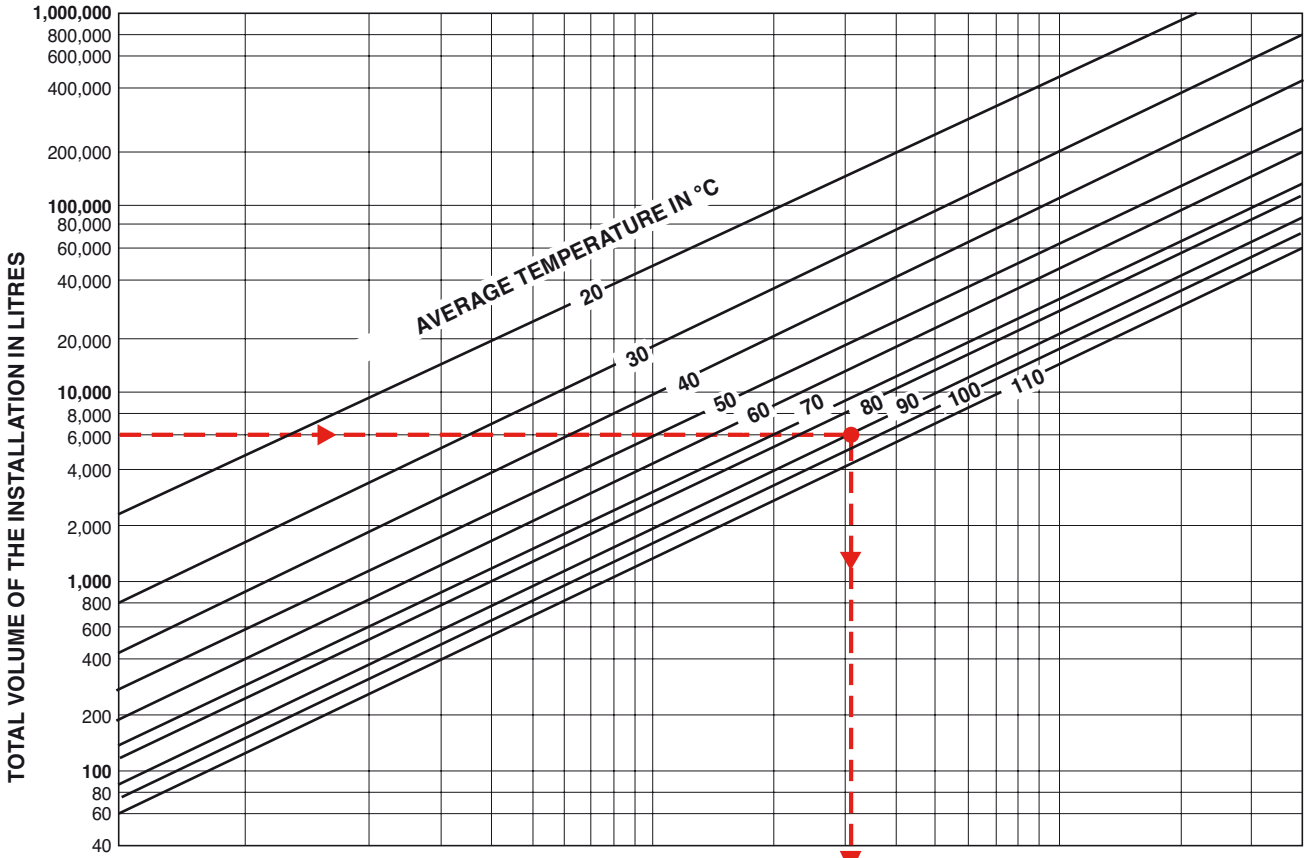

3 bar	5m	6	8	12	18	24	35	50	80	100	150	200	250	300	500	750	1000	1500	2000	3000	4000			
3	10	8	12	18	24	35	50	80	100	150	200	250	300	500	750	1000	1500	2000	3000	4000				
3	15	12	18	24	35	50	80	100	150	200	250	300	500	750	1000	1500	2000	3000	4000					
4	20	12	18	24	35	50	80	100	150	200	250	300	500	750	1000	1500	2000	3000	4000					
4.5	25	24	50	100	150	200	300	500	750	1000	1500	2000	3000	4000										
5	30	24	50	100	150	200	300	500	750	1000	1500	2000	3000	4000										
5.5	35	24	50	100	150	200	300	500	750	1000	1500	2000	3000	4000										
6 bar	40m	24	50	100	150	200	300	500	750	1000	1500	2000	3000	4000										

Static heads in m

Valve cracking pressures in bar (or valve calibration).

NOTE : Above 500 litres, use multiples or add vessels.
For expansion of secondary water systems, hot or cold, use of food-processing grade vessels is mandatory.
These vessels also ensure the safety of systems filled with water and 30% glycol

TANKS

APPLICATION: CONVENTIONAL PRESSURE BOOSTING

Pressures in bar		Vessel volume in litres												
Pe	Pd	8	18	24	50	60	100	200	300	500	750	1000	1500	2000
1,5	2,5	2,2	4,9	6,5	13,6	16,3	27,1	54	81	136	204	271	407	543
1,5	3	2,9	6,4	8,6	17,8	21,4	35,6	71	1071	178	267	356	534	713
2	3	1,9	4,3	5,7	11,9	14,3	23,8	48	71	119	178	238	356	475
2	3,5	2,5	5,7	7,6	15,8	19,0	31,7	63	95	158	238	317	475	633
2,5	3,5	1,7	3,8	5,1	10,6	12,7	21,1	42	63	106	158	211	317	422
2,5	4	2,3	5,1	6,8	14,3	17,1	28,5	57	86	143	214	285	428	570
3	4	1,5	3,4	4,6	19,5	11,4	19,0	38	57	195	143	190	285	380
3	4,5	2,1	4,7	6,2	13,0	15,5	25,9	52	78	130	194	259	389	518
3	5	2,5	5,7	7,6	15,8	19,0	31,7	63	95	158	238	317	475	633
3,5	4,5	1,4	3,1	4,1	18,6	10,4	17,3	35	52	186	130	173	259	345
3,5	5	1,9	4,3	5,7	11,9	14,3	23,8	48	71	119	178	238	356	475
3,5	5,5	2,3	5,3	7,0	14,6	17,5	29,2	58	88	146	219	292	438	585
4	5	1,3	2,9	3,8	17,9	19,5	15,8	32	48	179	119	158	238	317
4	5,5	1,8	3,9	5,3	11,0	13,2	21,9	44	66	110	164	219	329	428
4	6	2,2	4,9	6,5	13,6	16,3	27,1	54	81	136	204	271	407	543
4,5	5,5	1,2	2,6	3,5	17,3	18,8	14,6	29	44	173	110	146	219	292
5	7	1,9	4,3	5,7	11,9	14,3	23,8	48	71	119	178	238	356	475
5	8	2,5	5,7	7,6	15,8	19,0	31,7	63	95	158	238	317	475	633
6	9	2,3	5,1	6,8	14,3	17,1	28,5	57	86	143	214	285	428	570
7	10	2,1	4,7	6,2	13,0	15,5	25,9	52	78	130	194	259	389	518
8	11	1,9	4,3	5,7	11,9	14,3	23,8	48	71	119	178	238	356	475
10	14	2,0	4,6	6,1	12,7	15,2	25,3	51	76	127	190	253	380	507
12	16	1,8	4,0	5,4	11,2	13,4	22,4	45	67	112	168	224	335	447

Triggering pressure (Pd)

Cut-in pressure (Pe)

Note

Vessel capacity is determined according to the pump delivery, cut-in and triggering pressures, and the number of start-ups per hour.

BASIS FOR COMPUTATION

Determine the vessel volume according to the cut-in pressure (Pe), triggering pressure (Pd) and useful water reserve.

Compute the useful water reserve using the following general formula:

$$RU = 16,5 \times \frac{Q}{n}$$

where:

Q: average delivery of a pump l/min.

n: max. number of start-ups per hour (11 to 15).

Example:

Q = 9 m3/hr, i.e. 150 l/min.

n = 11 start-ups/hour max.

Pe = 2 bar.

Pd = 3,5 bar.

Useful water reserve (RU):

$$RU = 16,5 \times \frac{150}{11} = 225 \text{ litres}$$

In the table opposite, look for the vessel volume corresponding to a useful water reserve of 225 litres (or the nearest value), according to pressures Pe and Pd.

Vessel volume:

- 750 litres

Actual useful water reserve:

- 238 litres

Remark

Choose the biggest difference between Pe and Pd, which allows to reduce the vessel volume for a same useful water reserve.

PRESSURE BOOSTING DIMENSIONS

• Pressure boosting tanks with interchangeable bladder

Designation	Order reference	vol.	Operating pressure	Figure	Temp.	Ø	L	D
		litre	bar		°C		mm	mm
RESERV-20L-13B-VT-V-INOX	4043583	20	13	1	max. 100	1"	500	250
RESERV-8L-10B-VT-V	66304	8	10	1	-10 to +100	3/4''	305	220
RESERV-18L-8B-VT-V	66305	18	8	1	-10 to +100	3/4''	375	260
RESERV-24L-8B-VT-V	66306	24	8	1	-10 to +100	1"	485	260
RESERV-50L-10B-VT-V	66307	50	10	2	-10 to +100	1"	720	380
RESERV-100L-10B-VT-V	66308	100	10	2	-10 to +100	1"	880	460
RESERV-200L-10B-VT-V	66338	200	10	2	-10 to +100	1"1/4	1070	590
RESERV-300L-10B-VT-V	66339	300	10	2	-10 to +100	1"1/4	1250	650
RESERV-500L-10B-VT-V	4012233	500	10	2	-10 to +100	1"1/4	1600	750
RESERV-750L-10B-VT-V	4012234	750	10	2	-10 to +50	2"	1820	800
RESERV-1000L-10B-VT-V	4076664	1000	10	2	-10 to +50	2"1/2	2130	800
RESERV-1500L-10B-VT-V	4084235	1500	10	2	-10 to +50	2"1/2	2130	1000
RESERV-2000L-10B-VT-V	4077710	2000	10	2	-10 to +50	DN 65	2550	1100
RESERV-12L-16B-VT-V	4086378	12	16	1	-10 to +100	3/4''	315	265
RESERV-18L-16B-VT-V	4064253	18	16	1	-10 to +100	3/4''	375	265
RESERV-24L-16B-VT-V	4086380	24	16	1	-10 to +100	3/4''	490	265
RESERV-35L-16B-VT-V	4086381	35	16	1	-10 to +100	1"	470	380
RESERV-50L-16B-VT-V	4086382	50	16	2	-10 to +100	1"	720	380
RESERV-60L-16B-VT-V	4086383	60	16	2	-10 to +100	1"	830	380
RESERV-80L-16B-VT-V	4086384	80	16	2	-10 to +100	1"	760	460
RESERV-100L-16B-VT-V	4086385	100	16	2	-10 to +100	1"	880	460
RESERV-150L-16B-VT-V	4086386	150	16	2	-10 to +100	1"	1030	510
RESERV-200L-16B-VT-V	4086387	200	16	2	-10 to +100	1"1/4	1070	590
RESERV-300L-16B-VT-V	4086388	300	16	2	-10 to +100	1"1/4	1250	650
RESERV-500L-16B-VT-V	4086389	500	16	2	-10 to +100	1"1/4	1600	750
RESERV-24L-8B-HZ-V	66309	24	8	3	-10 to +100	1"	485	260
RESERV-50L-10B-HZ-V	66310	50	10	3	-10 to +100	1"	595	380
RESERV-60L-10B-HZ-V	4019423	60	10	3	-10 to +100	1"	720	380
RESERV-100L-10B-HZ-V	66311	100	10	3	-10 to +100	1"	780	460







• Anti-hammer vessels

Designation	Order reference	vol.	Operating pressure	Fig.	Type	Temp.	Ø	L	D
		litre	bar		°C	°C		mm	mm
RESERV-0,16L-20B-VT-M-AB	4015478	0,16	20	4	Membrane	-10 to +100	1/4"	112	84
RESERV-8L-16B-VT-V-AB	4084218	8	16	1	Vessie	-10 to +100	3/4''	310	220



Figure1*
* for connection onto piping

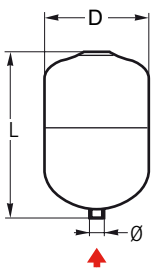

Figure 2

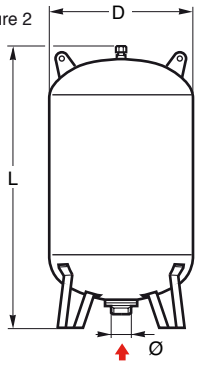

Figure 3

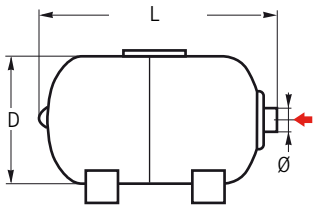

Figure 4*

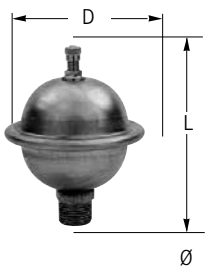

TANKS

EXPANSION DIMENSIONS

• Expansion diaphragm tanks

Designation	Order reference	vol.	Operating pressure	Figure	Temp.	Ø	L	D
		litre	bar		°C		mm	mm
RESERV-6L-4B-VT-M	66284	6	4	1	-10 to +100	3/4"	245	245
RESERV-8L-4B-VT-M	66285	8	4	1	-10 to +100	3/4"	275	245
RESERV-12L-4B-VT-M	66286	12	4	1	-10 to +100	3/4"	320	285
RESERV-18L-3,5B-VT-M	66287	18	3,5	1	-10 to +100	3/4"	385	285
RESERV-24L-3,5B-VT-M	66288	24	3,5	1	-10 to +100	3/4"	420	325
RESERV-35L-5B-VT-M	66289	35	5	2	-10 to +100	3/4"	475	380
RESERV-50L-6B-VT-M	66290	50	6	2	-10 to +100	3/4"	640	380
RESERV-80L-6B-VT-M	66291	80	6	2	-10 to +100	3/4"	690	460
RESERV-100L-6B-VT-M	66292	100	6	2	-10 to +100	3/4"	810	460
RESERV-150L-6B-VT-M	4000155	150	6	2	-10 to +100	1"	970	510
RESERV-200L-6B-VT-M	4000156	250	6	2	-10 to +100	1"	1230	590

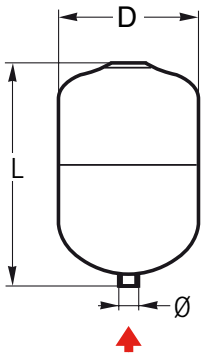

Figure 1*
* for connection onto piping

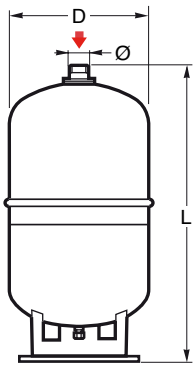

Figure 2

FEATURE

a) Installation

In expansion configuration, on boiler return line, before the circulating pump(s) if installed on the return line.

In pressure boosting configuration, on piping connected to the discharge collector.

Charge pressure.

Charge pressure shall be slightly below :

- the system pressure (after venting), in expansion configuration.
- the cut-in pressure less approx. 0,3 bar, in pressure boosting configuration.

b) Packaging

Vessels are pre-charged with nitrogen (1 or 1,5 bar) and delivered in a cardboard packing or a plastic bag, depending on models.

c) Maintenance

Standard bladder replacement.

ACCESSORIES

- Safety valves with or without pressure gauge.
- Pressure gauge.
- Automatic air vent.

NOTE

For higher installation characteristics, see data sheets specific to expansion modules : EXPANSON.

FEATURES

Cables that are certified ACS for drinking water have a flexible thermoplastic sleeve. The water temperature for these should be between 0°C and 140°C.

Cables not certified for drinking water have a flexible rubber sleeve and can be used in water temperature of min 0°C and max 60°C.

Attention:
The standard submersible pumps in our range can be used only in cold water at 3°C to 30°C. For all other applications, please enquire.

IMMERSON CABLES

Special Immerson cables

OVERVIEW OF THE DIFFERENT CABLES

• For extending the motor cable (sold by the metre)



Appropriate for drinking water.
Cable of 3 or 4 copper cores flexible, certified ACS04 ACC LI021, NFC 15- 100 AD8, BS 6920, IEC 60332-1







Appropriate for non-drinking water.
Cable of 3 or 4 copper cores flexible, meeting standards DIN VDE 0298 Part 3000 and DIN VDE 0282 Part 810







Earth cable usable for drinking water.
Single-core cable certified ACS04 ACC LI021, NFC 15-100 AD8, BS 6920, IEC 60332-1



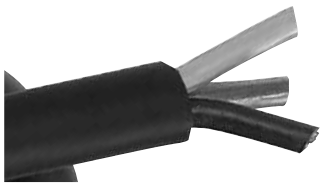



For extending the cable attached to a heat sensor PT100 (on demand)
Non-drinking water (usable only on 6”and 8” motors). Sold by the metre



Flat motor cable
Drinking water, fitted with connectors at each end (one for connexion to the motor, the other for connexion to the QC extension cable) Appropriate for 1-230V and 3-400V, certified ACS. Choice of 1.5m and 2.5m.



IMMERSON CABLES

CHOOSE THE SIZE OF THE CABLE ACCORDING TO THE LENGTH DESIRED

• Direct starting 1~230V/50Hz

Cable cross-section 3 x n mm²

kW	1,5	2,5	4	6	10	16	25	35	50	70	95
0,25	190	320	510	770	126	197	296	399	534	697	875
0,37	120	210	330	500	820	129	195	264	356	468	591
0,55	80	140	230	350	580	900	136	183	245	321	402
0,75	60	110	180	270	440	690	105	143	193	255	323
1,1	40	70	120	190	310	490	750	102	139	186	238
1,5	30	60	100	150	250	400	620	850	118	159	207
2,2	20	40	60	100	170	270	410	560	770	103	132
3,7	-	-	40	60	110	170	260	370	520	710	930

• Direct starting 3~400V/50Hz or 3~380V/60Hz

Cable cross-section 4 x n mm²

kW	1,5	2,5	4	6	10	16	25	35	50	70	95	120	150	185	240	300	400
2,2	120	199	317	472	775	-	-	-	-	-	-	-	-	-	-	-	-
3	90	154	245	364	598	-	-	-	-	-	-	-	-	-	-	-	-
4	69	114	182	271	444	685	-	-	-	-	-	-	-	-	-	-	-
5,5	50	83	130	197	324	509	-	-	-	-	-	-	-	-	-	-	-
7,5	40	66	105	156	257	404	616	-	-	-	-	-	-	-	-	-	-
11	-	45	72	107	176	278	423	577	-	-	-	-	-	-	-	-	-
15	-	-	-	80	132	208	317	452	595	-	-	-	-	-	-	-	-
18	-	-	-	65	107	168	256	348	481	645	-	-	-	-	-	-	-
22	-	-	-	-	90	142	215	295	407	545	704	-	-	-	-	-	-
30	-	-	-	-	-	108	164	223	306	408	522	622	-	-	-	-	-
37	-	-	-	-	-	86	131	179	248	335	434	524	623	-	-	-	-
45	-	-	-	-	-	-	112	152	209	279	358	426	502	580	-	-	-
55	-	-	-	-	-	-	-	124	170	228	293	351	414	481	571	-	-
75	-	-	-	-	-	-	-	-	129	173	223	267	316	367	437	500	583
93	-	-	-	-	-	-	-	-	-	134	172	205	241	279	330	375	433
110	-	-	-	-	-	-	-	-	-	-	145	174	205	237	281	320	370

• Star/delta starting 3~400V/50Hz or 3~380V/60Hz

Cable cross-section 4 x n mm²

kW	1,5	2,5	4	6	10	16	25	35	50	70	90	120	150
2,2	180	299	476	708	1163	-	-	-	-	-	-	-	-
3	135	231	368	546	897	-	-	-	-	-	-	-	-
4	104	171	273	407	666	1028	-	-	-	-	-	-	-
5,5	75	125	195	296	486	764	-	-	-	-	-	-	-
7,5	60	99	158	234	386	606	924	-	-	-	-	-	-
11	-	68	108	161	264	417	635	866	-	-	-	-	-
15	-	-	-	120	198	312	476	678	893	-	-	-	-
18,5	-	-	-	98	161	252	384	522	722	968	-	-	-
22	-	-	-	-	135	213	323	443	611	818	1056	-	-
30	-	-	-	-	-	162	246	335	459	612	783	933	-
37	-	-	-	-	-	129	197	269	371	503	651	786	935

Attention: Cables and connexion must be completely immerged !

IMMERSON CABLES

OR EXTENDING A SUBMERGED PUMP CABLE

• With heat-shrunk junctions or junction boxes

This solution is cheap, the hydraulics and the motor do not need dismantling, and the cables can be extended by the metre.

Appropriate for drinking water. ROUND cable of 3 or 4 flexible copper wires, certified ACS.

Appropriate for non-drinking water. ROUND cable of 3 or 4 flexible copper wires.

Attention: the diameter should be chosen according to the desired length of cable.

Suitable for 3, 4, 6, 8 and 10-inch pumps, the join must be made by a qualified electrician.

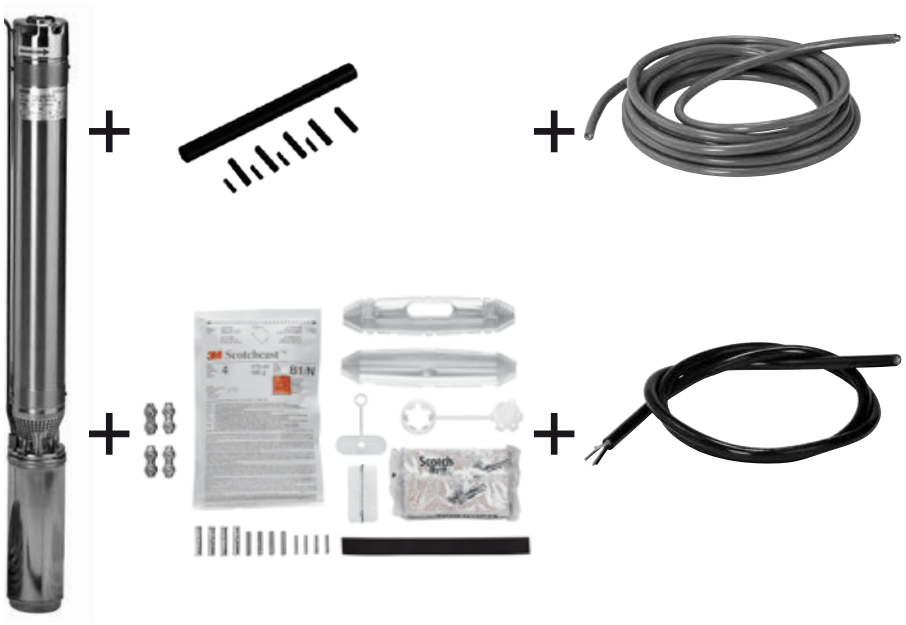

• With the Quick Connect (QC) system



The Franklin connection kit can be ordered Article 4087148



This solution is cheap, the hydraulics and the motor do not need dismantling, and it is fast and simple.

The cable is delivered with the accessories needed to lower the pump into the sump (propylene rope of the same length as the cable) and to fix the cable to the pipework (recommended every 1.5m).

Suitable for Franklin 4-inch electric motors only

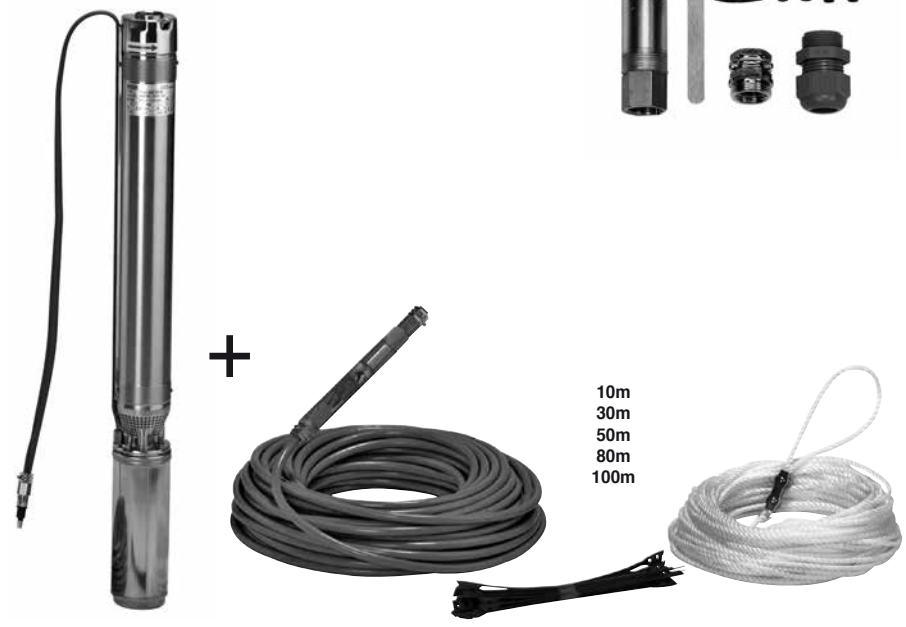

10m
30m
50m
80m
100m



The motor cable can be ordered fitted with a QC plug. (only suitable for Franklin 4-inch electric motors). 1.5m or 2.5m, items 4096206 or 4090207

IMMERSON CABLES

CABLE EXTENSION FOR SUBMERSIBLE PUMP

• With the FLAT motor cable 4x1.5mm² kit

This solution is cheap, the hydraulics and the motor do not need dismantling, and it can be extended by the metre.

To replace the 1.5m motor cable (standard on the Franklin electric 4-inch motors) with a longer motor cable.

Suitable for Franklin 4-inch electric motors only

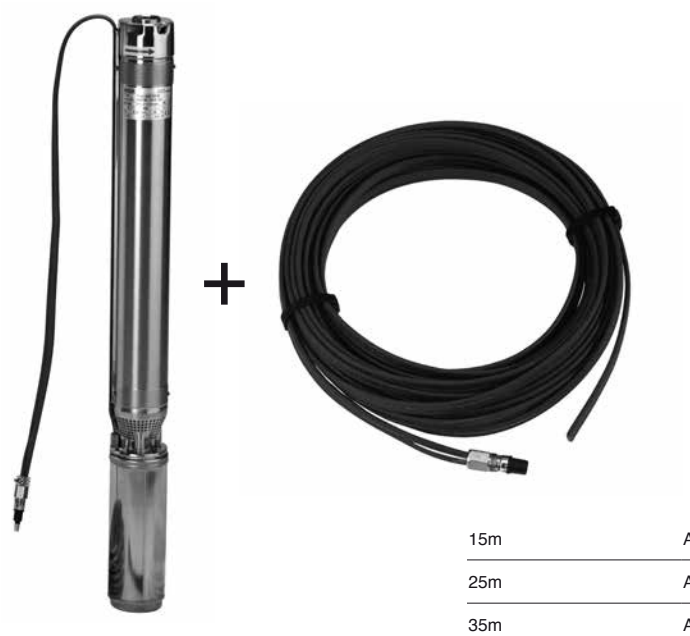

15m	Article 65721
25m	Article 65722
35m	Article 65723
45m	Article 65724

CABLES AND JUNCTIONS

• Cables certified ACS for drinking water

Article-No.	Cross-section (number of wires per mm²)
18156	4 x 1,5
18157	4 x 2,5
18158	4 x 4
18159	4 x 6
18160	4 x 10
18161	4 x 16
4064119	3 x 1,5
4093842	3 x 2,5
4093843	3 x 4
4093844	3 x 6
4093845	3 x 10
4093846	3 x 16
4075939	1G25

Article no 4075939 : earth cable

• Cables not certified ACS

Article-No.	Cross-section (number of wires per mm²)
4094680	4 x 4
4094676	4 x 10
4094668	4 x 16
4046682	4 x 25
4046684	4 x 35
4051974	4 x 50
4093847	4 x 70
4093848	4 x 95
4093849	4 x 120
4093850	3 x 25
4093851	3 x 35
4093852	3 x 50
4093853	3 x 70
4094669	4 x 1

Article no 4094669 : cable for PT100 probe

• QC motor cable kit

Article-No.	Cross-section (number of wires per mm²)
4096206	4x1,5mm2 flat 1,5m
4096207	4x1,5mm2 flat 2,5m

These cables are only for use on 4-inch Franklin brand electric motors for the IMMERSON D4, IS4 and certain IC6s.



www.salmson.com
service.conso@salmson.fr

Espace Lumière - Bâtiment 6
53, boulevard de la République
78403 Chatou Cedex
France

SAP Code : 4193586 - 2015