NEXIS V22/36/52

STAINLESS STEEL VERTICAL HIGH-EFFICIENCY MULTI-STAGE PUMPS
In-line series - 50 Hz

New generation of multi-stage pumps

OPERATING RANGES

Flow rates of up to:	**80 m³/h**
Manometric heads of up to:	**285 m**
Max. delivery pressure:	**16, 25 & 30 bar**
Max. suction pressure:	**10 bar**
Temperature range:	**– 20° à + 120°**C**
Max. ambient temperature:	**+50°C Depending on the application**
DN of ports:	**50 to 80**
Reference MEI*:	**≥ 0,70**

*Minimum Efficiency Index

** according to mechanical seal

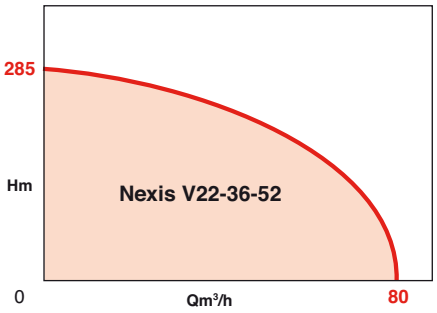

APPLICATIONS

Pumping of clean, non-muddy liquids in the housing, industrial and agricultural sectors:
- Supply - Boosting
- Watering - Irrigation
- High-pressure washing
- Water treatment (demineralisation, filtration)
- Fire protection
- Heating - Air conditioning

And for incorporation into all modular systems.

Pumped fluids

- **Standard range - 1.4307 stainless steel hydraulics (304L)**: clear and non-corrosive liquids (drinking water, glycol water, etc.)
- **Corrosive water range - hydraulics 1.4404 (316L) stainless steel**: (seawater, demineralised water, chlorinated water, etc)

ADVANTAGES

HIGH EFFICENCY
- High-efficiency stainless steel laser-welded impellers and stages: 1.4307 (AISI 304L), laser protective atmosphere (for better corrosion resistance over time).
- IEC ≥ IE2 standard motor.

INSTALLATION
- Easy installation: in-line ports, mobile flanges.
- Modular pump housing: possible to adapt the height and flanges to fit existing systems.
- Adjustable lantern ring and terminal box (several positions on request).
- Hoisting mechanism for easier maintenance.

MAINTENANCE
- Optional XCare integral protective module for monitoring the pump.
- Easy maintenance:
- Standard mechanical seals available for the entire range for temperatures up to 120 ° C.
- Spacer concept available on all models with motor weight ≥ 40 kg . Allows the installer or operator to replace the mechanical seal without disassembling the moteur.

Certified ACS

• Option de protection intégrée X-Care

• Optimised 2D/3D high-efficiency hydraulics

• Cartridge mechanical seal Standard seal

• Mobile flanges and modular construction Easy installation

• **Nexis V5200**
All-1.4307 (304L) stainless steel hydraulic assembly

• **Nexis V2200**
All-1.4404 (316L) stainless steel hydraulic assembly

NEXIS V22/36/52

DESIGN

• Hydraulic part

- Centrifugal. Multi-stage, 1 to 16 stages.
- Vertical axis, in-line suction/delivery orifices in the lower part.
- Flanged housing in PN 16, PN 25 and PN 40 for 30 bar versions.
- Reliability of product ensured by one or more intermediate bearings.
- Standardised mechanical seal ensures leak-tightness of the shaft passage.
- Shaft protected from corrosion by a 316L stainless steel sleeve underneath the mechanical seal.
- Housing and hydraulics assembly assembled by stud bolts.

• Motors

- IEC ≥ IE2. Standard ventilated.
- Flanges and shaft end compliant with IEC standard optimized to gain some space on motor power.
- Connected to pump by coupling with safety guards.

Rotation speed:	2950 tr/mn
4 kW 3~ winding :	230-400 V
above 3~ :	400 V
Frequency :	50 Hz (option 60 Hz)
Insulation class:	155° C (Classe F)
Protection class:	IP 55

Legend : 2-pole motor Ⓜ

BASIC CONSTRUCTION

Main parts	Material	Material
liquids	non-corrosive	corrosive
models	all	all
Suction - discharge housing.	EN GJL 250 cast iron	1.4409 stainless steel (AISI 316L)
Upper motor lantern ring	EN GJL 250 cast iron	EN GJL 250 cast iron
Impellers	1.4307 stainless steel (AISI 304L)	1.4404 stainless steel (AISI 316L)
Cells (stage housing)	1.4307 stainless steel (AISI 304L)	1.4404 stainless steel (AISI 316L)
External pipe sleeve	1.4307 stainless steel (AISI 304L)	1.4404 stainless steel (AISI 316L)
Pump shaft	1.4057 stainless steel (AISI 431)	1.4404 stainless steel (AISI 316L) 1.4462 stainless steel (AISI F51)
Intermediate bearing	Tungsten carbide	Tungsten carbide
Mechanical seal	Si carbide/ Carbon* or Tungsten carbide/ Carbon	Si carbide/ Carbon* or Tungsten carbide/Carbon
Joints toriques	EPDM (120°C) (FKM à la demande)	FKM (Viton 90°C) (EPDM à la demande)
O-rings	1.4404 stainless steel (AISI 316L)	1.4404 stainless steel (AISI 316L)

NOTA :
*** Option :** Si carbide/ Si carbide seal.
**** Option :** certain variants are made of 1.4462 stainless steel

CONSTRUCTION DES NEXIS V

NEXIS V22/36/52

IDENTIFICATION

Nexis V2202/2-OGE/KS/400-50-FF240/XXXX/B

Pump family

Nominal flowrate in m³/h (at 50 Hz / 2 poles)

Number of impellers

/1 or /2: number of trimmed impellers out of the total number of impellers e.g. 2202/2, 2 trimmed impellers out of 2

O = PN16 round flanges
F = PN25 round flanges
T = PN40 round flanges

G = EN GJL-250 cast iron pump housing + 304L stainless steel hydraulics
X = 1.4409 stainless steel pump housing + 316L stainless steel hydraulics
B = one-piece pump housing made of non-certified cataphoresis-treated cast-iron (GJL-250) drinking water + 304L stainless steel hydraulics
D = Monobloc pump casiong cast electro-phoresis approved drinking water + 304L stainless steel hydraulics

E = O-rings: EPDM
V = O-rings: FKM (VITON)

Version index

Variant
nothing = no option
EC = collective packaging
XXXX = customisation

Lantern ring size option
Nothing = standard lantern ring

Motor frequency
50 hz / 60 hz

Motor voltage
(in V)

K = cartridge mechanical seal
S = System» orientation (booster pump)
X = version with integral XCare protective module

PRESENTATION OF ALTERNATIVE CONSTRUCTION

Flow-Flange	P max Mechanical seal	restriction power	Cartridge	Orientation	Materials Pumps (Expanded Standard)															
					Cast iron cataphoresis casing and 304 stainless steel hydraulic CODE: G				316L stainless steel casing and hydraulic CODE: X				Cast iron cataphoresis one-piece casing and 304 stainless steel hydraulic CODE: D/B*				CODES PUMP OPTIONS MSO			CODES MOTOR OPTIONS MSO
					EPDM : Mechanical seal + gaskets		VITON : Mechanical seal + gaskets		EPDM : Mechanical seal + gaskets		VITON : Mechanical seal + gaskets		EPDM : Mechanical seal + gaskets		VITON : Mechanical seal + gaskets					
					E	E + Q1Q1	V	V + Q1Q1	E	E + Q1Q1	V	V + Q1Q1	E	E + Q1Q1	V	V + Q1Q1	P1 / SILFREE (EPDM)	Q7Q7 (EPDM)	RAL...	
22 m³ - DN50	O : 16bars	V : 3kW≥ ... <= 11kW VE : 3kW≥ ... ≥ 7,5kW		S																
36 m³ - DN65			K	KS																
	F : 25bars		K	KS																
52 m³ - DN80	T : 30bars		K	KS																
					Delivery : see below												Delivery : on demand			

ITEM STANDARD (deadline: on stock or 10 days worked LOUVERNE and 11 working days to UNNA)

ARTICLE AVAILABLE ON DEMAND (deadline extended to standard : 15 days worked in LOUVERNE and Unna)

NON AVAILABLE

NEXIS V22/36/52

HYDRAULIC PRE-SELECTION RANGES NEXIS-V - 2 POLES - 50 HZ

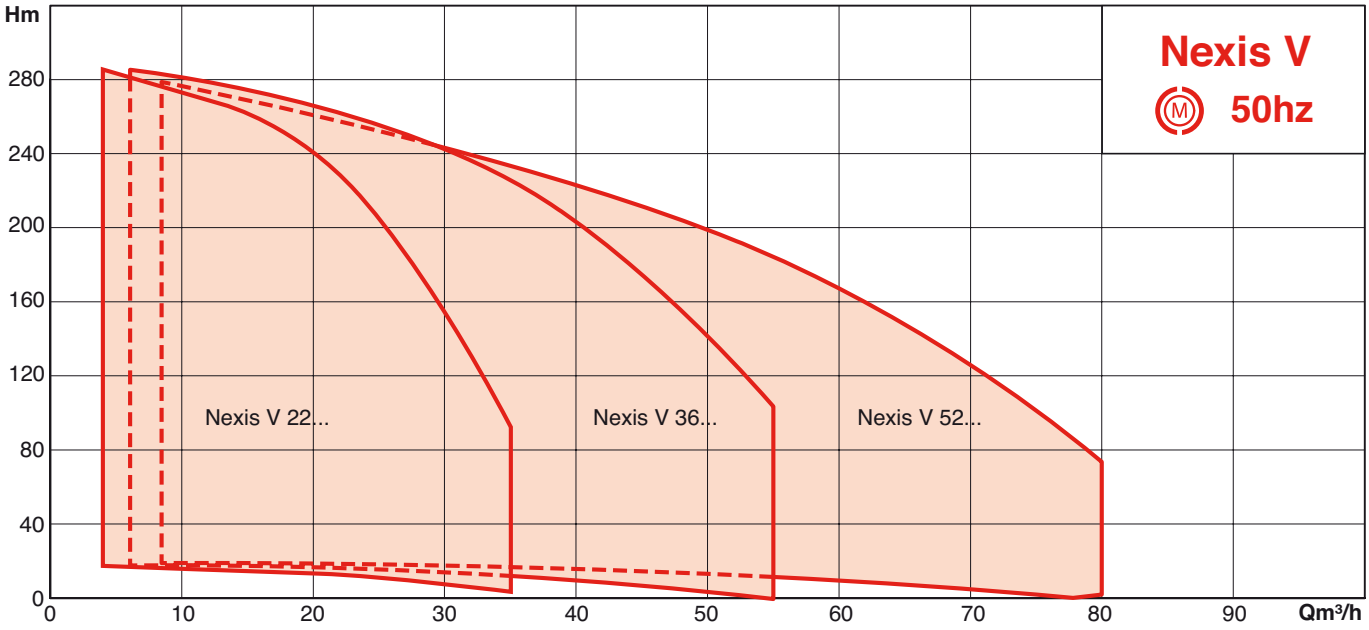

SECTIONAL DIAGRAM - NEXIS-V 22

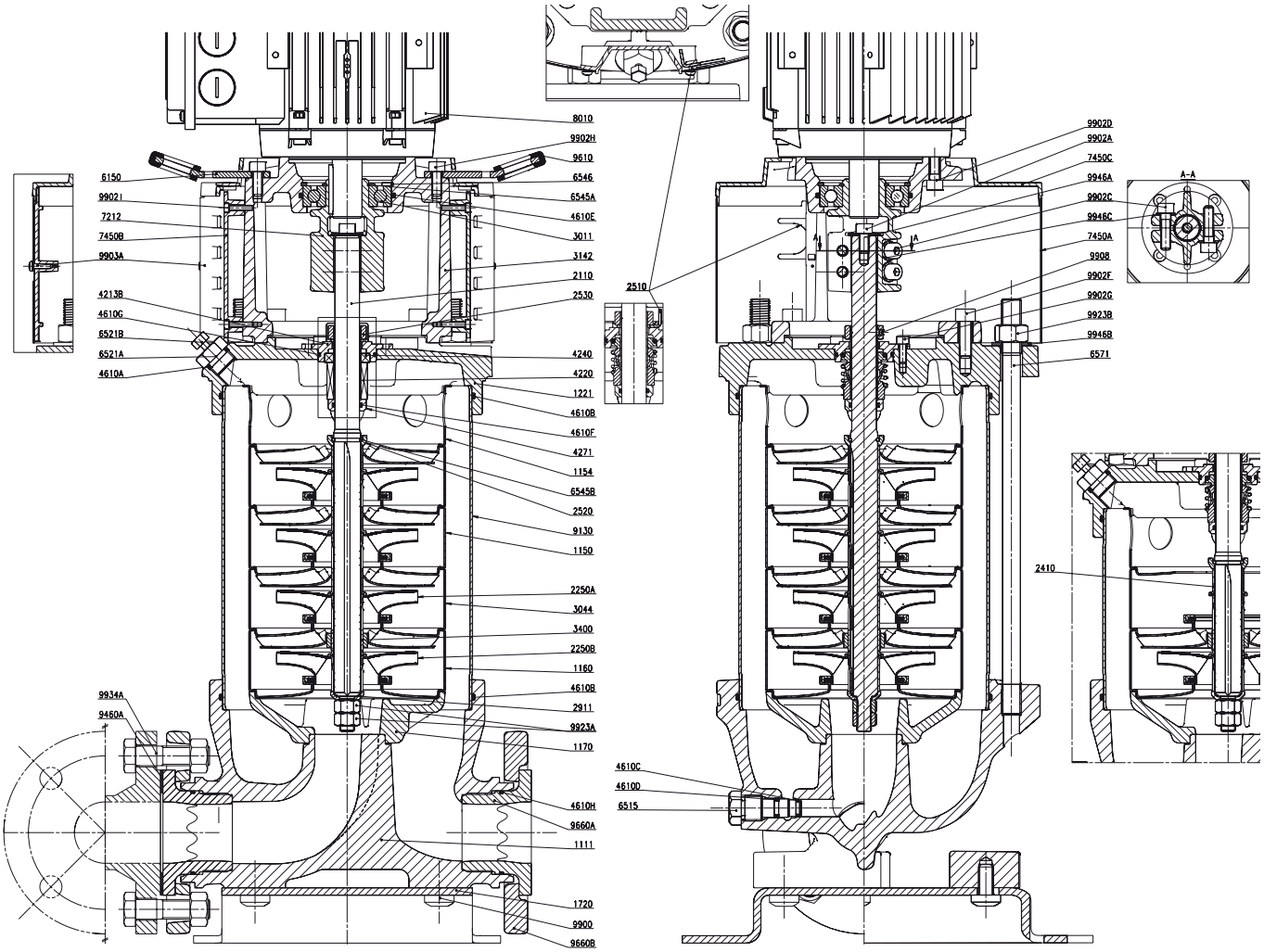

PARTS LIST

1111	Pump housing
1150	Stage housing with interstage crossover
1154	Centring device without interstage crossover
1160	Stage housing without interstage crossover
1170	Hydraulic mount
1221	Upper shroud
1720	Sole plate
2110	Pump shaft
• 2250a	Long impeller
• 2250b	Short impeller
2410	Hub
2510	Mechanical seal adjusting yoke
2520	Support ring
2530	Drive collar
2911	Lower shaft end washer
3011	Lantern ring ball bearing
3044	Stage housing with intermediate bearing and interstage crossover
3142	Lantern ring
• 3400	Shaft sleeve
• 4220+4240	Standard mechanical seal
4271	Sleeve underneath seal
• 4610a	Bleeder plug gasket
• 4610b	O-ring for pipe sleeve
• 4610c	Drain and priming plug gasket
• 4610d	Drain and priming plug gasket
• 4610e	Bearing gasket
4610f	O-ring for sleeve underneath seal
4610g	O-ring for seal disc pad holder
4610h	O-ring for gasket surface
6150	Handling plate
6515	Drain and priming plug
6521	Filler - bleeder plug
6545a	Shaft circlip
6545b	1/2 snap ring
6546	Circlip
6548	Shaft snap ring
6571	Assembly stud bolt
7212	Coupling
7450a	Coupling guard plate
7450b	Plastic mount
7450c	Upper protective cover
• 8010	Flanged motor
9130	External sealing pipe sleeve
9460a	Flat backflange gasket
9610	Lifting ring protector
9660a	Screw-on gasket surface
9660b	Mobile flange
9900	Sole plate/housing attachment screw
9902a	Upper shaft end screw
9902c	Coupling screw
9902d	Motor attachment screw
9902f	Lantern ring/shroud attachment screw
9902g	Cartridge attachment screw
9902i	Plastic mount screw
9903	Protective screw
9908	Collar attachment screw
9923a	Lower shaft end nut
9923b	Assembly stud bolt nut
9923c	Motor attachment screw
9934a	Backflange bolt
9946a	Flat washer
9946b	Contact ring
9946c	Narrow contact ring

• Recommended spare parts

NEXIS V22/36/52

PLAN-COUPE DE PRINCIPE - NEXIS V 36

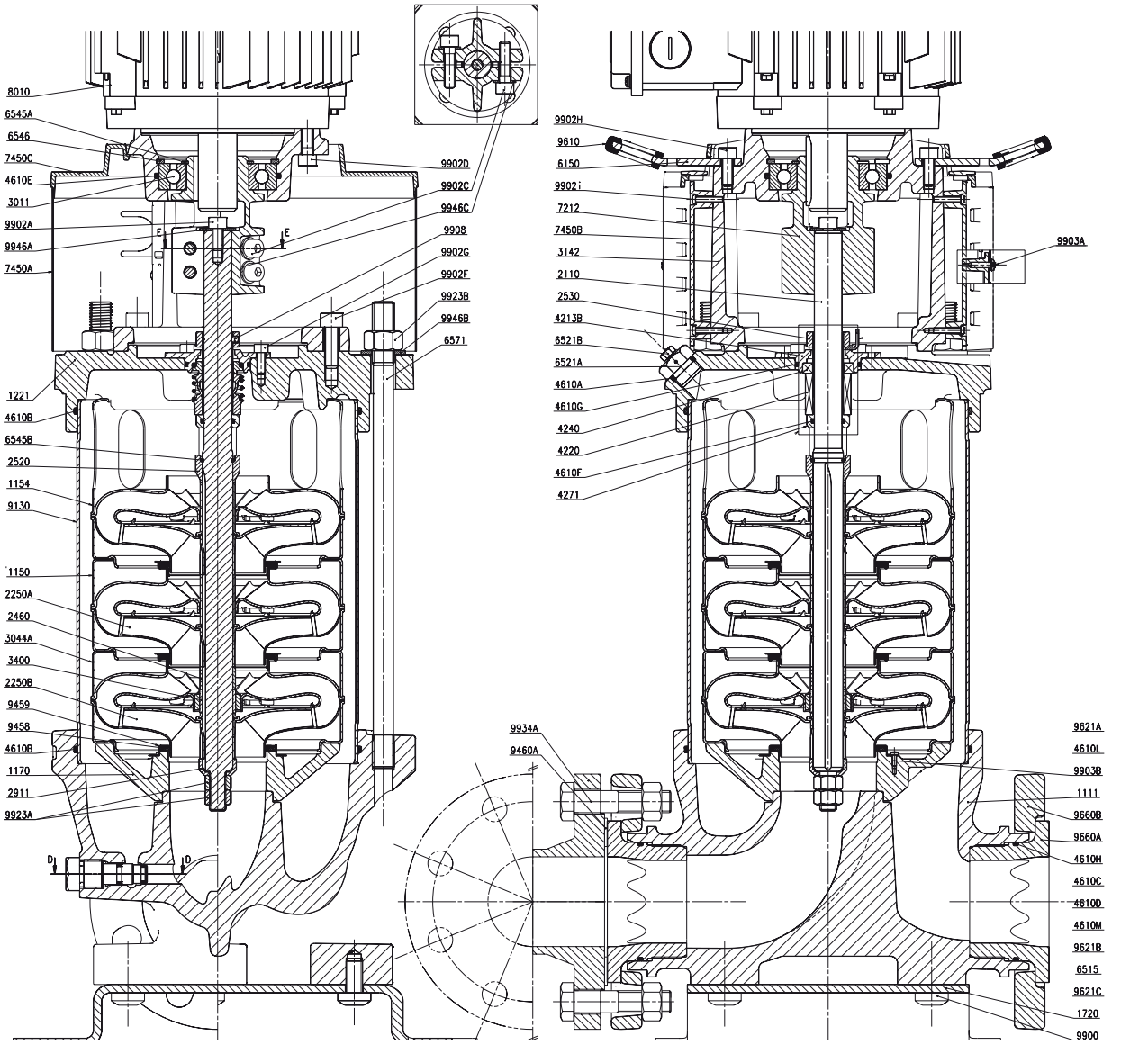

PARTS LIST

1111	Pump housing
1150	Stage housing with interstage crossover
1154	Centring device without interstage crossover
1160	Stage housing without interstage crossover
1170	Hydraulic mount
1221	Upper shroud
1720	Sole plate
2110	Pump shaft
• 2250a	Long impeller
• 2250b	Short impeller
2410	Hub
2510	Mechanical seal adjusting yoke
2520	Support ring
2530	Drive collar
2911	Lower shaft end washer
3011	Lantern ring ball bearing
3044	Stage housing with intermediate bearing and interstage crossover
3142	Lantern ring
• 3400	Shaft sleeve
• 4220+4240	Standard mechanical seal
4271	Sleeve underneath seal
• 4610a	Bleeder plug gasket
• 4610b	O-ring for pipe sleeve
• 4610c	Drain and priming plug gasket
• 4610d	Drain and priming plug gasket
• 4610e	Bearing gasket
4610f	O-ring for sleeve underneath seal
4610g	O-ring for seal disc pad holder
4610h	O-ring for gasket surface
6150	Handling plate
6515	Drain and priming plug
6521	Filler - bleeder plug
6545a	Shaft circlip
6545b	1/2 snap ring
6546	Circlip
6548	Shaft snap ring
6571	Assembly stud bolt
7212	Coupling
7450a	Coupling guard plate
7450b	Plastic mount
7450c	Upper protective cover
• 8010	Flanged motor
9130	External sealing pipe sleeve
9460a	Flat backflange gasket
9610	Lifting ring protector
9660a	Screw-on gasket surface
9660b	Mobile flange
9900	Sole plate/housing attachment screw
9902a	Upper shaft end screw
9902c	Coupling screw
9902d	Motor attachment screw
9902f	Lantern ring/shroud attachment screw
9902g	Cartridge attachment screw
9902i	Plastic mount screw
9903	Protective screw
9908	Collar attachment screw
9923a	Lower shaft end nut
9923b	Assembly stud bolt nut
9923c	Motor attachment screw
9934a	Backflange bolt
9946a	Flat washer
9946b	Contact ring
9946c	Narrow contact ring

• Recommended spare parts

PLAN-COUPE DE PRINCIPE - NEXIS V 52

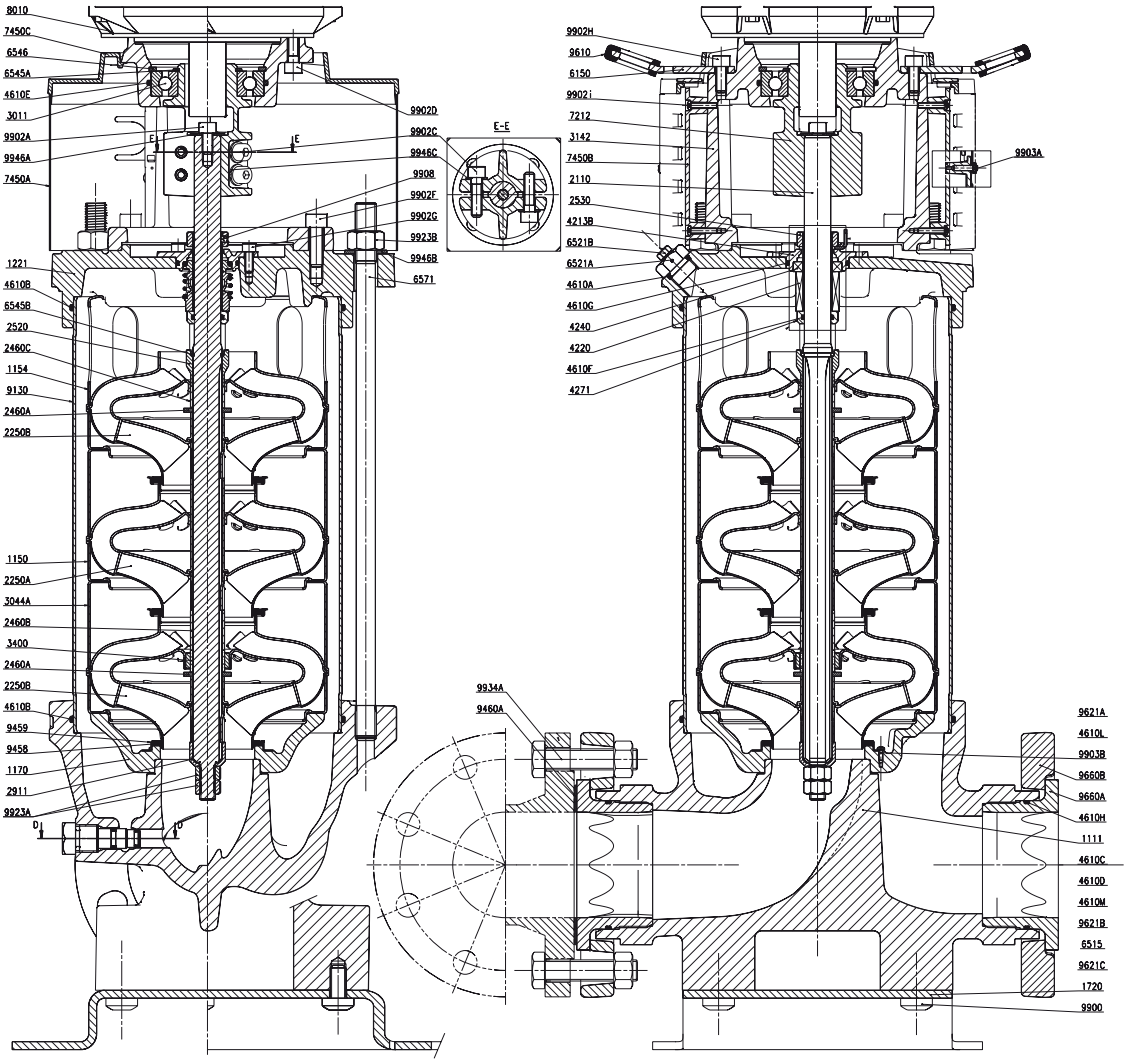

PARTS LIST

1111	Pump housing
1150	Stage housing with interstage crossover
1154	Centring device without interstage crossover
1160	Stage housing without interstage crossover
1170	Hydraulic mount
1221	Upper shroud
1720	Sole plate
2110	Pump shaft
• 2250a	Long impeller
• 2250b	Short impeller
2410	Hub
2510	Mechanical seal adjusting yoke
2520	Support ring
2530	Drive collar
2911	Lower shaft end washer
3011	Lantern ring ball bearing
3044	Stage housing with intermediate bearing and interstage crossover
3142	Lantern ring
• 3400	Shaft sleeve
• 4220+4240	Standard mechanical seal
4271	Sleeve underneath seal
• 4610a	Bleeder plug gasket
• 4610b	O-ring for pipe sleeve
• 4610c	Drain and priming plug gasket
• 4610d	Drain and priming plug gasket
• 4610e	Bearing gasket
4610f	O-ring for sleeve underneath seal
4610g	O-ring for seal disc pad holder
4610h	O-ring for gasket surface
6150	Handling plate
6515	Drain and priming plug
6521	Filler - bleeder plug
6545a	Shaft circlip
6545b	1/2 snap ring
6546	Circlip
6548	Shaft snap ring
6571	Assembly stud bolt
7212	Coupling
7450a	Coupling guard plate
7450b	Plastic mount
7450c	Upper protective cover
• 8010	Flanged motor
9130	External sealing pipe sleeve
9460a	Flat backflange gasket
9610	Lifting ring protector
9660a	Screw-on gasket surface
9660b	Mobile flange
9900	Sole plate/housing attachment screw
9902a	Upper shaft end screw
9902c	Coupling screw
9902d	Motor attachment screw
9902f	Lantern ring/shroud attachment screw
9902g	Cartridge attachment screw
9902i	Plastic mount screw
9903	Protective screw
9908	Collar attachment screw
9923a	Lower shaft end nut
9923b	Assembly stud bolt nut
9923c	Motor attachment screw
9934a	Backflange bolt
9946a	Flat washer
9946b	Contact ring
9946c	Narrow contact ring

• Recommended spare parts

NEXIS V22/36/52

PLAN-COUPE DE PRINCIPE - LANTERNE AVEC SPACER ET CARTOUCHE

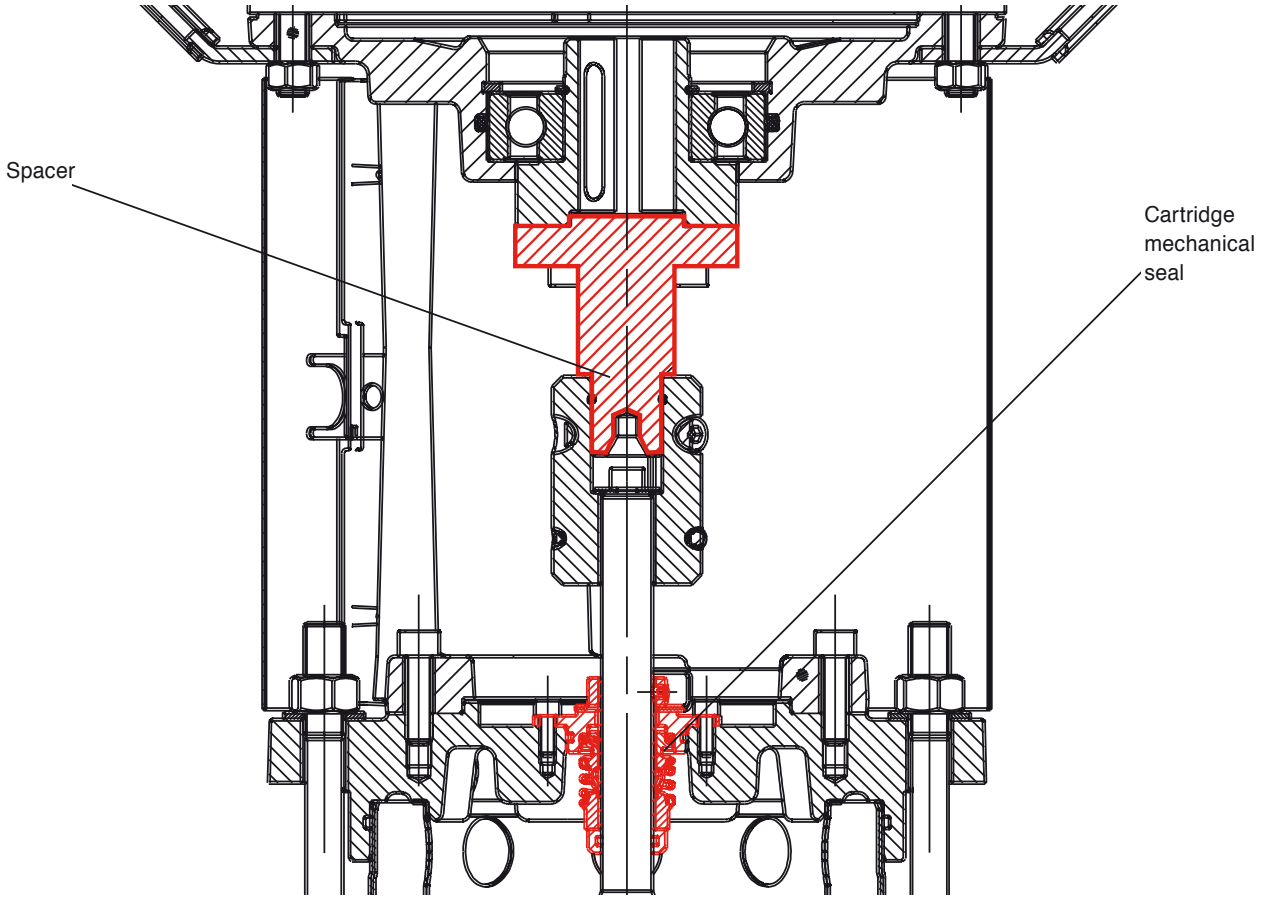

- **«Spacer» function**
  For motors with power of 7.5 kW or above, Nexis pumps are equipped with a removable part mounted between the motor shaft, the coupling and the hydraulic shaft. This part, called a «spacer», ensures that there is sufficient room to remove the mechanical seal without having to remove the motor.

.

- **Cartridge mechanical seal**
  Cartridge mechanical seal In addition, the mechanical seals are built into a compact and robust cartridge which allows for quick, easy and tool-free maintenance (see details on next page)

- **Product plus points**
  The combination of a spacer and cartridge mechanical seal divides maintenance time by three and separates maintenance from any intervention on the hydraulic part

PRINCIPLE OF THE CARTRIDGE SEAL

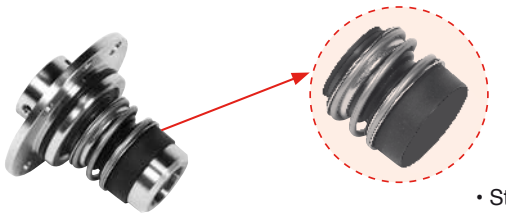

• Salmson cartridge mechanical seal

• Standard seal

Seal characteristics

As standard
- SiC/C or CW/C seal
- EPDM gasket

Optional
- SiC/SiC seal and/or
- Viton gasket

Benefits

- Removable cartridge for replacement of the worn part only
- Easy extraction of the seal (housings provided for extraction screws)
- Adjustment shim placed in the lantern ring .

XCARE: INTEGRAL PUMP PROTECTION (OPTION)

• Nexis-V2206 equipped with integral X-Care protection option

Transmission of signals for communication by the Building Management System/ Centralised Technical Management System and targeted pump control:
- Built-in protection against dry running
- Built-in monitoring of the pump:
  - Rotation
  - Pressure
  - Ambient temperature
  - Number of hours of operation
  - Number of stops & starts
- Interfaces
  - IR
  - CAN

NEXIS V22/36/52

HYDRAULIC PERFORMANCES AT REAL SPEED (AROUND 2900 RPM) - NEXIS V22

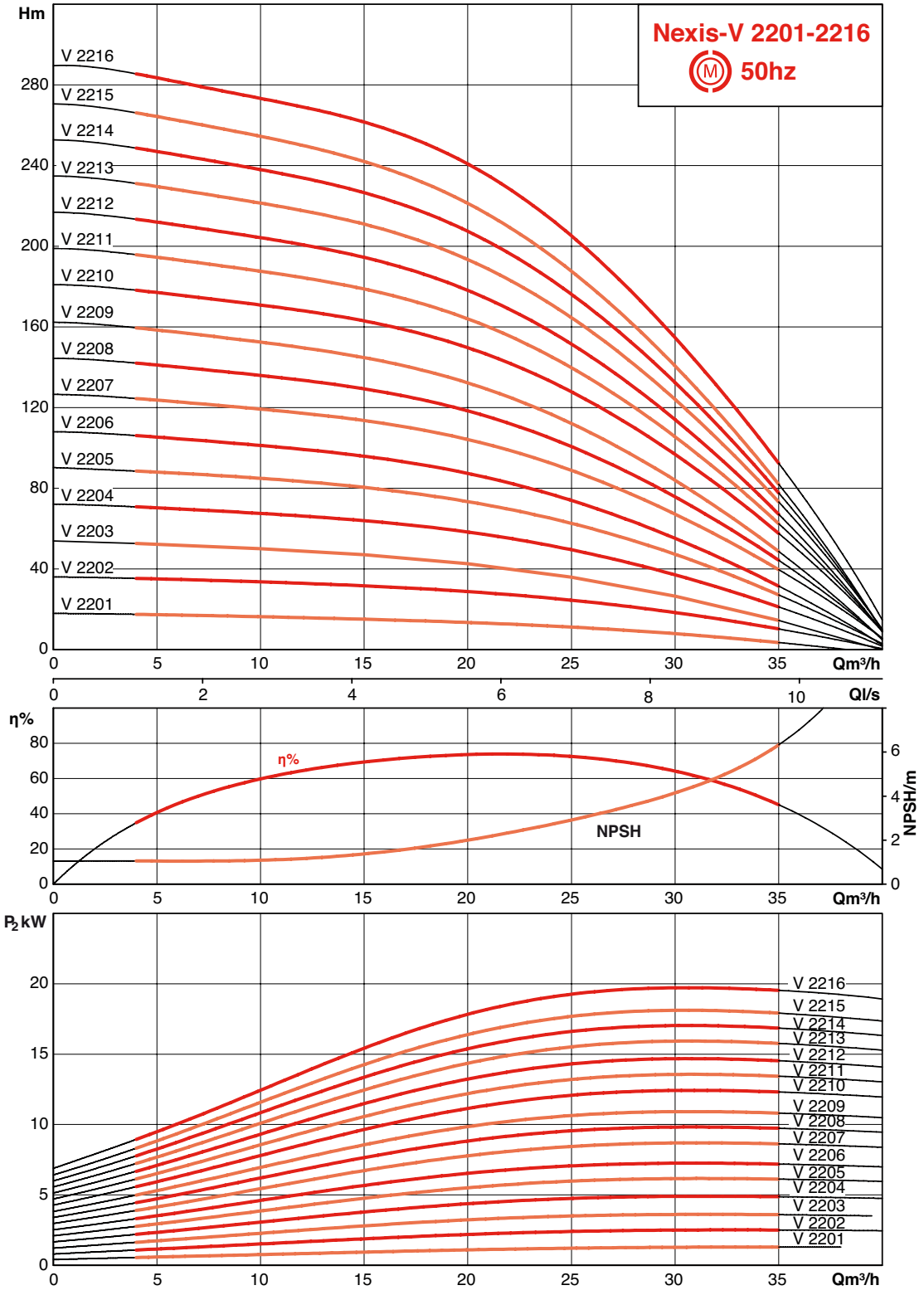

HYDRAULIC PERFORMANCES AT REAL SPEED (AROUND 2900 RPM) - NEXIS V36

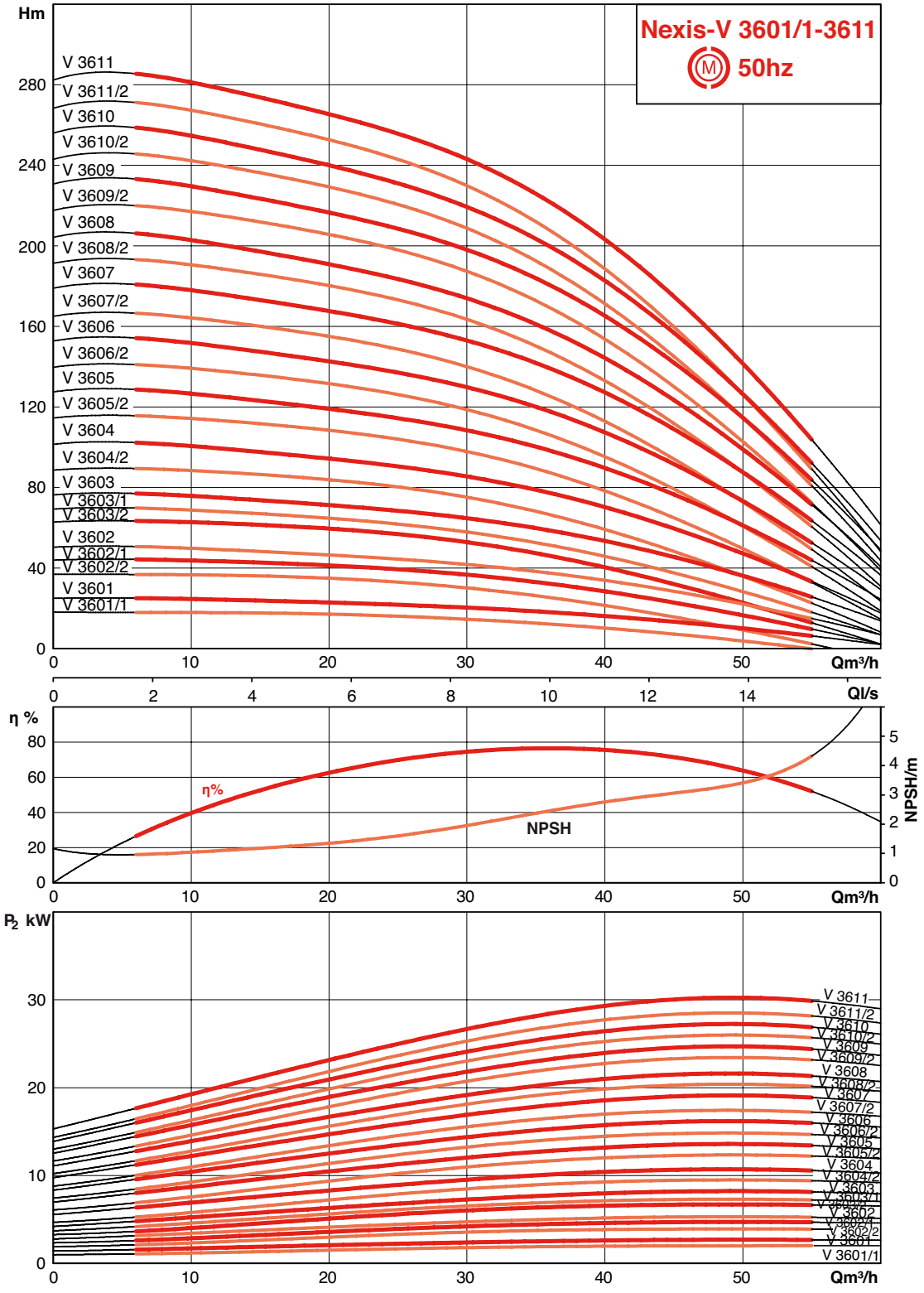

NEXIS V22/36/52

HYDRAULIC PERFORMANCES AT REAL SPEED (AROUND 2900 RPM) - NEXIS V52

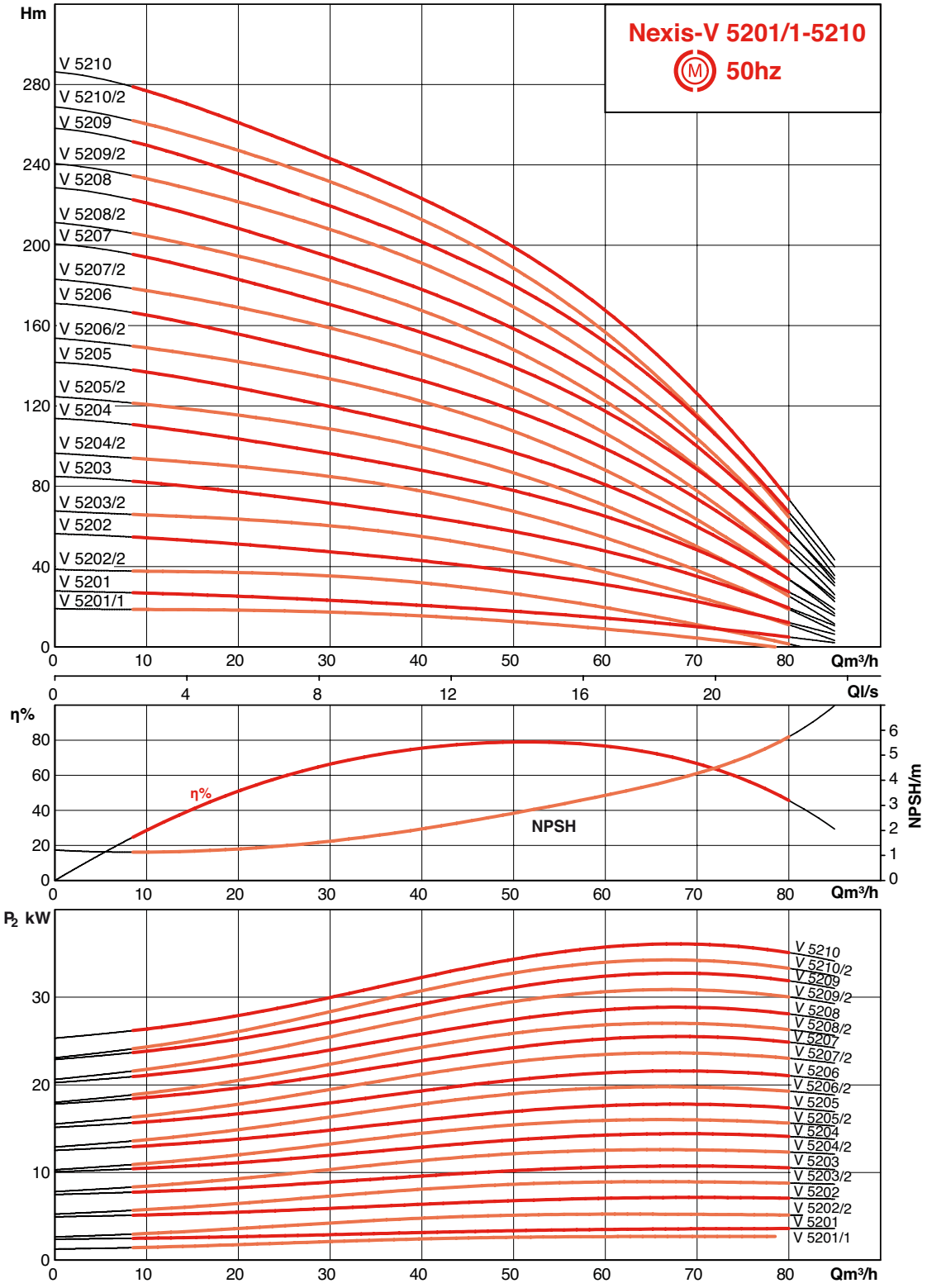

ELECTRICAL AND DIMENSIONAL SPECIFICATIONS NEXIS V2200

• PN16/25/40 - 2 Pole - DN 50

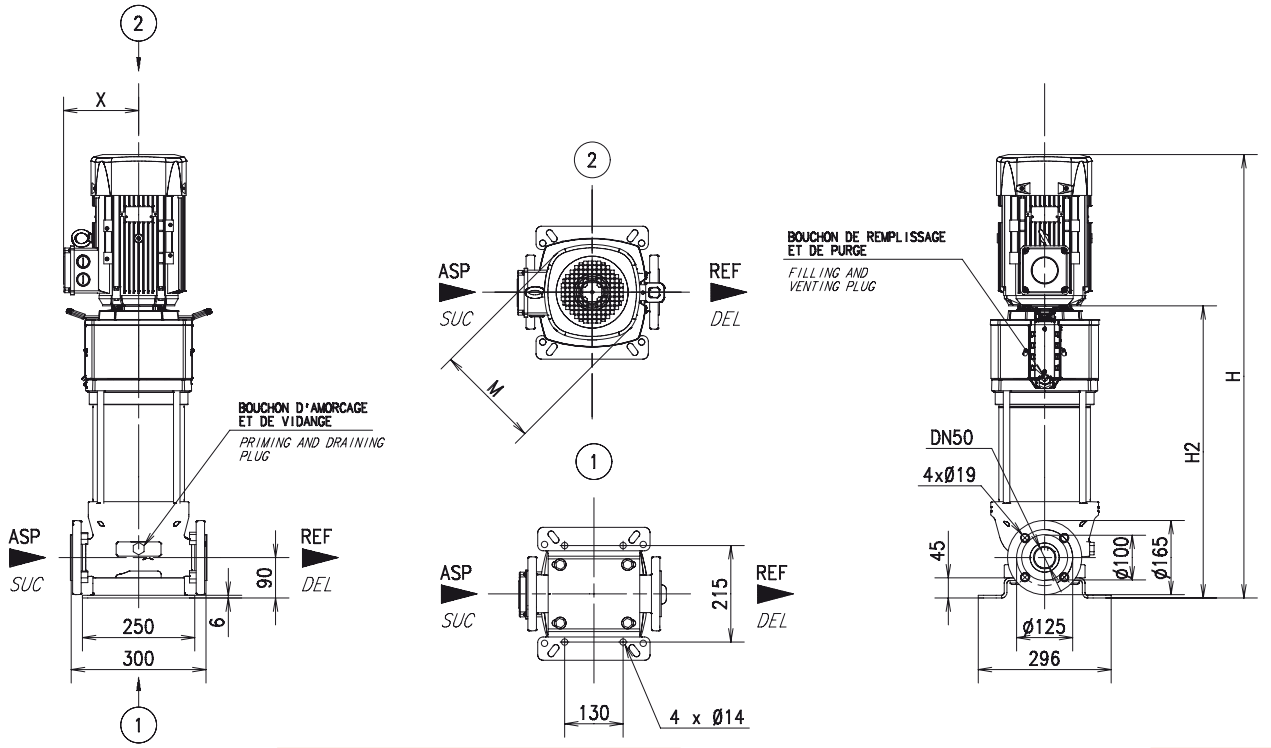

ORDER REFERENCE	MOTOR							PUMP					MASS (kg)	
	P2	Efficiency according to load (%)			Max. current (A)		Noise level	P max	H	H2	ØM	X	without packaging	with packaging
	kW	4/4	3/4	2/4	230 V	400V	dB(A)	bar	mm	mm	mm	mm		
NEXIS V2201-OGE/K/400-50	1.5	81.3	81.3	80	5.7	3,3	58	16	820	541	184	149	60	74
NEXIS V2201-OXV/K/400-50	1.5	81.3	81.3	80	5.7	3,3	58	16	820	541	184	149	60	74
NEXIS V2202-OGE/K/400-50	3	84.6	85	82.5	11.6	6,7	63	16	868	551	194	170	74	88
NEXIS V2202-OXV/K/400-50	3	84.6	85	82.5	11.6	6,7	63	16	868	551	194	170	74	88
NEXIS V2202-ODE/S/400-50	3	84.6	85	82.5	11.6	6,7	63	16	750	433	194	170	63	77
NEXIS V2203-OGE/K/400-50	4	85.8	85.8	85	13.5	7,8	68	16	950	601	218	175	81	100
NEXIS V2203-OXV/K/400-50	4	85.8	85.8	85	13.5	7,8	68	16	950	601	218	175	81	100
NEXIS V2203-ODE/S/400-50	4	85.8	85.8	85	13.5	7,8	68	16	832	483	218	175	76	90
NEXIS V2204-FGE/K/400-50	5.5	88.1	86.9	85.2		10,7	69	25	978	651	232	160	87	109
NEXIS V2204-FXV/K/400-50	5.5	88.1	86.9	85.2		10,7	69	25	978	651	232	160	87	109
NEXIS V2204-OGE/K/400-50	5.5	88.1	86.9	85.2		10,7	69	16	978	651	232	160	87	109
NEXIS V2204-OXV/K/400-50	5.5	88.1	86.9	85.2		10,7	69	16	978	651	232	160	87	109
NEXIS V2204-ODE/S/400-50	5.5	88.1	86.9	85.2		10,7	69	16	861	533	232	160	81	100
NEXIS V2205-FGE/K/400-50	7.5	89.5	89.9	88.5		14	69	25	1212	817	220	160	114	136
NEXIS V2205-FXV/K/400-50	7.5	89.5	89.9	88.5		14	69	25	1212	817	220	160	114	136
NEXIS V2205-OGE/K/400-50	7.5	89.5	89.9	88.5		14	69	16	1212	817	220	160	114	136
NEXIS V2205-OXV/K/400-50	7.5	89.5	89.9	88.5		14	69	16	1212	817	220	160	114	136
NEXIS V2206-FGE/K/400-50	7.5	89.5	89.9	88.5		14	69	25	1262	867	220	160	116	138
NEXIS V2206-FXV/K/400-50	7.5	89.5	89.9	88.5		14	69	25	1262	867	220	160	116	138
NEXIS V2206-OGE/K/400-50	7.5	89.5	89.9	88.5		14	69	16	1262	867	220	160	116	138
NEXIS V2206-OXV/K/400-50	7.5	89.5	89.9	88.5		14	69	16	1262	867	220	160	116	138
NEXIS V2207-FGE/K/400-50	9	88.8	88.4	86.6		16,3	70	25	1312	917	279	182	123	145

NEXIS V22/36/52

ELECTRICAL AND DIMENSIONAL SPECIFICATIONS NEXIS-V2200

• PN16/25/40 - 2 Pole - DN 50

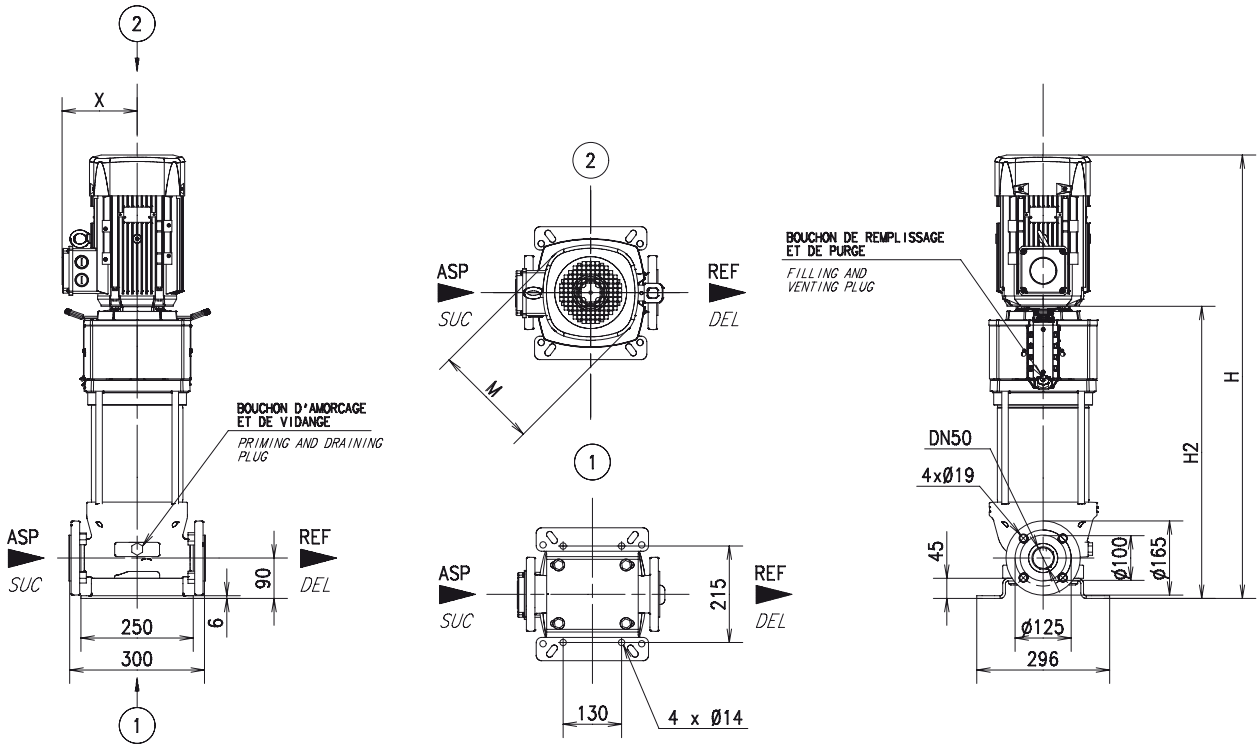

ORDER REFERENCE	MOTOR							PUMP					MASS (kg)	
	P2	Efficiency according to load (%)			Max. current (A)		Noise level	P max	H	H2	ØM	X	without packaging	with packaging
	kW	4/4	3/4	2/4	230 V	400V	dB(A)	bar	mm	mm	mm	mm		
NEXIS V2207-FXV/K/400-50	9	88.8	88.4	86.6		16,3	70	25	1312	917	279	182	123	145
NEXIS V2207-OGE/K/400-50	9	88.8	88.4	86.6		16,3	70	16	1312	917	279	182	123	145
NEXIS V2207-OXV/K/400-50	9	88.8	88.4	86.6		16,3	70	16	1312	917	279	182	123	145
NEXIS V2208-FGE/K/400-50	11	89.4	89.3	87.5		19,4	71	25	1473	997	323	200	156	206
NEXIS V2208-FXV/K/400-50	11	89.4	89.3	87.5		19,4	71	25	1473	997	323	200	156	206
NEXIS V2208-OGE/K/400-50	11	89.4	89.3	87.5		19,4	71	16	1473	997	323	200	156	206
NEXIS V2208-OXV/K/400-50	11	89.4	89.3	87.5		19,4	71	16	1473	997	323	200	156	206
NEXIS V2209-FGE/K/400-50	11	89.4	89.3	87.5		19,4	71	25	1523	1047	323	200	158	208
NEXIS V2209-FXV/K/400-50	11	89.4	89.3	87.5		19,4	71	25	1523	1047	323	200	158	208
NEXIS V2210-FGE/K/400-50	15	90.3	90.2	88.4		25,7	71	25	1573	1097	323	200	171	221
NEXIS V2210-FXV/K/400-50	15	90.3	90.2	88.4		25,7	71	25	1573	1097	323	200	171	221
NEXIS V2211-FGE/K/400-50	15	90.3	90.2	88.4		25,7	71	25	1623	1147	323	200	173	223
NEXIS V2211-FXV/K/400-50	15	90.3	90.2	88.4		25,7	71	25	1623	1147	323	200	173	223
NEXIS V2212-FGE/K/400-50	15	90.3	90.2	88.4		25,7	71	25	1673	1197	323	200	175	225
NEXIS V2212-FXV/K/400-50	15	90.3	90.2	88.4		25,7	71	25	1673	1197	323	200	175	225
NEXIS V2213-FGE/K/400-50	18.5	90.9	90.8	89		31,4	71	25	1723	1247	323	200	187	237
NEXIS V2213-FXV/K/400-50	18.5	90.9	90.8	89		31,4	71	25	1723	1247	323	200	187	237
NEXIS V2214-TGE/K/400-50	18.5	90.9	90.8	89		31,4	71	30	1773	1297	323	200	191	241
NEXIS V2214-TXV/K/400-50	18.5	90.9	90.8	89		31,4	71	30	1773	1297	323	200	191	241
NEXIS V2215-TGE/K/400-50	18.5	90.9	90.8	89		31,4	71	30	1823	1347	323	200	194	244
NEXIS V2215-TXV/K/400-50	18.5	90.9	90.8	89		31,4	71	30	1823	1347	323	200	194	244
NEXIS V2216-TGE/K/400-50	22	91.3	91.9	91		39,2		30	1872	1397	323	200	221	271
NEXIS V2216-TXV/K/400-50	22	91.3	91.9	91		39,2		30	1872	1397	323	200	221	271

ELECTRICAL AND DIMENSIONAL SPECIFICATIONS NEXIS-V2200 MONOBLOC

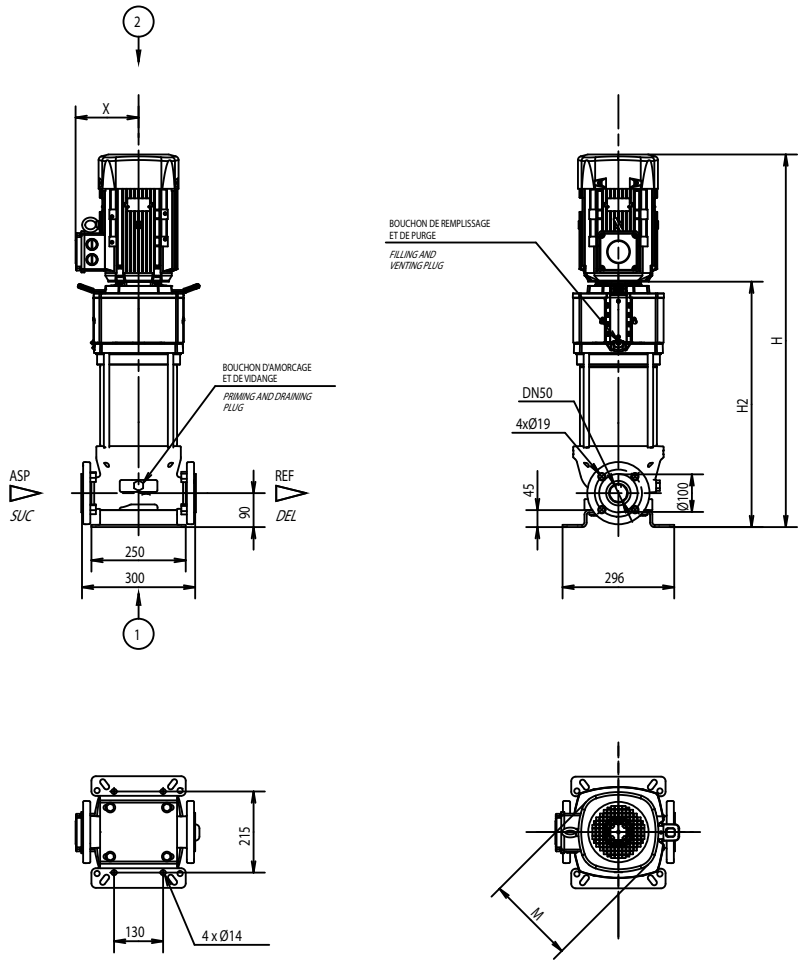

ORDER REFERENCE	MOTOR							PUMP					MASS (kg)	
	P2	Efficiency according to load (%)			Max. current (A)		Noise level	P max	H	H2	ØM	X	without packaging	with packaging
	kW	4/4	3/4	2/4	230 V	400V	dB(A)	bar	mm	mm	mm	mm		
NEXIS V2202-ODE/S/400-50	3	84.6	85	82.5	11.6	6,7	63	16	750	433	194	170	63	77
NEXIS V2203-ODE/S/400-50	4	85.8	85.8	85	13.5	7,8	68	16	832	483	218	175	76	90
NEXIS V2204-ODE/S/400-50	5.5	88.1	86.9	85.2		10,7	69	16	861	533	232	160	81	100
NEXIS V2205-ODE/S/400-50-FF240	7.5	89.5	89.9	88.5		14	69	16	998	603	220	160	95	114
NEXIS V2206-ODE/S/400-50-FF240	7.5	89.5	89.9	88.5		14	69	16	1048	653	220	160	96	115
NEXIS V2207-ODE/S/400-50-FF240	9	88.8	88.4	86.6		16,3	70	16	1098	703	279	182	109	131
NEXIS V2208-ODE/S/400-50-FF240	11	89.4	89.3	87.5		20,2	71	16	1148	753	279	182	144	166

NEXIS V22/36/52

ELECTRICAL AND DIMENSIONAL SPECIFICATIONS NEXIS V3600

• PN16/25/40 - 2 Pole - DN 65

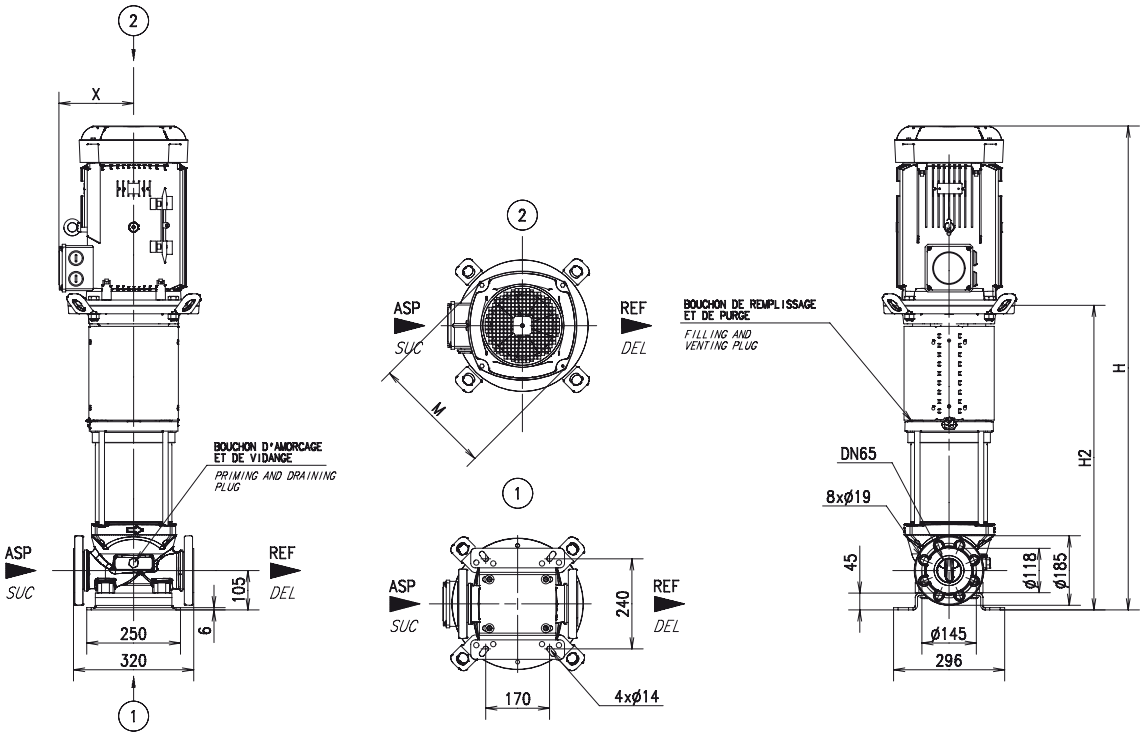

ORDER REFERENCE	MOTOR							PUMP					MASS (kg)	
	P2	Efficiency according to load (%)			Max. current (A)		Noise level	P max	H	H2	ØM	X	without packaging	with packaging
	kW	4/4	3/4	2/4	230 V	400V	dB(A)	bar	mm	mm	mm	mm		
NEXIS V3601/1-OGE/K/400-50	2.2	83.2	83.2	82	8	4,6	62	16	801	522	184	149	71	85
NEXIS V3601/1-OXV/K/400-50	2.2	83.2	83.2	82	8	4,6	62	16	801	522	184	149	71	85
NEXIS V3601-OGE/K/400-50	3	84.6	85	82.5	11.6	6,7	63	16	849	532	194	170	82	96
NEXIS V3601-OXV/K/400-50	3	84.6	85	82.5	11.6	6,7	63	16	849	532	194	170	82	96
NEXIS V3602/1-OGE/K/400-50	5.5	88.1	86.9	85.2		10,7	69	16	926	599	232	160	95	114
NEXIS V3602/1-OXV/K/400-50	5.5	88.1	86.9	85.2		10,7	69	16	926	599	232	160	95	114
NEXIS V3602/2-OGE/K/400-50	4	85.8	85.8	85	13.5	7,8	68	16	948	599	218	175	90	109
NEXIS V3602/2-OXV/K/400-50	4	85.8	85.8	85	13.5	7,8	68	16	948	599	218	175	90	109
NEXIS V3602-OGE/K/400-50	5.5	88.1	86.9	85.2		10,7	69	16	926	599	232	160	95	114
NEXIS V3602-OXV/K/400-50	5.5	88.1	86.9	85.2		10,7	69	16	926	599	232	160	95	114
NEXIS V3603/1-FGE/K/400-50	7.5	89.5	89.9	88.5		14	69	25	1177	782	220	160	125	145
NEXIS V3603/1-FXV/K/400-50	7.5	89.5	89.9	88.5		14	69	25	1177	782	220	160	125	145
NEXIS V3603/1-OGE/K/400-50	7.5	89.5	89.9	88.5		14	69	16	1177	782	220	160	125	145
NEXIS V3603/1-OXV/K/400-50	7.5	89.5	89.9	88.5		14	69	16	1177	782	220	160	125	145
NEXIS V3603/2-FGE/K/400-50	7.5	89.5	89.9	88.5		14	69	25	1177	782	220	160	125	145
NEXIS V3603/2-FXV/K/400-50	7.5	89.5	89.9	88.5		14	69	25	1177	782	220	160	125	145
NEXIS V3603/2-OGE/K/400-50	7.5	89.5	89.9	88.5		14	69	16	1177	782	220	160	125	145
NEXIS V3603/2-OXV/K/400-50	7.5	89.5	89.9	88.5		14	69	16	1177	782	220	160	125	145
NEXIS V3603-FGE/K/400-50	9	88.8	88.4	86.6		16,3	70	25	1177	782	279	182	130	150
NEXIS V3603-FXV/K/400-50	9	88.8	88.4	86.6		16,3	70	25	1177	782	279	182	130	150
NEXIS V3603-OGE/K/400-50	9	88.8	88.4	86.6		16,3	70	16	1177	782	279	182	130	150
NEXIS V3603-OXV/K/400-50	9	88.8	88.4	86.6		16,3	70	16	1177	782	279	182	130	150
NEXIS V3604/2-FGE/K/400-50	11	89.4	89.3	87.5		19,4	71	25	1354	878	323	200	165	185
NEXIS V3604/2-FXV/K/400-50	11	89.4	89.3	87.5		19,4	71	25	1354	878	323	200	165	185
NEXIS V3604/2-OGE/K/400-50	11	89.4	89.3	87.5		19,4	71	16	1354	878	323	200	165	185
NEXIS V3604/2-OXV/K/400-50	11	89.4	89.3	87.5		19,4	71	16	1354	878	323	200	165	185
NEXIS V3604-FGE/K/400-50	11	89.4	89.3	87.5		19,4	71	25	1354	878	323	200	165	185
NEXIS V3604-FXV/K/400-50	11	89.4	89.3	87.5		19,4	71	25	1354	878	323	200	165	185
NEXIS V3604-OGE/K/400-50	11	89.4	89.3	87.5		19,4	71	16	1354	878	323	200	165	185
NEXIS V3604-OXV/K/400-50	11	89.4	89.3	87.5		19,4	71	16	1354	878	323	200	165	185
NEXIS V3605/2-FGE/K/400-50	15	90.3	90.2	88.4		25,7	71	25	1421	945	323	200	185	205
NEXIS V3605/2-FXV/K/400-50	15	90.3	90.2	88.4		25,7	71	25	1421	945	323	200	185	205
NEXIS V3605/2-OGE/K/400-50	15	90.3	90.2	88.4		25,7	71	16	1421	945	323	200	185	205
NEXIS V3605/2-OXV/K/400-50	15	90.3	90.2	88.4		25,7	71	16	1421	945	323	200	185	205

ELECTRICAL AND DIMENSIONAL SPECIFICATIONS NEXIS V3600

• PN16/25/40 - 2 Pole - DN 65

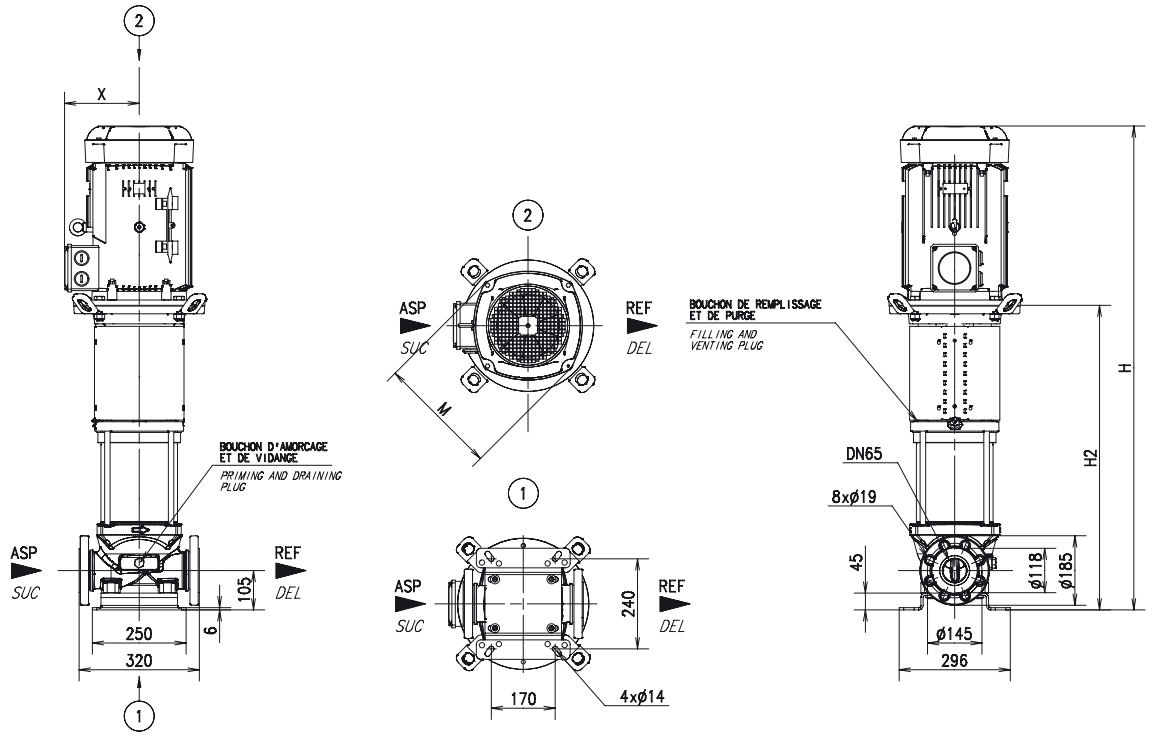

ORDER REFERENCE	MOTOR P2	Efficiency according to load (%)			Max. current (A)		Noise level	PUMP P max	H	H2	ØM	X	MASS (kg) without packaging	MASS (kg) with packaging
	kW	4/4	3/4	2/4	230 V	400V	dB(A)	bar	mm	mm	mm	mm		
NEXIS V3605-FGE/K/400-50	15	90.3	90.2	88.4		25,7	71	25	1421	945	323	200	185	205
NEXIS V3605-FXV/K/400-50	15	90.3	90.2	88.4		25,7	71	25	1421	945	323	200	185	205
NEXIS V3605-OGE/K/400-50	15	90.3	90.2	88.4		25,7	71	16	1421	945	323	200	185	205
NEXIS V3605-OXV/K/400-50	15	90.3	90.2	88.4		25,7	71	16	1421	945	323	200	185	205
NEXIS V3606/2-FGE/K/400-50	15	90.3	90.2	88.4		25,7	71	25	1488	1012	323	200	189	231
NEXIS V3606/2-FXV/K/400-50	15	90.3	90.2	88.4		25,7	71	25	1488	1012	323	200	189	231
NEXIS V3606/2-OGE/K/400-50	15	90.3	90.2	88.4		25,7	71	16	1488	1012	323	200	189	231
NEXIS V3606/2-OXV/K/400-50	15	90.3	90.2	88.4		25,7	71	16	1488	1012	323	200	189	231
NEXIS V3606-FGE/K/400-50	18.5	90.9	90.8	89		31,4	71	25	1488	1012	323	200	192	234
NEXIS V3606-FXV/K/400-50	18.5	90.9	90.8	89		31,4	71	25	1488	1012	323	200	192	234
NEXIS V3606-OGE/K/400-50	18.5	90.9	90.8	89		31,4	71	16	1488	1012	323	200	192	234
NEXIS V3606-OXV/K/400-50	18.5	90.9	90.8	89		31,4	71	16	1488	1012	323	200	192	234
NEXIS V3607/2-FGE/K/400-50	18.5	90.9	90.8	89		31,4	71	25	1554	1078	323	200	195	237
NEXIS V3607/2-FXV/K/400-50	18.5	90.9	90.8	89		31,4	71	25	1554	1078	323	200	195	237
NEXIS V3607-FGE/K/400-50	22	91.3	91.9	91		39,2		25	1554	1078	323	200	218	268
NEXIS V3607-FXV/K/400-50	22	91.3	91.9	91		39,2		25	1554	1078	323	200	218	268
NEXIS V3608/2-FGE/K/400-50	22	91.3	91.9	91		39,2		25	1621	1145	323	200	221	271
NEXIS V3608/2-FXV/K/400-50	22	91.3	91.9	91		39,2		25	1621	1145	323	200	221	271
NEXIS V3608-FGE/K/400-50	22	91.3	91.9	91		39,2		25	1621	1145	323	200	221	271
NEXIS V3608-FXV/K/400-50	22	91.3	91.9	91		39,2		25	1621	1145	323	200	221	271
NEXIS V3609/2-FGE/K/400-50	30	92	91.8	90.3		55,1	75	25	1767	1212	415	261	267	309
NEXIS V3609/2-FXV/K/400-50	30	92	91.8	90.3		55,1	75	25	1767	1212	415	261	267	309
NEXIS V3609-FGE/K/400-50	30	92	91.8	90.3		55,1	75	25	1767	1212	415	261	267	309
NEXIS V3609-FXV/K/400-50	30	92	91.8	90.3		55,1	75	25	1767	1212	415	261	267	309
NEXIS V3610-TGE/K/400-50	30	92	91.8	90.3		55,1	75	30	1833	1278	415	261	272	314
NEXIS V3610-TXV/K/400-50	30	92	91.8	90.3		55,1	75	30	1833	1278	415	261	272	314
NEXIS V3611/2-TGE/K/400-50	30	92	91.8	90.3		55,1	75	30	1900	1345	415	261	276	330
NEXIS V3611/2-TXV/K/400-50	30	92	91.8	90.3		55,1	75	30	1900	1345	415	261	276	330
NEXIS V3611-TGE/K/400-50	37	92.5	91.9	90.1		70	75	30	1900	1345	415	261	296	350
NEXIS V3611-TXV/K/400-50	37	92.5	91.9	90.1		70	75	30	1900	1345	415	261	296	350

NEXIS V22/36/52

ELECTRICAL AND DIMENSIONAL SPECIFICATIONS NEXIS V3600 MONOBLOC

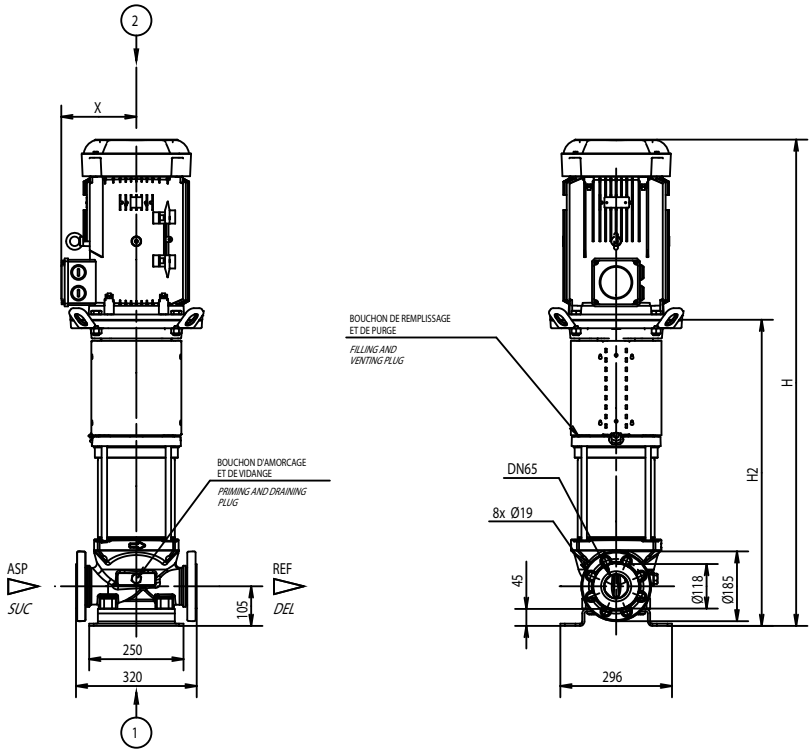

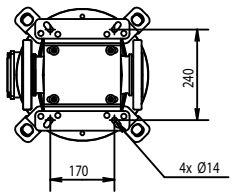

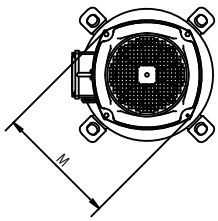

ORDER REFERENCE	MOTOR							PUMP					MASS (kg)	
	P2	Efficiency according to load (%)			Max. current (A)		Noise level	P max	H	H2	ØM	X	without packaging	with packaging
	kW	4/4	3/4	2/4	230 V	400V	dB(A)	bar	mm	mm	mm	mm		
NEXIS V3602/2-ODE/S/400-50	4	85.8	85.8	85	13.5	7,8	68	16	835	486	218	175	81	95
NEXIS V3602-ODE/S/400-50	5.5	88.1	86.9	85.2		10,7	69	16	814	486	232	160	84	98
NEXIS V3603/1-ODE/S/400-50-FF240	7.5	89.5	89.9	88.5		14	69	16	968	573	220	160	99	118
NEXIS V3603-ODE/S/400-50-FF240	9	88.8	88.4	86.6		16,3	70	16	968	573	279	182	109	128
NEXIS V3604/2-ODE/S/400-50-FF240	11	89.4	89.3	87.5		20,2	71	16	1034	639	279	182	146	165
NEXIS V3604-ODE/S/400-50-FF240	11	89.4	89.3	87.5		20,2	71	16	1034	639	279	182	146	165
NEXIS V3605/2-ODE/KS/400-50	15	90.3	90.2	88.4		25,7	71	16	1361	885	323	200	178	200
NEXIS V3605-ODE/KS/400-50	15	90.3	90.2	88.4		25,7	71	16	1361	885	323	200	178	200
NEXIS V3606/2-ODE/KS/400-50	15	90.3	90.2	88.4		25,7	71	16	148	952	323	200	181	203
NEXIS V3606-ODE/KS/400-50	18.5	90.9	90.8	89		31,4	71	16	1428	952	323	200	194	216

ELECTRICAL AND DIMENSIONAL SPECIFICATIONS NEXIS V5200

• PN16/25/40 - 2 Pole - DN 80

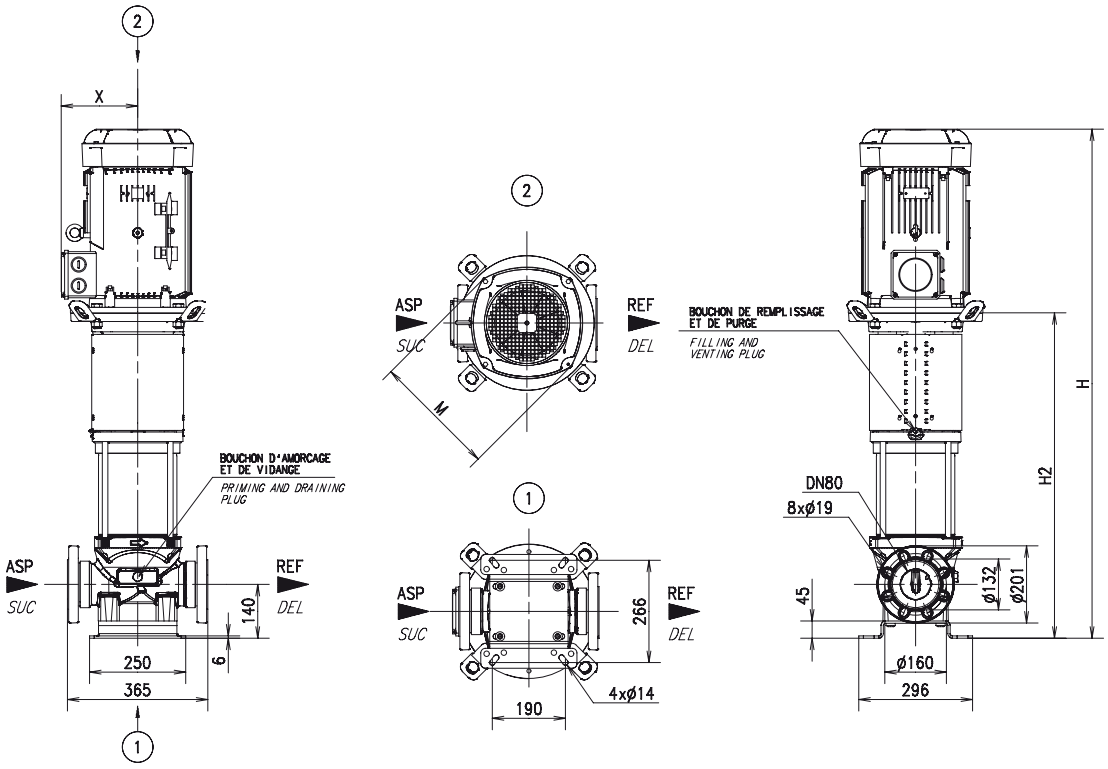

ORDER REFERENCE	MOTOR							PUMP					MASS (kg)	
	P2	Efficiency according to load (%)			Max. current (A)		Noise level	P max	H	H2	ØM	X	without packaging	with packaging
	kW	4/4	3/4	2/4	230 V	400V	dB(A)	bar	mm	mm	mm	mm		
NEXIS V5201/1-OGE/K/400-50	3	84.6	85	82.5	11.6	6,7	63	16	884	567	194	170	94	108
NEXIS V5201/1-OXV/K/400-50	3	84.6	85	82.5	11.6	6,7	63	16	884	567	194	170	94	108
NEXIS V5201-OGE/K/400-50	4	85.8	85.8	85	13.5	7,8	68	16	916	567	218	175	98	112
NEXIS V5201-OXV/K/400-50	4	85.8	85.8	85	13.5	7,8	68	16	916	567	218	175	98	112
NEXIS V5202/2-OGE/K/400-50	5.5	88.1	86.9	85.2		10,7	69	16	995	667	232	160	108	130
NEXIS V5202/2-OXV/K/400-50	5.5	88.1	86.9	85.2		10,7	69	16	995	667	232	160	108	130
NEXIS V5202-OGE/K/400-50	7.5	89.5	89.9	88.5		14	69	16	1178	783	220	160	134	155
NEXIS V5202-OXV/K/400-50	7.5	89.5	89.9	88.5		14	69	16	1178	783	220	160	134	156
NEXIS V5203/2-FGE/K/400-50	11	89.4	89.3	87.5		19,4	71	25	1389	913	323	200	176	198
NEXIS V5203/2-FXV/K/400-50	11	89.4	89.3	87.5		19,4	71	25	1389	913	323	200	176	198
NEXIS V5203/2-OGE/K/400-50	11	89.4	89.3	87.5		19,4	71	16	1389	913	323	200	176	198
NEXIS V5203/2-OXV/K/400-50	11	89.4	89.3	87.5		19,4	71	16	1389	913	323	200	176	198
NEXIS V5203-FGE/K/400-50	11	89.4	89.3	87.5		19,4	71	25	1389	913	323	200	176	198
NEXIS V5203-FXV/K/400-50	11	89.4	89.3	87.5		19,4	71	25	1389	913	323	200	176	198
NEXIS V5203-OGE/K/400-50	11	89.4	89.3	87.5		19,4	71	16	1389	913	323	200	176	198
NEXIS V5203-OXV/K/400-50	11	89.4	89.3	87.5		19,4	71	16	1389	913	323	200	176	198
NEXIS V5204/2-FGE/K/400-50	15	90.3	90.2	88.4		25,7	71	25	1489	1013	323	200	197	245
NEXIS V5204/2-FXV/K/400-50	15	90.3	90.2	88.4		25,7	71	25	1489	1013	323	200	197	245
NEXIS V5204/2-OGE/K/400-50	15	90.3	90.2	88.4		25,7	71	16	1489	1013	323	200	197	245
NEXIS V5204/2-OXV/K/400-50	15	90.3	90.2	88.4		25,7	71	16	1489	1013	323	200	197	245
NEXIS V5204-FGE/K/400-50	15	90.3	90.2	88.4		25,7	71	25	1489	1013	323	200	197	245
NEXIS V5204-FXV/K/400-50	15	90.3	90.2	88.4		25,7	71	25	1489	1013	323	200	197	245
NEXIS V5204-OGE/K/400-50	15	90.3	90.2	88.4		25,7	71	16	1489	1013	323	200	197	245
NEXIS V5204-OXV/K/400-50	15	90.3	90.2	88.4		25,7	71	16	1489	1013	323	200	197	245
NEXIS V5205/2-FGE/K/400-50	18.5	90.9	90.8	89		31,4	71	25	1589	1113	323	200	207	255
NEXIS V5205/2-FXV/K/400-50	18.5	90.9	90.8	89		31,4	71	25	1589	1113	323	200	207	255
NEXIS V5205/2-OGE/K/400-50	18.5	90.9	90.8	89		31,4	71	16	1589	1113	323	200	207	255
NEXIS V5205/2-OXV/K/400-50	18.5	90.9	90.8	89		31,4	71	16	1589	1113	323	200	207	255

NEXIS V22/36/52

ELECTRICAL AND DIMENSIONAL SPECIFICATIONS NEXIS V5200

• PN16/25/40 - 2 Pole - DN 80

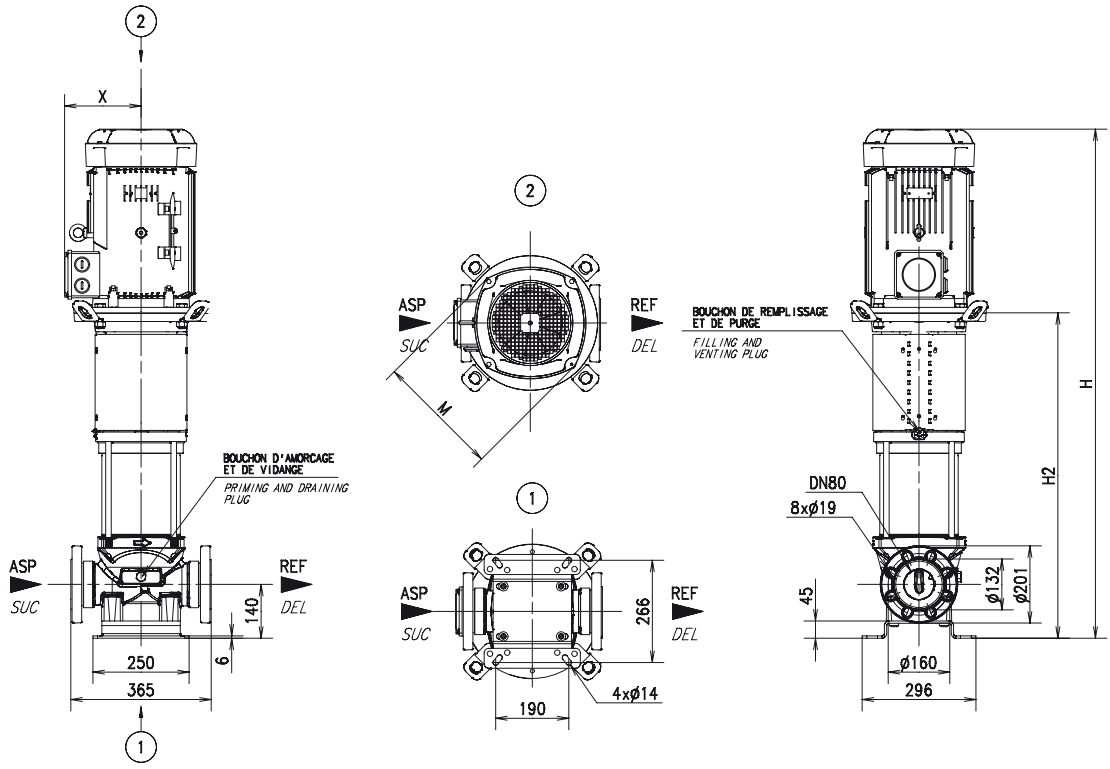

ORDER REFERENCE	MOTOR							PUMP					MASS (kg)	
	P2	Efficiency according to load (%)			Max. current (A)		Noise level	P max	H	H2	ØM	X	without packaging	with packaging
	kW	4/4	3/4	2/4	230 V	400V	dB(A)	bar	mm	mm	mm	mm		
NEXIS V5205-FGE/K/400-50	18.5	90.9	90.8	89		31,4	71	25	1589	1113	323	200	207	255
NEXIS V5205-FXV/K/400-50	18.5	90.9	90.8	89		31,4	71	25	1589	1113	323	200	207	255
NEXIS V5205-OGE/K/400-50	18.5	90.9	90.8	89		31,4	71	16	1589	1113	323	200	207	255
NEXIS V5205-OXV/K/400-50	18.5	90.9	90.8	89		31,4	71	16	1589	1113	323	200	207	255
NEXIS V5206/2-FGE/K/400-50	22	91.3	91.9	91		39,2		25	1689	1213	323	200	231	281
NEXIS V5206/2-FXV/K/400-50	22	91.3	91.9	91		39,2		25	1689	1213	323	200	231	281
NEXIS V5206/2-OGE/K/400-50	22	91.3	91.9	91		39,2		16	1689	1213	323	200	231	281
NEXIS V5206/2-OXV/K/400-50	22	91.3	91.9	91		39,2		16	1689	1213	323	200	231	281
NEXIS V5206-FGE/K/400-50	22	91.3	91.9	91		39,2		25	1689	1213	323	200	231	281
NEXIS V5206-FXV/K/400-50	22	91.3	91.9	91		39,2		25	1689	1213	323	200	231	281
NEXIS V5207/2-FGE/K/400-50	30	92	91.8	90.3		55,1	75	25	1868	1313	415	261	278	326
NEXIS V5207/2-FXV/K/400-50	30	92	91.8	90.3		55,1	75	25	1868	1313	415	261	278	326
NEXIS V5207-FGE/K/400-50	30	92	91.8	90.3		55,1	75	25	1868	1313	415	261	278	326
NEXIS V5207-FXV/K/400-50	30	92	91.8	90.3		55,1	75	25	1868	1313	415	261	278	326
NEXIS V5208/2-FGE/K/400-50	30	92	91.8	90.3		55,1	75	25	1968	1413	415	261	282	332
NEXIS V5208/2-FXV/K/400-50	30	92	91.8	90.3		55,1	75	25	1968	1413	415	261	282	332
NEXIS V5208-FGE/K/400-50	30	92	91.8	90.3		55,1	75	25	1968	1413	415	261	282	332
NEXIS V5208-FXV/K/400-50	30	92	91.8	90.3		55,1	75	25	1968	1413	415	261	282	332
NEXIS V5209/2-FGE/K/400-50	37	92.5	91.9	90.1		70	75	25	2068	1513	415	261	307	357
NEXIS V5209/2-FXV/K/400-50	37	92.5	91.9	90.1		70	75	25	2068	1513	415	261	307	357
NEXIS V5209-TGE/K/400-50	37	92.5	91.9	90.1		70	75	30	2068	1513	415	261	309	359
NEXIS V5209-TXV/K/400-50	37	92.5	91.9	90.1		70	75	30	2068	1513	415	261	309	359
NEXIS V5210/2-TGE/K/400-50	37	92.5	91.9	90.1		70	75	30	2168	1613	415	261	315	365
NEXIS V5210/2-TXV/K/400-50	37	92.5	91.9	90.1		70	75	30	2168	1613	415	261	315	365
NEXIS V5210-TGE/K/400-50	37	92.5	91.9	90.1		70	75	30	2168	1613	415	261	315	365
NEXIS V5210-TXV/K/400-50	37	92.5	91.9	90.1		70	75	30	2168	1613	415	261	315	365

ELECTRICAL AND DIMENSIONAL SPECIFICATIONS NEXIS V5200 MONOBLOC

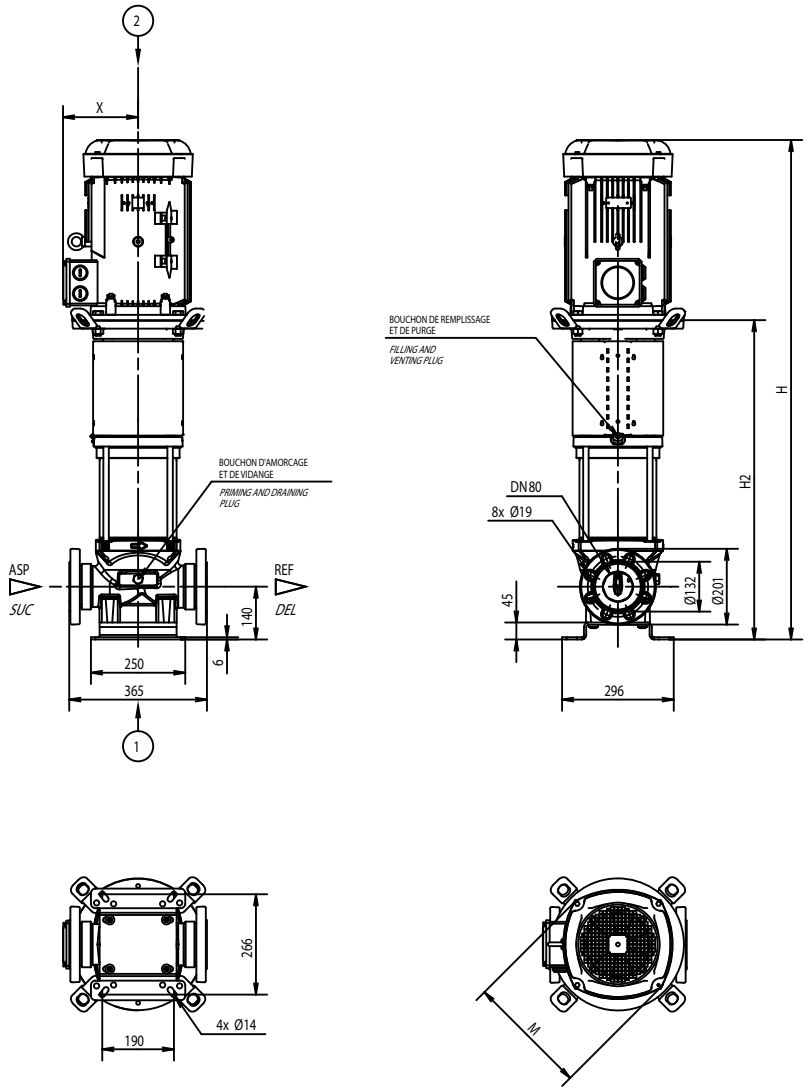

ORDER REFERENCE	MOTOR							PUMP					MASS (kg)	
	P2	Efficiency according to load (%)			Max. current (A)		Noise level	P max	H	H2	ØM	X	without packaging	with packaging
	kW	4/4	3/4	2/4	230 V	400V	dB(A)	bar	mm	mm	mm	mm		
NEXIS V5202/2-ODE/S/400-50	5.5	88.1	86.9	85.2		10,7	69	16	911	583	232	160	95	114
NEXIS V5202-ODE/S/400-50-FF240	7.5	89.5	89.9	88.5		14	69	16	998	603	220	160	107	126
NEXIS V5203/2-ODE/S/400-50-FF240	11	89.4	89.3	87.5		20,2	71	16	1098	703	279	182	155	177
NEXIS V5203-ODE/S/400-50-FF240	11	89.4	89.3	87.5		20,2	71	16	1098	703	279	182	155	177
NEXIS V5204/2-ODE/KS/400-50	15	90.3	90.2	88.4		25,7	71	16	1458	982	323	200	186	236
NEXIS V5204-ODE/KS/400-50	15	90.3	90.2	88.4		25,7	71	16	1458	982	323	200	186	236
NEXIS V5205/2-ODE/KS/400-50	18.5	90.9	90.8	89		31,4	71	16	1558	1082	323	200	203	253
NEXIS V5205-ODE/KS/400-50	18.5	90.9	90.8	89		31,4	71	16	1558	1082	323	200	203	253
NEXIS V5206/2-ODE/KS/400-50	22	91.3	90.9	89.5		37,5	75	16	1658	1182	370	248	224	274

NEXIS V22/36/52

INSTALLATION - DISMANTLING CARTRIDGE : TIGHTENING TORQUES

• Screw type and overview of screwing torque

Pump components		screw type	marking screw	Number	Tightening torque (N.m)
Coupling guard		ST3.9		4	0,7
Coupling	FT115	M8	9903	4	22,5
	FT130 et FF240		9902c		
	FF265		9902J		
	FF300	M12	9902a	4	80
Spacer	FF265	M8	9908	4	22,5
	FF300	M10	9902g	4	45
Shaft end		M8		1	15
Collar		M5		3	4
Cartridge		M6		4	7

MAIN ACCESSORIES

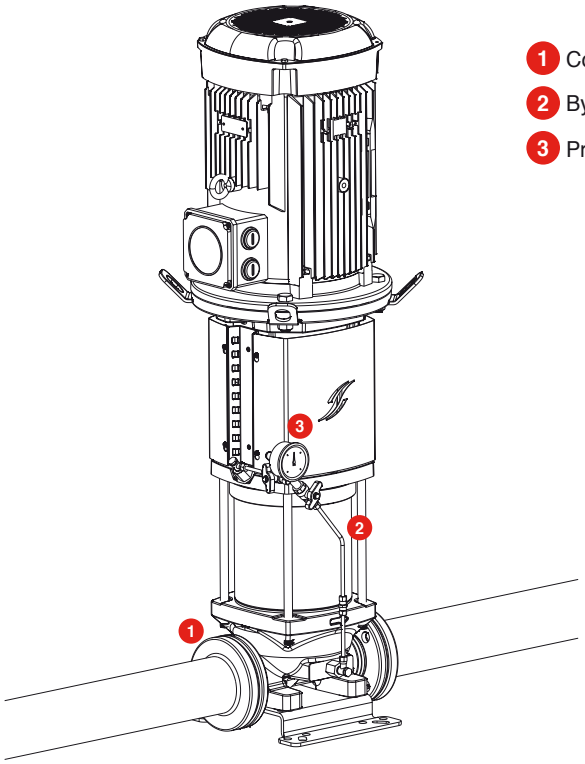

1. Counter flange
2. By-pass kit
3. Pressure sensor

Order reference	Pump type	Designation
4038112	Nexis V2200	2 weld-on Counter flange in steel kit DN50 PN16
4038114	Nexis V2200	2 weld-on Counter flange in steel kit DN50 PN25/40 en acier
4038117	Nexis V3600	2 weld-on Counter flange in steel kit DN65 PN16 en acier
4038119	Nexis V3600	2 weld-on Counter flange in steel kit DN65 PN25/40 en acier
4072533	Nexis V5200	2 weld-on Counter flange in steel kit DN80 PN16 en acier
4072535	Nexis V5200	2 weld-on Counter flange in steel kit DN80 PN25/40 en acier
4038113	Nexis V2200	2 screw-on Counter flange in 316L stainless steel kit DN50 PN16
4038116	Nexis V2200	2 screw-on Counter flange in 316L stainless steel kit DN50 PN25/40 en inox 316L
4038118	Nexis V3600	2 screw-on Counter flange in 316L stainless steel kit DN65 PN16
4038120	Nexis V3600	2 screw-on Counter flange in 316L stainless steel kit DN65 PN25/40
4073796	Nexis V5200	2 screw-on Counter flange in 316L stainless steel kit DN80 PN16
4073798	Nexis V5200	2 screw-on Counter flange in 316L stainless steel kit DN80 PN25/40
4048065	Nexis V2200/3600/5200	16 bar pressure kit in stainless steel
4048066	Nexis V2200/3600/5200	25 bar pressure kit in stainless steel
4124990	Nexis V2200/3600/5200	Nexis 8» by-pass kit 25 bar
4124991	Nexis V2200/3600/5200	Pressure switch and Nexis 8" by-pass kit 25 bar

FEATURES

a) Electrical

- "T" types: 3~ 230-400 V - 50 Hz
or 3~ 400 V Δ above 4 kW.
- Motors MUST be protected by a slave switch.

b) Installation

- On solid base using foundation bolts.
- Installation of pump in suction mode with compulsory strainer foot valve, or flooded suction mode on storage tank or mains water system with low water protection kit.
- Connection to pump by round backflanges for PN 16 and PN25 series.
- The installation must allow for the protection of the pump against adverse weather conditions and frost (avoid direct exposure to rain or sun).

c) Various subject

- **Pump without motor available on request**
- **60 Hz pump on request**
- **Collective packaging available on request**
- **PN16 series / PN 25 series** with round flanges: pump supplied with gaskets and bolts, without backflanges (optional).

d) Maintenance

Replacement of recommended spare parts (•) subject to wear (see sectional diagram).

AUTRES ACCESSOIRES

- Shut-off valves
- Non-return valves
- Strainer foot valve
- Vibration-damping sleeves
- Bladder or galvanised tanks
- Surge tanks
- ME low-water protection kit
- Protective slave switch for motor
- Pressure sensor: 6,10,16,25 bar, etc.